eProjects
Work Order Number(s):
1558046

Appropriation: MCON

120 Man Classrooms

At the

MCB Camp Lejeune, NC

(P-1482)

DESIGNED BY:

NAVFAC MID-ATLANTIC
9742 MARYLAND AVENUE
NORFOLK, VIRGINIA 23511-3095

SPECIFICATION PREPARED BY:

Architectural:	Gyasi Cooke, RA
Civil:	Quy Tran, PE
Structural:	Bimal Shrestha, PE
Mechanical:	Joseph Shillinglaw, EIT
Electrical:	Luis Roman-Lugo
Fire Prot.:	Scott Arnoe, PE
Geotechnical:	Robert Huntoon, PE
Interior Design:	Elizabeth Clemens, CID
Specification:	Gyasi Cooke, RA
Landscape Architecture:	Amy McKay, RLA

Date: June 9, 2020

SPECIFICATION APPROVED BY:

For Commander, NAVFAC MID-ATLANTIC: James E. Donahue, R.A.
Date: June 17, 2020

IFC

THIS PAGE HAS BEEN INTENTIONALLY LEFT BLANK

PROJECT TABLE OF CONTENTS

DIVISION 01 - GENERAL REQUIREMENTS

01 11 00 SUMMARY OF WORK
01 14 00 WORK RESTRICTIONS
01 20 00.00 20 PRICE AND PAYMENT PROCEDURES
01 30 00 ADMINISTRATIVE REQUIREMENTS
01 30 01.00 22 DESIGN, PROCUREMENT, AND INSTALLATION OF FURNITURE, FIXTURES, AND EQUIPMENT
01 31 23.13 20 ELECTRONIC CONSTRUCTION AND FACILITY SUPPORT CONTRACT MANAGEMENT SYSTEM
01 32 17.00 20 NETWORK ANALYSIS SCHEDULES (NAS)
01 33 00 SUBMITTAL PROCEDURES
01 33 29 SUSTAINABILITY REPORTING
01 35 26 GOVERNMENTAL SAFETY REQUIREMENTS
01 45 00.00 20 QUALITY CONTROL
01 45 35 SPECIAL INSPECTIONS
01 50 00 TEMPORARY CONSTRUCTION FACILITIES AND CONTROLS
01 57 19 TEMPORARY ENVIRONMENTAL CONTROLS
01 57 19.01 20 SUPPLEMENTAL TEMPORARY ENVIRONMENTAL CONTROLS
01 58 00 PROJECT IDENTIFICATION
01 60 00.00 22 REQUIREMENTS FOR PESTICIDE AND HERBICIDE COORDINATION
01 74 19 CONSTRUCTION AND DEMOLITION WASTE MANAGEMENT
01 78 00 CLOSEOUT SUBMITTALS
01 78 23 OPERATION AND MAINTENANCE DATA
01 78 24.00 20 FACILITY ELECTRONIC OPERATION AND MAINTENANCE SUPPORT INFORMATION (eOMSI)
01 78 30.00 22 GIS DATA DELIVERABLES
01 91 00.15 22 TOTAL BUILDING COMMISSIONING
01 91 13.00 22 GENERAL COMMISSIONING REQUIREMENTS FOR CONSTRUCTION

DIVISION 03 - CONCRETE

03 30 00 CAST-IN-PLACE CONCRETE
03 42 13.00 10 PLANT-PRECAST CONCRETE PRODUCTS FOR BELOW GRADE CONSTRUCTION

DIVISION 04 - MASONRY

04 20 00 UNIT MASONRY

DIVISION 05 - METALS

05 40 00 COLD-FORMED METAL FRAMING
05 50 13 MISCELLANEOUS METAL FABRICATIONS
05 52 00 METAL RAILINGS

DIVISION 06 - WOOD, PLASTICS, AND COMPOSITES

06 10 00 ROUGH CARPENTRY
06 61 16 SOLID SURFACING FABRICATIONS

DIVISION 07 - THERMAL AND MOISTURE PROTECTION

07 05 23 PRESSURE TESTING AN AIR BARRIER SYSTEM FOR AIR TIGHTNESS
07 11 13 BITUMINOUS DAMPPROOFING
07 15 00.00 22 AIR AND VAPOR BARRIERS
07 21 13 BOARD AND BLOCK INSULATION

07 42 13 METAL WALL PANELS
07 84 00 FIRESTOPPING
07 92 00 JOINT SEALANTS

DIVISION 08 - OPENINGS

08 11 13 STEEL DOORS AND FRAMES
08 41 13 ALUMINUM-FRAMED ENTRANCES AND STOREFRONTS
08 51 13 ALUMINUM WINDOWS
08 71 00 DOOR HARDWARE
08 81 00 GLAZING
08 91 00 METAL WALL LOUVERS

DIVISION 09 - FINISHES

09 22 00 SUPPORTS GYPSUM BOARD
09 29 00 GYPSUM BOARD
09 65 00 RESILIENT FLOORING
09 68 00 CARPETING
09 69 33.00 22 LOW PROFILE ACCESS FLOOR SYSTEM
09 90 00 PAINTS AND COATINGS

DIVISION 10 - SPECIALTIES

10 14 00.10 EXTERIOR SIGNAGE
10 14 00.20 INTERIOR SIGNAGE
10 26 00 WALL AND DOOR PROTECTION

DIVISION 12 - FURNISHINGS

12 24 13 ROLLER WINDOW SHADES
12 48 13 ENTRANCE FLOOR MATS AND FRAMES
12 93 00 SITE FURNISHINGS

DIVISION 13 - SPECIAL CONSTRUCTION

13 34 19 METAL BUILDING SYSTEMS

DIVISION 21 - FIRE SUPPRESSION

21 13 13.00 20 WET PIPE SPRINKLER SYSTEM, FIRE PROTECTION
21 21 00 FIRE EXTINGUISHING SPRINKLER SYSTEMS (RESIDENTIAL)

DIVISION 22 - PLUMBING

22 00 00 PLUMBING, GENERAL PURPOSE
22 05 48.00 20 MECHANICAL SOUND, VIBRATION, AND SEISMIC CONTROL

DIVISION 23 - HEATING, VENTILATING, AND AIR CONDITIONING (HVAC)

23 00 00 AIR SUPPLY, DISTRIBUTION, VENTILATION, AND EXHAUST SYSTEMS
23 03 00.00 20 BASIC MECHANICAL MATERIALS AND METHODS
23 05 93.00 22 TESTING, ADJUSTING, AND BALANCING FOR MECHANICAL SYSTEMS
23 07 00 THERMAL INSULATION FOR MECHANICAL SYSTEMS
23 09 00.00 22 INSTRUMENTATION AND CONTROL FOR HVAC
23 09 13.00 22 INSTRUMENTATION AND CONTROL DEVICES FOR HVAC
23 09 23.02 22 BACNET DIRECT DIGITAL CONTROL FOR HVAC AND OTHER BUILDING CONTROL SYSTEMS
23 23 00 REFRIGERANT PIPING

23 81 00.00 20 UNITARY AIR CONDITIONING EQUIPMENT
23 82 00.00 20 TERMINAL HEATING UNITS

DIVISION 26 - ELECTRICAL

26 00 00.00 20 BASIC ELECTRICAL MATERIALS AND METHODS
26 08 00 APPARATUS INSPECTION AND TESTING
26 12 19.10 THREE-PHASE PAD-MOUNTED TRANSFORMERS
26 20 00 INTERIOR DISTRIBUTION SYSTEM
26 27 14.00 20 ELECTRICITY METERING
26 41 00 LIGHTNING PROTECTION SYSTEM
26 51 00 INTERIOR LIGHTING
26 56 00 EXTERIOR LIGHTING

DIVISION 27 - COMMUNICATIONS

27 10 00 BUILDING TELECOMMUNICATIONS CABLING SYSTEM

DIVISION 28 - ELECTRONIC SAFETY AND SECURITY

28 31 76.00 22 INTERIOR COMBINATION EMERGENCY COMMUNICATIONS SYSTEMS

DIVISION 31 - EARTHWORK

31 05 19 GEOTEXTILE
31 23 00.00 20 EXCAVATION AND FILL
31 31 16.13 CHEMICAL TERMITE CONTROL
31 31 16.19 TERMITE CONTROL BARRIERS

DIVISION 32 - EXTERIOR IMPROVEMENTS

32 05 33 LANDSCAPE ESTABLISHMENT
32 10 00 BITUMINOUS CONCRETE PAVEMENT
32 13 13.06 PORTLAND CEMENT CONCRETE PAVEMENT FOR ROADS AND SITE FACILITIES
32 16 19 CONCRETE CURBS, GUTTERS AND SIDEWALKS
32 17 23 PAVEMENT MARKINGS
32 31 13.53 HIGH-SECURITY CHAIN LINK FENCES AND GATES
32 92 23 SODDING
32 93 00 EXTERIOR PLANTS

DIVISION 33 - UTILITIES

33 11 00 WATER UTILITY DISTRIBUTION PIPING
33 11 23 NATURAL GAS AND LIQUID PETROLEUM PIPING
33 30 00 SANITARY SEWERAGE
33 40 00 STORM DRAINAGE UTILITIES
33 82 00 TELECOMMUNICATIONS OUTSIDE PLANT (OSP)

-- End of Project Table of Contents --

THIS PAGE HAS BEEN INTENTIONALLY LEFT BLANK

SECTION 01 11 00

SUMMARY OF WORK
07/16

PART 1 GENERAL

1.1 REFERENCES

The publications listed below form a part of this specification to the extent referenced. The publications are referred to within the text by the basic designation only.

INTERNATIONAL CODE COUNCIL (ICC)

ICC IBC	(2012) International Building Code

U.S. DEPARTMENT OF DEFENSE (DOD)

UFC 1-200-01	(2013, with Change 3) General Building Requirements

1.2 SUBMITTALS

Government approval is required for submittals with a "G" designation; submittals not having a "G" designation are for Contractor Quality Control approval. Submittals with an "S" are for inclusion in the Sustainability Notebook, in conformance with Section 01 33 29 SUSTAINABILITY REPORTING. Submit the following in accordance with Section 01 33 00 SUBMITTAL PROCEDURES:

SD-01 Preconstruction Submittals

1.3 WORK COVERED BY CONTRACT DOCUMENTS

1.3.1 Project Description

The work includes construction of two PEMB classroom additions to an existing building and incidental related work.

1.3.2 Location

The work is located at the MCB Camp Lejeune, NC, approximately as indicated. The exact location will be shown by the Contracting Officer.

1.4 BUILDING CODE

Except as indicated otherwise, or as modified by UFC 1-200-01, use ICC IBC as the building code for this project.

1.5 OCCUPANCY OF PREMISES

Building(s) will be occupied during performance of work under this Contract. Occupancy notifications will be posted in a prominent location in the work area.

Before work is started, arrange with the Contracting Officer a sequence of

procedure, means of access, space for storage of materials and equipment, and use of approaches, corridors, and stairways.

1.6 EXISTING WORK

In addition to "FAR 52.236-9, Protection of Existing Vegetation, Structures, Equipment, Utilities, and Improvements":

a. Remove or alter existing work in such a manner as to prevent injury or damage to any portions of the existing work which remain.

b. Repair or replace portions of existing work which have been altered during construction operations to match existing or adjoining work, as approved by the Contracting Officer. At the completion of operations, existing work must be in a condition equal to or better than that which existed before new work started.

1.7 LOCATION OF UNDERGROUND UTILITIES

Obtain digging permits prior to start of excavation by contacting the Contracting Officer 15 calendar days in advance, and comply with Installation requirements for locating and marking underground utilities. Contact local utility locating service a minimum of 48 hours prior to excavating, to mark utilities, and within sufficient time required if work occurs on a Monday or after a Holiday. Verify existing utility locations indicated on contract drawings, within area of work.

1.7.1 Notification Prior to Excavation

Notify the Contracting Officer at least 15 days prior to starting excavation work.

PART 2 PRODUCTS

Not used.

PART 3 EXECUTION

Not used.

-- End of Section --

SECTION 01 14 00

WORK RESTRICTIONS
07/16

PART 1 GENERAL

1.1 SUBMITTALS

Government approval is required for submittals with a "G" designation; submittals not having a "G" designation are for Contractor Quality Control approval. Submittals with an "S" are for inclusion in the Sustainability Notebook, in conformance with Section 01 33 29 SUSTAINABILITY REPORTING. Submit the following in accordance with Section 01 33 00 SUBMITTAL PROCEDURES:

SD-01 Preconstruction Submittals

List of Contact Personnel; G

1.2 SPECIAL SCHEDULING REQUIREMENTS

a. Have materials, equipment, and personnel required to perform the work at the site prior to the commencement of the work.

b. The nearby buildings and utilities will remain in operation during the entire construction period. The Contractor must conduct his operations so as to cause the least possible interference with normal operations of the activity.

c. Permission to interrupt any Activity roads, railroads, or utility service must be requested in writing a minimum of 15 calendar days prior to the desired date of interruption.

d. Government Telecommunications Contractor Access: The Government Telecommunications Contractor must be allowed access to the facility towards the end of construction (finishes 90 percent complete, rough-in 100 percent complete, Inside Plant (ISP)/Outside Plant (OSP) infrastructure in place) to provide equipment in the telecommunications rooms and make final connections. The Contractor will be required to coordinate their efforts with the Government Telecommunications contractor to facilitate joint use of building spaces during the final phases of construction and work the coordination effort into the construction schedule. Requirements for Government Telecommunications are specified in the contract documents.

1.3 CONTRACTOR ACCESS AND USE OF PREMISES

1.3.1 Activity Regulations

Ensure that Contractor personnel employed on the Activity become familiar with and obey Activity regulations including safety, fire, traffic and security regulations. Keep within the limits of the work and avenues of ingress and egress. Wear hard hats in designated areas. Do not enter any restricted areas unless required to do so and until cleared for such entry. Mark Contractor equipment for identification.

1.3.1.1 Subcontractors and Personnel Contacts

Provide a list of contact personnel of the Contractor and subcontractors including addresses and telephone numbers for use in the event of an emergency. As changes occur and additional information becomes available, correct and change the information contained in previous lists.

1.3.1.2 No Smoking Policy

Smoking is prohibited within and outside of all buildings on installation, except in designated smoking areas. This applies to existing buildings, buildings under construction and buildings under renovation. Discarding tobacco materials other than into designated tobacco receptacles is considered littering and is subject to fines. The Contracting Officer will identify designated smoking areas.

1.3.2 Working Hours

Regular working hours must consist of an 8 1/2 hour period established by the Contractor Officer, Monday through Friday, excluding Government holidays.

1.3.3 Work Outside Regular Hours

Work outside regular working hours requires Contracting Officer approval. Make application 15 calendar days prior to such work to allow arrangements to be made by the Government for inspecting the work in progress, giving the specific dates, hours, location, type of work to be performed, contract number and project title. Based on the justification provided, the Contracting Officer may approve work outside regular hours. During periods of darkness, the different parts of the work must be lighted in a manner approved by the Contracting Officer.

1.3.4 Occupied Building(s)

The Contractor shall be working in and around an existing building which is occupied. Do not enter the building(s) without prior approval of the Contracting Officer.

The existing buildings and their contents must be kept secure at all times. Provide temporary closures as required to maintain security as directed by the Contracting Officer.

Provide dust covers or protective enclosures to protect existing work that remains and Government material during the construction period.

Relocate movable furniture approximately 6 feetaway from the Contractor's working area, protect the furniture, and replace the furniture in its original location upon completion of the work.

1.3.5 Utility Cutovers and Interruptions

a. Make utility cutovers and interruptions after normal working hours or on Saturdays, Sundays, and Government holidays. Conform to procedures required paragraph WORK OUTSIDE REGULAR HOURS.

b. Ensure that new utility lines are complete, except for the connection, before interrupting existing service.

c. Interruption to water, sanitary sewer, storm sewer, telephone service,

electric service, air conditioning, heating, fire alarm, compressed air, and LP Gas shall be considered utility cutovers pursuant to the paragraph WORK OUTSIDE REGULAR HOURS.

d. Operation of Station Utilities: The Contractor must not operate nor disturb the setting of control devices in the station utilities system, including water, sewer, electrical, and steam services. The Government will operate the control devices as required for normal conduct of the work. The Contractor must notify the Contracting Officer giving reasonable advance notice when such operation is required.

e. Connection to Existing Sanitary Sewer Line: Provide positive verification that the existing line conveys sanitary sewer; verify line is not incorrectly connected to a storm drain.

1.4 SECURITY REQUIREMENTS

Contract Clause "FAR 52.204-2, Security Requirements and Alternate II," "FAC 5252.236-9301, Special Working Conditions and Entry to Work Area," and the following apply:

1.4.1 Business Access Security Requirements, Camp Lejeune, NC

1.4.1.1 Business Access Definition

Contractor/subcontractor employees requiring installation access to MCB, Camp Lejeune or MCAS New River, N.C. must obtain a Business Access Identification Badge for that particular installation. Regularly scheduled delivery personnel, to include FEDEX, UPS, pick-up and deliveries, should also follow the Business Access guidelines described below. Personnel requiring Business Access Identification Badges shall submit all documentation listed below. Badges are not required if the contracted position requires the employee to obtain a Common Access Card (CAC) which will be identified separately within the Government contract.

1.4.1.2 Installation Security Access Requirements

Accomplish the security requirements below within 10 days after award or prior to performance under the contract.

1.4.1.3 Business Access Identification Badge Requirement

In order to obtain a Business Access Identification Badge for access to MCB, Camp Lejeune, and satellite activities, or MCAS New River, NC, all personnel providing services under this contract shall be required to present the documentation below to the following offices, as applicable:

a. MCB, Camp Lejeune, NC and its satellite activities. Report as follows:

1. Identification Card Center, 60 Molly Pitcher Road for badge (910-451-8444).

b. MCAS New River, NC. Report as follows:

1. S-4 (Facilities Office), Bldg AS-211 (1st Deck) for registration on contractor's list (910-449-6310).

2. Pass and Identification Office, Bldg AS-187 (1st Deck) for badge

and vehicle decal (910-449-7695).

1.4.1.4 Documentation

a. Photo ID:

Valid state or federal issued picture identification card. Acceptable documents include state drivers license, DMV issued photo identification, or alien registration card.

b. Proof of Employee Citizenship or Legal Alien Status:

Acceptable documents include birth certificate, Social Security Cards, Immigration and Naturalization Service (INS) forms and passports.

c. Proof of Criminal Records Check:

Proof of a criminal records check from the county or state where the employee has resided for the previous two years (or length of legal residence for foreign nationals in the U.S. for less than two years). Criminal background records checks must be from a credible source. Many credible sources exist, but some examples include the County Courthouse, Infolink Screening Services, Inc. (www.infolinkscreening.com), IntegraScan Criminal Records Checks (www.integrascan.com), Intelius Employee Screening (www.Intelius.com), and Castle Branch www.castlebranch.com). Subsequent to the initial criminal background records checks, local criminal records checks shall be conducted annually prior to renewal of badges for reevaluation.

d. Letter Provided By Contracting Officer Indicating Contract:

Letter provided by Contracting Officer indicating contract, contract period and prime contractor. Proof of employment on a valid Government contract (e.g., a letter on company letterhead from the prime contractor including contract number and term).

1.4.1.5 Denial of Access

Installation access shall be denied if it is determined that an employee:

a. Is on the National Terrorist Watch List

b. Is illegally present in the United States.

c. Is subject to an outstanding warrant.

d. Has knowingly submitted an employment questionnaire with false or fraudulent information.

e. Has been issued a debarment order and is currently banned from military installations.

f. Is a Registered Sexual Offender, or has any Felony Conviction within the past two years.

1.4.1.6 Appeal Process

All appeals should be directed to the Base Inspector's Office for any individual that has been denied access to the Base.

1.4.1.7 Display and Disposition of Badges

Contractors/subcontractors will prominently display their badges on their person at all times. Upon completion/termination of this contract or an individual's employment, collect and turn in to the Pass & ID Office all badges. If the Contractor fails to obtain the employee's badge, the Pass & ID Office shall be notified within 24 hours. During the contract performance period contractors will immediately report instances of lost or stolen badges to the issuing pass and identification office.

1.4.1.8 Contractor and Subcontractor Vehicle Requirements

Each vehicle to be used in contract performance shall show the Contractor's or subcontractor's name so that it is clearly visible and shall always display a valid state license plate and safety inspection sticker. To obtain a vehicle decal, which will be valid for one year or contract period, whichever is shorter, Contractor or subcontractor vehicle operators shall provide to the Vehicle Registration Office, 60 Molly Pitcher Road for vehicle decal (910-451-1158):

a. An installation sponsor request forwarded to provost Marshall office.

b. A valid form of Federal or state government I.D.

c. If driving a motor vehicle, a valid driver's license, vehicle registration and proof of insurance.

Upon completion/termination of this contract or an individual's employment, the Contractor shall collect and turn in to Vehicle Registration all Government vehicle decals. If any are not collected, notify the Vehicle Registration Office within 24 hours.

1.4.1.9 Security Checks

Contractor personnel and vehicles shall only be present in locations relevant to contract performance. All Contractor personnel entering the base shall conform to all Government regulations and are subject to such checks as may be deemed necessary to ensure that violations do not occur. Employees shall not be permitted on base when such a check reveals that their presence would be detrimental to the security of the base. Subject to security regulations, the Government will allow access to an area for servicing equipment and/or performing required services. Upon request, submit to the Contracting Officer questionnaires and other forms as may be required for security purposes.

PART 2 PRODUCTS

Not Used

PART 3 EXECUTION

Not Used

-- End of Section --

THIS PAGE HAS BEEN INTENTIONALLY LEFT BLANK

SECTION 01 20 00.00 20

PRICE AND PAYMENT PROCEDURES
09/15

PART 1 GENERAL

1.1 REFERENCES

The publications listed below form a part of this specification to the extent referenced. The publications are referred to within the text by the basic designation only.

U.S. ARMY CORPS OF ENGINEERS (USACE)

EP-1110-1-8 (2009) Construction Equipment Ownership and Operating Expense Schedule

1.2 SUBMITTALS

Government approval is required for submittals with a "G" designation; submittals not having a "G" designation are for Contractor Quality Control approval. The following shall be submitted in accordance with Section 01 33 00 SUBMITTAL PROCEDURES:

SD-01 Preconstruction Submittals

EARNED VALUE REPORT; G

1.3 EARNED VALUE REPORT

1.3.1 Data Required

This contract requires the use of a cost-loaded Network Analysis Schedule (NAS). The information required for the Schedule of Prices will be entered as an integral part of the Network Analysis Schedule. Within 15 calendar days of notice of award, prepare and deliver to the Contracting Officer an Earned Value Report (construction contract) as directed by the Contracting Officer. Provide a detailed breakdown of the contract price, giving quantities for each of the various kinds of work, unit prices, and extended prices. Costs shall be summarized and totals provided for each construction category.

1.3.2 Schedule Instructions

Payments will not be made until the Earned Value Report from the cost-loaded NAS has been submitted to and accepted by the Contracting Officer. Identify the cost for site work, and include incidental work to the 5 ft line. Identify costs for the building(s), and include work out to the 5 ft line. Work out to the 5 ft line shall include construction encompassed within a theoretical line 5 ft from the face of exterior walls and shall include attendant construction, such as pad mounted HVAC cooling equipment, cooling towers, and transformers placed beyond the 5 ft line.

1.3.3 Real Property Assets

Real Property Assets identified in Section 01 78 00 CLOSEOUT SUBMITTALS, Paragraph "REAL PROPERTY RECORD" apply to work covered by this

specification.

Cost data accumulated under this section are required in the preparation of DD Form 1354. Coordinate with Section 01 78 00 CLOSEOUT SUBMITTALS, Paragraph "REAL PROPERTY RECORD".

NOTE: Real Property Unique Identifiers (RPUID's) will be provided by the Government but may not be available until later in the project schedule. Coordinate receipt of the RPUID's with the Contracting Officer and the Real Property Accounting Officer. Temporary RPUID's may be required until the actual RPUID's can be provided.

The Government will provide the Draft DD Form 1354, Transfer and Acceptance of Military Real Property filled in with the appropriate construction Category Codes to summarize the designed real property assets that apply to this contract. The Contractor shall meet with the Contracting Officer and the Real Property Accounting Officer during the Pre Construction Meeting and the Project Closeout Meetings to modify and include any necessary changes to the DD Form 1354. The Contractor shall obtain related Real Property Unique Identifiers (RPUID's) from the Real Property Accounting Officer during or following the Pre Construction Meeting. The Contractor shall provide the Interim DD Form 1354 that uses the appropriate division of the RPUID's/ Category Codes to represent the final constructed facility and include all associated cost. Coordinate the Contractor's Price and Payment structure with the structure of the RPUID's/ Category Codes.

Divide detailed asset breakdown into the RPUID's and related construction Category Codes and populate associated costs which represent all aspects of the work. Where assets diverge into multiple RPUID's/ Category Codes, divide the asset and provide the proportion of the assets in each Facility Number/ Category Code. Assets and related RPUID's/ Category Codes may be modified by the Contracting Officer as necessary during course of the work. Coordinate identification and proportion of these assets with the Government Real Property Accounting Officer.

1.3.4 Schedule Requirements for HVAC TAB

The field work Section 23 05 93.00 22 TESTING, ADJUSTING, AND BALANCING FOR MECHANICAL SYSTEMS shall be broken down in the Earned Value Report from the cost-loaded NAS by separate line items which reflect measurable deliverables. Specific payment percentages for each line item shall be determined on a case by case basis for each contract. The line items shall be as follows:

a. Approval of Design Review Report: The TABS Agency is required to conduct a review of the project plans and specifications to identify any feature, or the lack thereof, that would preclude successful testing and balancing of the project HVAC systems. The resulting findings shall be submitted to the Government to allow correction of the design. The progress payment shall be issued after review and approval of the report.

b. Approval of the pre-field engineering report: The TABS Agency submits a report which outlines the scope of field work. The report shall contain details of what systems will be tested, procedures to be used, sample report forms for reporting test results and a quality control checklist of work items that must be completed before TABS field work commences.

c. Season I field work: Incremental payments are issued as the TABS field work progresses. The TABS Agency mobilizes to the project site and executes the field work as outlined in the pre-field engineering report. The HVAC water and air systems are balanced and operational data shall be collected for one seasonal condition (either summer or winter depending on project timing).

d. Approval of Season I report: On completion of the Season I field work, the data is compiled into a report and submitted to the Government. The report is reviewed, and approved, after ensuring compliance with the pre-field engineering report scope of work.

e. Completion of Season I field QA check: Contract QC and Government representatives meet the TABS Agency at the jobsite to retest portions of the systems reported in the Season I report. The purpose of these tests are to validate the accuracy and completeness of the previously submitted Season I report.

f. Approval of Season II report: The TABS Agency completes all Season II field work, which is normally comprised mainly of taking heat transfer temperature readings, in the season opposite of that under which Season I performance data was compiled. This data shall be compiled into a report and submitted to the Government. On completion of submittal review to ensure compliance with the pre-field engineering report scope, progress payment is issued. Progress payment is less than that issued for the Season I report since most of the water and air balancing work effort is completed under Season I.

1.4 CONTRACT MODIFICATIONS

In conjunction with the Contract Clause "DFARS 252.236-7000, Modification Proposals-Price Breakdown," and where actual ownership and operating costs of construction equipment cannot be determined from Contractor accounting records, equipment use rates shall be based upon the applicable provisions of the EP-1110-1-8.

1.5 CONTRACTOR'S INVOICE AND CONTRACT PERFORMANCE STATEMENT

1.5.1 Content of Invoice

Requests for payment will be processed in accordance with the Contract Clause FAR 52.232-27, Prompt Payment Construction Contracts and FAR 52.232-5, Payments Under Fixed-Price Construction Contracts. The requests for payment shall include the documents listed below.

a. The Contractor's invoice.

b. The Earned Value Report from the cost-loaded NAS, showing in detail: the estimated cost, percentage of completion, and value of completed performance for each of the construction categories stated in this contract.

c. Updated Project NAS and reports required by the contract.

d. Contractor Safety Self Evaluation Checklist.

e. Other supporting documents as requested.

f. Updated copy of submittal register.

g. Invoices not completed in accordance with contract requirements will be returned to the Contractor for correction of the deficiencies.

h. Affidavit to accompany invoice (LANTDIV NORVA Form 4-4235/4 (Rev.5/81)).

i. Materials on Site.

1.5.2 Submission of Invoices

If NFAS Clause 5252.232-9301 is included in the contract, the listed documents shall be provided as attachments in Wide Area Work Flow (WAWF). The maximum size of each WAWF attachment is two megabytes, but there are no limits on the number of attachments. If a document cannot be attached in WAWF due to system or size restriction it shall be provided as instructed by the Contracting Officer.

Monthly invoices and supporting forms for work performed through the anniversary award date of the contract shall be submitted to the Contracting Officer within 5 calendar days of the date of invoice. For example, contract award date is the 7th of the month, the date of each monthly invoice shall be the 7th and the invoice shall be submitted by the 12th of the month.

1.5.3 Final Invoice

a. A final invoice shall be accompanied by the Contractor's Final Release. If the Contractor is incorporated, the Final Release shall contain the corporate seal. An officer of the corporation shall sign and the corporate secretary shall certify the Final Release.

b. For final invoices being submitted via WAWF, the original Contractor's Final Release Form must be provided directly to the respective Contracting Officer prior to submission of the final invoice. Once receipt of the original Final Release Form has been confirmed by the Contracting Officer, the Contractor shall then submit final invoice and attach a copy of the Final Release Form in WAWF.

c. Final invoices not accompanied by the Contractor's Final Release will be considered incomplete and will be returned to the Contractor.

1.6 PAYMENTS TO THE CONTRACTOR

Payments will be made on submission of itemized requests by the Contractor which comply with the requirements of this section, and will be subject to reduction for overpayments or increase for underpayments made on previous payments to the Contractor.

1.6.1 Obligation of Government Payments

The obligation of the Government to make payments required under the provisions of this contract will, at the discretion of the Contracting Officer, be subject to reductions and/or suspensions permitted under the FAR and agency regulations including the following in accordance with "FAR 32.503-6:

a. Reasonable deductions due to defects in material or workmanship;

b. Claims which the Government may have against the Contractor under or in connection with this contract;

c. Unless otherwise adjusted, repayment to the Government upon demand for overpayments made to the Contractor; and

d. Failure to provide up to date record drawings not current as stated in Contract Clause "FAC 5252.236-9310, Record Drawings."

1.6.2 Payment for Onsite and Offsite Materials

Progress payments may be made to the contractor for materials delivered on the site, for materials stored off construction sites, or materials that are in transit to the construction sites under the following conditions:

a. FAR 52.232-5(b) Payments Under Fixed Price Construction Contracts.

b. Materials delivered on the site but not installed, including completed preparatory work, and off-site materials to be considered for progress payment shall be major high cost, long lead, special order, or specialty items, not susceptible to deterioration or physical damage in storage or in transit to the construction site. Examples of materials acceptable for payment consideration include, but are not limited to, structural steel, non-magnetic steel, non-magnetic aggregate, equipment, machinery, large pipe and fittings,precast/prestressed concrete products, plastic lumber (e.g., fender piles/curbs), and high-voltage electrical cable. Materials not acceptable for payment include consumable materials such as nails, fasteners, conduits, gypsum board, glass, insulation, and wall coverings.

c. Materials to be considered for progress payment prior to installation shall be specifically and separately identified in the Contractor's estimates of work submitted for the Contracting Officer's approval in accordance with Earned Value Report requirement of this contract. Requests for progress payment consideration for such items shall be supported by documents establishing their value and that the title requirements of the clause at FAR 52.232-5 have been met.

d. Materials are adequately insured and protected from theft and exposure.

e. Provide a written consent from the surety company with each payment request for offsite materials.

f. Materials to be considered for progress payments prior to installation shall be stored in the Continental United States.

PART 2 PRODUCTS

Not Used.

PART 3 EXECUTION

Not Used.

-- End of Section --

THIS PAGE HAS BEEN INTENTIONALLY LEFT BLANK

SECTION 01 30 00

ADMINISTRATIVE REQUIREMENTS
02/17

PART 1 GENERAL

1.1 REFERENCES

The publications listed below form a part of this specification to the extent referenced. The publications are referred to within the text by the basic designation only.

U.S. ARMY CORPS OF ENGINEERS (USACE)

EM 385-1-1 (2014) Safety and Health Requirements Manual

1.2 SUBMITTALS

Government approval is required for submittals with a "G" designation; submittals not having a "G" designation are for Contractor Quality Control approval. Submit the following in accordance with Section 01 33 00 SUBMITTAL PROCEDURES:

SD-01 Preconstruction Submittals

View Location Map; G

Progress and Completion Pictures; G

1.3 VIEW LOCATION MAP

Submit, prior to or with the first digital photograph submittals, a sketch or drawing indicating the required photographic locations. Update as required if the locations are moved.

1.4 PROGRESS AND COMPLETION PICTURES

Photographically document site conditions prior to start of construction operations. Provide monthly, and within one month of the completion of work, digital photographs, 1600x1200x24 bit true color minimum resolution in JPEG file format showing the sequence and progress of work. Take a minimum of 20 digital photographs each week throughout the entire project from a minimum of ten views from points located by the Contracting Officer. Submit with the monthly invoice two sets of digital photographs, each set on a separate compact disc (CD) or data versatile disc (DVD), cumulative of all photos to date. Indicate photographs demonstrating environmental procedures. Provide photographs for each month in a separate monthly directory and name each file to indicate its location on the view location sketch. Also provide the view location sketch on the CD or DVD as a digital file. Include a date designator in file names. Cross reference submittals in the appropriate daily report. Photographs provided are for unrestricted use by the Government.

1.5 MINIMUM INSURANCE REQUIREMENTS

Provide the minimum insurance coverage required by FAR 28.307-2

LIABILITY, during the entire period of performance under this contract. Provide other insurance coverage as required by State law.

1.6 FIRST TIER CONTRACTOR REQUIREMENTS FOR SPACE TEMPERATURE CONTROL, HVAC TAB, AND APPARATUS INSPECTION

All contract requirements of Section 23 09 00.00 22 INSTRUMENTATION AND CONTROL FOR HVAC Section 23 05 93.00 22 TESTING, ADJUSTING AND BALANCING FOR MECHANICAL SYSTEMS and Section 26 08 00 APPARATUS INSPECTION AND TESTING shall be accomplished directly by a first tier subcontractor. No work required by Section 23 09 00.00 22 23 05 93.00 22 or 26 08 00 shall be accomplished by a second tier subcontractor.

1.7 SUPERVISION

1.7.1 Minimum Communication Requirements

Have at least one qualified superintendent, or competent alternate, capable of reading, writing, and conversing fluently in the English language, on the job-site at all times during the performance of contract work. In addition, if a Quality Control (QC) representative is required on the contract, then that individual must also have fluent English communication skills.

1.7.2 Superintendent Qualifications

The project superintendent must have a minimum of 10 years experience in construction with at least 5 of those years as a superintendent on projects similar in size and complexity. The individual must be familiar with the requirements of EM 385-1-1 and have experience in the areas of hazard identification and safety compliance. The individual must be capable of interpreting a critical path schedule and construction drawings. The qualification requirements for the alternate superintendent are the same as for the project superintendent. The Contracting Officer may request proof of the superintendent's qualifications at any point in the project if the performance of the superintendent is in question.

For routine projects where the superintendent is permitted to also serve as the Quality Control (QC) Manager as established in Section 01 45 00.00 20 QUALITY CONTROL, the superintendent must have qualifications in accordance with that section.

1.7.2.1 Duties

The project superintendent is primarily responsible for managing and coordinating day-to-day production and schedule adherence on the project. The superintendent is required to attend NAVFAC Red Zone meetings, partnering meetings, and quality control meetings. The superintendent or qualified alternative must be on-site at all times during the performance of this contract until the work is completed and accepted.

1.7.3 Non-Compliance Actions

The Project Superintendent is subject to removal by the Contracting Officer for non-compliance with requirements specified in the contract and for failure to manage the project to insure timely completion. Furthermore, the Contracting Officer may issue an order stopping all or part of the work until satisfactory corrective action has been taken. No part of the time lost due to such stop orders is acceptable as the subject

of claim for extension of time for excess costs or damages by the Contractor.

1.8 PRECONSTRUCTION MEETING

After award of the contract but prior to commencement of any work at the site, meet with the Contracting Officer to discuss and develop a mutual understanding relative to the administration of the value engineering and safety program, preparation of the schedule of prices or earned value report, shop drawings, and other submittals, scheduling programming, prosecution of the work, and clear expectations of the "Interim DD Form 1354" Submittal. Major subcontractors who will engage in the work must also attend.

1.8.1 Cybersecurity of Control Systems

Discuss Cybersecurity of building control system requirements and submittals as required for Section 25 50 00.00 20 CYBERSECURITY OF FACILITY-RELATED CONTROL SYSTEMS.

1.9 FACILITY TURNOVER PLANNING MEETINGS (NAVFAC Red Zone - NRZ)

Meet with the Government to identify strategies to ensure the project is carried to expeditious closure and turnover to the Client. Start the turnover process at the Pre-Construction Conference meeting with a discussion of the NAVFAC Red Zone (NRZ) process and convene at regularly scheduled NRZ Meetings. See attached NAVFAC Red Zone Facility Turnover Planning Meeting AGENDA for typical meeting agenda. Include the following in the facility Turnover effort:

1.9.1 NRZ Checklist

a. Contracting Officer's Technical Representative (COTR) will provide the Contractor a copy of the NRZ Checklist template prior to 75 percent completion. See attached NRZ Checklist Items.

b. Prior to 75 percent completion add/delete critical activities to the NRZ Checklist template as necessary to match the project scope, and schedule critical activities and insert planned completion dates in the NRZ checklist for each critical activity. Present the NRZ Checklist to COTR and review during a regularly scheduled QC Meeting.

1.9.2 Meetings

a. Upon Government acceptance of the NRZ Checklist, the Project Superintendent is required to lead regular NRZ Meetings beginning at approximately 75 percent project completion, or three to six months prior to Beneficial Occupancy Date (BOD), whichever comes first.

b. The Contracting Officer will determine the frequency of the meetings, which is expected to increase as the project completion draws nearer.

c. Using the NRZ Checklist as a Plan of Action and Milestones (POAM) and basis for discussion, review upcoming critical activities and strategies to ensure work is completed on time.

d. Coordinate with the COTR any upcoming activities that require Government involvement.

e. Maintain the NRZ Checklist by documenting the actual completion dates as work is completed and update the NRZ Checklist with revised planned completion dates as necessary to match progress. Distribute copies of the current NRZ Checklist to attendees at each NRZ Meeting.

1.9.3 Facility Turnover Planning Meeting Attendees

The following key personnel are to attend the Facility Turnover Meetings: Contractor QC Manager, Superintendent, Major Subcontractors, Designer-of-Record, Contracting Officer's Representative, Representative(s) of NAVFAC, the Facility Owner, and the Client.

1.10 PARTNERING

To most effectively accomplish this contract, the Government requires the formation of a cohesive partnership within the Project Team whose members are from the Government, the Contractor and their Subcontractors. Key personnel from the Supported Command, the End User (who will occupy the facility), the Government Design and Construction team and Subject Matter Experts, the Installation, the Contractor and Subcontractors, and the Designer of Record will be invited to participate in the Partnering process. The Partnership will draw on the strength of each organization in an effort to achieve a project that is without any safety mishaps, conforms to the Contract, and stays within budget and on schedule.

The Contracting Officer will provide Information on the Partnering Process and a list of key and optional personnel who should attend the Partnering meeting.

1.10.1 Informal Partnering

The Contracting Officer will organize the Partnering Sessions with key personnel of the project team, including Contractor personnel and Government personnel.

The Initial Partnering session should be a part of the Pre-Construction Meeting. Partnering sessions will be held at a location agreed to by the Contracting Officer and the Contractor (typically a conference room provided by the PWD FEAD/ROICC office or the Contractor). The Initial Informal Partnering Session will be conducted and facilitated using electronic media (a video and accompanying forms) provided by the Contracting Officer. The Partners will determine the frequency of the follow-on sessions, at no more than 3 to six month intervals.

1.11 ELECTRONIC MAIL (E-MAIL) ADDRESS

Establish and maintain electronic mail (e-mail) capability along with the capability to open various electronic attachments as text files, pdf files, and other similar formats. Within 10 days after contract award, provide the Contracting Officer a single (only one) e-mail address for electronic communications from the Contracting Officer related to this contract including, but not limited to contract documents, invoice information, request for proposals, and other correspondence. The Contracting Officer may also use email to notify the Contractor of base access conditions when emergency conditions warrant, such as hurricanes or terrorist threats. Multiple email addresses are not allowed.

It is the Contractor's responsibility to make timely distribution of all Contracting Officer initiated e-mail with its own organization including

field office(s). Promptly notify the Contracting Officer, in writing, of any changes to this email address.

PART 2 PRODUCTS

Not Used

PART 3 EXECUTION

Not Used

-- End of Section --

NAVFAC Red Zone
Facility Turnover Planning Meeting

AGENDA

I. Introduction and Overview – Purpose CM

The purpose of the Facility Turnover Planning Meeting is to address elements within the project team's purview – schedule management, assure completed facility complies with contract requirements, and other contractual issues. Each member of the project delivery team (Client, NAVFAC, and the contractor) has critical responsibilities to ensure timely completion and turnover of the new facility and each member should execute the NRZ process to achieve this end. The NRZ process provides a final re-focusing of attention to details of those key elements critical for a successful construction contract completion. In implementing NRZ processes, the NAVFAC/Contractor/Client team take a collective "snapshot" of contract status, identifying remaining actions to be accomplished, and confirm required resources needed for successful contract completion and turnover to the Client.

The Facility Turnover Planning Meeting is a collaborative effort between the Client, NAVFAC, and the contractor and results in a completed "NRZ Checklist/POAM Items" list that identifies the major items (and their due dates) that must be completed by the Contractor, the Client and the NAVFAC team to ensure timely completion of the contract.

II. Attendees

NAVFAC Echelon IV (PM); NAVFAC FEAD/ROICC Team (AROICC, CM, ET/QA, Contracting Officer); Client Team (Project Manager, Program Coordinator, User/Tenant); Contractor Team (Project Manager, Project Superintendent, CQC Manager)

III. Schedule to Completion (POAM)	Contractor
IV. Schedule of Final Outfitting and Occupancy (POAM)	Client
V. Critical feature(s) of project (POAM)	CM
VI. Transfer of Maintenance Responsibility	CM
VII. Systems training & O&M Manuals (POAM)	CQC Manager
VIII. Other Items to include on NRZ checklists	All
IX. Summary of Required Actions and Responsibility	CM

Guidelines for conducting Facility Turnover Planning Meeting are as follows:

a. Meeting is held at approximately 75% construction contract completion or three to six months prior to BOD. NAVFAC representatives will include the Project Manager, Construction Manager/AROICC (CM) and Design Manager (DM), as appropriate. The contractor representatives include applicable prime contractor staff and decision-makers from major subcontractors. Design-Build contractors will have A-E representatives attending. The Client should include representatives from Public Works Officer (PWO) staff, a Client scope and financial decision maker, a user tenant representative, a facility start-up person, and others such as SPAWAR, Government Telecommunications Contractor, telephone, and furniture contractor, etc.

b. The purpose of the meeting is to plan the remaining work, identify critical project features that still need to be completed (such as “soft” construction contract requirements as shown on the NRZ Checklist/POAM Items), and to complete the filling out of the “NRZ Checklist/POAM Items”.

c. The contractor, client and NAVFAC provide a POC and due date for each item on their checklist. The team fills in the checklists by selecting items applicable to the project, selects due dates on each item, and appoints a person who has responsibility to ensure the item gets completed by the due date. The CM will be responsible to monitor the milestones.

NRZ Checklist/POAM Items

The tables below provide typical NRZ checklist items for contractor, Client, and NAVFAC actions (Tables 1, 2, and 3, respectively). Items listed on the checklists are required to remain on the checklists if they are part of the project/contract or required by construction convention. Items not listed on the checklists, but required in the contract or by construction convention, must be added to the checklists by the contractor, Client and NAVFAC. Checklists are applicable to all contracts no matter what Category of Work.

The Point of Contact and due date shall initially be determined during the Facility Turnover Planning Meeting by the NAVFAC, client and contractor leads. During execution of the NRZ process, for each item on the entire list, the Construction Manager (CM) shall indicate date completed and initial to indicate completion of the item. If a party fails to complete an item by the due date, this should be noted on the checklist and new due date established and indicated. The completed NRZ Checklist/POAM shall be placed in the contract file.

Table 1

Contractor Checklist Items	Point of Contact	Due Date	Actual Complete Date	CM Initials	Notes
a. Construction Completion Schedule					
b. Facility Delivery Closeout:					
Duct Air Leakage Testing					
HVAC System Test & Balance					
ACATS Controls Testing					
Conduct Second Seasons TAB					
Electrical Systems Testing					
Final utility systems connections (power, water, etc.)					
Superchlorination of potable water systems					
Plumbing / Other Mechanical Testing					
Elevator Certification(s)					
Specialized Equipment & Systems Inspections (Boilers, UPV, etc.)					
Fire Protection Systems Inspections and Performance Verification					
Communications / IT Systems Testing					
Security Systems Testing					
Other Specified Building Performance Requirements					
c. Other Contractor Items:					
Delivery of O&M Manuals					
Delivery of Equipment/Product Warranty List/Tag					
O&M/OMSI Training of Navy Personnel					
Site Restoration, if applicable					

Contractor Checklist Items	Point of Contact	Due Date	Actual Complete Date	CM Initials	Notes
Landscaping Complete					
Pre-Final Inspection					
Final Inspection and Acceptance					
Delivery of Spare Parts, Extra Stock, Special Tools, etc					
Delivery of As-Built Drawings					
Delivery of Utility Record Drawings (if applicable)					
Delivery of Utility As-Built Drawings (if applicable)					
Beneficial Occupancy Date (BOD)					
Final Demobilization and Clean-up Completed					
Remove Construction Fence & Associated Coordination					
Pre-warranty Conference					
Project Close-out Meeting					
Coordination and Delivery of Facility Signage					
Final Cleaning					
Replace Construction Lock Cores and Re-keying					
Punch List Completion					
Provide DD1354 to Government CM					

Table 2

Client Checklist Items	**Point of Contact**	**Due Date**	**Actual Complete Date**	**CM Initials**	**Notes**
Modification to FSC or BOSC to maintain/service new facility -Telephone service contract -Utilities service contract -Custodial service contract					
Installation of communications for phones and computers					
Government Telecommunications Installations or other networks					
Delivery and installation of client furnished furniture					
Delivery and installation of client furnished equipment					
User move-in					
GFE status/delivery schedule (GFCI, GFGI)					
Coordination of Intrusion Detection Systems and Physical Security Equipment					
Process operating permits					
Recycled/recovered materials report					
Coordination of IT and Communication Infrastructure and Devices (incl. CAT IV)					
Ribbon-cutting ceremony					

Table 3

NAVFAC Checklist Items	Point of Contact	Due Date	Actual Complete Date	CM Initials	Notes
Client walk-thru prior to pre-final inspections, if appropriate					
Schedule client satisfaction post BOD follow-up					
Schedule Government inspections of specialized equipment (e.g., Boiler/pressure vessels, elevators, UPS, Secure Room shielding requirements, medical certifications, generators/switchgear)					
Provide keying plan to contractor					
Confirm utilities availability for final connections by contractor					
Startup utilities					
Mechanical Acceptance					
Resolve contract modifications & requests for equitable adjustment					
Contractor final release					
Return unobligated funds					
Process final payment					
Process recycled/recovered materials report					
Closeout actions on construction permits (e.g., NPDES)					
A-E and Construction Contractor Evaluations (ACASS/CCASS)					
Contractor QC Evaluation					
Complete Installed Property List and DD 1354					
Sign & provide Interim DD1354 to activity Real Property Accountability Officer NLT BOD					

Performance Assessment Plan
MONTHLY EVALUATION

MONTH: _____YEAR:_____

Evaluation Factor	Yes	No	N/A	Comments
Experience of Personnel 1. Did the team identified in the proposal actively participate in the project? 2. If personnel substitutions were needed, was the degree of technical competence maintained?				
Working Relationships 1. Did the Construction team participate in the design process (i.e. attend meetings, provide insight, etc.)? Were the coordination meetings between Construction and Design team personnel documented? 2. Did the Design team participate in the construction process (i.e. attend CQC meetings, perform field oversight, etc.)? Were coordination meetings between Construction and Design team personnel documented? 3. Did the collaboration between the Construction and Design Team deliver a high value innovative facility? - Were Total Operating Cost minimized - What LEED points can be obtained - Was energy efficiency optimized, and the energy goals exceeded. 4. Was the budget management process clear; was an estimate submitted on time with each design submittal. Was the estimate updated to reflect the changes in the design submittal? 5. Did the Contractor's team effectively manage the project budget and the User's requirements to meet the customer's needs? Was project budget and emphasis in cost control exhibited in the estimate? (Contractor to document in comments block				

materials/systems innovations and provision of higher quality than required in the RFP Part 4) *Additional factors to be developed during Partnering.*				
Quality Control 1. Were re-submittals of design deliverables or construction rework required this month? 2. Were as built redlines updated this month? *Additional factors to be developed during Partnering.*				
Timely Performance 1. Is the Contractor on schedule? 2. Is the Contractor maintaining the schedule? (Can the Government confirm the project is on schedule?) 3. Is the Contractor following his schedule? *Additional factors to be developed during Partnering.*				
Effectiveness of Management 1. Did the Government need to intercede in resolving a subcontractor issue? *Additional factors to be developed during Partnering.*				
Compliance with Labor Standards 1. Did payrolls have to be resubmitted this month due to inaccuracies or errors? *Additional factors to be developed during Partnering.*				
Compliance with Safety Standards 1. Were there any lost time accidents this month?				

Additional factors to be developed during Partnering.				

GENERAL PERFORMANCE COMMENTS THIS MONTH:

Concurrence:

CM/ROICC Representative _____Date_____.

Project Manager _____Date_____.

Contractor Representative _____Date_____.

THIS PAGE HAS BEEN INTENTIONALLY LEFT BLANK

SECTION 01 30 01.00 22

DESIGN, PROCUREMENT, AND INSTALLATION OF FURNITURE, FIXTURES, AND EQUIPMENT
09/15

PART 1 GENERAL

1.1 REFERENCES

The publications listed below form a part of this specification to the extent referenced. The publications are referred to within the text by the basic designation only.

UNIFIED FACILITIES CRITERIA (UFC)

UFC 3-120-10 (2006; Change 1, 2007) Interior Design

1.2 SUBMITTALS

Government approval is required for submittals with a "G" designation; submittals not having a "G" designation are for Contractor Quality Control approval. The following must be submitted in accordance with Section :

SD-02 Shop Drawings

Preliminary (Pre-final) FF&E package; G, ID NAVFAC MIDLANT Interior Design

Final FF&E package; G, ID NAVFAC MIDLANT Interior Design

Best Value Determinations; G, ID NAVFAC MIDLANT Interior Design

SD-07 Certificates

Contractor's Interior Designer's Qualifications; G, ID NAVFAC MIDLANT Interior Design

SD-11 Closeout Submittals

Punch List Documents; G, ID

Factory Ordering Documentation; G

1.3 GENERAL REQUIREMENTS

Furnishings, Fixtures, and Equipment (FF&E) must include, but is not limited to; furniture, shop equipment, specialty equipment, audio visual (A/V), appliances, soft window treatments (draperies, valances, and cornices), artwork, accessories, and other miscellaneous items to support facility functions. Weapon racks, drying cages, large graphics , roller shades and lockers are not considered FF&E. FF&E and A/V must be fully integrated with the building systems and finishes. FF&E may also include specialty items for which the customer activity must be responsible for specifying.

The design and documentation of the FF&E and A/V must be funded as the Interior Design Services Option. The purchase and installation of the FF&E Package must be funded separately as the FF&E Planned Modification. The Government FF&E budgets on the Bid Schedule/Price Proposal Form for the FF&E Planned Modification is $319,189.00 and do NOT include the Contractor's Handling and Administration Rate (HAR). This Government FF&E estimate must not be altered by Contractors during the bid process. All FF&E items are subject to the Buy American Act or the Trade agreement.

1.4 INTERIOR DESIGN SERVICES OPTION

1.4.1 Qualifications and Affiliations

Provide the services of an Interior Designer: Per UFC 3-120-10, The Interior Designer of Record, hereafter referred to as the Prime Contractor's Interior Designer, must be certified by the National Council for Interior Design Qualification (NCIDQ).

The Prime Contractor's Interior Designer, Design Firm owners, and any Specialists must NOT have any affiliation with any furniture, fixture, or equipment products, any furniture dealership or manufacturers. Provide documentation of the Prime Contractor's Interior Designer's qualifications and significant interior design experience. The Government reserves the right to approve/disapprove the Prime Contractor's Interior Designer.

1.4.2 Concept FF&E package

A Concept FF&E package, prepared by the NAVFAC Interior Designer, indicating the salient characteristics of all required FF&E and A/V items and CADD drawings, will be provided to the Prime Contractor. As a separately priced option, the Prime Contractor must provide the services of a Certified Interior Designer to function as Prime Contractor's Interior Designer, to prepare and provide the Final, Best Valued FF&E Package and procurement data based on the Concept FF&E package.

All fixed and movable furnishings selections must be closely coordinated with the final construction documents and interior finishes. The Prime Contractor's Interior Designer are required to validate all FF&E requirements with the Activity, make any necessary changes to the FF&E and interior building finishes. Per UFC 3-120-10, the (FF&E) includes the design, selection, specification, color coordination, and procurement documentation of the required items necessary to meet the functional, operational, sustainability, and aesthetic needs of the facility. The FF&E package must be fully integrated with the design, construction, and schedule of all building finishes and all building systems (HVAC, Plumbing, Fire Protection, Communuications, Electrical, Data, Architecture, etc. All outlets, switches, fire extinguishers, thermostats, etc. must be fully accessible. All sprinkler heads, ADA, etc. clearances must be accommodated.

The Prime Contractor's Interior Designer must also attend walk-throughs, coordinate mock-ups, and attend any and all required meetings to accomplish this task. The Contractor's Interior Designer and equipment specialists must be responsible for designing and providing specifications for procurement of all FF&E, to include delivery and installation, for the facilities built under this contract as directed by the NAVFAC Interior Designer. FF&E specifications must be based on NAVSUP Blanket Purchase Agreements (BPA's), GSA schedules, and other Federal contracts and complying with priorities found in FAR Part 8.404. For the FF&E packages.

The utilization of the current NAVSUP BPA list is required for BVD Analysis Request for Pricing. The current NAVSUP BPA list is available at: https://www.wbdg.org/ffc/navy-navfac/collateral-equipment.
The contractors interior designer is to verity with the Navfac Interior designer that all documents are curent before utlizing these forms.

1.4.3 Audio Visual (A/V) and/or other Specialty Furniture or Equipment

When A/V, or other specialty furniture or equipment, i.e. shop equipment, kitchen equipment, fitness equipment, high density storage, etc., is required in the project, the Contractor must obtain the services of equipment specialists to provide design and specifications for the specialty equipment.

1.5 FURNISHINGS, FIXTURES, AND EQUIPMENT (FF&E) SUBMITTALS FOR THE INTERIOR DESIGN SERVICES OPTION

Develop design as described and in accordance with the Activity requirements. Include in the design all loose furnishings required to produce an optimum functional facility, consistent with quality commercial design. This project also includes the preparation of specific detailed information for each selected item. Each submittal must demonstrate thorough interaction with the Activity requirements and complete coordination with the facility design and the Structural Interior Design (SID).

These are minimum requirements and the Prime Contractor must be prepared to provide any/all additional meetings and submittals that may be necessary to support the Interior Design effort/ and FF&E coordination.

1.5.1 FF&E Requirements (Interior Design Orientation) Meeting

This meeting must occur at the Pre-Construction meeting prior to the FF&E "Over the Shoulder" Review and the development of the FF&E package. The NAVFAC Interior Designer will provide the Contractor's Interior Designer a sample format of the FF&E submittal, review the Best Value Determination (BVD) process, discuss the number of Best Value Determinations required and discuss Blanket Purchase Agreement (BPAs), GSA or other mandatory sources to consider. Minutes of this meeting must be submitted to the NAVFAC Interior Designer within 7 business days.

1.5.2 FF&E "Over the Shoulder" Review

Prior to the FF&E Concept Presentation and Best Value Determination (BVD) Analysis, the Contractor's Interior Designer must meet with the NAVFAC Interior Designer for an "over-the-shoulder" review to present preliminary FF&E options. These can be presented in a "loose" format for preliminary approval prior to the Activity presentation. The "over-the-shoulder" review meeting must be held at NAVFAC, located in Norfolk, VA .

1.5.3 FF&E Concept Presentation

The Prime Contractor's Interior Designer must present the NAVFAC approved Preliminary (Pre-final) FF&E package to the Activity, located at _Camp Lejuene_, for approval. This presentation must include loose format samples and catalog cuts. Sample boards are not required.

1.5.4 Best Value Determination(BVD) Analysis "Over the Shoulder Review"

Prior to issuing the Best Value Determinations (BVD) Analysis, the Prime Contractor's Interior Designer must meet with the NAVFAC Interior Designer for an "over-the-shoulder" review of the solicitation package and request a copy of the most current NAVSUP BPA vendor list. The interior designer must sent the NAVFAC interior designer a hard copy prior to the "over-the-shoulder" review meeting. This meeting can be held via conference call or at the NAVFAC office in Norfolk, VA. The Contractor's Interior Designer must provide a copy of the BVD Analysis Request for Pricing cover letter to the Contractor for review and comment prior to the BVD Analysis "Over the Shoulder Review" meeting.

BVD Analysis approved Solicitation will be sent to all BPA vendors as directed by the Navfac interior designer and must include the following;

a. Copy of the BVD Analysis Request for Pricing cover letter.

b. BVD Analysis Request for Pricing Spreadsheet/Questionnaire with "basis of design" item product numbers, photos & descriptions.

c. Technical Specification on every item to establish minimum acceptable FF&E requirements.

d. Project Specific Room/Furniture Typicals.

e. Furniture Plans with Legends coded to the BVD Analysis Spreadsheet (PDF format).

1.5.5 BVD Analysis Solicitation Bid results Review

The Prime Contractor's Interior Designer must submit one (1) hard copy of the Preliminary BVD package to the NAVFAC Interior Designer and one (1)hard copy to IDD/Base Property for Marine Corps projects. An electronic copy must be sent to the NAVFAC Interior Designer and Contracting Officer. The "over-the-shoulder" review meeting will be held by conferencen call to review the results of the solicitation and determine a best value recommendation. The BVD Submittal must be in a 3-ring binder and must include the following items for review and approval. The Binders are to have the submittal title identified on binder cover and spine

a. Cover Title Page (project name, project #, location, submittal date, submittal title)

b. Table of Contents.

c. Point of Contact List.

d. Narrative of Interior Designer Objectives.

e. BVD Analysis Request for Pricing Spreadsheet/Questionnaire completed by all bidders and completed Questionnaire.

f. Copy of all information, including RFI's,sent to bidders and documentation that all required BPA vendors were contacted.

g. Back-up Information submitted by each bidder (cut sheets/highlighted pricing sheets/technical specifications, pricing, dealer and manufacturer qualification for each product showing that products meets all requirements). Provide in CD format and include within each binder.

h. Response(s) from UNICOR.

i. BVD Analysis Pricing Evaluation Spreadsheet comparing bidder quotes/responses.

j. Contractor's Interior Designer recommendation for the Best Value vendor and justifications.

1.5.6 Pre-Final FF&E Submittal

The Preliminary FF&E must be presented to the Activity and NAVFAC in loose format to select the final products and finishes. This meeting must occur at Camp Lejeune.

Pre-Final Submittal is to be submitted in a 3-ring binder for review and approval. The Binders are to have the submittal title identified on binder cover and spine Five(5) prefinal binders will be required for this project;(1) for the NAVFAC Interior Designer,(3)for the FEAD/ROICC IDD and Base Property, and (1) for the Activity.This binder is to include the following:

a. Cover Title Page (project name and number, submittal date and title).

b. Table of Contents.

c. Point of Contact List (includes contact info for recommended Best Value BPA Holder(s) vendors and subcontractors).

d. Preliminary FF&E list (Cost Summary) to include shipping, freight, handling, professional installation, project management, HAR and applicable sales tax.

e. Preliminary Procurement Data Spec Sheets for each product indicating general appearance as well as proposed finish and fabric selections.

f. Furniture placement plans coded to the FF&E list and Procurement Data Spec Sheets.

g. Technical Specifications used in bid request for all furniture, fixtures and equipment etc.

h. Final Finish/Fabric Selections and Samples secuely attached to mat boards in 8" x 10" binder format using edge-reinforced, heavy-duty plastic sheet protectors for each board/sheet.

i. Copy of Quote(s)/Bill of Materials (BOM) on letterhead from the vendor(s) determined to be the best value. Code BOM line items to FF&E Cost Summary Item Codes.

1.5.7 Final FF&E Submittal

The Final FF&E submittal must be submitted 9 months prior to BOD following the receipt of review comments on the preliminary FF&E submittal and must include furniture, furnishings, artwork, and equipment and must be in the format described below.

The Final FF&E Submittal 3 ring binders are to have the submittal title identified on binder cover and spine. Five(5)binders are required for this

submittal; One (1) for the NAVFAC Interior Designer, and the Activity. Three to be shared between the FEAD/ROICC and IDD/Base Property.

a. Cover Title Page with project name, project #, submittal date.

b. Table of Contents.

c. Point of Contact List which includes contact info for recommended Best Value BPA Holder(s) vendors and subcontractors.

d. Final FF&E list (Cost Summary) to include shipping, handling, freight, professional installation, project management, HAR and any applicable sales tax.

e. Final Procurement Data Spec Sheets for each product indicating final finish and fabric selections.

f. Final Finish Selections and Memo Samples for the FF&E submitted in 8 x 10 binder format, using heavy-duty plastic sheet protectors.

g. Copy of Final Quote(s)/Bill of Materials (BOM) on letterhead from the vendor(s) determined to be the Best Value. Code BOM line items to FF&ECost Summary Item Codes.

h. FF&E Final Cost Comparison Spreadsheet

i. Best Value Determination Guidelines sheets; completed and signed by the Contactor's Interior Designer.

j. Final Furniture Placement Plans coded to the FF&E list, Procurement Data Sheets and specifications.

k. CD copy of the final FF&E binder.(ALL FINAL DOCUMENTS MUST BE "LIVE".)

1.5.8 Punch List:

Punch List Documents.

1.5.9 FF&E and Interior Finish Construction Submittals

Submit any revisions or deviations caused by discontinued items or NAVFAC required changes to the Contracting Officer for approval by the NAVFAC Interior Designer. All submittal due dates for the FF&E, A/V, and specialty equipment must be reflected in the Contractor's construction schedule. Changes to the FF&E schedule must be submitted to the government Interior Designer for approval. The Final FF&E package must be submitted no later than 9 months prior to the contract completion date.

1.6 BEST VALUE DETERMINATION

A Best Value Determination (BVD) is required by FAR 8.404 when placing orders against Federal Supply Schedules for the selection of furniture and furnishings. Best Value is defined in FAR 2.101 as ensuring that the order to be placed under a Federal Supply Schedule results in the lowest overall cost alternative (considering price, special features, administrative costs and client's needs) to meet the government's needs.

a. A (BVD) must be performed on a minimum of three manufacturers for orders exceeding a total procurement of $3000 from an individual

manufacturer. Multiple BVDs may be required in order to complete the final FF&Epackage.

b. The required quantity of BVD's to be performed will be determined by the NAVFAC Interior Designer during the design phase and is dependent on the appropriate NAVSUP BPA category(s) to be utilized and specific project requirements.

c. Documentation must be provided to the Government with the final FF&E package. Specific Documentation is indicated in the Preliminary BVA Submittal and "Over the Shoulder Review." The BVD Statement must be completed and signed by the contractor's interior designer.

The Prime Contractor's Interior Designer is responsible for the following written BVD justifications:

1.6.1 Total procurement of $3,000 or less

For any procurement in the FF&E package with a value of $3,000 or less, the Interior Designer may utilize any BPA holder. If the BPA holders cannot supply the item, then any other manufacturer may be utilized.

1.6.2 Total procurement greater than $3,000 and less than $150,000

For any procurement in the FF&E package with a value greater than $3,000 and $150,000 or less, the Prime Contractor's Interior Designer must always review pricing from at least three manufacturers as well as UNICOR. In addition to the review of published list prices, the Contractor's Interior Designer must confirm the pricing with the vendor. Manufacturer's quotes are NOT required. The BVD form must be completed and submitted for all FF&E procurements greater than $3,000 and $150,000 or less.

1.6.3 Total procurement greater than $150,000

From all BPA holders under the applicable group for FF&E procurements greater than $150,000, UNICOR must always be solicited. The Prime Contractor's Interior Designer must develop performance criteria and project requirements based on a generic design for the BPA holders and UNICOR to develop a price and performance proposal. The BVD form must be completed and submitted for all FF&E procurements greater than $100,000 and manufacturer's quotes and a summary of all proposals must be attached.

1.6.4 UNICOR

Federal Prison Industries (UNICOR) must be considered as part of all BVDs. This must be done by sending an email with the requirements and evaluation criteria. If they are not comparable in one or more areas of price, quality, and time of delivery, the designer can specify product under NAVSUP BPA or GSA schedule.

1.6.5 Evaluation Factors

The Best Value determination Determination must address issues such as:

a. Space planning; human factors data related to anthropometrics (reach, clearance, adjustability), space, and acoustics.

b. Ergonomics.

c. Product quality (including construction and materials); sustainability features, product warranties; history of the product and/or manufacturer.

d. Ability to service products through dealers or others within a certain geographical range of the project.

e. Price (including freight).

f. Aesthetics.

g. Appropriateness; and lighting, power and telecommunications systems management and/or coordination as related to the facility (when applicable); and other project specific factors as identified and/or required.

h. Emphasis must be to create a fully integrated design solution by providing quality products to meet the functional needs of the customer. Customer preferences must be considered. The focus must be on the best overall value. Use the NAVFAC Best Value Determination forms provided by the NAVFAC Interior Designer.

PART 2 FF&E TURNKEY EFFORT

2.1 FF&E PLANNED MODIFICATION

FF&E Planned Modification: As a planned modification, provide procurement and installation coordination of the complete and usable Final FF&E package. The FF&E Package must include shipping, freight, handling, installation and the Prime Contractor's FF&E Handling and Administration Rate (HAR) percentage as applied to the final FF&E total cost.

a. The Audio Visual (AV) Equipment will be funded as part of the FF&E Package as a planned modification. The A/V Equipment Package must include shipping, freight, handling, installation, applicable state sales tax, and the Prime Contractor's A/V Handling and Administration Rate (HAR) percentage as applied to the final A/V total cost (excluding taxes). The A/V package will be identified as a separate line item, and priced separately from the FF&E.

2.1.1 Authorization

The Government will provide separate funding for procurement and installation coordination of the FF&E package. Construction funds will not be used. Upon receipt of required funding, the Prime Contractor must be authorized by the Contracting Officer, as a planned modification to the construction contract, to procure and install all Final FF&E utilizing NAVSUP Blanket Purchase Agreements (BPA's), GSA schedules, and other Federal contracts and complying with priorities found in FAR Part 8.404. The Prime Contractor will be expected to procure and coordinate the installation of the approved Final FF&E package exactly as specified, or approved equal. The amount of the modification will be the actual cost of these items from the Federal Government price schedules (NAVSUP BPAs and/or GSA), including any freight and installation charges from the furniture supplier as well as the Prime Contractor's HAR and any applicable state sales tax. The HAR includes all of the Prime Contractor's effort related to storage, coordination, handling, administration of subcontractors, and all other associated costs and profit for the procurement of FF&E.

The Government will indicate the FF&E estimate based on the Concept Design in the contract solicitation Price Proposal Form (Bid Schedule). This Government estimate must not be altered by Prime Contractors during the bid process.

Prime Contractors must propose a Handling and Administration Rate (HAR) only. The Prime Contractor will propose the FF&E HAR in the contract solicitation. The Prime Contractor's proposed HAR may not exceed 5 percent of the total FF&E costs, as noted on the bid schedule. The HAR must not include costs associated with the Interior Design Services required in the Interior Design Services Option.

FF&E items are subject to the Buy American Act.

2.1.2 Procurement and Installation

The Prime Contractor must coordinate the building completion date with the installation dealer(s) specified in the FF&E Package. The Prime Contractor must anticipate possible manufacturer price increases if order placement is delayed. It is recommended to order the FF&E product once the planned modification is awarded and funds are received to avoid incurring additional costs. Delayed production and delivery dates can be noted at the time of order placement to coincide with the contract completion date. Any costs incurred due to manufacturer price increases will be the burden of the Prime Contractor.

2.1.3 Use of Blanket Purchase Agreements (BPA) and GSA Schedules

The Prime Contractor will receive a letter of authorization from the Contracting Officer citing the name of the furniture dealer(s) and other information to use when accessing the Federal Government supply sources.

2.1.4 Deposits

The Prime Contractor should anticipate providing a deposit of between 30 percent and 50 percent of the FF&E costs when placing the orders with the manufacturer's dealerships.

The Contractor must also anticipate possible manufacturer price increases. Recommend ordering FF&E product once funds are received to avoid incurring additional cost. Delayed production and delivery dates can be noted at the time of order placement to coincide with building completion dates. Any cost incurred due to manufacturer price increases will be the burden of the Contractor.

2.1.5 Davis Bacon Wages

Davis Bacon wages do not apply to the FF&E installer from the Government supply sources. The workforce for the FF&E installation and delivery must be separate and distinct from the labor workforce performing under the construction contract.

2.1.6 Sales Tax

The Prime Contractor must take maximum advantage of all exemptions from State and Local taxation authorities whether available to it directly or available to the Prime Contractor based on an exemption afforded the Government. The responsibility for paying applicable taxes rests with the

Prime Contractor. Any state and local taxes applicable to the FF&E must be included within the FF&E Dealer's quote. Any items purchased as building materials such as carpet are taxable.

2.1.7 Bonds

FF&E items are not considered construction and the prime contractor must not be required to secure any additional bond for the award of the FF&E line item unless otherwise indicated in the contract. If any additional bond is required for the FF&E line item it is to be included in the prime contractor's FF&E HAR.

2.1.8 Unique Item Identification (IUID) and Valuation

Unique item identification and valuation is a system of marking and valuing items delivered to DoD that enhances logistics, contracting, and financial business transactions. The IUID policy is mandatory for all DoD contracts that require the delivery of items. An item is a single article or a single unit formed by a grouping of subassemblies, components, or constituent parts. The Prime Contractor must provide DoD Unique item identification, valuation and delivery of data for all required FF&E items for which the government's unit acquisition cost is $5,000 or more.

PART 3 EXECUTION

3.1 Installation

The FF&E package includes the installation of all furniture and furnishings as specified in the FF&E package. The FF&E installation dealer(s) specified in the FF&E package must receive, store as required, transport to the project site, off load, inside deliver, unpack, assemble, place/install, clean, and dispose of all the trash for all furniture and furnishings. It is the Prime Contractor's responsibility to coordinate the building completion, occupancy, and furniture installation dates with the installation dealer(s) specified in the FF&E package. Any costs associated with or delaying furniture shipments is the responsibility of the Prime Contractor.

The Prime Contractor must provide and coordinate all Building Systems (HVAC, Plumbing, Fire Protection, Communications, Electrical, Data, Architectural, etc. with the furniture plans and furniture installation. All outlets, switches, thermostats, etc. must be fully accessible. All sprinkler heads, fire extinguishers, ADA, etc., clearances must be accommodated.

3.2 Installation Warranty

All movable furnishings must be installed in accordance with the manufacturer's instructions and warranty requirements. All movable furnishings must be level and aligned. All doors, drawers and accessories must be level and aligned to open, close and otherwise operate smoothly and securely.

All furniture must be installed by the furniture manufacturer's dealer of record and not the Prime Contractor. The Government reserves the right to approve/disapprove the Prime Contractor's FF&E installers. In addition, installation dealer(s) must be located within a 100 mile radius of the project site unless approved by the Government Interior Designer. The Prime Contractor must repair, to the Government's satisfaction, any/all

damage to any facility finish that is a result of the furniture installation and correct all punch list items for the furniture/furnishings. The Prime Contractor must obtain services of equipment specialists to install the electrical equipment, to include but not limited to televisions, Video Teleconference Equipment, ceiling mounted projectors, and mission essential electronic equipment included in the FF&E package.

3.3 Factory Ordering Documentation

After award of the FF&E package, three CD copies and one binder copy of all ordering documentation, including Factory Order number (FO) and warranty information for all products, must be provided to the Contracting Officer at the final FF&E walk-thru.

3.4 Post Award Changes

After award of the FF&E turnkey modification, any request to change the FF&E items must be submitted to the Contracting Officer. The FF&E turnkey modification will have been accepted, priced, and negotiated as detailed in the final package. Those items will have been agreed to considering color, specific type and quality of material, price, sustainability, life cycle, and dealership service. The Government will require the Prime Contractor to provide exactly those items. Should changes become necessary, careful consideration must be essential to assure that equivalent quality, price and other aspects of the item are maintained. Otherwise, price adjustments must be negotiated. Coordination with building finishes and other FF&E items is required for all proposed and approved substitutions. The Prime Contractor must obtain approval from the Contracting Officer and NAVFAC Interior Designer for any changes to the FF&E Package.

Post award FF&E manufacturer's price increases, beyond the pricing guarantee date, are the responsibility of the Prime Contractor and must not be transferred to the Government.

3.5 Punch List

The Contractor, his Interior Designer (and A/V consultant or other specialty consultants, if applicable) must attend at least two punch list site visit with the installation dealer(s), NAVFAC Interior Designer and the Base Representative/Activity Contact. The first site visit must identify all punch list items (at installation dealer's 98 percent completion) and the second (at 100 percent completion) will confirm that all punch list items have been resolved.3.6 Best Value Determination

A best value determination has been performed on the final FF&E package. A best value determination is required by FAR 8.404 when placing orders against Federal Supply Schedules for the selection of furniture and furnishings. Best Value is defined in FAR 2.101 as ensuring that the order to be placed under a Federal Supply Schedule results in the lowest overall cost alternative (considering price, special features, administrative costs and client's needs) to meet the government's needs.

-- End of Section --

THIS PAGE HAS BEEN INTENTIONALLY LEFT BLANK

SECTION 01 31 23.13 20

ELECTRONIC CONSTRUCTION AND FACILITY SUPPORT CONTRACT MANAGEMENT SYSTEM
05/17

PART 1 GENERAL

1.1 CONTRACT ADMINISTRATION

Utilize the Naval Facilities Engineering Command's (NAVFAC's) Electronic Construction and Facility Support Contract Management System (eCMS) for the transfer, sharing and management of electronic technical submittals and documents. The web-based eCMS is the designated means of transferring technical documents between the Contractor and the Government. Paper media or e-mail submission, including originals or copies, of the documents identified in Table 1 are not permitted, except where eCMS is unavailable or non-functional. Contact the Contracting Officer's Representative (COR) regarding availability of eCMS training and reference materials.

1.2 USER PRIVILEGES

The Contractor will be provided access to eCMS. All technical submittals and documents must be transmitted to the Government via the COR. Project roles and system roles will be established to control each user's menu, application, and software privileges, including the ability to create, edit, or delete objects.

1.3 SUBMITTALS

Government approval is required for submittals with a "G" designation; submittals not having a "G" designation are for Contractor Quality Control approval. Submit the following in accordance with Section 01 33 00 SUBMITTAL PROCEDURES:

SD-01 Preconstruction Submittals

List of Contractor's Personnel; G

1.4 SYSTEM REQUIREMENTS AND CONNECTIVITY

1.4.1 General

The eCMS requires a web-browser (platform-neutral) and Internet connection. Obtain from an approved vendor an External Certification Authority (ECA), Primary Key Infrastructure (PKI) certificate, or other similar digital identification to support two-factor authentication and access to eCMS. Provide and maintain computer hardware and software for the eCMS access throughout the duration of the contract for all Contractor-designated users. Provide connectivity, speed, bandwidth, and access to the Internet to ensure adequate functionality. Neither upgrading of the Contractor's computer system nor delays associated from the usage of the eCMS will be justification or grounds for a time extension or cost adjustment to the Contract.

1.4.2 Contractor Personnel List

Within 20 calendar days of contract award, provide to the Contracting

Officer a list of Contractor's personnel who will have the responsibility for the transfer, sharing and management of electronic technical submittals and documents and will require access to the eCMS. Project personnel roles to be filled in the eCMS include the Contractor's Project Manager, Superintendent, Quality Control (QC) Manager, and Site Safety and Health Officer (SSHO). Personnel must be capable of electronic document management. Notify the COR immediately of any personnel changes to the project. The Contracting Officer reserves the right to perform a security check on all potential users. Provide the following information:

First Name
Last Name
E-mail Address
Office Address
Project Role (e.g. Project Manager, QC Manager, Superintendent)

1.4.3 Field Administration

Provide a tablet computer with a Common Access Card (CAC) reader at the job site for Government use only. The tablet computer must have a web-browser, built-in camera, and cellular data connectivity. The tablet computer must be fully charged and made available at all times for Government use to facilitate the input of construction data at the job site. After completion of the work, reset the tablet computer to factory default settings. The tablet computer remains the property of the Contractor and must be removed from the site.

1.5 SECURITY CLASSIFICATION

In accordance with Department of Navy guidance, all military construction contract data are unclassified, unless specified otherwise by a properly designated Original Classification Authority (OCA) and in accordance with an established Security Classification Guide (SCG). Refer to the project's OCA when questions arise about the proper classification of information.

The eCMS and tablet computer must only be used for the transaction of unclassified information associated with construction projects. In conformance with the Freedom of Information Act (FOIA), Department of Defense Manual 5200.01-V4: DoD Information Security Program: Controlled Unclassified Information (CUI), and DoD requirements, any unclassified project documentation uploaded into the eCMS must be designated either "U - UNCLASSIFIED" (U) or "FOUO - UNCLASSIFIED-FOR OFFICIAL USE ONLY" (FOUO).

1.6 ECMS UTILIZATION

Establish, maintain, and update data and documentation in the eCMS throughout the duration of the contract.

1.6.1 Information Security Classification/Identification

The eCMS must be used for the transmittal of the following documents. This requirement supersedes conflicting requirements in other sections), however, submittal review times in Section 01 33 00 SUBMITTAL PROCEDURES remain applicable. Table 1 - Project Documentation Types provides the appropriate U and FOUO designations for various types of project documents. Construction documents requiring FOUO status must be marked accordingly. Apply the appropriate markings before any document is uploaded into eCMS. Markings are not required on U documents.

Table 1 also identifies which eCMS application is to be used in the transmittal of data (these are subject to change based on the latest software configuration). If a designated application is not functional within 4 hours of initial attempt, defer to the Submittal application and submit the required data as an uploaded portable document (e.g. PDF), word processor, spreadsheet, drawing, or other appropriate format. Hard copy or e-mail submission of these items is acceptable only if eCMS is documented to be not available or not functional. For Submittals, select the following:

Preparation by = Contractor personnel assigned to prepare the submittal
Approval by = Contracting Officer Representative (COR)
Returned by = Design Lead/Manager
Forwarded to = Contractor project manager

Table 1 - Project Documentation Types

SUBJECT/NAME	CLASS	REMARKS	ECMS APPLICATION
As-Built Drawings	U	Locations of sensitive areas must be labeled as either "Controlled Area" or "Restricted Area" and may be shown on unclassified documents with the approval from Site Security Manager	Document management, documents, submittals
Base Access Request/Approval	FOUO	1. Verify applicability with local installation security procedures via the Administrative Contracting Office 2. Redact Social Security Numbers (SSNs) prior to upload into eCMS, unless SSNs are required by the local security office to support security clearance investigations or verifications	Communications management, communications
Building Information Modeling (BIM)	U	1. Locations of sensitive areas must be labeled as either "Controlled Area" or "Restricted Area" and may be shown on unclassified documents with the approval from Site Security Manager 2. Design reviews will be performed in existing "Dr Checks"	Document management, documents, submittals
Construction Permits	U	Refer to rules of the issuing activity, state or jurisdiction	Document management, documents, submittals

SUBJECT/NAME	CLASS	REMARKS	ECMS APPLICATION
Construction Schedules (Activities and Milestones)	U	After the schedule submittal is approved by the COR, import the schedule file into the scheduling application, and select "Approve" to establish a new schedule baseline	Document management, documents, submittals
Construction Schedules (Cost-Loaded)	FOUO		Document management, documents, submittals
DD 1354 Transfer of Real Property	U		Document management, documents, submittals
Daily Production Reports	FOUO	Provide weather conditions, crew size, man-hours, equipment, and materials information	Site management, Daily Report
Daily Quality Control (QC) Reports	FOUO	Provide QC Phase, Definable Features of Work Identify visitors	Site management, Daily Report
Designs and Specifications	U	1. Locations of sensitive areas must be labeled as either "Controlled Area" or "Restricted Area" and may be shown on unclassified documents with the approval from Site Security Manager 2. Design reviews will be performed in existing "Dr Checks"	Document management, documents, submittals
Environmental Notice of Violation (NOV), Corrective Action Plan	U	Refer to rules of the issuing activity, state or jurisdiction	Document management, documents, submittals
Environmental Protection Plan (EPP)	FOUO		Document management, documents, submittals
Jobsite Documentation, Bulletin Board, Labor Laws, SDS	U		Document management, documents, submittals

SUBJECT/NAME	CLASS	REMARKS	ECMS APPLICATION
Meeting Minutes	FOUO		Communication management, meeting minutes
Operations & Maintenance Support Information (OMSI/eOMSI), Facility Data Worksheet	U	1. Locations of sensitive areas must be labeled as either "Controlled Area" or "Restricted Area" and may be shown on unclassified documents with the approval from Site Security Manager 2. Design reviews will be performed in existing "Dr Checks"	Document management, documents, submittals
Photographs	U	Subject to base/installation restrictions	Document management, documents, submittals
QCM Initial Phase Checklists	FOUO		Site management, Checklists
QCM Preparatory Phase Checklists	FOUO		Site management, Checklists
Quality Control Plans	FOUO		Document management, documents, submittals
QC Certifications	U		Document management, documents, submittals
QC Punch List	U		Site management, Punch lists
Red-Zone Checklist	U		Site management, Checklists
Rework Items List	FOUO		Site management, Punch lists
Request for Information (RFI) Post-Award	FOUO		Communications management, RFIs

SUBJECT/NAME	CLASS	REMARKS	ECMS APPLICATION
Safety Plan	FOUO		Site management, Daily Report
Safety - Activity Hazard Analyses (AHA)	FOUO		Site management, Daily Report
Safety - Mishap Reports	FOUO		Site management, Daily Report
SCIF/SAPF Accreditation Support Documents	FOUO	Note: Some Construction Security plans may be classified as Secret. Classified information must not be uploaded into eCMS. Refer to the Site Security Manager, as applicable.	Document management, documents, submittals
Shop Drawings	U	Locations of sensitive areas must be labeled as either "Controlled Area" or "Restricted Area" and may be shown on unclassified documents with the approval from Site Security Manager	Document management, documents, submittals
Storm Water Pollution Prevention (Notice of Intent - Notice of Termination)	U	Refer to rules of the issuing activity, state or jurisdiction	Document management, documents, submittals
Submittals and Submittal Log	U		Document management, documents, submittals
Testing Plans, Logs, and Reports	FOUO		Site management, QC inspection and testing plan
Training/Reference Materials	U		Document management, documents, submittals
Training Records (Personnel)	FOUO		Document management, documents, submittals

SUBJECT/NAME	CLASS	REMARKS	ECMS APPLICATION
Utility Outage/Tie-In Request/Approval	FOUO		Document management, documents, submittals
Warranties/BOD Letter	FOUO		Document management, documents, submittals
Quality Assurance Reports and Compliance Notices	FOUO		GOV ONLY
Other Government-prepared documents	FOUO		GOV ONLY
All Other Documents	FOUO	Refer to FOIA guidelines and contact the FOIA official to determine whether exemptions exist	As applicable

1.6.2 Markings on FOUO documents

a. Only FOUO documents being electronically uploaded into the eCMS (.docx, .xlsx, .pptx, .pdf, .jpg, .zip, and others as appropriate), and associated paper documents described in the paragraph CONTRACT ADMINISTRATION require FOUO markings as indicated in the subparagraphs below.

b. FOUO documents that are originally created within the eCMS application using the web-based forms (RFIs, Daily Reports, and others as appropriate) will be automatically watermarked by the eCMS software, and these do not require additional markings.

c. FOUO documents must be marked "UNCLASSIFIED//FOR OFFICIAL USE ONLY" at the bottom of the outside of the front cover (if there is one), the title page, the first page, and the outside of the back cover (if there is one).

d. FOUO documents must be marked on the internal pages of the document as "UNCLASSIFIED//FOR OFFICIAL USE ONLY"' at top and bottom.

e. Where Installations require digital photographs to be designated FOUO, place the markings on the face of the photograph.

f. For visual documentation, other than photographs and audio documentation, mark with either visual or audio statements as appropriate at both the beginning and end of the file.

PART 2 PRODUCTS

Not Used.

PART 3 EXECUTION

Not Used.

-- End of Section --

SECTION 01 32 17.00 20

NETWORK ANALYSIS SCHEDULES (NAS)
09/15

PART 1 GENERAL

1.1 DESCRIPTION

The Contractor is responsible for scheduling procurement, Contractor quality control and construction, acceptance testing and training. Refer to Specification Section 01 33 00 SUBMITTAL PROCEDURES to determine if any items require Government approval prior to construction; If any are required, that submittal review time shall be included in the schedule.

The schedule is a tool to manage the project, both for Contractor and Government activities. It will also be used to report progress and evaluate time extensions. If cost-loaded, it will provide the basis for progress payments.

The Contractor shall use the Critical Path Method (CPM) and the Precedence Diagram Method (PDM) to satisfy time and cost applications. For consistency, when scheduling software terminology is used in this specification, the terms in Primavera's scheduling programs are used.

1.2 SUBMITTALS

Government approval is required for submittals with a "G" designation; submittals not having a "G" designation are for Contractor Quality Control approval. Submit the following in accordance with Section 01 33 00 SUBMITTAL PROCEDURES:

SD-01 Preconstruction Submittals

Qualifications; G

Baseline Network Analysis Schedule (NAS); G

SD-07 Certificates

Monthly Network Analysis Schedule Update; G

SD-11 Closeout Submittals

As-Built Schedule; G

1.3 SCHEDULE ACCEPTANCE PRIOR TO START OF WORK

The Contracting Officer and Contractor shall participate in a preliminary meeting(s) to discuss the proposed schedule and requirements of this section prior to the Contractor preparing the Project Baseline Schedule.

Government review comments on the Contractor's schedule(s) shall not relieve the Contractor from compliance with requirements of the Contract Documents.

Only bonds shall be paid prior to acceptance of the Baseline Network Analysis Schedule (NAS).

The acceptance of a Baseline NAS is a condition precedent to:

a. The Contractor starting work on the demolition or construction stage(s) of the contract.

b. Processing Contractor's pay request(s) for construction activities/items of work.

c. Review of any schedule updates.

Submittal of the Baseline Network Analysis Schedule, and subsequent schedule updates, shall be understood to be the Contractor's certification that the submitted schedule meets all of the requirements of the Contract Documents, represents the Contractor's plan on how the work shall be accomplished, and accurately reflects the work that has been accomplished and how it was sequenced (as-built logic).

1.4 SOFTWARE

Project schedules must be prepared and maintained using Primavera P6 or current mandated scheduling program. Save files in Concentric P6 or current mandated scheduling program file format, compatible with the Governments version of the scheduling program. Importing data into P6/current mandated scheduling program using data conversion techniques or third party software will be cause for rejection of the submitted schedule.

1.5 QUALIFICATIONS

The designated Scheduler for the project shall have prepared and maintained at least 3 previous schedules of similar size and complexity as this contract using Primavera P3, Primavera SureTrak, or Primavera P6. A resume outlining the qualifications of the Scheduler shall be submitted for acceptance to the Contracting Officer. Payment will not be processed until an acceptable Scheduler is provided.

1.6 NETWORK SYSTEM FORMAT

The system shall include time scaled logic diagrams and specified reports.

1.6.1 Diagrams

Provide Time-scaled Logic Diagram printed in color on ANSI D size sheets. The diagram shall clearly show activities on the critical path. Critical path items must be red in color. Include the following information for each activity:

a. Activity ID

b. Activity Description

c. Original Duration in Work Days

d. Remaining duration

e. Percent Complete

f. Early Start Date

g. Early Finish Date

h. Total Float

1.6.2 Schedule Activity Properties and Level of Detail

The NAS shall identify all Government, Construction Quality Management (CQM), Construction activities planned for the project and all other activities that could impact project completion if delayed. Separate activities shall be created for each Phase, Area, Floor Level and Location the activity is occurring. Activity categories included in the schedule are specified below.

With the exception of the Contract Award and Contract Completion Date (CCD) milestone activities, no activity shall be open-ended; each activity shall have predecessor and successor ties. Once an activity exists on the schedule it may not be deleted or renamed to change the scope of the activity and shall not be removed from the schedule logic without approval from the Contracting Officer. The ID number for a deleted activity shall not be re-used for another activity. No more than 20 percent of the activities shall be critical or near critical. Critical is defined as having zero days of Total Float. "Near Critical" is defined as having Total Float of 1 to 14 days. Contractor activities shall be driven by calendars that reflect Saturdays, Sundays and all Federal Holidays as non-work days.

1.6.2.1 Activity Categories

a. Procurement Activities: Examples of procurement activities include, but are not limited to; Material/equipment submittal preparation, submittal and approval of material/equipment; material/equipment fabrication and delivery, and material/equipment on-site. As a minimum, separate procurement activities will be provided for critical items, long lead items, items requiring government approval and material/equipment procurement for which payment will be requested in advance of installation. The Contractor shall show each delivery with relationship tie to the Construction Activity specifically for the delivery.

b. Government Activities: Government and other agency activities that could impact progress shall be clearly identified. Government activities include, but are not limited to; Government approved submittal reviews, Government conducted inspections/tests, environmental permit approvals by State regulators, utility outages, Design Start, Construction Start, (including Design/Construction Start for each Fast-Track Phase, and delivery of Government Furnished Material/Equipment.

c. Construction Quality Management (CQM) Activities: CQM Activities shall identify the Preparatory Phase and Initial Phase for each Definable Feature of Work identified in the Contractor's Quality Control Plan. These activities shall be added to each Three-Week Look Ahead Schedule referenced in the paragraph entitled "THREE-WEEK LOOK AHEAD SCHEDULE" and will also be included in each monthly update. The Follow-up Phase will be represented by the Construction Activities in the Baseline Schedule and in the schedule updates.

d. Construction Activities: No on-site construction activity shall have a duration in excess of 20 working days. Separate construction

activities shall be created for each Phase, Area, Floor Level and Location the activity is occurring. Contractor activities will be driven by calendars that reflect Saturdays, Sundays and all Federal Holidays as non-work days, unless otherwise defined in this contract.

e. Turnover and Closeout Activities: Include a separate section with all items on the Facility Turnover Checklist that are applicable to this project. The checklist will be provided at the Preconstruction Meeting. As a minimum, this will include all testing, specialized inspection activities, Pre-Final inspection, Punch List Completion, Final Inspection and Acceptance. Add a milestone for the Facility Turnover Planning Meeting at approximately 75 percent construction contract completion or three to six months prior to BOD, whichever is sooner.

1.6.2.2 Contract Milestones and Constraints

a. Project Start Date Milestones: The Contractor shall include as the first activity on the schedule a start milestone titled "Contract Award", which shall have a Mandatory Start constraint equal to the Contract Award Date.

b. Projected Completion Milestone: The Contractor shall include an unconstrained finish milestone on the schedule titled "Projected Completion". Projected Completion is defined as the point in time the Government would consider the project complete and ready for its intended use. This milestone shall have the Contract Completion (CCD) milestone as its only successor.

c. Contract Completion Date (CCD) Milestone: The Contractor shall include as the last activity on the schedule a finish milestone titled "Contract Completion (CCD)", which shall have a Mandatory Finish constraint equal to the current Contract Completion Date. Calculation of schedule updates shall be such that if the finish of the "Projected Completion" milestone falls after the contract completion date, then negative float will be calculated on the longest path and if the finish of the "Projected Completion" milestone falls before the contract completion date, the float calculation shall reflect positive float on the longest path. The only predecessor to the Contract Completion Date Milestone shall be the Projected Completion milestone.

1.6.2.3 Activity Code

At a minimum, the Contractor shall establish activity codes identified in this specification and 3 additional activity codes identified by the Contracting Officer. Once established, activity codes and values cannot be changed without approval by the Contracting Officer.

a. Phase: All activities shall be assigned a 4-digit code value based on the contract phase it occurs in.

b. Area Code: All activities shall be assigned an area code value identifying the Area in which the activity occurs. Activities shall not belong to more than one area. Area is defined as a distinct space, function or activity category; such as, separate structure(s), sitework, project summary, construction quality management, material/equipment procurement, etc.

c. Work Item: All activities in the project schedule shall be assigned a

4-digit Work Item code value. Examples of Work Item code values include but are not limited to water lines, drain lines, building pad and foundation, slab on grade, walls and columns, suspended slab, roof structure, roofing, exterior finish systems, interior rough-in, and finishes, etc.

d. Location 1: Assign a 4-digit Location 1 code value to activities associated with multistory structures. Code values are used to identify the floor level where an activity is occurring.

e. Location 2: Assign a 4-digit Location 2 code value to all activities to identify the location within an Area, Work Item or Building Level that an activity is occurring.

f. Responsibility Code: All activities in the project schedule shall be identified with the party responsible for completing the task. Activities shall not belong to more than one responsible party.

1.6.2.4 Anticipated Weather Delays

The Contractor shall use the National Oceanic and Atmospheric Administration's (NOAA) historical monthly averages for the NOAA location closest to the project site as the basis for establishing a "Weather Calendar" showing the number of anticipated non-workdays for each month due to adverse weather, Saturdays, Sundays and all Federal Holidays as non-work days.

Assign the Weather Calendar to any activity that could be impacted by adverse weather. The Contracting Officer will issue a modification in accordance with the contract clauses, giving the Contractor a time extension for the difference of days between the anticipated and actual adverse weather delay if the number of actual adverse weather delay days exceeds the number of days anticipated for the month in which the delay occurs and the adverse weather delayed activities critical to contract completion. A lost workday due to weather conditions is defined as a day in which the Contractor cannot work at least 50 percent of the day on the impacted activity.

1.6.2.5 Cost Loading

a. Cost Loading Activities: Material and Equipment Costs for which payment will be requested in advance of installation shall be assigned to their respective procurement activity (i.e., the material/equipment on-site activity). All other construction costs shall be assigned to their respective Construction Activities. The value of inspection/testing activities will not be less than 10 percent of the total costs for Procurement and Construction Activities. Evenly disperse overhead and profit to each activity over the duration of the project.

b. Quantities and Units of Measure: Each cost loaded activity shall have a detailed quantity breakdown and unit of measure.

1.6.3 Schedule Software Settings and Restrictions

a. Activity Constraints: Date/time constraint(s), other than those required by the contract, will not be allowed unless accepted by the Contracting Officer. Identify any constraints proposed and provide an explanation for the purpose of the constraint in the Narrative Report.

b. Default Progress Data Disallowed: Actual Start and Actual Finish dates on the CPM schedule shall match the dates on the Contractor Quality Control and Production Reports.

c. Software Settings: Schedule calculations and Out-of-Sequence progress (if applicable) shall be handled through Retained Logic, not Progress Override. All activity durations and float values will be shown in days. Activity progress will be shown using Remaining Duration. Default activity type will be set to "Task". The project "Must Finish By" date shall be left blank.

1.6.4 Required Tabular Reports

The following reports shall be included with the schedule submittal:

a. Log Report: Listing of all changes made between the previous schedule and current updated schedule.

b. Narrative Report: Identify and justify; 1) Progress made in each area of the project; 2) Critical Path; 3) Date/time constraint(s), other than those required by the contract 3) Changes in the following; added or deleted activities, original and remaining durations for activities that have not started, logic, milestones, planned sequence of operations, critical path, and cost loading; 4) Any decrease in previously reported activity Earned Amount; 5) Pending items and status thereof, including permits, changes orders, and time extensions; 6) Status of Contract Completion Date and interim milestones; 7) Current and anticipated delays (describe cause of delay and corrective actions(s)); and 8) Description of current and future schedule problem areas. Each entry in the narrative report will cite the respective Activity ID and Activity Description, the date and reason for the change, and description of the change.

c. Earned Value Report: Listing all activities having a budget amount cost loaded. Compilation of total earnings on the project from notice to proceed to current progress payment request. Group and sort activities as directed by the Contracting Officer. Show current budget, previous physical percent complete, to-date physical percent complete, previous earned value, to-date earned value and cost to complete on the report for each activity:

d. Schedule Variance Control (SVC) Diagram: With each schedule submission, provide a SVC diagram showing 1) Cash Flow S-Curves indicating planned project cost based on projected early and late activity finish dates and 2) Earned Value to-date. Revise Cash Flow S-Curves when the contract is modified, or as directed by the Contracting Officer.

1.7 SUBMISSION AND ACCEPTANCE

1.7.1 Monthly Network Analysis Updates

Contractor and Government representatives shall meet at monthly intervals to review and agree on the information presented in the updated project schedule. The submission of an acceptable, updated schedule to the Government is a condition precedent to the processing of the Contractor's pay request. If a Schedule of Prices is the basis for progress payments, it shall be consistent with the logic and activity breakdowns on the

progress schedule. If progress payments are based on a cost-loaded schedule, the Contractor and Government shall agree on percentage of payment for each activity progressed during the update period.

Provide the following with each Schedule submittal:

a. Time Scaled Logic Diagram.

b. Reports listed in paragraph entitled "Required Tabular Reports."

c. Data disks containing the project schedule. Include the back-up native .prx/current mandated schedule program files.

1.7.2 As-Built Schedule

As a condition precedent to the release of retention and making final payment, submit an "As-Built Schedule," as the last schedule update showing all activities at 100 percent completion. This schedule shall reflect the exact manner in which the project was actually constructed.

1.8 CONTRACT MODIFICATION

Submit a Time Impact Analysis with each cost and time proposal for a proposed change. Time Impact Analysis (TIA) shall illustrate the influence of each change or delay on the Contract Completion Date or milestones. No time extensions will be granted nor delay damages paid unless a delay occurs which consumes all available Project Float, and extends the Projected Finish beyond the Contract Completion Date.

a. Each TIA shall be in both narrative and schedule form demonstrating the delay impact. The TIA shall identify the predecessors to the new activities and demonstrate the impacts to successor activities. The Contractor shall run the schedule calculations and submit the impacted schedule with the proposal or claim.

b. The TIA schedule submitted with the proposal shall show all activity progress as of the date of the proposal. If the impact to the schedule occurs prior to the proposal submission, the TIA schedule shall be updated to show all activity progress as of the time of the impact. If the proposed change does not impact the CCD, no TIA shall be required.

c. Submit Data disks containing the TIA schedule. Include the back-up native .prx/current mandated schedule program files.

d. Unless the Contracting Officer requests otherwise, only conformed contract modifications shall be added into the Project NAS.

1.9 PROJECT FLOAT

Project Float is the length of time between the Contractor's Projected Finish Milestone and the Contract Completion Date Milestone. Project Float available in the schedule, at any time shall not be for the exclusive use of either the Government or the Contractor.

1.10 THREE-WEEK LOOK AHEAD SCHEDULE

The Contractor shall prepare and issue a 3-Week Look Ahead schedule to provide a more detailed day-to-day plan of upcoming work identified on the

Project Network Analysis Schedule. The work plans shall be keyed to NAS activity numbers and updated each week to show the planned work for the current and following two-week period. Additionally, include upcoming outages, closures, preparatory meetings, and initial meetings. Identify critical path activities on the Three-Week Look Ahead Schedule. The detail work plans are to be bar chart type schedules, maintained separately from the Project NAS on an electronic spreadsheet program and printed on 8 ½ by 11 sheets as directed by the Contracting Officer. Activities shall not exceed 5 working days in duration and have sufficient level of detail to assign crews, tools and equipment required to complete the work. Three hard copies and one electronic file of the 3-Week Look Ahead Schedule shall be delivered to the Contracting Officer no later than 8 a.m. each Monday and reviewed during the weekly CQC Coordination Meeting.

PART 2 PRODUCTS

Not used.

PART 3 EXECUTION

Not used.

-- End of Section --

SECTION 01 33 00

SUBMITTAL PROCEDURES
11/15

PART 1 GENERAL

1.1 DEFINITIONS

1.1.1 Submittal Descriptions (SD)

Submittals requirements are specified in the technical sections. Submittals are identified by Submittal Description (SD) numbers and titles as follows:

SD-01 Preconstruction Submittals

Submittals which are required prior to commencing work on site.

Certificates of insurance

Surety bonds

List of proposed Subcontractors

List of proposed products

Construction Progress Schedule

Network Analysis Schedule (NAS)

Submittal register

Schedule of prices

Health and safety plan

Work plan

Quality control(QC) plan

Environmental protection plan

SD-02 Shop Drawings

Drawings, diagrams and schedules specifically prepared to illustrate some portion of the work.

Diagrams and instructions from a manufacturer or fabricator for use in producing the product and as aids to the Contractor for integrating the product or system into the project.

Drawings prepared by or for the Contractor to show how multiple systems and interdisciplinary work will be coordinated.

SD-03 Product Data

Catalog cuts, illustrations, schedules, diagrams, performance charts,

instructions and brochures illustrating size, physical appearance and other characteristics of materials, systems or equipment for some portion of the work.

Samples of warranty language when the contract requires extended product warranties.

SD-04 Samples

Fabricated or unfabricated physical examples of materials, equipment or workmanship that illustrate functional and aesthetic characteristics of a material or product and establish standards by which the work can be judged.

Color samples from the manufacturer's standard line (or custom color samples if specified) to be used in selecting or approving colors for the project.

Field samples and mock-ups constructed on the project site establish standards by which the ensuring work can be judged. Includes assemblies or portions of assemblies which are to be incorporated into the project and those which will be removed at conclusion of the work.

SD-05 Design Data

Design calculations, mix designs, analyses or other data pertaining to a part of work.

SD-06 Test Reports

Report signed by authorized official of testing laboratory that a material, product or system identical to the material, product or system to be provided has been tested in accord with specified requirements. (Testing must have been within three years of date of contract award for the project.)

Report which includes findings of a test required to be performed by the Contractor on an actual portion of the work or prototype prepared for the project before shipment to job site.

Report which includes finding of a test made at the job site or on sample taken from the job site, on portion of work during or after installation.

Investigation reports.

Daily logs and checklists.

Final acceptance test and operational test procedure.

SD-07 Certificates

Statements printed on the manufacturer's letterhead and signed by responsible officials of manufacturer of product, system or material attesting that product, system or material meets specification requirements. Must be dated after award of project contract and clearly name the project.

Document required of Contractor, or of a manufacturer, supplier,

installer or Subcontractor through Contractor, the purpose of which is to further quality of orderly progression of a portion of the work by documenting procedures, acceptability of methods or personnel qualifications.

Confined space entry permits.

Text of posted operating instructions.

SD-08 Manufacturer's Instructions

Preprinted material describing installation of a product, system or material, including special notices and (MSDS)concerning impedances, hazards and safety precautions.

SD-09 Manufacturer's Field Reports

Documentation of the testing and verification actions taken by manufacturer's representative at the job site, in the vicinity of the job site, or on a sample taken from the job site, on a portion of the work, during or after installation, to confirm compliance with manufacturer's standards or instructions. The documentation must be signed by an authorized official of a testing laboratory or agency and must state the test results; and indicate whether the material, product, or system has passed or failed the test.

Factory test reports.

SD-10 Operation and Maintenance Data

Data that is furnished by the manufacturer, or the system provider, to the equipment operating and maintenance personnel, including manufacturer's help and product line documentation necessary to maintain and install equipment. This data is needed by operating and maintenance personnel for the safe and efficient operation, maintenance and repair of the item.

This data is intended to be incorporated in an operations and maintenance manual or control system.

SD-11 Closeout Submittals

Documentation to record compliance with technical or administrative requirements or to establish an administrative mechanism.

Special requirements necessary to properly close out a construction contract. For example, Record Drawings and as-built drawings. Also, submittal requirements necessary to properly close out a major phase of construction on a multi-phase contract.

Interim "DD Form 1354" with cost breakout for all assets 30 days prior to facility turnover.

1.1.2 Approving Authority

Office or designated person authorized to approve submittal.

1.1.3 Work

As used in this section, on- and off-site construction required by contract documents, including labor necessary to produce submittals, construction, materials, products, equipment, and systems incorporated or to be incorporated in such construction.

1.2 SUBMITTALS

Government approval is required for submittals with a "G" designation; submittals not having a "G" designation are for Contractor QC approval. Submittals with an "S" are for inclusion in the Sustainability Notebook, in conformance to Section 01 33 29 SUSTAINABILITY REQUIREMENTS. Submit the following in accordance with this section.

SD-01 Preconstruction Submittals

Submittal register; G

1.3 SUBMITTAL CLASSIFICATION

Submittals are classified as follows:

1.3.1 Government Approved G

Government approval is required for extensions of design, critical materials, deviations, equipment whose compatibility with the entire system must be checked, and other items as designated by the Contracting Officer. Within the terms of the Contract Clause entitled, "Specifications and Drawings for Construction," they are considered to be "shop drawings."

On submittals indicated as G, ID, these submittals shall to be reviewed and approved by NAVFAC MidLant Interior Design.

1.3.1.1 Information Only

Submittals not requiring Government approval will be for information only. They are not considered to be "shop drawings" within the terms of the Contract Clause referred to above.

1.3.1.2 Sustainability Submittals (S)

Submittals for Guiding Principle Validation (GPV) or Third Party Certification (TPC) are indicated with an "S" designation. Submit the information required by the technical sections that demonstrates compliance with the sustainable requirement, and for inclusion in the Sustainability Notebook as required by Section 01 33 29 SUSTAINABILITY REQUIREMENTS. If the submittal is also provided under another another SD, provide a separate submittal under SD-11 that only provides that portion of the submittal that demonstrates compliance with the sustainable requirement. Schedule submittals for these items throughout the course of construction as provided; do not wait until closeout.

1.4 FORWARDING SUBMITTALS REQUIRING GOVERNMENT APPROVAL

1.4.1 Submittals Required from the Contractor

As soon as practicable after award of contract, and before procurement of fabrication, forward to NAVFAC MID-LANT MCIPT, Attn: Scott Littlefield, Code OPQC15, Marine Corps IPT, 9324 Virginia Avenue, Norfolk, Virginia,

23511-3095 Architect-Engineer: MC-IPT MIDLANT NAVFAC submittals required in the technical sections of this specification, including shop drawings, product data and samples. One copy of the transmittal form for all submittals shall be forwarded to the Resident Officer in Charge of Construction (ROICC)Facilities Engineering and Acquisition Division (FEAD).

Marine Corps North Carolina IPT will review and approve for the Contracting Officer those submittals reserved for Contracting Officer approval to verify submittals comply with the contract requirements.

1.4.1.1 O&M Data

Marine Corps North Carolina IPT will review and approve for the Contracting Officer O&M Data to verify the submittals comply with the contract requirements; submit data specified for a given item within 30 calendar days after the item is delivered to the contract site.

a. In the event the Contractor fails to deliver O&M Data within the time limits specified, the Contracting Officer may withhold from progress payments 50 percent of the price of the item with which such O&M Data are applicable.

1.4.1.2 Submittals Not Requiring Government Approval Or Surveillance

Construction submittals not requiring Government approval or surveillance shall be submitted for information.

1.5 PREPARATION

1.5.1 Transmittal Form

Transmit each submittal, except sample installations and sample panels to office of approving authority. Transmit submittals with transmittal form prescribed by Contracting Officer and standard for project. On the transmittal form identify Contractor, indicate date of submittal, and include information prescribed by transmittal form and required in paragraph entitled, "Identifying Submittals," of this section. Process transmittal forms to record actions regarding sample installations or panels.

1.5.2 Identifying Submittals

When submittals are provided by a subcontractor, the Prime Contractor is to prepare, review and stamp with Contractor's approval all specified submittals prior to submitting for Government approval.

Identify submittals, except sample installations and sample panels, with the following information permanently adhered to or noted on each separate component of each submittal and noted on transmittal form. Mark each copy of each submittal identically, with the following:

a. Project title and location.

b. Construction contract number.

c. Date of the drawings and revisions.

d. Name, address, and telephone number of subcontractor, supplier, manufacturer and any other subcontractor associated with the submittal.

e. Section number of the specification section by which submittal is required.

f. Submittal description (SD) number of each component of submittal.

g. When a resubmission, add alphabetic suffix on submittal description, for example, submittal 18 would become 18A, to indicate resubmission.

h. Product identification and location in project.

1.5.3 Electronic Submittals

Construction Submittals for this project shall be made electronically utilizing software provided by the Contractor and approved by the Government and the DOR. Electronic Working and Record Drawings shall be submitted in accordance with specification section 01 78 00 CLOSEOUT SUBMITTALS. Provide eOMSI submittals in accordance with specification section 01 78 24.00 20 FACILITY ELECTRONIC OPERATION AND MAINTENANCE SUPPORT INFORMATION (eOMSI).

1.5.3.1 Identification and Information

Identify and incorporate information in each electronic submittal file as follows:

a. Assemble complete submittal package into a single indexed electronic file incorporating submittal requirements of a single Specification Section and transmittal form with links enabling navigation to each item.

b. Name file with the project identifier and Specification Section number, and submittal number, including revision identifier if required as follows:

   File name shall use project P-number followed by a dash, the six or ten digit Specification Section number followed by a dash, and then a sequential number (e.g., P601-04 20 00-001 or P601-07 21 00.00 20-001). Resubmittals shall include an alphabetic suffix after the sequential number (e.g., P601-04 20 00-001A or P601-07 21 00.00 20-001A).

1.5.3.2 General Electronic Submittal Procedure Requests

Post electronic submittals as PDF electronic files directly to Contractor's project electronic site specifically established for the Project.

a. DOR will post electronic annotated files.

b. Contractor shall annotate and retain one copy of file as an electronic Project record document file.

c. Contractor shall maintain three (3) hard copies of all submittals: one copy to be maintained in the field during construction, one for the Construction Management Engineer (CME) office, and one for the contract files.

d. Contractor shall provide upon completion of the project, CDs which

have all reviewed and marked up submittals for the project.

1.5.4 Format for SD-02 Shop Drawings

a. Shop drawings are not to be less than 8 1/2 by 11 inches nor more than 30 by 42 inches, except for full size patterns or templates. Prepare drawings to accurate size, with scale indicated, unless other form is required. Drawings are to be suitable for reproduction and be of a quality to produce clear, distinct lines and letters with dark lines on a white background.

b. Present 8 1/2 by 11 inches sized shop drawings as part of the bound volume for submittals required by section. Present larger drawings in sets.

c. Include on each drawing the drawing title, number, date, and revision numbers and dates, in addition to information required in paragraph entitled "Identifying Submittals."

d. Number drawings in a logical sequence. Contractors may use their own number system. Each drawing is to bear the number of the submittal in a uniform location adjacent to the title block. Place the Government contract number in the margin, immediately below the title block, for each drawing.

e. Reserve a blank space, no smaller than 4 inches square on the right hand side of each sheet for the Government disposition stamp.

f. Dimension drawings, except diagrams and schematic drawings; prepare drawings demonstrating interface with other trades to scale. Use the same unit of measure for shop drawings as indicated on the contract drawings. Identify materials and products for work shown.

g. Include the nameplate data, size and capacity on drawings. Also include applicable federal, military, industry and technical society publication references.

1.5.5 Format of SD-03 Product Data and SD-08 Manufacturer's Instructions

a. Present product data submittals for each section as a complete, bound volume. Include table of contents, listing page and catalog item numbers for product data.

b. Indicate, by prominent notation, each product which is being submitted; indicate specification section number and paragraph number to which it pertains.

c. Supplement product data with material prepared for project to satisfy submittal requirements for which product data does not exist. Identify this material as developed specifically for project, with information and format as required for submission of SD-07 Certificates.

e. Include the manufacturer's name, trade name, place of manufacture, and catalog model or number on product data. Also include applicable federal, military, industry and technical society publication references. Should manufacturer's data require supplemental information for clarification, submit as specified for SD-07 Certificates.

f. Where equipment or materials are specified to conform to industry and technical society reference standards of the organizations such as American National Standards Institute (ANSI), ASTM International (ASTM), National Electrical Manufacturer's Association (NEMA), Underwriters Laboratories (UL), and Association of Edison Illuminating Companies (AEIC), submit proof of such compliance. The label or listing by the specified organization will be acceptable evidence of compliance. In lieu of the label or listing, submit a certificate from an independent testing organization, competent to perform testing, and approved by the Contracting Officer. State on the certificate that the item has been tested in accordance with the specified organization's test methods and that the item complies with the specified organization's reference standard.

g. Collect required data submittals for each specific material, product, unit of work, or system into a single submittal and marked for choices, options, and portions applicable to the submittal. Mark each copy of the product data identically. Partial submittals will not be accepted for expedition of construction effort.

h. Submit manufacturer's instructions prior to installation.

1.5.6 Format of SD-04 Samples

a. Furnish samples in sizes below, unless otherwise specified or unless the manufacturer has prepackaged samples of approximately same size as specified:

(1) Sample of Equipment or Device: Full size.

(2) Sample of Materials Less Than 2 by 3 inches: Built up to 8 1/2 by 11 inches.

(3) Sample of Materials Exceeding 8 1/2 by 11 inches: Cut down to 8 1/2 by 11 inches and adequate to indicate color, texture, and material variations.

(4) Sample of Linear Devices or Materials: 10 inch length or length to be supplied, if less than 10 inches. Examples of linear devices or materials are conduit and handrails.

(5) Sample of Non-Solid Materials: Pint. Examples of non-solid materials are sand and paint.

(6) Color Selection Samples: 2 by 4 inches. Where samples are specified for selection of color, finish, pattern, or texture, submit the full set of available choices for the material or product specified. Sizes and quantities of samples are to represent their respective standard unit.

(7) Sample Panel: 4 by 4 feet.

(8) Sample Installation: 100 square feet.

b. Samples Showing Range of Variation: Where variations in color, finish, pattern, or texture are unavoidable due to nature of the materials, submit sets of samples of not less than three units showing extremes and middle of range. Mark each unit to describe its relation

to the range of the variation.

c. Reusable Samples: Incorporate returned samples into work only if so specified or indicated. Incorporated samples are to be in undamaged condition at time of use.

d. Recording of Sample Installation: Note and preserve the notation of area constituting sample installation but remove notation at final clean up of project.

e. When color, texture or pattern is specified by naming a particular manufacturer and style, include one sample of that manufacturer and style, for comparison.

1.5.7 Format of SD-05 Design Data and SD-07 Certificates

Provide design data and certificates on 8 1/2 by 11 inches paper. Provide a bound volume for submittals containing numerous pages.

1.5.8 Format of SD-06 Test Reports and SD-09 Manufacturer's Field Reports

a. Provide reports on 8 1/2 by 11 inches paper in a complete bound volume.

b. Indicate by prominent notation, each report in the submittal. Indicate specification number and paragraph number to which it pertains.

1.5.9 Format of SD-10 Operation and Maintenance Data (O&M)

Comply with the requirements specified in Section 01 78 23 OPERATION AND MAINTENANCE DATA and 01 78 24.00 20 FACILITY ELECTRONIC OPERATION AND MAINTENANCE SUPPORT INFORMATION (eOMSI)for O&M Data format.

1.5.10 Format of SD-01 Preconstruction Submittals and SD-11 Closeout Submittals

When submittal includes a document which is to be used in project or become part of project record, other than as a submittal, do not apply Contractor's approval stamp to document, but to a separate sheet accompanying document.

1.6 QUANTITY OF SUBMITTALS

1.6.1 Number of Copies of SD-02 Shop Drawings

Submit six copies of submittals of shop drawings requiring review and approval only by QC organization and seven copies of shop drawings requiring review and approval by Contracting Officer.

1.6.2 Number of Copies of SD-03 Product Data and SD-08 Manufacturer's Instructions

Submit in compliance with quantity requirements specified for shop drawings.

1.6.3 Number of Samples SD-04 Samples

a. Submit two samples, or two sets of samples showing range of variation, of each required item. One approved sample or set of samples will be

retained by approving authority and one will be returned to Contractor.

b. Submit one sample panel or provide one sample installation where directed. Include components listed in technical section or as directed.

c. Submit one sample installation, where directed.

d. Submit one sample of non-solid materials.

1.6.4 Number of Copies SD-05 Design Data and SD-07 Certificates

Submit in compliance with quantity requirements specified for shop drawings.

1.6.5 Number of Copies SD-06 Test Reports and SD-09 Manufacturer's Field Reports

Submit in compliance with quantity and quality requirements specified for shop drawings other than field test results that will be submitted with QC reports.

1.6.6 Number of Copies of SD-10 Operation and Maintenance Data

Submit Five copies of O&M Data to the Contracting Officer for review and approval.

1.6.7 Number of Copies of SD-01 Preconstruction Submittals and SD-11 Closeout Submittals

Unless otherwise specified, submit two sets of administrative submittals.

1.6.8 Quantity of Submittals for Information

Submit two copies of submittals for information to the Contracting Officer.

1.7 INFORMATION ONLY SUBMITTALS

Normally submittals for information only will not be returned. Approval of the Contracting Officer is not required on information only submittals. The Government reserves the right to require the Contractor to resubmit any item found not to comply with the contract. This does not relieve the Contractor from the obligation to furnish material conforming to the plans and specifications; will not prevent the Contracting Officer from requiring removal and replacement of nonconforming material incorporated in the work; and does not relieve the Contractor of the requirement to furnish samples for testing by the Government laboratory or for check testing by the Government in those instances where the technical specifications so prescribe.

1.8 VARIATIONS

Variations from contract requirements require both Designer of Record (DOR) and Government approval pursuant to contract Clause FAR 52.236-21 and will be considered where advantageous to Government.

1.8.1 Considering Variations

Discussion with Contracting Officer prior to submission, after consulting

with the DOR, will help ensure functional and quality requirements are met and minimize rejections and re-submittals. When contemplating a variation which results in lower cost, consider submission of the variation as a Value Engineering Change Proposal (VECP).

Specifically point out variations from contract requirements in transmittal letters. Failure to point out deviations may result in the Government requiring rejection and removal of such work at no additional cost to the Government.

1.8.2 Proposing Variations

When proposing variation, deliver written request to the Contracting Officer, with documentation of the nature and features of the variation and why the variation is desirable and beneficial to Government, including the DOR's written analysis and approval. If lower cost is a benefit, also include an estimate of the cost savings. In addition to documentation required for variation, include the submittals required for the item. Clearly mark the proposed variation in all documentation.

1.8.3 Warranting That Variations Are Compatible

When delivering a variation for approval, Contractor, including its Designer(s) of Record, warrants that this contract has been reviewed to establish that the variation, if incorporated, will be compatible with other elements of work.

1.8.4 Review Schedule Is Modified

In addition to normal submittal review period, a period of 10 working days will be allowed for consideration by the Government of submittals with variations.

1.9 SUBMITTAL REGISTER

Prepare and maintain submittal register, as the work progresses. Do not change data which is output in columns (c), (d), (e), and (f) as delivered by Government; retain data which is output in columns (a), (g), (h), and (i) as approved. A submittal register showing items of equipment and materials for which submittals are required by the specifications is provided as an attachment. This list may not be all inclusive and additional submittals may be required. The Government will provide the initial submittal register with the following fields completed, to the extent that will be required by the Government during subsequent usage. The Government provided submittal register will be in the form of a pdf file.

Column (c): Lists specification section in which submittal is required.

Column (d): Lists each submittal description (SD No. and type, e.g. SD-02 Shop Drawings) required in each specification section.

Column (e): Lists one principal paragraph in specification section where a material or product is specified. This listing is only to facilitate locating submitted requirements. Do not consider entries in column (e) as limiting project requirements.

Column (f): Indicate approving authority for each submittal.

Thereafter, the Contractor is to track all submittals by maintaining a complete list, including completion of all data columns, including dates on which submittals are received and returned by the Government.

1.9.1 Use of Submittal Register

Submit submittal register. Submit with QC plan and project schedule. Verify that all submittals required for project are listed and add missing submittals. Coordinate and complete the following fields on the register submitted with the QC plan and the project schedule:

Column (a) Activity Number: Activity number from the project schedule.

Column (g) Contractor Submit Date: Scheduled date for approving authority to receive submittals.

Column (h) Contractor Approval Date: Date Contractor needs approval of submittal.

Column (i) Contractor Material: Date that Contractor needs material delivered to Contractor control.

1.9.2 Contractor Use of Submittal Register

Update the following fields with each submittal throughout contract.

Column (b) Transmittal Number: Contractor assigned list of consecutive numbers.

Column (j) Action Code (k): Date of action used to record Contractor's review when forwarding submittals to QC.

Column (l) List date of submittal transmission.

Column (q) List date approval received.

1.9.3 Approving Authority Use of Submittal Register

Update the following fields.

Column (b) Transmittal Number: Contractor assigned list of consecutive numbers.

Column (l) List date of submittal receipt.

Column (m) through (p)List Date related to review actions.

Column (q) List date returned to Contractor.

1.9.4 Action Codes

Entries for columns (j) and (o), are to be used are as follows (others may be prescribed by Transmittal Form):

1.9.4.1 Government Review Action Codes

"A" - "Approved as submitted"; "Completed"

"B" - "Approved, except as noted on drawings"; "Completed"

"C" - "Approved, resubmission required"; "Resubmit"

"D" - "Returned by correspondence"; "Completed"

"E" - "Disapproved (See attached)"; "Resubmit"

"F" - "Receipt acknowledged"; "Completed"

"G" - "Other (Specify)"; "Resubmit"

"X" - "Receipt acknowledged, does not comply"; "Resubmit"

1.9.4.2 Contractor Action Codes

NR - Not Received

AN - Approved as noted

A - Approved

RR - Disapproved, Revise, and Resubmit

1.9.5 Copies Delivered to the Government

Deliver one copy of submittal register updated by Contractor to Government with each invoice request.

1.10 SCHEDULING

Schedule and submit concurrently submittals covering component items forming a system or items that are interrelated. Include certifications to be submitted with the pertinent drawings at the same time. No delay damages or time extensions will be allowed for time lost in late submittals. An additional 14 calendar days will be allowed and shown on the register for review and approval of submittals for refrigeration and HVAC control systems.

a. Coordinate scheduling, sequencing, preparing and processing of submittals with performance of work so that work will not be delayed by submittal processing. Allow for potential resubmittal of requirements.

b. Submittals called for by the contract documents will be listed on the register. If a submittal is called for but does not pertain to the contract work, the Contractor is to include the submittal in the register and annotate it "N/A" with a brief explanation. Approval by the Contracting Officer does not relieve the Contractor of supplying submittals required by the contract documents but which have been omitted from the register or marked "N/A."

c. Re-submit register and annotate monthly by the Contractor with actual submission and approval dates. When all items on the register have been fully approved, no further re-submittal is required.

d. Carefully control procurement operations to ensure that each individual submittal is made on or before the Contractor scheduled

submittal date shown on the approved "Submittal Register."

e. Except as specified otherwise, allow review period, beginning with receipt by approving authority, that includes at least 15 working days for submittals for QC Manager approval and 20 working days for submittals for Contracting Officer approval. Period of review for submittals with Contracting Officer approval begins when Government receives submittal from QC organization.

f. For submittals requiring review by fire protection engineer, allow review period, beginning when Government receives submittal from QC organization, of 30 working days for return of submittal to the Contractor.

g. Period of review for each resubmittal is the same as for initial submittal.

1.10.1 Reviewing, Certifying, Approving Authority

The QC organization is responsible for reviewing and certifying that submittals are in compliance with contract requirements. Approving authority on submittals is QC Manager unless otherwise specified for specific submittal. At each "Submittal" paragraph in individual specification sections, a notation "G," following a submittal item, indicates Contracting Officer is approving authority for that submittal item.

1.10.2 Constraints

a. Conform to provisions of this section, unless explicitly stated otherwise for submittals listed or specified in this contract.

b. Submit complete submittals for each definable feature of work. Submit at the same time components of definable feature interrelated as a system.

c. When acceptability of a submittal is dependent on conditions, items, or materials included in separate subsequent submittals, submittal will be returned without review.

d. Approval of a separate material, product, or component does not imply approval of assembly in which item functions.

1.10.3 QC Organization Responsibilities

a. Note date on which submittal was received from Contractor on each submittal.

b. Review each submittal; and check and coordinate each submittal with requirements of work and contract documents.

c. Review submittals for conformance with project design concepts and compliance with contract documents.

d. Act on submittals, determining appropriate action based on QC organization's review of submittal.

(1) When QC Manager is approving authority, take appropriate action on submittal from the possible actions defined in paragraph

entitled, "Approved/Accepted Submittals," of the section."

(2) When Contracting Officer is approving authority or when variation has been proposed, forward submittal to Government with certifying statement or return submittal marked "not reviewed" or "revise and resubmit" as appropriate. The QC organization's review of submittal determines appropriate action.

e. Ensure that material is clearly legible.

f. Stamp each sheet of each submittal with QC certifying statement or approving statement, except that data submitted in bound volume or on one sheet printed on two sides may be stamped on the front of the first sheet only.

(1) When approving authority is Contracting Officer, QC organization will certify submittals forwarded to Contracting Officer with the following certifying statement:

"I hereby certify that the (equipment) (material) (article) shown and marked in this submittal is that proposed to be incorporated with contract Number (insert contract number here), is in compliance with the contract drawings and specification, can be installed in the allocated spaces, and is submitted for Government approval.

Certified by Submittal Reviewer _____, Date _____
(Signature when applicable)

Certified by QC Manager _____, Date _____"
(Signature)

(2) When approving authority is QC Manager, QC Manager will use the following approval statement when returning submittals to Contractor as "Approved" or "Approved as Noted."

"I hereby certify that the (material) (equipment) (article) shown and marked in this submittal and proposed to be incorporated with contract Number (insert contract number here), is in compliance with the contract drawings and specification, can be installed in the allocated spaces, and is approved for use.

Certified by Submittal Reviewer _____, Date _____
(Signature when applicable)

Approved by QC Manager _____, Date _____"
(Signature)

g. Sign certifying statement or approval statement. The QC organization member designated in the approved QC plan is the person signing certifying statements. The use of original ink for signatures is required. Stamped signatures are not acceptable.

h. Update submittal register as submittal actions occur and maintain the submittal register at project site until final acceptance of all work by Contracting Officer.

i. Retain a copy of approved submittals at project site, including Contractor's copy of approved samples.

1.11 GOVERNMENT APPROVING AUTHORITY

When approving authority is Contracting Officer, the Government will:

a. Note date on which submittal was received from QC Manager.

b. Review submittals for approval within scheduling period specified and only for conformance with project design concepts and compliance with contract documents.

c. Identify returned submittals with one of the actions defined in paragraph entitled "Review Notations" of this section and with markings appropriate for action indicated.

Upon completion of review of submittals requiring Government approval, stamp and date approved submittals. Two copies of the approved submittal will be retained by the Contracting Officer and remaining copies of the submittal will be returned to the Contractor.

1.11.1 Review Notations

Contracting Officer review will be completed within 30 calendar days after date of submission. Submittals will be returned to the Contractor with the following notations:

a. Submittals marked "approved" or "accepted" authorize the Contractor to proceed with the work covered.

b. Submittals marked "approved as noted" "or approved except as noted, resubmittal not required," authorize the Contractor to proceed with the work covered provided he takes no exception to the corrections.

c. Submittals marked "not approved" or "disapproved," or "revise and resubmit," indicate noncompliance with the contract requirements or design concept, or that submittal is incomplete. Resubmit with appropriate changes. No work shall proceed for this item until resubmittal is approved.

d. Submittals marked "not reviewed" will indicate submittal has been previously reviewed and approved, is not required , does not have evidence of being reviewed and approved by Contractor, or is not complete. A submittal marked "not reviewed" will be returned with an explanation of the reason it is not reviewed. Resubmit submittals returned for lack of review by Contractor or for being incomplete, with appropriate action, coordination, or change.

1.12 DISAPPROVED OR REJECTED SUBMITTALS

Contractor shall make corrections required by the Contracting Officer. If the Contractor considers any correction or notation on the returned submittals to constitute a change to the contract drawings or specifications; notice as required under the clause entitled, "Changes," is to be given to the Contracting Officer. Contractor is responsible for the dimensions and design of connection details and construction of work. Failure to point out deviations may result in the Government requiring rejection and removal of such work at the Contractor's expense.

If changes are necessary to submittals, the Contractor shall make such revisions and submission of the submittals in accordance with the

procedures above. No item of work requiring a submittal change is to be accomplished until the changed submittals are approved.

1.13 APPROVED/ACCEPTED SUBMITTALS

The Contracting Officer's approval or acceptance of submittals is not to be construed as a complete check, and indicates only that the general method of construction, materials, detailing, and other information are satisfactory.

Approval or acceptance will not relieve the Contractor of the responsibility for any error which may exist, as the Contractor under the Contractor Quality Control (CQC) requirements of this contract is responsible for dimensions, the design of adequate connections and details, and the satisfactory construction of all work.

After submittals have been approved or accepted by the Contracting Officer, no resubmittal for the purpose of substituting materials or equipment will be considered unless accompanied by an explanation of why a substitution is necessary.

1.14 APPROVED SAMPLES

Approval of a sample is only for the characteristics or use named in such approval and is not be construed to change or modify any contract requirements. Before submitting samples, the Contractor to assure that the materials or equipment will be available in quantities required in the project. No change or substitution will be permitted after a sample has been approved.

Match the approved samples for materials and equipment incorporated in the work. If requested, approved samples, including those which may be damaged in testing, will be returned to the Contractor, at his expense, upon completion of the contract. Samples not approved will also be returned to the Contractor at its expense, if so requested.

Failure of any materials to pass the specified tests will be sufficient cause for refusal to consider, under this contract, any further samples of the same brand or make of that material. Government reserves the right to disapprove any material or equipment which previously has proved unsatisfactory in service.

Samples of various materials or equipment delivered on the site or in place may be taken by the Contracting Officer for testing. Samples failing to meet contract requirements will automatically void previous approvals. Contractor to replace such materials or equipment to meet contract requirements.

Approval of the Contractor's samples by the Contracting Officer does not relieve the Contractor of his responsibilities under the contract.

PART 2 PRODUCTS

Not Used.

PART 3 EXECUTION

Not Used.

-- End of Section --

SUBMITTAL REGISTER

CONTRACT NO. 1558046

TITLE AND LOCATION: MARINE SOP SCHOOL 120 MAN CLASSROOMS

CONTRACTOR:

ACTIVITY NO	TRANSMITTAL NO	SPEC SECT	DESCRIPTION ITEM SUBMITTED	PARAGRAPH #	CLASSIFICATION	GOVT OR A/E REVWR	CONTRACTOR: SCHEDULE DATES			CONTRACTOR ACTION			APPROVING AUTHORITY					
							SUBMIT	APPROVAL NEEDED BY	MATERIAL NEEDED BY	ACTION CODE	DATE OF ACTION	DATE FWD TO APPR AUTH/ DATE RCD FROM CONTR	DATE FWD TO OTHER REVIEWER	DATE RCD FROM OTH REVIEWER	ACTION CODE	DATE OF ACTION	MAILED TO CONTR/ DATE RCD FRM APPR AUTH	REMARKS
(a)	(b)	(c)	(d)	(e)	(f)		(g)	(h)	(i)	(j)	(k)	(l)	(m)	(n)	(o)	(p)	(q)	(r)
		01 14 00	SD-01 Preconstruction Submittals															
			List of Contact Personnel	1.3.1.1	G													
		01 20 00.00 20	SD-01 Preconstruction Submittals															
			EARNED VALUE REPORT	1.3	G													
		01 30 00	SD-01 Preconstruction Submittals															
			View Location Map	1.3	G													
			Progress and Completion	1.4	G													
			Pictures															
		01 30 01.00 22	SD-02 Shop Drawings															
			Preliminary (Pre-final) FF&E	1.5.3	G	ID												
			package															
			Final FF&E package	1.5.9	G	ID												
			Best Value Determinations	1.5.4	G	ID												
			SD-07 Certificates															
			Contractor's Interior Designer's	1.4.1	G	ID												
			Qualifications															
			SD-11 Closeout Submittals															
			Punch List Documents	1.5.8	G	ID												
			Factory Ordering Documentation	3.3	G													
		01 31 23.13 20	SD-01 Preconstruction Submittals															
			List of Contractor's Personnel	1.4.2	G													
		01 32 17.00 20	SD-01 Preconstruction Submittals															
			Qualifications	1.5	G													
			Baseline Network Analysis	1.3	G													
			Schedule															
			SD-07 Certificates															

SUBMITTAL REGISTER

CONTRACT NO. 1558046

TITLE AND LOCATION: MARINE SOP SCHOOL 120 MAN CLASSROOMS

CONTRACTOR:

ACTIVITY NO	TRANSMITTAL NO	SPEC SECT	DESCRIPTION ITEM SUBMITTED	PARAGRAPH #	CLASSIFICATION	GOVT OR A/E REVWR	CONTRACTOR: SCHEDULE DATES SUBMIT	APPROVAL NEEDED BY	MATERIAL NEEDED BY	CONTRACTOR ACTION CODE	DATE OF ACTION	DATE FWD TO APPR AUTH/ DATE RCD FROM CONTR	APPROVING AUTHORITY DATE FWD TO OTHER REVIEWER	DATE RCD FROM OTH REVIEWER	ACTION CODE	DATE OF ACTION	MAILED TO CONTR/ DATE RCD FRM APPR AUTH	REMARKS
(a)	(b)	(c)	(d)	(e)	(f)		(g)	(h)	(i)	(j)	(k)	(l)	(m)	(n)	(o)	(p)	(q)	(r)
		01 32 17.00 20	Monthly Network Analysis	1.7.1	G													
			SD-11 Closeout Submittals															
			As-Built Schedule	1.7.2	G													
		01 33 00	SD-01 Preconstruction Submittals															
			Submittal register	1.9	G													
		01 33 29	SD-01 Preconstruction Submittals															
			Preliminary Sustainability	1.5.3.1	G													
			Notebook															
			Preliminary High Performance	1.5.3.1														
			and Sustainable Building Checklist															
			SD-11 Closeout Submittals															
			Final Sustainability Notebook	1.5.3.1	G													
			Final High Performance and	1.5.3.1	G													
			Sustainable Building Checklist															
			Amended Final Sustainability	1.5.3.1	G													
			Notebook															
		01 35 26	SD-01 Preconstruction Submittals															
			Accident Prevention Plan (APP)	1.7	G	A												
			Activity Hazard Analysis (AHA)	1.8	G	A												
			Crane Critical Lift Plan	1.7.1	G	A												
			Crane Operators	1.6.1.2	G	A												
			Traffic Control Plan	1.17.1	G	A												
			Standard Hand Signals	1.17.2.1	G	A												
			SD-06 Test Reports															
			Notifications and Reports	1.12														
			Accident Reports	1.12.2														

SUBMITTAL REGISTER

CONTRACT NO. 1558046

TITLE AND LOCATION: MARINE SOP SCHOOL 120 MAN CLASSROOMS

CONTRACTOR:

ACTIVITY NO	TRANSMITTAL NO	SPEC SECT	DESCRIPTION ITEM SUBMITTED	PARAGRAPH #	CLASSIFICATION	GOVT OR A/E REVWR	CONTRACTOR: SCHEDULE DATES			CONTRACTOR ACTION			APPROVING AUTHORITY				MAILED TO CONTR/ DATE RCD FRM APPR AUTH	REMARKS
							SUBMIT	APPROVAL NEEDED BY	MATERIAL NEEDED BY	ACTION CODE	DATE OF ACTION	DATE FWD TO APPR AUTH/ DATE RCD FROM CONTR	DATE FWD TO OTHER REVIEWER	DATE RCD FROM OTH REVIEWER	ACTION CODE	DATE OF ACTION		
(a)	(b)	(c)	(d)	(e)	(f)		(g)	(h)	(i)	(j)	(k)	(l)	(m)	(n)	(o)	(p)	(q)	(r)
		01 35 26	Arc Flash Risk/Hazard Analysis	3.8.2	G													
			SD-07 Certificates															
			Confined Space Entry Permit	1.9														
			Hot work permit	1.9														
			Arc Flash Risk/Hazard Analysis	3.8.3	G													
			Qualifications															
			Contractor Electrical Energized	3.8.4	G													
			Work Permit															
			Contractor Safety Self-Evaluation	1.4	G	A												
			Checklist															
			Certificate of Compliance	1.12.3														
		01 45 00.00 20	SD-01 Preconstruction Submittals															
			Construction Quality Control (QC)	1.6.1	G													
			Plan															
			SD-06 Test Reports															
			Acceptance Testing of Critical	1.4.1														
			Systems Checklist															
			SD-07 Certificates															
			ICC IBC Special Inspections	1.5.4.1	G													
			Certification															
			ICC IBC Special Inspections	1.5.4.2	G													
			Certification															
			ICC IBC Special Inspections	1.5.4.3	G													
			Certification															
			ICC IBC Special Inspections	1.5.4.4	G													
			Certification															

SUBMITTAL REGISTER

CONTRACT NO. 1558046

TITLE AND LOCATION: MARINE SOP SCHOOL 120 MAN CLASSROOMS

CONTRACTOR:

ACTIVITY NO	TRANSMITTAL NO	SPEC SECT	DESCRIPTION ITEM SUBMITTED	PARAGRAPH #	CLASSIFICATION	GOVT OR A/E REVWR	CONTRACTOR: SCHEDULE DATES			CONTRACTOR ACTION			APPROVING AUTHORITY					
							SUBMIT	APPROVAL NEEDED BY	MATERIAL NEEDED BY	ACTION CODE	DATE OF ACTION	DATE FWD TO APPR AUTH/ DATE RCD FROM CONTR	DATE FWD TO OTHER REVIEWER	DATE RCD FROM OTH REVIEWER	ACTION CODE	DATE OF ACTION	MAILED TO CONTR/ DATE RCD FRM APPR AUTH	REMARKS
(a)	(b)	(c)	(d)	(e)	(f)		(g)	(h)	(i)	(j)	(k)	(l)	(m)	(n)	(o)	(p)	(q)	(r)
		01 45 00.00 20	ICC IBC Special Inspections	1.5.4.5	G													
			Certification															
		01 45 35	SD-01 Preconstruction Submittals															
			SIOR Letter of Acceptance	3.1.1	G													
			Project Manual	3.1.1	G													
			Project Manual	3.1.1	G													
			SD-06 Test Reports															
			Daily Reports	3.1.1														
			Daily Reports	3.1.3														
			Biweekly Reports	3.1.1														
			SD-07 Certificates															
			Fabrication Plant	2.1														
			AC472 Accreditation	2.1														
			Certificate of Compliance	2.1														
			Special Inspector of Record	1.5.13	G													
			Special Inspector	1.5	G													
			SD-11 Closeout Submittals															
			Comprehensive Final Report	3.1.1	G													
			Comprehensive Final Report	3.1.3	G													
		01 50 00	SD-01 Preconstruction Submittals															
			Construction Site Plan	1.3	G													
			Traffic Control Plan	3.4.1	G													
			Haul Road Plan	2.2.1	G													
			SD-06 Test Reports															
			Backflow Preventer Tests	2.5														
			SD-07 Certificates															

SUBMITTAL REGISTER

CONTRACT NO. 1558046

TITLE AND LOCATION: MARINE SOP SCHOOL 120 MAN CLASSROOMS

CONTRACTOR:

ACTIVITY NO	TRANSMITTAL NO	SPEC SECT	DESCRIPTION ITEM SUBMITTED	PARAGRAPH #	CLASSIFICATION	GOVT OR A/E REVWR	CONTRACTOR: SCHEDULE DATES			CONTRACTOR ACTION			APPROVING AUTHORITY					
							SUBMIT	APPROVAL NEEDED BY	MATERIAL NEEDED BY	ACTION CODE	DATE OF ACTION	DATE FWD TO APPR AUTH/ DATE RCD FROM CONTR	DATE FWD TO OTHER REVIEWER	DATE RCD FROM OTH REVIEWER	ACTION CODE	DATE OF ACTION	MAILED TO CONTR/ DATE RCD FRM APPR AUTH	REMARKS
(a)	(b)	(c)	(d)	(e)	(f)		(g)	(h)	(i)	(j)	(k)	(l)	(m)	(n)	(o)	(p)	(q)	(r)
		01 50 00	Backflow Tester	1.4.1														
			Backflow Preventers	1.4														
		01 57 19	SD-01 Preconstruction Submittals															
			Preconstruction Survey	1.6.1														
			Solid Waste Management Permit	1.10	G													
			Regulatory Notifications	1.6.2	G													
			Environmental Protection Plan	1.7	G													
			Stormwater Pollution Prevention	3.2.1.1	G													
			Plan															
			Stormwater Notice of Intent	3.2.1.2	G													
			Dirt and Dust Control Plan	1.7.9.1	G													
			Employee Training Records	1.6.5	G													
			Environmental Manager	1.6.4	G													
			Qualifications															
			SD-06 Test Reports															
			Laboratory Analysis	3.7.1.1.2														
			Inspection Reports	3.2.1.3														
			Monthly Solid Waste Disposal	1.10.1	G													
			Report															
			SD-07 Certificates															
			Employee Training Records	1.6.5	G													
			ECATTS Certificate Of	1.4.1.2	G													
			Completion															
			Erosion and Sediment Control	1.6.5														
			Inspector															
			SD-11 Closeout Submittals															

SUBMITTAL REGISTER

CONTRACT NO. 1558046

TITLE AND LOCATION: MARINE SOP SCHOOL 120 MAN CLASSROOMS

CONTRACTOR:

ACTIVITY NO	TRANSMITTAL NO	SPEC SECT	DESCRIPTION ITEM SUBMITTED	PARAGRAPH #	CLASSIFICATION	GOVT OR A/E REVWR	CONTRACTOR: SCHEDULE DATES			CONTRACTOR ACTION			APPROVING AUTHORITY					
							SUBMIT	APPROVAL NEEDED BY	MATERIAL NEEDED BY	ACTION CODE	DATE OF ACTION	DATE FWD TO APPR AUTH/ DATE RCD FROM CONTR	DATE FWD TO OTHER REVIEWER	DATE RCD FROM OTH REVIEWER	ACTION CODE	DATE OF ACTION	MAILED TO CONTR/ DATE RCD FRM APPR AUTH	REMARKS
(a)	(b)	(c)	(d)	(e)	(f)		(g)	(h)	(i)	(j)	(k)	(l)	(m)	(n)	(o)	(p)	(q)	(r)
		01 57 19	Stormwater Pollution Prevention	3.2.1.4	G													
			Plan Compliance Notebook															
			Stormwater Notice of Termination	3.2.1.5	G													
			Waste Determination	3.7.1	G													
			Documentation															
			Disposal Documentation for	3.7.3.6	G													
			Hazardous and Regulated Waste															
			Assembled Employee Training	1.6.5	G													
			Records															
			Solid Waste Management Permit	1.10	G													
			Project Solid Waste Disposal	3.7.2.1	G													
			Documentation Report															
			Contractor Hazardous Material	3.8.1	G													
			Inventory Log															
			Hazardous Waste/Debris	3.7.3.1	G													
			Management															
			Regulatory Notifications	1.6.2	G													
			Sales Documentation	3.7.2.1	G													
			Contractor Certification	3.7.2.1														
			As-Built Topographic Survey	3.2.1.5														
		01 58 00	SD-02 Shop Drawings															
			preliminary drawing indicating	1.4.1	G													
			layout and text content															
			SD-04 Samples															
			Final framed rendering	1.3.1.1	G													
		01 60 00.00 22	SD-07 Certificates															

SUBMITTAL REGISTER

CONTRACT NO. 1558046

TITLE AND LOCATION: MARINE SOP SCHOOL 120 MAN CLASSROOMS

CONTRACTOR:

ACTIVITY NO	TRANSMITTAL NO	SPEC SECT	DESCRIPTION ITEM SUBMITTED	PARAG # RAPH	CLASSIFICATION	GOVT OR A/E REVWR	CONTRACTOR: SCHEDULE DATES			CONTRACTOR ACTION			APPROVING AUTHORITY					
							SUBMIT	APPROVAL NEEDED BY	MATERIAL NEEDED BY	ACTION CODE	DATE OF ACTION	DATE FWD TO APPR AUTH/ DATE RCD FROM CONTR	DATE FWD TO OTHER REVIEWER	DATE RCD FROM OTH REVIEWER	ACTION CODE	DATE OF ACTION	MAILED TO CONTR/ DATE RCD FRM APPR AUTH	REMARKS
(a)	(b)	(c)	(d)	(e)	(f)		(g)	(h)	(i)	(j)	(k)	(l)	(m)	(n)	(o)	(p)	(q)	(r)
		01 60 00.00 22	Certificate of State Licensed	1.2.1	G													
			Applicator															
			SD-11 Closeout Submittals															
			Field Pesticide/Herbicide	3.2	G													
			Management Record Form															
		01 74 19	SD-01 Preconstruction Submittals															
			Waste Management Plan	1.6	G													
			SD-11 Closeout Submittals															
			Records	1.7														
		01 78 00	SD-03 Product Data															
			As-Built Record of Equipment	1.3.2														
			and Materials															
			Warranty Management Plan	1.7.1														
			Warranty Tags	1.7.4														
			Final Cleaning	1.10														
			Spare Parts Data	1.4														
			SD-08 Manufacturer's Instructions															
			Preventative Maintenance	1.5														
			Condition Monitoring (Predictive	1.5														
			Testing)															
			Inspection	1.5														
			Instructions	1.7.1														
			SD-10 Operation and Maintenance															
			Data															
			Operation and Maintenance	1.9														
			Manuals															

SUBMITTAL REGISTER

CONTRACT NO. 1558046

TITLE AND LOCATION: MARINE SOP SCHOOL 120 MAN CLASSROOMS

CONTRACTOR

ACTIVITY NO	TRANSMITTAL NO	SPEC SECT	DESCRIPTION ITEM SUBMITTED	PARAGRAPH #	CLASSIFICATION	GOVT OR A/E REVWR	CONTRACTOR: SCHEDULE DATES			CONTRACTOR ACTION			APPROVING AUTHORITY					
							SUBMIT	APPROVAL NEEDED BY	MATERIAL NEEDED BY	ACTION CODE	DATE OF ACTION	DATE FWD TO APPR AUTH/ DATE RCD FROM CONTR	DATE FWD TO OTHER REVIEWER	DATE RCD FROM OTH REVIEWER	ACTION CODE	DATE OF ACTION	MAILED TO CONTR/ DATE RCD FRM APPR AUTH	REMARKS
(a)	(b)	(c)	(d)	(e)	(f)		(g)	(h)	(i)	(j)	(k)	(l)	(m)	(n)	(o)	(p)	(q)	(r)
		01 78 00	SD-11 Closeout Submittals															
			Record Drawings	1.3.1														
			NAVFAC Sustainable & Energy	1.13	G													
			Data Record Card															
			Certification of EPA Designated	1.6	G													
			Items															
			Preliminary Interim DD Form	1.11	G													
			1354															
			Updated Interim DD Form 1354	1.11	G													
		01 78 24.00 20	SD-11 Closeout Submittals															
			eOMSI, Progress Submittal	1.4.1	G													
			eOMSI, Prefinal Submittal	1.4.2	G													
			eOMSI, Final Submittal	1.4.3	G													
		01 78 30.00 22	SD-11 Closeout Submittals															
			GIS Data Deliverables	1.3.6	G													
		01 91 00.15 22	SD-06 Test Reports															
			Completed Building Envelope	3.1.5.2	G													
			Inspection Checklists															
			Completed Pre-Functional	3.1.5.3	G													
			Checklists															
			SD-07 Certificates															
			Certificate of Readiness	1.9	G													
			SD-10 Operation and Maintenance															
			Data															
			Training Plan	3.1.6	G													
			Training Attendance Rosters	3.1.6	G													

SUBMITTAL REGISTER

CONTRACT NO. 1558046

TITLE AND LOCATION: MARINE SOP SCHOOL 120 MAN CLASSROOMS

CONTRACTOR:

ACTIVITY NO	TRANSMITTAL NO	SPEC SECT	DESCRIPTION ITEM SUBMITTED	PARAG # RAPH	CLASSIFICATION	GOVT OR A/E REVWR	CONTRACTOR: SCHEDULE DATES			CONTRACTOR ACTION			APPROVING AUTHORITY					
							SUBMIT	APPROVAL NEEDED BY	MATERIAL NEEDED BY	ACTION CODE	DATE OF ACTION	DATE FWD TO APPR AUTH/ DATE RCD FROM CONTR	DATE FWD TO OTHER REVIEWER	DATE RCD FROM OTH REVIEWER	ACTION CODE	DATE OF ACTION	MAILED TO CONTR/ DATE RCD FRM APPR AUTH	REMARKS
(a)	(b)	(c)	(d)	(e)	(f)		(g)	(h)	(i)	(j)	(k)	(l)	(m)	(n)	(o)	(p)	(q)	(r)
		01 91 00.15 22	Systems Manual	3.1.7	G													
		03 30 00	SD-01 Preconstruction Submittals															
			Concrete Curing Plan	1.6.3.1														
			Quality Control Plan	1.6.6	G													
			Quality Control Personnel	1.6.7	G													
			Certifications															
			Quality Control Organizational	1.6.7														
			Chart															
			Laboratory Accreditation	1.6.9	G													
			Maturity Method Data	3.3.10														
			SD-02 Shop Drawings															
			Reinforcing Steel	1.6.2.1	G													
			SD-03 Product Data															
			Joint Sealants	2.4.5														
			Joint Filler	2.4.4														
			Formwork Materials	2.1														
			Recycled Aggregate Materials	2.3.3.3														
			Cementitious Materials	2.3.1														
			Vapor Retarder															
			Concrete Curing Materials	2.4.1														
			Reinforcement	2.6														
			Liquid Chemical Floor Hardeners	2.4.3.1														
			and Sealers															
			Admixtures	2.3.4														
			Reinforcing Fibers	2.6.6														

SUBMITTAL REGISTER

CONTRACT NO. 1558046

TITLE AND LOCATION: MARINE SOP SCHOOL 120 MAN CLASSROOMS

CONTRACTOR:

ACTIVITY NO	TRANSMITTAL NO	SPEC SECT	DESCRIPTION ITEM SUBMITTED	PARAGRAPH #	CLASSIFICATION	GOVT OR A/E REVWR	CONTRACTOR: SCHEDULE DATES			CONTRACTOR ACTION			APPROVING AUTHORITY					
							SUBMIT	APPROVAL NEEDED BY	MATERIAL NEEDED BY	ACTION CODE	DATE OF ACTION	DATE FWD TO APPR AUTH/ DATE RCD FROM CONTR	DATE FWD TO OTHER REVIEWER	DATE RCD FROM OTH REVIEWER	ACTION CODE	DATE OF ACTION	MAILED TO CONTR/ DATE RCD FRM APPR AUTH	REMARKS
(a)	(b)	(c)	(d)	(e)	(f)		(g)	(h)	(i)	(j)	(k)	(l)	(m)	(n)	(o)	(p)	(q)	(r)
		03 30 00	Mechanical Reinforcing Bar	2.6.2														
			Connectors															
			Waterstops	2.2.2														
			Local/Regional Materials	1.8.1														
			Biodegradable Form Release	2.2.3														
			Agent															
			Pumping Concrete	1.6.3.2														
			Nonshrink Grout	2.4.2														
			SD-05 Design Data															
			Concrete Mix Design	1.6.1.1	G													
			SD-06 Test Reports															
			Concrete Mix Design	1.6.1.1	G													
			Fly Ash	1.6.4.1														
			Pozzolan	1.6.4.1														
			Slag Cement	1.6.4.2														
			Aggregates	1.6.4.3														
			Compressive Strength Tests	3.14.2.3	G													
			Air Content	3.14.2.4														
			Slump Tests	3.14.2.1														
			Water	2.3.2														
			SD-07 Certificates															
			Reinforcing Bars	2.6.1														
			Welder Qualifications	1.9														
			VOC Content for Form Release	1.6.3.5														
			Agents, Curing Compounds, and															
			Concrete Penetrating Sealers															

SUBMITTAL REGISTER

CONTRACT NO. 1558046

TITLE AND LOCATION: MARINE SOP SCHOOL 120 MAN CLASSROOMS

CONTRACTOR:

ACTIVITY NO	TRANSMITTAL NO	SPEC SECT	DESCRIPTION ITEM SUBMITTED	PARAGRAPH #	CLASSIFICATION	GOVT OR A/E REVWR	CONTRACTOR: SCHEDULE DATES			CONTRACTOR ACTION			APPROVING AUTHORITY					
							SUBMIT	APPROVAL NEEDED BY	MATERIAL NEEDED BY	ACTION CODE	DATE OF ACTION	DATE FWD TO APPR AUTH/ DATE RCD FROM CONTR	DATE FWD TO OTHER REVIEWER	DATE RCD FROM OTH REVIEWER	ACTION CODE	DATE OF ACTION	MAILED TO CONTR/ DATE RCD FRM APPR AUTH	REMARKS
(a)	(b)	(c)	(d)	(e)	(f)		(g)	(h)	(i)	(j)	(k)	(l)	(m)	(n)	(o)	(p)	(q)	(r)
		03 30 00	Safety Data Sheets	1.6.3.6														
			Forest Stewardship Council	1.8.2														
			(FSC) Certification															
			Field Testing Technician and	1.6.7.2														
			Testing Agency															
			SD-08 Manufacturer's Instructions															
			Liquid Chemical Floor Hardeners	2.4.3.1														
			and Sealers															
			Joint Sealants	2.4.5														
			Curing Compound	2.4.1														
		03 42 13.00 10	SD-01 Preconstruction Submittals															
			Quality Control Procedures	1.3.2.2														
			SD-02 Shop Drawings															
			Standard Precast Units	2.1.1	G													
			Custom-Made Precast Units	2.1.2	G													
			Special Finishes	3.2.4.3														
			SD-03 Product Data															
			Standard Precast Units	2.1.1														
			Proprietary Precast Units	2.1.3														
			Embedded Items	3.1.3														
			Accessories	2.2.6														
			SD-05 Design Data															
			Design Calculations	2.1.2	G													
			Concrete Mix Proportions	2.1.5.1														
			SD-06 Test Reports															
			Test Reports	1.3.2.4														

SUBMITTAL REGISTER

CONTRACT NO. 1558046

TITLE AND LOCATION: MARINE SOP SCHOOL 120 MAN CLASSROOMS

CONTRACTOR:

ACTIVITY NO	TRANSMITTAL NO	SPEC SECT	DESCRIPTION ITEM SUBMITTED	PARAGRAPH #	CLASSIFICATION	GOVT OR A/E REVWR	CONTRACTOR: SCHEDULE DATES			CONTRACTOR ACTION			APPROVING AUTHORITY					
							SUBMIT	APPROVAL NEEDED BY	MATERIAL NEEDED BY	ACTION CODE	DATE OF ACTION	DATE FWD TO APPR AUTH/ DATE RCD FROM CONTR	DATE FWD TO OTHER REVIEWER	DATE RCD FROM OTH REVIEWER	ACTION CODE	DATE OF ACTION	MAILED TO CONTR/ DATE RCD FRM APPR AUTH	REMARKS
(a)	(b)	(c)	(d)	(e)	(f)		(g)	(h)	(i)	(j)	(k)	(l)	(m)	(n)	(o)	(p)	(q)	(r)
		03 42 13.00 10	SD-07 Certificates															
			Quality Control Procedures	1.3.2.2														
			SD-11 Closeout Submittals															
			Recycled content for fly ash and	2.2.1	S													
			pozzolan															
			Recycled content for Ground Iron	2.2.1	S													
			Blast-Furnace Slag															
			Recycled content for Silica Fume	2.2.1	S													
			Recycled content for Synthetic	2.2.1	S													
			Fiber Reinforcement															
			Recycled content for steel	2.2.1	S													
		04 20 00	SD-02 Shop Drawings															
			Cut CMU	3.3.4.1	G													
			Detail Drawings	3.4.1.1	G													
			SD-03 Product Data															
			Hot Weather Procedures	1.5.1														
			Cold Weather Procedures	1.5.2														
			Clay or Shale Brick	2.2.2	G													
			Salvaged Brick	2.2.2.4	G													
			Cement	2.2.3.2.1	G													
			Cementitious Materials	2.4.1.1	G													
			SD-04 Samples															
			Mock-Up Panel	1.3.1.1														
			Clay or Shale Brick	2.2.2	G													
			Concrete Masonry Units (CMU)	2.2.3.2	G													
			Admixtures for Masonry Mortar	2.4.1.4														

SUBMITTAL REGISTER

CONTRACT NO. 1558046

TITLE AND LOCATION: MARINE SOP SCHOOL 120 MAN CLASSROOMS

CONTRACTOR:

ACTIVITY NO	TRANSMITTAL NO	SPEC SECT	DESCRIPTION ITEM SUBMITTED	PARAGRAPH #	CLASSIFICATION	GOVT OR A/E REVWR	CONTRACTOR: SCHEDULE DATES			CONTRACTOR ACTION			APPROVING AUTHORITY					
							SUBMIT	APPROVAL NEEDED BY	MATERIAL NEEDED BY	ACTION CODE	DATE OF ACTION	DATE FWD TO APPR AUTH/ DATE RCD FROM CONTR	DATE FWD TO OTHER REVIEWER	DATE RCD FROM OTH REVIEWER	ACTION CODE	DATE OF ACTION	MAILED TO CONTR/ DATE RCD FRM APPR AUTH	REMARKS
(a)	(b)	(c)	(d)	(e)	(f)		(g)	(h)	(i)	(j)	(k)	(l)	(m)	(n)	(o)	(p)	(q)	(r)
		04 20 00	Anchors, Ties, and Bar	2.6.2	G													
			Positioners															
			Joint Reinforcement	2.6.3	G													
			Clay Masonry Expansion-Joint	2.6.6	G													
			Materials															
			SD-05 Design Data															
			Masonry Compressive Strength	2.1.2	G													
			Fire-Rated Concrete Masonry	2.2.3.4														
			Units															
			Bracing Calculations	3.2.5	G													
			SD-06 Test Reports															
			Efflorescence Test	2.2.2.1.4														
			Fire-Rated Concrete Masonry	2.2.3.4														
			Units															
			Field Testing of Mortar	3.6.1.1														
			Field Testing of Grout	3.6.1.2														
			Single-Wythe Masonry Wall	3.6.1.4														
			Water Penetration Test															
			SD-07 Certificates															
			Special Masonry Inspector	1.3.2														
			Qualifications															
			Concrete Masonry Units (CMU)	2.2.3.2														
			Concrete Brick	2.2.3.5														
			Cementitious Materials	2.4.1.1														
			Admixtures for Masonry Mortar	2.4.1.4														
			Admixtures for Grout	2.4.2.2														

SUBMITTAL REGISTER

CONTRACT NO. 1558046

TITLE AND LOCATION: MARINE SOP SCHOOL 120 MAN CLASSROOMS

CONTRACTOR:

ACTIVITY NO	TRANSMITTAL NO	SPEC SECT	DESCRIPTION ITEM SUBMITTED	PARAGRAPH #	CLASSIFICATION	GOVT OR A/E REVWR	CONTRACTOR: SCHEDULE DATES			CONTRACTOR ACTION			APPROVING AUTHORITY					
							SUBMIT	APPROVAL NEEDED BY	MATERIAL NEEDED BY	ACTION CODE	DATE OF ACTION	DATE FWD TO APPR AUTH/ DATE RCD FROM CONTR	DATE FWD TO OTHER REVIEWER	DATE RCD FROM OTH REVIEWER	ACTION CODE	DATE OF ACTION	MAILED TO CONTR/ DATE RCD FRM APPR AUTH	REMARKS
(a)	(b)	(c)	(d)	(e)	(f)		(g)	(h)	(i)	(j)	(k)	(l)	(m)	(n)	(o)	(p)	(q)	(r)
		04 20 00	Anchors, Ties, and Bar	2.6.2														
			Positioners															
			Joint Reinforcement	2.6.3														
			Insulation	2.6.8														
			SD-08 Manufacturer's Instructions															
			Admixtures for Masonry Mortar	2.4.1.4														
			Admixtures for Grout	2.4.2.2														
			SD-10 Operation and Maintenance															
			Data															
			Take-Back Program	3.8														
			SD-11 Closeout Submittals															
			Clayor Shale Brick	2.2.2	S													
			Recycled Content	2.2.3.2.2	S													
		05 40 00	SD-02 Shop Drawings															
			Framing Components	1.6.1	G													
			SD-03 Product Data															
			Studs, Joists	2.1														
			SD-05 Design Data															
			Metal Framing Calculations	1.6.2	G													
			SD-07 Certificates															
			Load-Bearing Cold-Formed Metal	1.4														
			Framing															
			Welds	3.1.1														
		05 50 13	SD-02 Shop Drawings															
			Access Doors and Panels	2.3	G													
			Cover Plates and Frames	2.5	G													

SUBMITTAL REGISTER

CONTRACT NO. 1558046

TITLE AND LOCATION: MARINE SOP SCHOOL 120 MAN CLASSROOMS

CONTRACTOR:

ACTIVITY NO	TRANSMITTAL NO	SPEC SECT	DESCRIPTION ITEM SUBMITTED	PARAG # RAPH	CLASSIFICATION	GOVT OR A/E REVWR	CONTRACTOR: SCHEDULE DATES			CONTRACTOR ACTION			APPROVING AUTHORITY					
							SUBMIT	APPROVAL NEEDED BY	MATERIAL NEEDED BY	ACTION CODE	DATE OF ACTION	DATE FWD TO APPR AUTH/ DATE RCD FROM CONTR	DATE FWD TO OTHER REVIEWER	DATE RCD FROM OTH REVIEWER	ACTION CODE	DATE OF ACTION	MAILED TO CONTR/ DATE RCD FRM APPR AUTH	REMARKS
(a)	(b)	(c)	(d)	(e)	(f)		(g)	(h)	(i)	(j)	(k)	(l)	(m)	(n)	(o)	(p)	(q)	(r)
		05 50 13	Expansion Joint Covers	2.6	G													
			Angles and Plates	2.8	G													
			SD-03 Product Data															
			Access Doors and Panels	2.3														
			Cover Plates and Frames	2.5														
			Expansion Joint Covers	2.6														
		05 52 00	SD-02 Shop Drawings															
			Fabrication Drawings	1.2.1	G													
			Iron and Steel Hardware	3.2	G													
			Steel Shapes, Plates, Bars and	3.2	G													
			Strips															
			SD-03 Product Data															
			Structural Steel Plates, Shapes,	2.2.1	G													
			and Bars															
			Cold-Finished Steel Bars	2.2.3	G													
			Hot-Rolled Carbon Steel Bars	2.2.2	G													
			Cold-Drawn Steel Tubing	2.2.4	G													
			Protective Coating	2.1.2	G													
			Steel Railings and Handrails	2.2.7	G													
			Anchorage and Fastening	1.2.1	G													
			Systems															
			Installation Instructions	3.2	G													
		06 10 00	SD-03 Product Data															
			Fire-retardant Treatment	1.8														
			SD-06 Test Reports															
			Preservative-treated	1.4.3														

SUBMITTAL REGISTER

CONTRACT NO. 1558046

TITLE AND LOCATION: MARINE SOP SCHOOL 120 MAN CLASSROOMS

CONTRACTOR:

ACTIVITY NO	TRANSMITTAL NO	SPEC SECT	DESCRIPTION ITEM SUBMITTED	PARAGRAPH #	CLASSIFICATION	GOVT OR A/E REVWR	CONTRACTOR: SCHEDULE DATES			CONTRACTOR ACTION			APPROVING AUTHORITY					
							SUBMIT	APPROVAL NEEDED BY	MATERIAL NEEDED BY	ACTION CODE	DATE OF ACTION	DATE FWD TO APPR AUTH/ DATE RCD FROM CONTR	DATE FWD TO OTHER REVIEWER	DATE RCD FROM OTH REVIEWER	ACTION CODE	DATE OF ACTION	MAILED TO CONTR/ DATE RCD FRM APPR AUTH	REMARKS
(a)	(b)	(c)	(d)	(e)	(f)		(g)	(h)	(i)	(j)	(k)	(l)	(m)	(n)	(o)	(p)	(q)	(r)
		06 10 00	Preservative Treatment	1.7														
			Indoor Air Quality															
			SD-10 Operation and Maintenance															
			Data															
			Take-back Program	3.6														
		06 61 16	SD-02 Shop Drawings															
			Installation	3.1	G ID													
			SD-03 Product Data															
			Solid Polymer Material	2.1														
			Qualifications	1.5.1														
			Fabrications	2.3														
			SD-04 Samples															
			Material	2.1	G ID													
			SD-06 Test Reports															
			Solid Polymer Material	2.1														
			SD-07 Certificates															
			Fabrications	2.3														
			Qualifications	1.5.1														
			SD-10 Operation and Maintenance															
			Data															
			Clean-up	3.2														
		07 05 23	SD-01 Preconstruction Submittals															
			Work Plan	1.4	G													
			SD-03 Product Data															
			Thermal Imaging Camera	2.2	G													
			SD-05 Design Data															

SUBMITTAL REGISTER

CONTRACT NO. 1558046

TITLE AND LOCATION: MARINE SOP SCHOOL 120 MAN CLASSROOMS

CONTRACTOR:

ACTIVITY NO	TRANSMITTAL NO	SPEC SECT	DESCRIPTION ITEM SUBMITTED	PARAGRAPH #	CLASSIFICATION	GOVT OR A/E REVWR	CONTRACTOR: SCHEDULE DATES			CONTRACTOR ACTION			APPROVING AUTHORITY					
							SUBMIT	APPROVAL NEEDED BY	MATERIAL NEEDED BY	ACTION CODE	DATE OF ACTION	DATE FWD TO APPR AUTH/ DATE RCD FROM CONTR	DATE FWD TO OTHER REVIEWER	DATE RCD FROM OTH REVIEWER	ACTION CODE	DATE OF ACTION	MAILED TO CONTR/ DATE RCD FRM APPR AUTH	REMARKS
(a)	(b)	(c)	(d)	(e)	(f)		(g)	(h)	(i)	(j)	(k)	(l)	(m)	(n)	(o)	(p)	(q)	(r)
		07 05 23	Envelope Surface Area	3.2	G													
			Calculations															
			SD-07 Certificates															
			Pressure Test Agency	1.6.2.1														
			Thermographer Qualifications	1.6.2.2														
			Test Instruments	1.6.3														
			Date Of Last Calibration	1.6.3														
			SD-06 Test Reports															
			Pressure Test Procedures	3.5	G													
			Air Leakage Test Report	3.5.8	G													
			Diagnostic Test Report	3.6.5	G													
		07 11 13	SD-07 Certificates															
			Materials	1.3														
		07 15 00.00 22	SD-02 Shop Drawings															
			Shop Drawings	2.1														
			SD-03 Product Data															
			Fluid-applied membrane barrier	3.4.2	G													
			Exterior Wall Air Barrier	2.2	G													
			Composite, self-adhering	2.4	G													
			membrane barrier sheeting															
			Composite, self-adhering	2.4	G													
			membrane barrier sheeting															
			Composite, self-adhering	3.4.3	G													
			membrane barrier sheeting															
			Accessory materials	2.7														
			SD-04 Samples															

SUBMITTAL REGISTER

CONTRACT NO. 1558046

TITLE AND LOCATION: MARINE SOP SCHOOL 120 MAN CLASSROOMS

CONTRACTOR:

ACTIVITY NO	TRANSMITTAL NO	SPEC SECT	DESCRIPTION ITEM SUBMITTED	PARAGRAPH #	CLASSIFICATION	GOVT OR A/E REVWR	CONTRACTOR: SCHEDULE DATES			CONTRACTOR ACTION			APPROVING AUTHORITY					
							SUBMIT	APPROVAL NEEDED BY	MATERIAL NEEDED BY	ACTION CODE	DATE OF ACTION	DATE FWD TO APPR AUTH/ DATE RCD FROM CONTR	DATE FWD TO OTHER REVIEWER	DATE RCD FROM OTH REVIEWER	ACTION CODE	DATE OF ACTION	MAILED TO CONTR/ DATE RCD FRM APPR AUTH	REMARKS
(a)	(b)	(c)	(d)	(e)	(f)		(g)	(h)	(i)	(j)	(k)	(l)	(m)	(n)	(o)	(p)	(q)	(r)
		07 15 00.00 22	Mock-Up	1.7.3														
			Composite, self-adhering	2.4														
			membrane barrier sheeting															
			Composite, self-adhering	2.4														
			membrane barrier sheeting															
			Composite, self-adhering	3.4.3														
			membrane barrier sheeting															
			SD-05 Design Data															
			Design Data	2.1														
			SD-06 Test Reports															
			Test Reports	1.7.4.4	G													
			Test Reports	1.7.4.4	G													
			Whole Building Air Leakage Test	1.7.4.3	G													
			Whole Building Air Leakage Test	1.7.4.4	G													
			Whole Building Air Leakage Test	3.8.1	G													
			Thermography Test	1.7.4.3	G													
			Thermography Test	1.7.4.4	G													
			Thermography Test	3.8.2	G													
			Bond Adhesion Strength Test	1.7.4.4	G													
			Bond Adhesion Strength Test	3.8.3	G													
			SD-07 Certificates															
			Manufacturer's certification of	2.1	G													
			materials compatibility															
			Inspector Qualifications	1.7.2.1	G													
			Whole Building Air Leakage Test	1.7.4.1	G													
			Technician Qualifications															

SUBMITTAL REGISTER

CONTRACT NO. 1558046

TITLE AND LOCATION: MARINE SOP SCHOOL 120 MAN CLASSROOMS

CONTRACTOR

ACTIVITY NO	TRANSMITTAL NO	SPEC SECT	DESCRIPTION ITEM SUBMITTED	PARAGRAPH #	CLASSIFICATION	GOVT OR A/E REVWR	CONTRACTOR: SCHEDULE DATES			CONTRACTOR ACTION			APPROVING AUTHORITY					
							SUBMIT	APPROVAL NEEDED BY	MATERIAL NEEDED BY	ACTION CODE	DATE OF ACTION	DATE FWD TO APPR AUTH/ DATE RCD FROM CONTR	DATE FWD TO OTHER REVIEWER	DATE RCD FROM OTH REVIEWER	ACTION CODE	DATE OF ACTION	MAILED TO CONTR/ DATE RCD FRM APPR AUTH	REMARKS
(a)	(b)	(c)	(d)	(e)	(f)		(g)	(h)	(i)	(j)	(k)	(l)	(m)	(n)	(o)	(p)	(q)	(r)
		07 15 00.00 22	Thermography Technician	1.7.4.2	G													
			Qualifications															
			Test Procedures	1.7.4.3	G													
			Test Procedures	1.7.4.3	G													
			Test Procedures	1.7.4.3	G													
			Test Procedures	1.7.4.3	G													
			SD-08 Manufacturer’s Instructions															
			Manufacturer's instructions	2.1	G													
			Material safety data sheets	2.1														
			(MSDS)															
		07 21 13	SD-03 Product Data															
			Manufacturer's Standard Details	1.3	G													
			Board Insulation	2.2	G													
			Pressure Sensitive Tape	2.4	G													
			Protection Board or Coatings	1.4	G													
			Accessories	2.6	G													
			SD-07 Certificates															
			Board Insulation	2.2	G													
			Protection Board or Coating	2.5	G													
			Protection Board or Coating	3.4.2	G													
			Warranties	1.7.1	G													
			SD-08 Manufacturer’s Instructions															
			Board Insulation	2.2														
			Adhesive	2.6.1														
		07 42 13	SD-01 Preconstruction Submittals															
			Qualification of Manufacturer	1.5.3	G													

SUBMITTAL REGISTER

CONTRACT NO. 1558046

TITLE AND LOCATION: MARINE SOP SCHOOL 120 MAN CLASSROOMS

CONTRACTOR

ACTIVITY NO	TRANSMITTAL NO	SPEC SECT	DESCRIPTION ITEM SUBMITTED	PARAGRAPH #	CLASSIFICATION	GOVT OR A/E REVWR	CONTRACTOR: SCHEDULE DATES			CONTRACTOR ACTION			APPROVING AUTHORITY				MAILED TO CONTR/	
							SUBMIT	APPROVAL NEEDED BY	MATERIAL NEEDED BY	ACTION CODE	DATE OF ACTION	DATE FWD TO APPR AUTH/ DATE RCD FROM CONTR	DATE FWD TO OTHER REVIEWER	DATE RCD FROM OTH REVIEWER	ACTION CODE	DATE OF ACTION	DATE RCD FRM APPR AUTH	REMARKS
(a)	(b)	(c)	(d)	(e)	(f)		(g)	(h)	(i)	(j)	(k)	(l)	(m)	(n)	(o)	(p)	(q)	(r)
		07 42 13	Qualification of Installation	1.5.4	G													
			Contractor															
			Warranty	1.8	G													
			SD-02 Shop Drawings															
			Installation Drawings	1.5.1.1	G													
			SD-03 Product Data															
			Recycled Content;	2.1														
			Wall Panels	2.3.1	G													
			Factory Color Finish	2.3.2														
			Closure Materials	1.5.5														
			Pressure Sensitive Tape	2.6.4.4														
			Sealants and Caulking	2.6.4.1														
			Galvanizing Repair Paint	1.5.3.1														
			Aluminized Steel Repair Paint	2.8														
			Accessories	1.5.5														
			Accessories	2.6														
			SD-04 Samples															
			Wall Panels	2.3.1	G													
			Fasteners	1.5.3.1	G													
			Metal Closure Strips	2.6.3	G													
			Color chart	2.3.2.5	G													
			SD-05 Design Data															
			Wind load design analysis	1.5.1.2	G													
			SD-06 Test Reports															
			Leakage Tests	3.7.2	G													
			Wind Load Tests	1.3.2	G													

SUBMITTAL REGISTER

CONTRACT NO. 1558046

TITLE AND LOCATION: MARINE SOP SCHOOL 120 MAN CLASSROOMS

CONTRACTOR:

ACTIVITY NO	TRANSMITTAL NO	SPEC SECT	DESCRIPTION ITEM SUBMITTED	PARAGRAPH #	CLASSIFICATION	GOVT OR A/E REVWR	CONTRACTOR: SCHEDULE DATES			CONTRACTOR ACTION			APPROVING AUTHORITY					
							SUBMIT	APPROVAL NEEDED BY	MATERIAL NEEDED BY	ACTION CODE	DATE OF ACTION	DATE FWD TO APPR AUTH/ DATE RCD FROM CONTR	DATE FWD TO OTHER REVIEWER	DATE RCD FROM OTH REVIEWER	ACTION CODE	DATE OF ACTION	MAILED TO CONTR/ DATE RCD FRM APPR AUTH	REMARKS
(a)	(b)	(c)	(d)	(e)	(f)		(g)	(h)	(i)	(j)	(k)	(l)	(m)	(n)	(o)	(p)	(q)	(r)
		07 42 13	Coating	2.3.2.6	G													
			Chalking	2.3.2.6	G													
			SD-07 Certificates															
			Coil Stock	1.5.3.1	G													
			Fasteners	1.5.3.1	G													
			Galvanizing Repair Paint	1.5.3.1	G													
			SD-08 Manufacturer’s Instructions															
			Installation	3.3														
			SD-09 Manufacturer’s Field															
			Reports															
			Manufacturer's Field Reports	3.8.1	G													
			SD-11 Closeout Submittals															
			Warranty	1.8	G													
			Maintenance Instructions	1.5.6	G													
			20 year 'No Dollar Limit' warranty	1.8.1														
			for labor and material															
		07 84 00	SD-02 Shop Drawings															
			Firestopping System	2.1	G													
			SD-03 Product Data															
			Firestopping Materials	2.2	G													
			SD-06 Test Reports															
			Inspection	3.3	G													
			SD-07 Certificates															
			Inspector Qualifications	1.5.2														
			Firestopping Materials	2.2														
			Installer Qualifications	1.5.1														

SUBMITTAL REGISTER

CONTRACT NO. 1558046

TITLE AND LOCATION: MARINE SOP SCHOOL 120 MAN CLASSROOMS

CONTRACTOR:

ACTIVITY NO	TRANSMITTAL NO	SPEC SECT	DESCRIPTION ITEM SUBMITTED	PARAGRAPH #	CLASSIFICATION	GOVT OR A/E REVWR	CONTRACTOR: SCHEDULE DATES			CONTRACTOR ACTION			APPROVING AUTHORITY					
							SUBMIT	APPROVAL NEEDED BY	MATERIAL NEEDED BY	ACTION CODE	DATE OF ACTION	DATE FWD TO APPR AUTH/ DATE RCD FROM CONTR	DATE FWD TO OTHER REVIEWER	DATE RCD FROM OTH REVIEWER	ACTION CODE	DATE OF ACTION	MAILED TO CONTR/ DATE RCD FRM APPR AUTH	REMARKS
(a)	(b)	(c)	(d)	(e)	(f)		(g)	(h)	(i)	(j)	(k)	(l)	(m)	(n)	(o)	(p)	(q)	(r)
		07 84 00	Fire Dampers	3.2.2														
			Fire Dampers	3.2.2														
		07 92 00	SD-03 Product Data															
			Sealants	2.2	G													
			Primers	2.3	G													
			Bond Breakers	2.4	G													
			Backstops	2.5	G													
			Field Adhesion	3.1	G													
			SD-07 Certificates															
			Indoor Air Quality	1.4.1	G													
			SD-11 Closeout Submittals															
			Indoor Air Quality For Interior	2.1.1	S													
			Sealants															
			Indoor Air Quality For Interior	2.2.1	S													
			Sealants															
			Indoor Air Quality For Interior	2.2.3	S													
			Floor Joint Sealants															
			Indoor Air Quality For Interior	2.2.4	S													
			Acoustical Sealants															
			Indoor Air Quality For Interior	2.6	S													
			Caulking															
		08 11 13	SD-02 Shop Drawings															
			Doors	2.1	G													
			Doors	2.1	G													
			Frames	2.5	G													
			Frames	2.5	G													

SUBMITTAL REGISTER

CONTRACT NO. 1558046

TITLE AND LOCATION: MARINE SOP SCHOOL 120 MAN CLASSROOMS

CONTRACTOR:

ACTIVITY NO	TRANSMITTAL NO	SPEC SECT	DESCRIPTION ITEM SUBMITTED	PARAG # RAPH	CLASSIFICATION	GOVT OR A/E REVWR	CONTRACTOR: SCHEDULE DATES			CONTRACTOR ACTION			APPROVING AUTHORITY				MAILED TO CONTR/	
							SUBMIT	APPROVAL NEEDED BY	MATERIAL NEEDED BY	ACTION CODE	DATE OF ACTION	DATE FWD TO APPR AUTH/ DATE RCD FROM CONTR	DATE FWD TO OTHER REVIEWER	DATE RCD FROM OTH REVIEWER	ACTION CODE	DATE OF ACTION	DATE RCD FRM APPR AUTH	REMARKS
(a)	(b)	(c)	(d)	(e)	(f)		(g)	(h)	(i)	(j)	(k)	(l)	(m)	(n)	(o)	(p)	(q)	(r)
		08 11 13	Accessories	2.3														
			Weatherstripping	2.7														
			SD-03 Product Data															
			Doors	2.1	G													
			Frames	2.5	G													
			Accessories	2.3														
			Weatherstripping	2.7														
		08 41 13	SD-01 Preconstruction Submittals															
			Sample Warranty	1.2.1	G													
			List of Product Installations	1.2.1	G													
			SD-02 Shop Drawings															
			Installation Drawings	3.3	G													
			Fabrication Drawings	2.2	G													
			SD-03 Product Data															
			Manufacturer's Catalog Data	1.2.1	G													
			Finish	2.2.3	G													
			SD-04 Samples															
			Finish and Color Samples	1.2.1	G													
			SD-06 Test Reports															
			Certified Test Reports	1.2.1	G													
			Deflection	3.4.3														
			Air Infiltration	3.4.1														
			Condensation Resistance and	3.4.4														
			Thermal Transmittance															
			Water Infiltration	3.4.5														
			SD-08 Manufacturer’s Instructions															

SUBMITTAL REGISTER

CONTRACT NO. 1558046

TITLE AND LOCATION: MARINE SOP SCHOOL 120 MAN CLASSROOMS

CONTRACTOR

ACTIVITY NO	TRANSMITTAL NO	SPEC SECT	DESCRIPTION ITEM SUBMITTED	PARAGRAPH #	CLASSIFICATION	GOVT OR A/E REVWR	CONTRACTOR: SCHEDULE DATES			CONTRACTOR ACTION			APPROVING AUTHORITY					
							SUBMIT	APPROVAL NEEDED BY	MATERIAL NEEDED BY	ACTION CODE	DATE OF ACTION	DATE FWD TO APPR AUTH/ DATE RCD FROM CONTR	DATE FWD TO OTHER REVIEWER	DATE RCD FROM OTH REVIEWER	ACTION CODE	DATE OF ACTION	MAILED TO CONTR/ DATE RCD FRM APPR AUTH	REMARKS
(a)	(b)	(c)	(d)	(e)	(f)		(g)	(h)	(i)	(j)	(k)	(l)	(m)	(n)	(o)	(p)	(q)	(r)
		08 41 13	Manufacturer's Instructions	3.3														
			SD-11 Closeout Submittals															
			Manufacturer's Product Warranty	3.6														
		08 51 13	SD-02 Shop Drawings															
			Windows	2.2	G													
			Fabrication Drawings	1.10														
			SD-03 Product Data															
			Windows	2.2	G													
			Hardware	2.3.7.1	G													
			Fasteners	2.3.2	G													
			Window Performance	1.11	G													
			Thermal-Barrier Windows	2.4	G													
			Mullions	2.5	G													
			Accessories	2.3.7	G													
			Adhesives	2.3.3														
			Thermal Performance	1.11.5	G													
			SD-04 Samples															
			Finish Sample	1.4.2.1														
			Window Sample	1.4.2.2														
			SD-05 Design Data															
			Structural Calculations for	2.2	G													
			Deflection															
			Design Analysis	1.4.3	G													
			SD-06 Test Reports															
			Minimum Condensation	1.4.4														
			Resistance Factor															

SUBMITTAL REGISTER

CONTRACT NO. 1558046

TITLE AND LOCATION: MARINE SOP SCHOOL 120 MAN CLASSROOMS

CONTRACTOR:

ACTIVITY NO	TRANSMITTAL NO	SPEC SECT	DESCRIPTION ITEM SUBMITTED	PARAGRAPH #	CLASSIFICATION	GOVT OR A/E REVWR	CONTRACTOR: SCHEDULE DATES			CONTRACTOR ACTION			APPROVING AUTHORITY				MAILED TO CONTR/	REMARKS
							SUBMIT	APPROVAL NEEDED BY	MATERIAL NEEDED BY	ACTION CODE	DATE OF ACTION	DATE FWD TO APPR AUTH/ DATE RCD FROM CONTR	DATE FWD TO OTHER REVIEWER	DATE RCD FROM OTH REVIEWER	ACTION CODE	DATE OF ACTION	DATE RCD FRM APPR AUTH	
(a)	(b)	(c)	(d)	(e)	(f)		(g)	(h)	(i)	(j)	(k)	(l)	(m)	(n)	(o)	(p)	(q)	(r)
		08 51 13	Standard Airblast Test	1.11.2.3														
			SD-10 Operation and Maintenance															
			Data															
			Windows	2.2	G													
			Plastic Identification	1.7														
			SD-11 Closeout Submittals															
			Recycled Content of Aluminum	2.1.1	S													
			Windows															
		08 71 00	SD-02 Shop Drawings															
			Manufacturer's Detail Drawings	1.3	G													
			Verification of Existing Conditions	1.3	G													
			Hardware Schedule	1.5	G													
			Keying System	2.3.8	G													
			SD-03 Product Data															
			Hardware Items	2.3	G													
			SD-08 Manufacturer’s Instructions															
			Installation	3.1														
			SD-10 Operation and Maintenance															
			Data															
			Hardware Schedule	1.5	G													
			SD-11 Closeout Submittals															
			Key Bitting	1.6.1														
		08 81 00	SD-03 Product Data															
			Insulating Glass	1.7.1														
			Glazing Accessories	1.4														
			SD-04 Samples															

SUBMITTAL REGISTER

CONTRACT NO. 1558046

TITLE AND LOCATION: MARINE SOP SCHOOL 120 MAN CLASSROOMS

CONTRACTOR:

ACTIVITY NO	TRANSMITTAL NO	SPEC SECT	DESCRIPTION ITEM SUBMITTED	PARAGRAPH #	CLASSIFICATION	GOVT OR A/E REVWR	CONTRACTOR: SCHEDULE DATES			CONTRACTOR ACTION			APPROVING AUTHORITY					
							SUBMIT	APPROVAL NEEDED BY	MATERIAL NEEDED BY	ACTION CODE	DATE OF ACTION	DATE FWD TO APPR AUTH/ DATE RCD FROM CONTR	DATE FWD TO OTHER REVIEWER	DATE RCD FROM OTH REVIEWER	ACTION CODE	DATE OF ACTION	MAILED TO CONTR/ DATE RCD FRM APPR AUTH	REMARKS
(a)	(b)	(c)	(d)	(e)	(f)		(g)	(h)	(i)	(j)	(k)	(l)	(m)	(n)	(o)	(p)	(q)	(r)
		08 81 00	Insulating Glass	1.7.1														
			Tape	2.4.4														
			Sealant	2.4.1.1														
			SD-07 Certificates															
			Insulating Glass	1.7.1														
			SD-08 Manufacturer’s Instructions															
			Setting and Sealing Materials	2.4														
			Glass Setting	3.2														
		08 91 00	SD-02 Shop Drawings															
			Wall louvers	1.4														
			Wall louvers	1.5														
			SD-03 Product Data															
			Metal Wall Louvers	2.2														
		09 22 00	SD-02 Shop Drawings															
			Metal support systems	2.1	G													
		09 29 00	SD-03 Product Data															
			Cementitious Backer Units	2.2.6														
			Glass Mat Water-Resistant	2.2.4														
			Gypsum Tile Backing Board															
			Water-Resistant Gypsum Backing	2.2.3														
			Board															
			Glass Mat Covered or Reinforced	2.2.5														
			Gypsum Sheathing															
			Glass Mat Covered or Reinforced	2.2.5.1														
			Gypsum Sheathing Sealant															
			Accessories	2.2.10														

SUBMITTAL REGISTER

CONTRACT NO. 1558046

TITLE AND LOCATION: MARINE SOP SCHOOL 120 MAN CLASSROOMS

CONTRACTOR:

ACTIVITY NO	TRANSMITTAL NO	SPEC SECT	DESCRIPTION ITEM SUBMITTED	PARAGRAPH #	CLASSIFICATION	GOVT OR A/E REVWR	CONTRACTOR: SCHEDULE DATES			CONTRACTOR ACTION			APPROVING AUTHORITY					
							SUBMIT	APPROVAL NEEDED BY	MATERIAL NEEDED BY	ACTION CODE	DATE OF ACTION	DATE FWD TO APPR AUTH/ DATE RCD FROM CONTR	DATE FWD TO OTHER REVIEWER	DATE RCD FROM OTH REVIEWER	ACTION CODE	DATE OF ACTION	MAILED TO CONTR/ DATE RCD FRM APPR AUTH	REMARKS
(a)	(b)	(c)	(d)	(e)	(f)		(g)	(h)	(i)	(j)	(k)	(l)	(m)	(n)	(o)	(p)	(q)	(r)
		09 29 00	Certifications	1.3														
			Gypsum Board	2.2.1														
			SD-07 Certificates															
			Asbestos Free Materials	2.2	G													
			Indoor Air Quality	1.3.1	G													
			SD-08 Manufacturer’s Instructions															
			Material Safety Data Sheets	2.2														
			SD-10 Operation and Maintenance															
			Data															
			Manufacturer Maintenance	2.2														
			Instructions															
			SD-11 Closeout Submittals															
			Recycled Content for Gypsum	2.2.1	S													
			Board															
			Recycled Content for Paper	2.2.1	S													
			Facing and Gypsum Cores															
			Indoor Air Quality for Gypsum	2.2.1	S													
			Board															
			VOC Content of Joint Compound	2.2.7	S													
			Indoor Air Quality for Non-aerosol	2.2.9	S													
			Adhesives															
			Indoor Air Quality for Aerosol	2.2.9	S													
			Adhesives															
		09 65 00	SD-02 Shop Drawings															
			Resilient Flooring and	2.8	G													
			Accessories															

SUBMITTAL REGISTER

CONTRACT NO. 1558046

TITLE AND LOCATION: MARINE SOP SCHOOL 120 MAN CLASSROOMS

CONTRACTOR:

ACTIVITY NO	TRANSMITTAL NO	SPEC SECT	DESCRIPTION ITEM SUBMITTED	PARAGRAPH #	CLASSIFICATION	GOVT OR A/E REVWR	CONTRACTOR: SCHEDULE DATES			CONTRACTOR ACTION			APPROVING AUTHORITY					
							SUBMIT	APPROVAL NEEDED BY	MATERIAL NEEDED BY	ACTION CODE	DATE OF ACTION	DATE FWD TO APPR AUTH/ DATE RCD FROM CONTR	DATE FWD TO OTHER REVIEWER	DATE RCD FROM OTH REVIEWER	ACTION CODE	DATE OF ACTION	MAILED TO CONTR/ DATE RCD FRM APPR AUTH	REMARKS
(a)	(b)	(c)	(d)	(e)	(f)		(g)	(h)	(i)	(j)	(k)	(l)	(m)	(n)	(o)	(p)	(q)	(r)
		09 65 00	SD-03 Product Data															
			Resilient Flooring and	2.8	G													
			Accessories															
			Adhesives	2.4														
			Solid Vinyl Tile	2.1														
			Wall Base	2.2														
			SD-04 Samples															
			Resilient Flooring and	2.8	G	ID												
			Accessories															
			SD-06 Test Reports															
			Moisture, Alkalinity and Bond	3.3	G													
			Tests															
			SD-08 Manufacturer's Instructions															
			Surface Preparation	3.2	G	ID												
			Installation	3.1	G													
			SD-10 Operation and Maintenance															
			Data															
			Resilient Flooring and	2.8	G													
			Accessories															
		09 68 00	SD-02 Shop Drawings															
			Installation Drawings	3.4	G													
			Moldings	2.6	G													
			SD-03 Product Data															
			Carpet	2.2	G													
			Carpet Cushion	2.4	G													
			Moldings	2.6	G													

SUBMITTAL REGISTER

CONTRACT NO. 1558046

TITLE AND LOCATION: MARINE SOP SCHOOL 120 MAN CLASSROOMS

CONTRACTOR:

ACTIVITY NO	TRANSMITTAL NO	SPEC SECT	DESCRIPTION ITEM SUBMITTED	PARAGRAPH #	CLASSIFICATION	GOVT OR A/E REVWR	CONTRACTOR: SCHEDULE DATES			CONTRACTOR ACTION			APPROVING AUTHORITY					
							SUBMIT	APPROVAL NEEDED BY	MATERIAL NEEDED BY	ACTION CODE	DATE OF ACTION	DATE FWD TO APPR AUTH/ DATE RCD FROM CONTR	DATE FWD TO OTHER REVIEWER	DATE RCD FROM OTH REVIEWER	ACTION CODE	DATE OF ACTION	MAILED TO CONTR/ DATE RCD FRM APPR AUTH	REMARKS
(a)	(b)	(c)	(d)	(e)	(f)		(g)	(h)	(i)	(j)	(k)	(l)	(m)	(n)	(o)	(p)	(q)	(r)
		09 68 00	Physical Characteristics															
			SD-04 Samples															
			Carpet	2.2	G													
			Moldings	2.6	G													
			Carpet Cushion	2.4	G													
			SD-06 Test Reports															
			Moisture and Alkalinity Tests	3.2	G													
			SD-07 Certificates															
			Indoor Air Quality	1.3.1														
			SD-08 Manufacturer's Instructions															
			Surface Preparation	3.1														
			Installation	3.4														
			SD-10 Operation and Maintenance															
			Data															
			Carpet	2.2	G													
			Cleaning and Protection	3.5	G													
			Maintenance Service	3.7.1														
			SD-11 Closeout Submittals															
			Recycled Content for Carpeting	2.2.1	S													
			Recycled Content for Fiber	2.4.1	S													
			Cushion															
			Indoor Air Quality for Carpet	2.2.1	S													
			Indoor Air Quality for Fiber	2.4.1	S													
			Cushion															
			Indoor Air Quality for Aerosol	2.5	S													
			Adhesives															

SUBMITTAL REGISTER

CONTRACT NO. 1558046

TITLE AND LOCATION: MARINE SOP SCHOOL 120 MAN CLASSROOMS

CONTRACTOR

ACTIVITY NO	TRANSMITTAL NO	SPEC SECT	DESCRIPTION ITEM SUBMITTED	PARAGRAPH #	CLASSIFICATION	GOVT OR A/E REVWR	CONTRACTOR: SCHEDULE DATES			CONTRACTOR ACTION			APPROVING AUTHORITY					REMARKS
							SUBMIT	APPROVAL NEEDED BY	MATERIAL NEEDED BY	ACTION CODE	DATE OF ACTION	DATE FWD TO APPR AUTH/ DATE RCD FROM CONTR	DATE FWD TO OTHER REVIEWER	DATE RCD FROM OTH REVIEWER	ACTION CODE	DATE OF ACTION	MAILED TO CONTR/ DATE RCD FRM APPR AUTH	
(a)	(b)	(c)	(d)	(e)	(f)		(g)	(h)	(i)	(j)	(k)	(l)	(m)	(n)	(o)	(p)	(q)	(r)
		09 68 00	Indoor Air Quality for Non-Aerosol	2.5	S													
			Adhesives															
			Indoor Air Quality for Concrete	2.5	S													
			Primer															
			Warranty	1.6														
		09 69 33.00 22	SD-02 Shop Drawings															
			Measured drawings and details	1.11	G	ID												
			SD-03 Product Data															
			Low profile access flooring	2.1	G	ID												
			Manufacturer's Literature and	1.12	G	ID												
			Data															
			SD-04 Samples															
			Low profile access flooring	2.1	G	ID												
			SD-07 Certificates															
			Flame Spread Rating	1.12														
		09 90 00	SD-03 Product Data															
			Local/Regional Materials	1.9.1														
			Environmental Data	1.9.2														
			Materials	2.1														
			Coating	2.1	G													
			Manufacturer's Technical Data	2.1														
			Sheets															
			Sealant	3.2.5														
			SD-04 Samples															
			Color	1.11	G													
			SD-07 Certificates															

SUBMITTAL REGISTER

CONTRACT NO. 1558046

TITLE AND LOCATION: MARINE SOP SCHOOL 120 MAN CLASSROOMS

CONTRACTOR:

ACTIVITY NO	TRANSMITTAL NO	SPEC SECT	DESCRIPTION ITEM SUBMITTED	PARAG # RAPH	CLASSIFICATION	GOVT OR A/E REVWR	CONTRACTOR: SCHEDULE DATES			CONTRACTOR ACTION			APPROVING AUTHORITY					
							SUBMIT	APPROVAL NEEDED BY	MATERIAL NEEDED BY	ACTION CODE	DATE OF ACTION	DATE FWD TO APPR AUTH/ DATE RCD FROM CONTR	DATE FWD TO OTHER REVIEWER	DATE RCD FROM OTH REVIEWER	ACTION CODE	DATE OF ACTION	MAILED TO CONTR/ DATE RCD FRM APPR AUTH	REMARKS
(a)	(b)	(c)	(d)	(e)	(f)		(g)	(h)	(i)	(j)	(k)	(l)	(m)	(n)	(o)	(p)	(q)	(r)
		09 90 00	Applicator's qualifications	1.3														
			Qualification Testing	1.4.1.2	G													
			SD-08 Manufacturer’s Instructions															
			Application instructions	3.3.1														
			Mixing	3.7.2														
			Manufacturer's Material Safety	1.7.2														
			Data Sheets															
			SD-10 Operation and Maintenance															
			Data															
			Coatings:	2.1	G													
		10 14 00.10	SD-02 Shop Drawings															
			Approved Detail Drawings	3.1	G													
			SD-03 Product Data															
			Modular Exterior Signage System	2.1														
			Installation	3.1														
			Exterior Signage	1.2	G													
			Wind Load Requirements	1.2.1														
			SD-04 Samples															
			Exterior Signage	1.2	G													
			SD-10 Operation and Maintenance															
			Data															
			Protection and Cleaning	3.1.2	G													
		10 14 00.20	SD-02 Shop Drawings															
			Detail Drawings	1.4.2	G													
			SD-03 Product Data															
			Installation	3.1	G													

SUBMITTAL REGISTER

CONTRACT NO. 1558046

TITLE AND LOCATION: MARINE SOP SCHOOL 120 MAN CLASSROOMS

CONTRACTOR:

ACTIVITY NO	TRANSMITTAL NO	SPEC SECT	DESCRIPTION ITEM SUBMITTED	PARAGRAPH #	CLASSIFICATION	GOVT OR A/E REVWR	CONTRACTOR: SCHEDULE DATES			CONTRACTOR ACTION			APPROVING AUTHORITY					
							SUBMIT	APPROVAL NEEDED BY	MATERIAL NEEDED BY	ACTION CODE	DATE OF ACTION	DATE FWD TO APPR AUTH/ DATE RCD FROM CONTR	DATE FWD TO OTHER REVIEWER	DATE RCD FROM OTH REVIEWER	ACTION CODE	DATE OF ACTION	MAILED TO CONTR/ DATE RCD FRM APPR AUTH	REMARKS
(a)	(b)	(c)	(d)	(e)	(f)		(g)	(h)	(i)	(j)	(k)	(l)	(m)	(n)	(o)	(p)	(q)	(r)
		10 14 00.20	Warranty	1.6	G													
			SD-04 Samples															
			Interior Signage	1.4.1	G													
			SD-10 Operation and Maintenance															
			Data															
			Approved Manufacturer's	3.1	G													
			Instructions															
			Protection and Cleaning	3.1.2	G													
		10 26 00	SD-02 Shop Drawings															
			Corner Guards	2.2	G	ID												
			SD-03 Product Data															
			Corner Guards	2.2	G													
			SD-04 Samples															
			Finish	2.4	G													
			SD-06 Test Reports															
			Corner Guards	2.2														
			SD-07 Certificates															
			Corner Guards	2.2														
		12 24 13	SD-02 Shop Drawings															
			Installation	3.3	G													
			SD-03 Product Data															
			Window Shades	2.1	G													
			SD-04 Samples															
			Window Shades	2.1	G													
			SD-06 Test Reports															
			Window Shades	2.1														

SUBMITTAL REGISTER

CONTRACT NO. 1558046

TITLE AND LOCATION: MARINE SOP SCHOOL 120 MAN CLASSROOMS

CONTRACTOR:

ACTIVITY NO	TRANSMITTAL NO	SPEC SECT	DESCRIPTION ITEM SUBMITTED	PARAGRAPH #	CLASSIFICATION	GOVT OR A/E REVWR	CONTRACTOR: SCHEDULE DATES			CONTRACTOR ACTION			APPROVING AUTHORITY					
							SUBMIT	APPROVAL NEEDED BY	MATERIAL NEEDED BY	ACTION CODE	DATE OF ACTION	DATE FWD TO APPR AUTH/ DATE RCD FROM CONTR	DATE FWD TO OTHER REVIEWER	DATE RCD FROM OTH REVIEWER	ACTION CODE	DATE OF ACTION	MAILED TO CONTR/ DATE RCD FRM APPR AUTH	REMARKS
(a)	(b)	(c)	(d)	(e)	(f)		(g)	(h)	(i)	(j)	(k)	(l)	(m)	(n)	(o)	(p)	(q)	(r)
		12 24 13	SD-08 Manufacturer’s Instructions															
			Window Shades	2.1														
			SD-10 Operation and Maintenance															
			Data															
			Window Shades	2.1														
		12 48 13	SD-02 Shop Drawings															
			Installation Drawings	3.2	G													
			Detail Drawings	3.2	G													
			Custom Graphics Drawings	3.2	G													
			SD-03 Product Data															
			recycled material content	Part 2														
			Entrance Floor Mats and Frames	Part 2	S													
			protective flooring materials	Part 2	S													
			protective flooring materials	Part 2	S													
			SD-04 Samples															
			Manufacturer's Standard Color	Part 2														
			Chart															
			Entrance Floor Matsand Frames	Part 2	G													
			assembled sections of floor mat	Part 2	G													
			SD-08 Manufacturer’s Instructions															
			manufacturer's instructions.	3.2	G													
			SD-10 Operation and Maintenance															
			Data															
			Protection, Maintenance, and	3.2	G													
			Repair Information															
		12 93 00	SD-02 Shop Drawings															

SUBMITTAL REGISTER

CONTRACT NO. 1558046

TITLE AND LOCATION: MARINE SOP SCHOOL 120 MAN CLASSROOMS

CONTRACTOR:

ACTIVITY NO	TRANSMITTAL NO	SPEC SECT	DESCRIPTION ITEM SUBMITTED	PARAGRAPH #	CLASSIFICATION	GOVT OR A/E REVWR	CONTRACTOR: SCHEDULE DATES			CONTRACTOR ACTION			APPROVING AUTHORITY				MAILED TO CONTR/	
							SUBMIT	APPROVAL NEEDED BY	MATERIAL NEEDED BY	ACTION CODE	DATE OF ACTION	DATE FWD TO APPR AUTH/ DATE RCD FROM CONTR	DATE FWD TO OTHER REVIEWER	DATE RCD FROM OTH REVIEWER	ACTION CODE	DATE OF ACTION	DATE RCD FRM APPR AUTH	REMARKS
(a)	(b)	(c)	(d)	(e)	(f)		(g)	(h)	(i)	(j)	(k)	(l)	(m)	(n)	(o)	(p)	(q)	(r)
		12 93 00	Benches and Chairs	2.5	G													
			Tables	2.10	G													
			Shelters	2.9	G													
			Bicycle Racks	2.6	G													
			Planters		G													
			Bollards	2.7	G													
			Tree Grates		G													
			Assembly Instruction Drawings	1.4.3														
			SD-03 Product Data															
			Benches and Chairs	2.5														
			Tables	2.10														
			Shelters	2.9														
			Bicycle Racks	2.6														
			Planters															
			Bollards	2.7														
			Tree Grates															
			Recycled Content for steel	2.1.1	S													
			components															
			Recycled Content for aluminum	2.1.4	S													
			components															
			Recycled Content for HDPE		S													
			components															
			Waste Receptacles															
			SD-04 Samples															
			Finish	2.3.4	G													
			SD-06 Test Reports															

SUBMITTAL REGISTER

CONTRACT NO. 1558046

TITLE AND LOCATION: MARINE SOP SCHOOL 120 MAN CLASSROOMS

CONTRACTOR

ACTIVITY NO	TRANSMITTAL NO	SPEC SECT	DESCRIPTION ITEM SUBMITTED	PARAGRAPH #	CLASSIFICATION	GOVT OR A/E REVWR	CONTRACTOR: SCHEDULE DATES			CONTRACTOR ACTION			APPROVING AUTHORITY					
							SUBMIT	APPROVAL NEEDED BY	MATERIAL NEEDED BY	ACTION CODE	DATE OF ACTION	DATE FWD TO APPR AUTH/ DATE RCD FROM CONTR	DATE FWD TO OTHER REVIEWER	DATE RCD FROM OTH REVIEWER	ACTION CODE	DATE OF ACTION	MAILED TO CONTR/ DATE RCD FRM APPR AUTH	REMARKS
(a)	(b)	(c)	(d)	(e)	(f)		(g)	(h)	(i)	(j)	(k)	(l)	(m)	(n)	(o)	(p)	(q)	(r)
		12 93 00	Testing	3.3														
			SD-07 Certificates															
			Primer Certificate	1.4.4														
			Powder Coatings Certificate	1.4.5														
			Certified Sustainably Harvested		S													
			lumber															
			Certified Sustainably Harvested		S													
			wood for wood seats and table															
			tops															
			Certified Sustainably Harvested	2.5.2	S													
			wood for wood benches and chairs															
			Certified Sustainably Harvested		S													
			wood for wood containers															
			Certified Sustainably Harvested	2.9.1.3	S													
			wood for wood shelters															
			Certified Sustainably Harvested	2.10.8	S													
			wood for wood tables															
		13 34 19	SD-01 Preconstruction Submittals															
			Manufacturer's Qualifications	1.6.3	G													
			SD-02 Shop Drawings															
			Detail Drawings	1.2.1.7	G													
			Detail Drawings	1.6.1	G													
			SD-03 Product Data															
			Manufacturer's catalog data	1.6.1	G													
			SD-04 Samples															
			Coil Stock	1.6.1														

SUBMITTAL REGISTER

CONTRACT NO. 1558046

TITLE AND LOCATION: MARINE SOP SCHOOL 120 MAN CLASSROOMS

CONTRACTOR:

ACTIVITY NO	TRANSMITTAL NO	SPEC SECT	DESCRIPTION ITEM SUBMITTED	PARAGRAPH #	CLASSIFICATION	GOVT OR A/E REVWR	CONTRACTOR: SCHEDULE DATES			CONTRACTOR ACTION			APPROVING AUTHORITY					
							SUBMIT	APPROVAL NEEDED BY	MATERIAL NEEDED BY	ACTION CODE	DATE OF ACTION	DATE FWD TO APPR AUTH/ DATE RCD FROM CONTR	DATE FWD TO OTHER REVIEWER	DATE RCD FROM OTH REVIEWER	ACTION CODE	DATE OF ACTION	MAILED TO CONTR/ DATE RCD FRM APPR AUTH	REMARKS
(a)	(b)	(c)	(d)	(e)	(f)		(g)	(h)	(i)	(j)	(k)	(l)	(m)	(n)	(o)	(p)	(q)	(r)
		13 34 19	Coil Stock	2.1.8														
			Roof Panels	1.2.1.9														
			Wall Panels	1.2.1.9														
			Fasteners	2.5.2														
			Metal Closure Strips	2.8.1	G													
			Vapor Barrier	1.6.10	G													
			Manufacturer's color charts and	2.4.2	G													
			chips															
			SD-05 Design Data															
			descriptive and technical	1.6.1	G													
			literature															
			building design analysis	1.6.1	G													
			SD-06 Test Reports															
			test reports	1.6.1	G													
			Coatings and base metals	1.6.1	G													
			Factory Color Finish Performance	1.6.1	G													
			Requirements															
			SD-07 Certificates															
			system components	1.6.1	G													
			Coil Stock	1.6.1	G													
			Coil Stock	2.1.8	G													
			Aluminized Steel Repair Paint	1.6.1	G													
			Galvanizing Repair Paint	1.6.1	G													
			Enamel Repair Paint	1.6.1	G													
			Qualification of Manufacturer	1.6.1	G													
			Qualification of Erector	1.6.1	G													

SUBMITTAL REGISTER

CONTRACT NO. 1558046

TITLE AND LOCATION: MARINE SOP SCHOOL 120 MAN CLASSROOMS

CONTRACTOR

ACTIVITY NO	TRANSMITTAL NO	SPEC SECT	DESCRIPTION ITEM SUBMITTED	PARAG # RAPH	CLASSIFICATION	GOVT OR A/E REVWR	CONTRACTOR: SCHEDULE DATES			CONTRACTOR ACTION			APPROVING AUTHORITY				MAILED TO CONTR/ DATE RCD FRM APPR AUTH	REMARKS
							SUBMIT	APPROVAL NEEDED BY	MATERIAL NEEDED BY	ACTION CODE	DATE OF ACTION	DATE FWD TO APPR AUTH/ DATE RCD FROM CONTR	DATE FWD TO OTHER REVIEWER	DATE RCD FROM OTH REVIEWER	ACTION CODE	DATE OF ACTION		
(a)	(b)	(c)	(d)	(e)	(f)		(g)	(h)	(i)	(j)	(k)	(l)	(m)	(n)	(o)	(p)	(q)	(r)
		13 34 19	SD-08 Manufacturer’s Instructions															
			Installation of Roof and Wall	1.6.2	G													
			panels															
			shipping, handling, and storage	1.7	G													
			SD-11 Closeout Submittals															
			Manufacturer's Warranty	3.14.1	G													
			Contractor's Warranty for	3.14.2	G													
			Installation															
		21 13 13.00 20	SD-02 Shop Drawings															
			Shop Drawings	1.5.2	G													
			SD-03 Product Data															
			Pipe	2.2.1	G													
			Fittings	2.2.1	G													
			Valves	2.2.5	G													
			Sprinklers	2.2.4	G													
			Pipe hangers and supports	2.2.6	G													
			Sprinkler Alarm Switches	2.3.1	G													
			Fire department connections	2.2.7	G													
			Mechanical couplings	2.2.1	G													
			Backflow Prevention Assembly	2.2.8	G													
			Hydraulic Calculations	1.3	G													
			Hydraulic Calculations	1.3.5	G													
			Hydraulic Calculations	1.3.6	G													
			SD-05 Design Data															
			Hydraulic Calculations	1.3	G													
			Hydraulic Calculations	1.3	G													

SUBMITTAL REGISTER

CONTRACT NO. 1558046

TITLE AND LOCATION: MARINE SOP SCHOOL 120 MAN CLASSROOMS

CONTRACTOR

ACTIVITY NO	TRANSMITTAL NO	SPEC SECT	DESCRIPTION ITEM SUBMITTED	PARAGRAPH #	CLASSIFICATION	GOVT OR A/E REVWR	CONTRACTOR: SCHEDULE DATES			CONTRACTOR ACTION			APPROVING AUTHORITY					
							SUBMIT	APPROVAL NEEDED BY	MATERIAL NEEDED BY	ACTION CODE	DATE OF ACTION	DATE FWD TO APPR AUTH/ DATE RCD FROM CONTR	DATE FWD TO OTHER REVIEWER	DATE RCD FROM OTH REVIEWER	ACTION CODE	DATE OF ACTION	MAILED TO CONTR/ DATE RCD FRM APPR AUTH	REMARKS
(a)	(b)	(c)	(d)	(e)	(f)		(g)	(h)	(i)	(j)	(k)	(l)	(m)	(n)	(o)	(p)	(q)	(r)
		21 13 13.00 20	Hydraulic Calculations	1.3.5	G													
			Hydraulic Calculations	1.3.5	G													
			Hydraulic Calculations	1.3.6	G													
			Hydraulic Calculations	1.3.6	G													
			SD-06 Test Reports															
			request to schedule Preliminary	3.6	G													
			Tests															
			Preliminary Test Report	3.6	G													
			request to schedule Final	3.7	G													
			Acceptance Test															
			Final Acceptance Test Report	3.7	G													
			SD-07 Certificates															
			Inspection by Fire Protection	3.1	G													
			Engineer															
			Fire Protection Engineer	1.5.1	G													
			hydraulic calculations	1.3														
			hydraulic calculations	1.3.5														
			hydraulic calculations	1.3.6														
			Sprinkler System Installer	1.5.2	G													
			SD-10 Operation and Maintenance															
			Data															
			Operating and Maintenance	3.8														
			Instructions															
			SD-11 Closeout Submittals															
			As-built drawings	3.7														
			On-site training	3.8														

SUBMITTAL REGISTER

CONTRACT NO. 1558046

TITLE AND LOCATION: MARINE SOP SCHOOL 120 MAN CLASSROOMS

CONTRACTOR:

ACTIVITY NO	TRANSMITTAL NO	SPEC SECT	DESCRIPTION ITEM SUBMITTED	PARAGRAPH #	CLASSIFICATION	GOVT OR A/E REVWR	CONTRACTOR: SCHEDULE DATES			CONTRACTOR ACTION			APPROVING AUTHORITY					
							SUBMIT	APPROVAL NEEDED BY	MATERIAL NEEDED BY	ACTION CODE	DATE OF ACTION	DATE FWD TO APPR AUTH/ DATE RCD FROM CONTR	DATE FWD TO OTHER REVIEWER	DATE RCD FROM OTH REVIEWER	ACTION CODE	DATE OF ACTION	MAILED TO CONTR/ DATE RCD FRM APPR AUTH	REMARKS
(a)	(b)	(c)	(d)	(e)	(f)		(g)	(h)	(i)	(j)	(k)	(l)	(m)	(n)	(o)	(p)	(q)	(r)
		21 21 00	SD-02 Shop Drawings															
			Sprinklers and piping system layout	1.3	G													
			Sprinklers and piping system layout	1.3.5	G													
			Electrical wiring diagrams	1.3.5	G													
			SD-03 Product Data															
			Piping	2.1	G													
			Valves	2.1.4	G													
			Sprinklers	2.1.2	G													
			Pipe hangers and supports	2.1.3	G													
			Backflow prevention assemblies	2.1.6	G													
			SD-05 Design Data															
			Sprinkler system design	1.3	G													
			SD-06 Test Reports															
			Preliminary tests	3.3.1	G													
			SD-07 Certificates															
			Qualifications of installer	1.5.1	G													
			SD-11 Closeout Submittals															
			As-built drawings of each system	1.3.6	G													
		22 00 00	SD-03 Product Data															
			Materials	1.3	G													
		22 05 48.00 20	SD-02 Shop Drawings															
			Machinery Bases	2.6														
			SD-03 Product Data															
			Isolators	2.3														

SUBMITTAL REGISTER

CONTRACT NO. 1558046

TITLE AND LOCATION: MARINE SOP SCHOOL 120 MAN CLASSROOMS

CONTRACTOR:

ACTIVITY NO	TRANSMITTAL NO	SPEC SECT	DESCRIPTION ITEM SUBMITTED	PARAG # RAPH	CLASSIFICATION	GOVT OR A/E REVWR	CONTRACTOR: SCHEDULE DATES			CONTRACTOR ACTION			APPROVING AUTHORITY					
							SUBMIT	APPROVAL NEEDED BY	MATERIAL NEEDED BY	ACTION CODE	DATE OF ACTION	DATE FWD TO APPR AUTH/ DATE RCD FROM CONTR	DATE FWD TO OTHER REVIEWER	DATE RCD FROM OTH REVIEWER	ACTION CODE	DATE OF ACTION	MAILED TO CONTR/ DATE RCD FRM APPR AUTH	REMARKS
(a)	(b)	(c)	(d)	(e)	(f)		(g)	(h)	(i)	(j)	(k)	(l)	(m)	(n)	(o)	(p)	(q)	(r)
		22 05 48.00 20	Flexible Connectors	2.7														
			Flexible Duct Connectors	2.8														
			Pipe Guides	2.9														
			Vertical Stops	3.1.3														
			Thrust Restraints	2.10														
			Machinery Bases	2.6														
			Machinery Foundations and	3.1.11														
			Subbases															
			Machinery Manufacturer's Sound	1.4.2														
			Data															
			SD-05 Design Data															
			Machinery Bases	2.6														
			Machinery	1.4.3														
			Machinery Over 300 Pounds	1.4.4														
			SD-06 Test Reports															
			Equipment Vibration Tests	3.2.3.1														
			Equipment Sound Level Tests	3.2.3.2														
			Protected Spring Isolators	2.4														
			SD-08 Manufacturer’s Instructions															
			Vibration and Noise Isolation	3.1.1														
			Components															
		23 00 00	SD-02 Shop Drawings															
			Detail Drawings	1.4.5	G													
			SD-03 Product Data															
			Metal Ductwork	2.10.1	G													
			Metallic Flexible Duct	2.10.1.1	G													

SUBMITTAL REGISTER

CONTRACT NO. 1558046

TITLE AND LOCATION: MARINE SOP SCHOOL 120 MAN CLASSROOMS

CONTRACTOR:

ACTIVITY NO	TRANSMITTAL NO	SPEC SECT	DESCRIPTION ITEM SUBMITTED	PARAGRAPH #	CLASSIFICATION	GOVT OR A/E REVWR	CONTRACTOR: SCHEDULE DATES			CONTRACTOR ACTION			APPROVING AUTHORITY					
							SUBMIT	APPROVAL NEEDED BY	MATERIAL NEEDED BY	ACTION CODE	DATE OF ACTION	DATE FWD TO APPR AUTH/ DATE RCD FROM CONTR	DATE FWD TO OTHER REVIEWER	DATE RCD FROM OTH REVIEWER	ACTION CODE	DATE OF ACTION	MAILED TO CONTR/ DATE RCD FRM APPR AUTH	REMARKS
(a)	(b)	(c)	(d)	(e)	(f)		(g)	(h)	(i)	(j)	(k)	(l)	(m)	(n)	(o)	(p)	(q)	(r)
		23 00 00	Insulated Nonmetallic Flexible	2.10.1.2	G													
			Duct Runouts															
			Duct Connectors	2.10.1.2	G													
			Duct Access Doors	2.10.2	G													
			Manual Balancing Dampers	2.10.3	G													
			Diffusers	2.10.6.1	G													
			Fabric Air Diffusers	2.10.6.3	G													
			Registers and Grilles	2.10.6.2	G													
			Louvers	2.10.7	G													
			Centrifugal Fans	2.11.1.1	G													
			In-Line Centrifugal Fans	2.11.1.2	G													
			Panel Type Power Wall	2.11.1.3	G													
			Ventilators															
			Test Procedures	1.4.6														
			SD-06 Test Reports															
			Performance Tests	3.12	G													
			SD-07 Certificates															
			Ozone Depleting Substances	1.4.3														
			SD-08 Manufacturer’s Instructions															
			Manufacturer's Installation	3.3	G													
			Instructions															
			Operation and Maintenance	3.14.2	G													
			Training															
			SD-10 Operation and Maintenance															
			Data															

SUBMITTAL REGISTER

CONTRACT NO. 1558046

TITLE AND LOCATION: MARINE SOP SCHOOL 120 MAN CLASSROOMS

CONTRACTOR:

ACTIVITY NO	TRANSMITTAL NO	SPEC SECT	DESCRIPTION ITEM SUBMITTED	PARAG # RAPH	CLASSIFICATION	GOVT OR A/E REVWR	CONTRACTOR: SCHEDULE DATES			CONTRACTOR ACTION			APPROVING AUTHORITY					
							SUBMIT	APPROVAL NEEDED BY	MATERIAL NEEDED BY	ACTION CODE	DATE OF ACTION	DATE FWD TO APPR AUTH/ DATE RCD FROM CONTR	DATE FWD TO OTHER REVIEWER	DATE RCD FROM OTH REVIEWER	ACTION CODE	DATE OF ACTION	MAILED TO CONTR/ DATE RCD FRM APPR AUTH	REMARKS
(a)	(b)	(c)	(d)	(e)	(f)		(g)	(h)	(i)	(j)	(k)	(l)	(m)	(n)	(o)	(p)	(q)	(r)
		23 00 00	Operation and Maintenance	3.14.1	G													
			Manuals															
			Manual Balancing Dampers	2.10.3	G													
			Centrifugal Fans	2.11.1.1	G													
			In-Line Centrifugal Fans	2.11.1.2	G													
			Panel Type Power Wall	2.11.1.3	G													
			Ventilators															
			SD-11 Closeout Submittals															
			Energy Efficient Equipment	2.1.1	S													
			Reduce Volatile Organic	2.1.2	S													
			Compounds (VOC)															
			Indoor Air Quality During	3.1	S													
			Construction															
			Ozone Depleting Substances for	2.1.3	S													
			Refrigerants															
		23 03 00.00 20	SD-11 Closeout Submittals															
			Energy Efficient Equipment for	2.1.1	S													
			Motors															
			Reduce Volatile Organic	2.1.2	S													
			Compounds (VOC)															
		23 05 93.00 22	SD-01 Preconstruction Submittals															
			Reports of Existing Conditions		G													
			Independent TAB Agency and	1.5.1	G													
			Personnel Qualifications															
			Pre-Field Engineering Report	3.7	G													
			SD-06 Test Reports															

SUBMITTAL REGISTER

CONTRACT NO. 1558046

TITLE AND LOCATION: MARINE SOP SCHOOL 120 MAN CLASSROOMS

CONTRACTOR

ACTIVITY NO	TRANSMITTAL NO	SPEC SECT	DESCRIPTION ITEM SUBMITTED	PARAGRAPH #	CLASSIFICATION	GOVT OR A/E REVWR	CONTRACTOR: SCHEDULE DATES			CONTRACTOR ACTION			APPROVING AUTHORITY					
							SUBMIT	APPROVAL NEEDED BY	MATERIAL NEEDED BY	ACTION CODE	DATE OF ACTION	DATE FWD TO APPR AUTH/ DATE RCD FROM CONTR	DATE FWD TO OTHER REVIEWER	DATE RCD FROM OTH REVIEWER	ACTION CODE	DATE OF ACTION	MAILED TO CONTR/ DATE RCD FRM APPR AUTH	REMARKS
(a)	(b)	(c)	(d)	(e)	(f)		(g)	(h)	(i)	(j)	(k)	(l)	(m)	(n)	(o)	(p)	(q)	(r)
		23 05 93.00 22	Completed Pre-Final DALT	3.3.6	G													
			Report															
			Certified Final DALT Report	3.3.9	G													
			Proportional Balancing	3.4.8.1	G													
			Proportional Balancing	3.7	G													
			Season 1	3.4.8.2	G													
			Season 1	3.7	G													
			Season 2	3.4.8.2	G													
			Season 2	3.7	G													
			SD-07 Certificates															
			Independent TAB Agency and	1.5.1	G													
			Personnel Qualifications															
			Advance Notice of Pre-Final	3.3.3	G													
			DALT Field Work															
			Proportional Balancing	3.4.8.1	G													
			Proportional Balancing	3.7	G													
			Season 1	3.4.8.2	G													
			Season 1	3.7	G													
			Season 2	3.4.8.2	G													
			Season 2	3.7	G													
		23 07 00	SD-03 Product Data															
			Pipe Insulation Systems	2.4	G													
			Pipe Insulation Systems	3.2	G													
			Duct Insulation Systems	3.3	G													
			Equipment Insulation Systems	3.4	G													
			SD-04 Samples															

SUBMITTAL REGISTER

CONTRACT NO. 1558046

TITLE AND LOCATION: MARINE SOP SCHOOL 120 MAN CLASSROOMS

CONTRACTOR:

ACTIVITY NO	TRANSMITTAL NO	SPEC SECT	DESCRIPTION ITEM SUBMITTED	PARAGRAPH #	CLASSIFICATION	GOVT OR A/E REVWR	CONTRACTOR: SCHEDULE DATES			CONTRACTOR ACTION			APPROVING AUTHORITY					
							SUBMIT	APPROVAL NEEDED BY	MATERIAL NEEDED BY	ACTION CODE	DATE OF ACTION	DATE FWD TO APPR AUTH/ DATE RCD FROM CONTR	DATE FWD TO OTHER REVIEWER	DATE RCD FROM OTH REVIEWER	ACTION CODE	DATE OF ACTION	MAILED TO CONTR/ DATE RCD FRM APPR AUTH	REMARKS
(a)	(b)	(c)	(d)	(e)	(f)		(g)	(h)	(i)	(j)	(k)	(l)	(m)	(n)	(o)	(p)	(q)	(r)
		23 07 00	Thermal Insulation	2.3.1.3	G													
			SD-08 Manufacturer’s Instructions															
			Pipe Insulation Systems	2.4	G													
			Pipe Insulation Systems	3.2	G													
			Duct Insulation Systems	3.3	G													
			Equipment Insulation Systems	3.4	G													
			SD-11 Closeout Submittals															
			Reduce Volatile Organic	2.1.1	S													
			Compounds (VOC)															
			Recycled Content	2.1.2	S													
		23 09 00.00 22	SD-02 Shop Drawings															
			DDC Contractor Design Drawings	3.2	G													
			Draft As-Built Drawings	3.2	G													
			Final As-Built Drawings	3.2	G													
			SD-03 Product Data															
			Programming Software	1.8.3	G													
			Controller Application Programs	1.8.4	G													
			Configuration Software	1.8.1	G													
			Controller Configuration Settings	1.8.2	G													
			Manufacturer's Product Data	2.2	G													
			Niagara Framework Supervisory	1.8.5	G													
			Gateway Backups															
			Niagara Framework Engineering	1.8.6	G													
			Tool															
			Niagara Framework Wizards		G													
			SD-06 Test Reports															

SUBMITTAL REGISTER

CONTRACT NO. 1558046

TITLE AND LOCATION: MARINE SOP SCHOOL 120 MAN CLASSROOMS

CONTRACTOR:

ACTIVITY NO	TRANSMITTAL NO	SPEC SECT	DESCRIPTION ITEM SUBMITTED	PARAGRAPH #	CLASSIFICATION	GOVT OR A/E REVWR	CONTRACTOR: SCHEDULE DATES			CONTRACTOR ACTION			APPROVING AUTHORITY				MAILED TO CONTR/ DATE RCD FRM APPR AUTH	REMARKS
							SUBMIT	APPROVAL NEEDED BY	MATERIAL NEEDED BY	ACTION CODE	DATE OF ACTION	DATE FWD TO APPR AUTH/ DATE RCD FROM CONTR	DATE FWD TO OTHER REVIEWER	DATE RCD FROM OTH REVIEWER	ACTION CODE	DATE OF ACTION		
(a)	(b)	(c)	(d)	(e)	(f)		(g)	(h)	(i)	(j)	(k)	(l)	(m)	(n)	(o)	(p)	(q)	(r)
		23 09 00.00 22	Start-Up Testing Report	3.4.2	G													
			PVT Procedures		G													
			PVT Report		G													
			Pre-Construction Quality Control	1.10.1	G													
			(QC) Checklist															
			Post-Construction Quality Control	1.10.2	G													
			(QC) Checklist															
			Control Contractor's Performance	3.5.5	G													
			Verification Testing Plan															
			Equipment Supplier's	3.5.3.1	G													
			Performance Verification Testing															
			Plan															
			Endurance Testing Results	3.5.8.3	G													
			Performance Verification Test	3.5.9	G													
			Report															
			Bus Waveform Report	3.5.10	G													
			SD-07 Certificates															
			Contractor Qualifications	1.9														
			SD-10 Operation and Maintenance															
			Data															
			Operation and Maintenance	3.6	G													
			(O&M) Instructions															
			Training Documentation	3.8.1	G													
			SD-11 Closeout Submittals															
			Enclosure Keys	2.5	G													
			Password Summary Report	3.1.7.1	G													

SUBMITTAL REGISTER

CONTRACT NO. 1558046

TITLE AND LOCATION: MARINE SOP SCHOOL 120 MAN CLASSROOMS

CONTRACTOR

ACTIVITY NO	TRANSMITTAL NO	SPEC SECT	DESCRIPTION ITEM SUBMITTED	PARAGRAPH #	CLASSIFICATION	GOVT OR A/E REVWR	CONTRACTOR: SCHEDULE DATES			CONTRACTOR ACTION			APPROVING AUTHORITY					
							SUBMIT	APPROVAL NEEDED BY	MATERIAL NEEDED BY	ACTION CODE	DATE OF ACTION	DATE FWD TO APPR AUTH/ DATE RCD FROM CONTR	DATE FWD TO OTHER REVIEWER	DATE RCD FROM OTH REVIEWER	ACTION CODE	DATE OF ACTION	MAILED TO CONTR/ DATE RCD FRM APPR AUTH	REMARKS
(a)	(b)	(c)	(d)	(e)	(f)		(g)	(h)	(i)	(j)	(k)	(l)	(m)	(n)	(o)	(p)	(q)	(r)
		23 09 00.00 22	Closeout Quality Control (QC)	1.10.3	G													
			Checklist															
		23 23 00	SD-02 Shop Drawings															
			Refrigerant Piping System	2.3	G													
			SD-03 Product Data															
			Refrigerant Piping System	2.3														
			Spare Parts	1.5.2														
			Qualifications	1.3.1														
			Refrigerant Piping Tests	3.5														
			Verification of Dimensions	3.1														
			SD-06 Test Reports															
			Refrigerant Piping Tests	3.5														
			SD-07 Certificates															
			Service Organization	2.1														
			SD-10 Operation and Maintenance															
			Data															
			Maintenance	1.5	G													
			Operation and Maintenance	3.4	G													
			Manuals															
		23 81 00.00 20	SD-02 Shop Drawings															
			Field-Assembled Refrigerant	2.8.2														
			Piping															
			Control System Wiring Diagrams	1.4.2	G													
			SD-03 Product Data															
			Ductless Split Air Conditioners	2.3	G													
			Heat Pumps	2.4	G													

SUBMITTAL REGISTER

CONTRACT NO. 1558046

TITLE AND LOCATION: MARINE SOP SCHOOL 120 MAN CLASSROOMS

CONTRACTOR:

ACTIVITY NO	TRANSMITTAL NO	SPEC SECT	DESCRIPTION ITEM SUBMITTED	PARAGRAPH #	CLASSIFICATION	GOVT OR A/E REVWR	CONTRACTOR: SCHEDULE DATES			CONTRACTOR ACTION			APPROVING AUTHORITY					
							SUBMIT	APPROVAL NEEDED BY	MATERIAL NEEDED BY	ACTION CODE	DATE OF ACTION	DATE FWD TO APPR AUTH/ DATE RCD FROM CONTR	DATE FWD TO OTHER REVIEWER	DATE RCD FROM OTH REVIEWER	ACTION CODE	DATE OF ACTION	MAILED TO CONTR/ DATE RCD FRM APPR AUTH	REMARKS
(a)	(b)	(c)	(d)	(e)	(f)		(g)	(h)	(i)	(j)	(k)	(l)	(m)	(n)	(o)	(p)	(q)	(r)
		23 81 00.00 20	Dedicated Outside Air Unit	2.5	G													
			(DOAS)															
			Dehumidifier	2.6	G													
			Air Filters	2.4.2.4	G													
			Air Filters	2.5.2.6	G													
			Refrigerant	1.5														
			Refrigerant Piping and	2.8	G													
			Accessories															
			SD-06 Test Reports															
			Salt-Spray Tests	2.10.1	G													
			Start-Up and Initial Operational	3.9.3														
			Tests															
			SD-08 Manufacturer's Instructions															
			Ductless Split Air Conditioners	2.3	G													
			Heat Pumps	2.4	G													
			Dedicated Outside Air Unit	2.5	G													
			(DOAS)															
			Refrigerant Piping and	2.8	G													
			Accessories															
			SD-10 Operation and Maintenance															
			Data															
			Ductless Split Air Conditioners	2.3	G													
			Heat Pumps	2.4	G													
			Dedicated Outside Air Unit	2.5	G													
			(DOAS)															
			Dehumidifier	2.6	G													

SUBMITTAL REGISTER

CONTRACT NO. 1558046

TITLE AND LOCATION: MARINE SOP SCHOOL 120 MAN CLASSROOMS

CONTRACTOR:

ACTIVITY NO	TRANSMITTAL NO	SPEC SECT	DESCRIPTION ITEM SUBMITTED	PARAGRAPH #	CLASSIFICATION	GOVT OR A/E REVWR	CONTRACTOR: SCHEDULE DATES			CONTRACTOR ACTION			APPROVING AUTHORITY					
							SUBMIT	APPROVAL NEEDED BY	MATERIAL NEEDED BY	ACTION CODE	DATE OF ACTION	DATE FWD TO APPR AUTH/ DATE RCD FROM CONTR	DATE FWD TO OTHER REVIEWER	DATE RCD FROM OTH REVIEWER	ACTION CODE	DATE OF ACTION	MAILED TO CONTR/ DATE RCD FRM APPR AUTH	REMARKS
(a)	(b)	(c)	(d)	(e)	(f)		(g)	(h)	(i)	(j)	(k)	(l)	(m)	(n)	(o)	(p)	(q)	(r)
		23 81 00.00 20	Air Filters	2.4.2.4	G													
			Air Filters	2.5.2.6	G													
			SD-11 Closeout Submittals															
			Posted Operating Instructions	1.4.4														
			Energy Efficient Equipment for	2.1.1	S													
			Unitary Air Conditioning Equipment															
			Ozone Depleting Substances	2.1.2	S													
			Indoor Air Quality During	3.1.1	S													
			Construction															
		23 82 00.00 20	SD-03 Product Data															
			Unit Heaters	2.2														
			SD-10 Operation and Maintenance															
			Data															
			Unit Heaters	2.2														
			SD-11 Closeout Submittals															
			Energy Efficient Equipment for	2.1.1	S													
			Heating and Cooling Units															
		26 08 00	SD-06 Test Reports															
			Acceptance tests and inspections	3.1	G													
			SD-07 Certificates															
			Qualifications	1.4.1	G													
			Acceptance test and inspections	1.4.3	G													
			procedure															
		26 12 19.10	SD-02 Shop Drawings															
			Pad-mounted transformer	1.5.1	G													
			drawings															

SUBMITTAL REGISTER

CONTRACT NO. 1558046

TITLE AND LOCATION: MARINE SOP SCHOOL 120 MAN CLASSROOMS

CONTRACTOR

ACTIVITY NO	TRANSMITTAL NO	SPEC SECT	DESCRIPTION ITEM SUBMITTED	PARAGRAPH #	CLASSIFICATION	GOVT OR A/E REVWR	CONTRACTOR: SCHEDULE DATES			CONTRACTOR ACTION			APPROVING AUTHORITY				MAILED TO CONTR/ DATE RCD FRM APPR AUTH	REMARKS
							SUBMIT	APPROVAL NEEDED BY	MATERIAL NEEDED BY	ACTION CODE	DATE OF ACTION	DATE FWD TO APPR AUTH/ DATE RCD FROM CONTR	DATE FWD TO OTHER REVIEWER	DATE RCD FROM OTH REVIEWER	ACTION CODE	DATE OF ACTION		
(a)	(b)	(c)	(d)	(e)	(f)		(g)	(h)	(i)	(j)	(k)	(l)	(m)	(n)	(o)	(p)	(q)	(r)
		26 12 19.10	SD-03 Product Data															
			Pad-mounted transformers	2.2	G													
			SD-06 Test Reports															
			Acceptance checks and tests	3.6.1	G													
			SD-07 Certificates															
			Transformer Efficiencies	2.2.2.1	G													
			SD-09 Manufacturer's Field															
			Reports															
			design tests	2.7.2	G													
			routine and other tests	2.7.3	G													
			SD-10 Operation and Maintenance															
			Data															
			Transformer(s)	1.6.1	G													
			SD-11 Closeout Submittals															
			Transformer test schedule	2.7.1	G													
		26 20 00	SD-02 Shop Drawings															
			Panelboards	2.13	G													
			Transformers	2.14	G													
			Cable trays	2.3	G													
			Marking strips	3.1.8.1	G													
			SD-03 Product Data															
			Receptacles	2.12	G													
			Circuit breakers	2.13.3	G													
			Switches	2.10	G													
			Transformers	2.14	G													
			Motor controllers	2.16	G													

SUBMITTAL REGISTER

CONTRACT NO. 1558046

TITLE AND LOCATION: MARINE SOP SCHOOL 120 MAN CLASSROOMS

CONTRACTOR:

ACTIVITY NO	TRANSMITTAL NO	SPEC SECT	DESCRIPTION ITEM SUBMITTED	PARAGRAPH #	CLASSIFICATION	GOVT OR A/E REVWR	CONTRACTOR: SCHEDULE DATES			CONTRACTOR ACTION			APPROVING AUTHORITY					
							SUBMIT	APPROVAL NEEDED BY	MATERIAL NEEDED BY	ACTION CODE	DATE OF ACTION	DATE FWD TO APPR AUTH/ DATE RCD FROM CONTR	DATE FWD TO OTHER REVIEWER	DATE RCD FROM OTH REVIEWER	ACTION CODE	DATE OF ACTION	MAILED TO CONTR/ DATE RCD FRM APPR AUTH	REMARKS
(a)	(b)	(c)	(d)	(e)	(f)		(g)	(h)	(i)	(j)	(k)	(l)	(m)	(n)	(o)	(p)	(q)	(r)
		26 20 00	Manual motor starters	2.17	G													
			Grounding Busbar	2.20.2	G													
			Surge protective devices	2.25	G													
			SD-06 Test Reports															
			600-volt wiring test	3.5.2	G													
			Grounding system test	3.5.5	G													
			Transformer tests	3.5.3	G													
			Ground-fault receptacle test	3.5.4	G													
			SD-07 Certificates															
			Fuses	2.11	G													
			SD-09 Manufacturer's Field															
			Reports															
			Transformer factory tests	2.27.1														
		26 27 14.00 20	SD-02 Shop Drawings															
			Installation Drawings	1.4.1	G													
			SD-03 Product Data															
			Electricity meters	2.1.3	G													
			Current transformer	2.1.2	G													
			communications	2.2	G													
			SD-06 Test Reports															
			Acceptance checks and tests	3.2.1	G													
			System functional verification	3.2.2	G													
			Meter configuration template	2.1.1	G													
			Meter configuration report	3.2.1	G													
			SD-10 Operation and Maintenance															
			Data															

SUBMITTAL REGISTER

CONTRACT NO. 1558046

TITLE AND LOCATION: MARINE SOP SCHOOL 120 MAN CLASSROOMS

CONTRACTOR:

ACTIVITY NO	TRANSMITTAL NO	SPEC SECT	DESCRIPTION ITEM SUBMITTED	PARAGRAPH #	CLASSIFICATION	GOVT OR A/E REVWR	CONTRACTOR: SCHEDULE DATES			CONTRACTOR ACTION			APPROVING AUTHORITY					
							SUBMIT	APPROVAL NEEDED BY	MATERIAL NEEDED BY	ACTION CODE	DATE OF ACTION	DATE FWD TO APPR AUTH/ DATE RCD FROM CONTR	DATE FWD TO OTHER REVIEWER	DATE RCD FROM OTH REVIEWER	ACTION CODE	DATE OF ACTION	MAILED TO CONTR/ DATE RCD FRM APPR AUTH	REMARKS
(a)	(b)	(c)	(d)	(e)	(f)		(g)	(h)	(i)	(j)	(k)	(l)	(m)	(n)	(o)	(p)	(q)	(r)
		26 27 14.00 20	Electricity Meters and	1.5.1	G													
			Accessories															
			SD-11 Closeout Submittals															
			System functional verification	3.2.2	G													
		26 41 00	SD-02 Shop Drawings															
			Overall lightning protection	1.4.1.1	G													
			system															
			Each major component	1.4.1.2	G													
			SD-06 Test Reports															
			Lightning Protection and	1.4.3	G													
			Grounding System Test Plan															
			Lightning Protection and	3.5.1	G													
			Grounding System Test															
			SD-07 Certificates															
			Lightning Protection System	1.2.3	G													
			Installers Documentation															
			Component UL Listed and	1.4.2	G													
			Labeled															
			Lightning protection system	1.4.4	G													
			inspection certificate															
			Roof manufacturer's warranty	3.1.1	G													
		26 51 00	SD-02 Shop Drawings															
			Luminaire Drawings	1.5.1	G													
			Occupancy/Vacancy Sensor	1.5.2	G													
			Coverage Layout															
			SD-03 Product Data															

SUBMITTAL REGISTER

CONTRACT NO. 1558046

TITLE AND LOCATION: MARINE SOP SCHOOL 120 MAN CLASSROOMS

CONTRACTOR

ACTIVITY NO	TRANSMITTAL NO	SPEC SECT	DESCRIPTION ITEM SUBMITTED	PARAGRAPH #	CLASSIFICATION	GOVT OR A/E REVWR	CONTRACTOR: SCHEDULE DATES			CONTRACTOR ACTION			APPROVING AUTHORITY				MAILED TO CONTR/ DATE RCD FRM APPR AUTH	REMARKS
							SUBMIT	APPROVAL NEEDED BY	MATERIAL NEEDED BY	ACTION CODE	DATE OF ACTION	DATE FWD TO APPR AUTH/ DATE RCD FROM CONTR	DATE FWD TO OTHER REVIEWER	DATE RCD FROM OTH REVIEWER	ACTION CODE	DATE OF ACTION		
(a)	(b)	(c)	(d)	(e)	(f)		(g)	(h)	(i)	(j)	(k)	(l)	(m)	(n)	(o)	(p)	(q)	(r)
		26 51 00	Luminaires	2.2	G													
			Light Sources	2.4	G													
			Drivers	2.3	G													
			LED Luminaire Warranty	1.6.1	G													
			Luminaire Design Data	1.5.4	G													
			Vacancy Sensors	2.5.3.2	G													
			Dimming Controllers (Dimmers)	2.5.2	G													
			Exit Signs	2.6.1	G													
			Emergency Lighting Unit (EBU)	2.6.2	G													
			Occupancy Sensors	2.5.3.1	G													
			Ambient Light Level Sensor	3.1.8	G													
			SD-06 Test Reports															
			LED Luminaire - IES LM-79 Test	1.5.5	G													
			Report															
			LED Light Source - IES LM-80	1.5.6	G													
			Test Report															
			LED Light Source - IES TM-21	1.5.7	G													
			Test Report															
			Occupancy/Vacancy Sensor	1.5.8	G													
			Verification Tests															
			Energy Efficiency	1.5.11.3	G													
			SD-07 Certificates															
			Luminaire Useful Life Certificate	1.6.1.1	G													
			LED Driver and Dimming Switch	1.5.3	G													
			Compatibility Certificate															
		26 56 00	SD-01 Preconstruction Submittals															

SUBMITTAL REGISTER

CONTRACT NO. 1558046

TITLE AND LOCATION: MARINE SOP SCHOOL 120 MAN CLASSROOMS

CONTRACTOR

ACTIVITY NO	TRANSMITTAL NO	SPEC SECT	DESCRIPTION ITEM SUBMITTED	PARAGRAPH #	CLASSIFICATION	GOVT OR A/E REVWR	CONTRACTOR: SCHEDULE DATES			CONTRACTOR ACTION			APPROVING AUTHORITY					
							SUBMIT	APPROVAL NEEDED BY	MATERIAL NEEDED BY	ACTION CODE	DATE OF ACTION	DATE FWD TO APPR AUTH/ DATE RCD FROM CONTR	DATE FWD TO OTHER REVIEWER	DATE RCD FROM OTH REVIEWER	ACTION CODE	DATE OF ACTION	MAILED TO CONTR/ DATE RCD FRM APPR AUTH	REMARKS
(a)	(b)	(c)	(d)	(e)	(f)		(g)	(h)	(i)	(j)	(k)	(l)	(m)	(n)	(o)	(p)	(q)	(r)
		26 56 00	Photometric Plan	1.5.2	G													
			LED Luminaire Warranty	1.7.1	G													
			SD-02 Shop Drawings															
			Luminaire drawings	1.5.1.1	G													
			Poles	1.5.1.2	G													
			SD-03 Product Data															
			LED Luminaires	2.2	G													
			Luminaire Light Sources	2.2.2	G													
			Luminaire Power Supply Units	2.2.3	G													
			(Drivers)															
			Motion Sensor	2.3.2	G													
			Photocell	2.3.1	G													
			Concrete poles	2.4.1	G													
			Brackets	2.5	G													
			SD-05 Design Data															
			Design Data for luminaires	1.5.3	G													
			SD-06 Test Reports															
			LED Luminaire - IES LM-79 Test	1.5.4	G													
			Report															
			LED Light Source - IES LM-80	1.5.5	G													
			Test Report															
			Operating test	3.2														
			SD-07 Certificates															
			Luminaire Useful Life Certificate	1.7.1	G													
			SD-08 Manufacturer's Instructions															
			Concrete poles	2.4.1														

SUBMITTAL REGISTER

CONTRACT NO. 1558046

TITLE AND LOCATION: MARINE SOP SCHOOL 120 MAN CLASSROOMS

CONTRACTOR

ACTIVITY NO	TRANSMITTAL NO	SPEC SECT	DESCRIPTION ITEM SUBMITTED	PARAGRAPH #	CLASSIFICATION	GOVT OR A/E REVWR	CONTRACTOR: SCHEDULE DATES			CONTRACTOR ACTION			APPROVING AUTHORITY				MAILED TO CONTR/ DATE RCD FRM APPR AUTH	REMARKS
							SUBMIT	APPROVAL NEEDED BY	MATERIAL NEEDED BY	ACTION CODE	DATE OF ACTION	DATE FWD TO APPR AUTH/ DATE RCD FROM CONTR	DATE FWD TO OTHER REVIEWER	DATE RCD FROM OTH REVIEWER	ACTION CODE	DATE OF ACTION		
(a)	(b)	(c)	(d)	(e)	(f)		(g)	(h)	(i)	(j)	(k)	(l)	(m)	(n)	(o)	(p)	(q)	(r)
		26 56 00	SD-10 Operation and Maintenance															
			Data															
			Operational Service	1.8														
		27 10 00	SD-02 Shop Drawings															
			Telecommunications drawings	1.6.1.1	G													
			Telecommunications Space	1.6.1.2	G													
			Drawings															
			SD-03 Product Data															
			Telecommunications cabling	2.4	G													
			Patch panels	2.5.6	G													
			Telecommunications	2.6	G													
			outlet/connector assemblies															
			Equipment support frame	2.5.2	G													
			Connector blocks	2.5.3	G													
			SD-06 Test Reports															
			Telecommunications cabling	3.5.1	G													
			testing															
			SD-07 Certificates															
			Telecommunications Contractor	1.6.2.1	G													
			Key Personnel	1.6.2.2	G													
			Manufacturer Qualifications	1.6.2.3	G													
			Test plan	1.6.3	G													
			SD-09 Manufacturer's Field															
			Reports															
			Factory reel tests	2.13.1	G													

SUBMITTAL REGISTER

CONTRACT NO. 1558046

TITLE AND LOCATION: MARINE SOP SCHOOL 120 MAN CLASSROOMS

CONTRACTOR:

ACTIVITY NO	TRANSMITTAL NO	SPEC SECT	DESCRIPTION ITEM SUBMITTED	PARAGRAPH #	CLASSIFICATION	GOVT OR A/E REVWR	CONTRACTOR: SCHEDULE DATES			CONTRACTOR ACTION			APPROVING AUTHORITY					
							SUBMIT	APPROVAL NEEDED BY	MATERIAL NEEDED BY	ACTION CODE	DATE OF ACTION	DATE FWD TO APPR AUTH/ DATE RCD FROM CONTR	DATE FWD TO OTHER REVIEWER	DATE RCD FROM OTH REVIEWER	ACTION CODE	DATE OF ACTION	MAILED TO CONTR/ DATE RCD FRM APPR AUTH	REMARKS
(a)	(b)	(c)	(d)	(e)	(f)		(g)	(h)	(i)	(j)	(k)	(l)	(m)	(n)	(o)	(p)	(q)	(r)
		27 10 00	SD-10 Operation and Maintenance															
			Data															
			Telecommunications cabling and	1.10.1	G													
			pathway system															
			SD-11 Closeout Submittals															
			Record Documentation	1.10.2	G													
		28 31 76.00 22	SD-01 Preconstruction Submittals															
			Qualifications for Fire Alarm	1.6.1.1	G													
			System Subcontractor															
			On Staff Fire Alarm System	1.6.1.1.1	G													
			Designer(s)															
			Supervising Fire Alarm	1.6.1.1.2	G													
			Technician															
			Installing Technicians	1.6.1.1.3	G													
			Testing Personnel	1.6.1.1.4	G													
			SD-02 Shop Drawings															
			Wiring Diagrams	3.2.1	G													
			System Layout	1.4.1	G													
			System Operation	2.27	G													
			Notification Appliances	2.17	G													
			Amplifiers	2.6	G													
			As-Built Drawings	3.6.2														
			SD-03 Product Data															
			Technical Data And Computer	1.4.2														
			Software															

SUBMITTAL REGISTER

CONTRACT NO. 1558046

TITLE AND LOCATION: MARINE SOP SCHOOL 120 MAN CLASSROOMS

CONTRACTOR:

ACTIVITY NO	TRANSMITTAL NO	SPEC SECT	DESCRIPTION ITEM SUBMITTED	PARAGRAPH #	CLASSIFICATION	GOVT OR A/E REVWR	CONTRACTOR: SCHEDULE DATES			CONTRACTOR ACTION			APPROVING AUTHORITY					
							SUBMIT	APPROVAL NEEDED BY	MATERIAL NEEDED BY	ACTION CODE	DATE OF ACTION	DATE FWD TO APPR AUTH/ DATE RCD FROM CONTR	DATE FWD TO OTHER REVIEWER	DATE RCD FROM OTH REVIEWER	ACTION CODE	DATE OF ACTION	MAILED TO CONTR/ DATE RCD FRM APPR AUTH	REMARKS
(a)	(b)	(c)	(d)	(e)	(f)		(g)	(h)	(i)	(j)	(k)	(l)	(m)	(n)	(o)	(p)	(q)	(r)
		28 31 76.00 22	SUPPLEMENTARY	2.7														
			NOTIFICATION APPLIANCE															
			CIRCUIT PANEL															
			AUXILIARY POWER SUPPLY	2.8														
			PANEL															
			Amplifiers	2.6														
			Digitalized voice generators	2.6														
			Digitalized voice generators	2.6														
			Batteries	2.12.1														
			Battery chargers	2.12.2														
			Wiring	2.13														
			Surge protection	2.14														
			Ceiling bridges	2.15														
			Back boxes and conduit	2.16														
			Terminal cabinets	3.2.2														
			Notification appliances	2.17														
			Addressable monitor module	2.18														
			Addressable control/relay module	2.19														
			Isolation module	2.20														
			Manual stations	2.21														
			Smoke detectors	2.22														
			Duct mounted smoke detectors	2.22.3														
			Carbon monoxide detector	2.23														
			Waterflow switches	2.24														
			Tamper switches	2.25														

SUBMITTAL REGISTER

CONTRACT NO. 1558046

TITLE AND LOCATION: MARINE SOP SCHOOL 120 MAN CLASSROOMS

CONTRACTOR

ACTIVITY NO	TRANSMITTAL NO	SPEC SECT	DESCRIPTION ITEM SUBMITTED	PARAGRAPH #	CLASSIFICATION	GOVT OR A/E REVWR	CONTRACTOR: SCHEDULE DATES			CONTRACTOR ACTION			APPROVING AUTHORITY				MAILED TO CONTR/	REMARKS
							SUBMIT	APPROVAL NEEDED BY	MATERIAL NEEDED BY	ACTION CODE	DATE OF ACTION	DATE FWD TO APPR AUTH/ DATE RCD FROM CONTR	DATE FWD TO OTHER REVIEWER	DATE RCD FROM OTH REVIEWER	ACTION CODE	DATE OF ACTION	DATE RCD FRM APPR AUTH	
(a)	(b)	(c)	(d)	(e)	(f)		(g)	(h)	(i)	(j)	(k)	(l)	(m)	(n)	(o)	(p)	(q)	(r)
		28 31 76.00 22	ENVIRONMENTAL	2.26														
			ENCLOSURES OR GUARDS															
			Manufacturer's installation and	1.8														
			maintenance manuals															
			SD-05 Design Data															
			System Operation	2.27	G													
			Battery power		G													
			SD-06 Test Reports															
			Field Quality Control	3.6														
			Testing Procedures	3.6.1														
			Smoke detector testing	2.22.4														
			Carbon monoxide detector testing	2.23.1														
			SD-09 Manufacturer’s Field															
			Reports															
			Combination emergency	2.3														
			communications system panel															
			SD-10 Operation and Maintenance															
			Data															
			Operation and Maintenance	1.8														
			(O&M) Instructions															
			Instruction of Government	3.7														
			Employees															
		31 05 19	SD-03 Product Data															
			Thread	2.1.2														
			Manufacturing Quality Control	2.2														
			Sampling and Testing															

SUBMITTAL REGISTER

CONTRACT NO. 1558046

TITLE AND LOCATION: MARINE SOP SCHOOL 120 MAN CLASSROOMS

CONTRACTOR

ACTIVITY NO	TRANSMITTAL NO	SPEC SECT	DESCRIPTION ITEM SUBMITTED	PARAGRAPH #	CLASSIFICATION	GOVT OR A/E REVWR	CONTRACTOR: SCHEDULE DATES			CONTRACTOR ACTION			APPROVING AUTHORITY					
							SUBMIT	APPROVAL NEEDED BY	MATERIAL NEEDED BY	ACTION CODE	DATE OF ACTION	DATE FWD TO APPR AUTH/ DATE RCD FROM CONTR	DATE FWD TO OTHER REVIEWER	DATE RCD FROM OTH REVIEWER	ACTION CODE	DATE OF ACTION	MAILED TO CONTR/ DATE RCD FRM APPR AUTH	REMARKS
(a)	(b)	(c)	(d)	(e)	(f)		(g)	(h)	(i)	(j)	(k)	(l)	(m)	(n)	(o)	(p)	(q)	(r)
		31 05 19	SD-04 Samples															
			Quality Assurance Samples and	3.1														
			Tests															
			SD-07 Certificates															
			Geotextile	2.1.1														
		31 23 00.00 20	SD-01 Preconstruction Submittals															
			Shoring and Sheeting Plan	1.7.1														
			Dewatering work plan	1.7.2														
			SD-06 Test Reports															
			Borrow Site Testing	1.6	G													
			Fill and backfill	3.13.2.1														
			Select material	3.13.2.2														
			Porous fill	3.13.2.3														
			Density tests	3.13.2.4														
		31 31 16.13	SD-01 Preconstruction Submittals															
			Termiticide Application Plan	3.1.5	G													
			SD-03 Product Data															
			Termiticides	2.2.1														
			SD-05 Design Data															
			Mixing Formulation	3.2.2														
			SD-06 Test Reports															
			Soil Moisture	1.6.1														
			Calibration Test	3.2.1														
			SD-07 Certificates															
			Qualifications	1.4.2	G													
			Foundation Exterior	3.1.2														

SUBMITTAL REGISTER

CONTRACT NO. 1558046

TITLE AND LOCATION: MARINE SOP SCHOOL 120 MAN CLASSROOMS

CONTRACTOR

ACTIVITY NO	TRANSMITTAL NO	SPEC SECT	DESCRIPTION ITEM SUBMITTED	PARAGRAPH #	CLASSIFICATION	GOVT OR A/E REVWR	CONTRACTOR: SCHEDULE DATES			CONTRACTOR ACTION			APPROVING AUTHORITY					
							SUBMIT	APPROVAL NEEDED BY	MATERIAL NEEDED BY	ACTION CODE	DATE OF ACTION	DATE FWD TO APPR AUTH/ DATE RCD FROM CONTR	DATE FWD TO OTHER REVIEWER	DATE RCD FROM OTH REVIEWER	ACTION CODE	DATE OF ACTION	MAILED TO CONTR/ DATE RCD FRM APPR AUTH	REMARKS
(a)	(b)	(c)	(d)	(e)	(f)		(g)	(h)	(i)	(j)	(k)	(l)	(m)	(n)	(o)	(p)	(q)	(r)
		31 31 16.13	Utilities and Vents	3.1.3														
			Crawl and Plenum Air Spaces	3.1.4														
			List of Equipment	3.2.1														
			SD-08 Manufacturer's Instructions															
			Termiticides	2.2.1														
			SD-11 Closeout Submittals															
			Verification of Measurement	3.3.1														
			Warranty	1.7														
			Pest Management Report	3.4														
		31 31 16.19	SD-02 Shop Drawings															
			Steel Mesh Shop Drawings	3.3.1	G													
			Basaltic Sand Shop Drawings	3.3	G													
			SD-03 Product Data															
			Steel Mesh Materials	2.2.2														
			Steel Mesh Materials	2.2.2.1														
			Accessories	2.2.3														
			Steel Mesh System	2.1.1														
			Written Warranty	1.7														
			SD-04 Samples															
			Steel Mesh Materials	2.2.2	G													
			Steel Mesh Materials	2.2.2.1	G													
			SD-06 Test Reports															
			Basaltic Sand	2.2.4	G													
			SD-07 Certificates															
			System Installers	1.4.1														
			Steel Mesh Materials	2.2.2														

SUBMITTAL REGISTER

CONTRACT NO. 1558046

TITLE AND LOCATION: MARINE SOP SCHOOL 120 MAN CLASSROOMS

CONTRACTOR:

ACTIVITY NO	TRANSMITTAL NO	SPEC SECT	DESCRIPTION ITEM SUBMITTED	PARAGRAPH #	CLASSIFICATION	GOVT OR A/E REVWR	CONTRACTOR: SCHEDULE DATES			CONTRACTOR ACTION			APPROVING AUTHORITY					
							SUBMIT	APPROVAL NEEDED BY	MATERIAL NEEDED BY	ACTION CODE	DATE OF ACTION	DATE FWD TO APPR AUTH/ DATE RCD FROM CONTR	DATE FWD TO OTHER REVIEWER	DATE RCD FROM OTH REVIEWER	ACTION CODE	DATE OF ACTION	MAILED TO CONTR/ DATE RCD FRM APPR AUTH	REMARKS
(a)	(b)	(c)	(d)	(e)	(f)		(g)	(h)	(i)	(j)	(k)	(l)	(m)	(n)	(o)	(p)	(q)	(r)
		31 31 16.19	Steel Mesh Materials	2.2.2.1														
			Written Verification	3.1														
			SD-08 Manufacturer’s Instructions															
			Manufacturer's Installation	3.3.1														
			Instruction Manual															
			Manufacturer's Guidance	3.4.1														
			Manufacturer's Installation	3.3														
			Instructions															
			SD-09 Manufacturer’s Field															
			Reports															
			Site Conditions	3.4.2														
			SD-11 Closeout Submittals															
			Written Warranty	1.7														
		32 05 33	SD-01 Preconstruction Submittals															
			Integrated Pest Management	2.4	G													
			Plan															
			SD-03 Product Data															
			Fertilizer	2.1	G													
			Mulches Topdressing	2.3														
			Organic Mulch Materials	2.3.2														
			SD-07 Certificates															
			Maintenance Inspection Report	3.4.1														
			Plant Quantities		G													
			SD-10 Operation and Maintenance															
			Data															
			Maintenance	1.6														

SUBMITTAL REGISTER

CONTRACT NO. 1558046

TITLE AND LOCATION: MARINE SOP SCHOOL 120 MAN CLASSROOMS

CONTRACTOR

ACTIVITY NO	TRANSMITTAL NO	SPEC SECT	DESCRIPTION ITEM SUBMITTED	PARAGRAPH #	CLASSIFICATION	GOVT OR A/E REVWR	CONTRACTOR: SCHEDULE DATES			CONTRACTOR ACTION			APPROVING AUTHORITY					
							SUBMIT	APPROVAL NEEDED BY	MATERIAL NEEDED BY	ACTION CODE	DATE OF ACTION	DATE FWD TO APPR AUTH/ DATE RCD FROM CONTR	DATE FWD TO OTHER REVIEWER	DATE RCD FROM OTH REVIEWER	ACTION CODE	DATE OF ACTION	MAILED TO CONTR/ DATE RCD FRM APPR AUTH	REMARKS
(a)	(b)	(c)	(d)	(e)	(f)		(g)	(h)	(i)	(j)	(k)	(l)	(m)	(n)	(o)	(p)	(q)	(r)
		32 05 33	SD-11 Closeout Submittals															
			Tree Staking and Guying	3.4.2														
			Removal															
		32 10 00	SD-03 Product Data															
			Precast car stops	2.10														
			Aggregate	2.11.2														
			Local/Regional Materials	1.5.1														
			Albedo	2.1.1														
			SD-04 Samples															
			Uncompacted mix	3.3.2.1														
			cores	3.3														
			SD-06 Test Reports															
			Trial batch	1.3.4														
			Mix design	1.3.5														
			Asphalt concrete	2.1														
			Density	3.3.2.2														
			Density	3.3.2.3														
			Thickness	3.3.2.2														
			Thickness	3.3.2.3														
			Straightedge test	3.3.2.2														
			SD-07 Certificates															
			mix delivery record	1.3.3														
			Asphalt concrete	2.1														
			Asphalt concrete	2.1														
			Curbs	2.6														
			Guard (Guide) rails	2.7														

SUBMITTAL REGISTER

CONTRACT NO. 1558046

TITLE AND LOCATION: MARINE SOP SCHOOL 120 MAN CLASSROOMS

CONTRACTOR

ACTIVITY NO	TRANSMITTAL NO	SPEC SECT	DESCRIPTION ITEM SUBMITTED	PARAGRAPH #	CLASSIFICATION	GOVT OR A/E REVWR	CONTRACTOR: SCHEDULE DATES			CONTRACTOR ACTION			APPROVING AUTHORITY					
							SUBMIT	APPROVAL NEEDED BY	MATERIAL NEEDED BY	ACTION CODE	DATE OF ACTION	DATE FWD TO APPR AUTH/ DATE RCD FROM CONTR	DATE FWD TO OTHER REVIEWER	DATE RCD FROM OTH REVIEWER	ACTION CODE	DATE OF ACTION	MAILED TO CONTR/ DATE RCD FRM APPR AUTH	REMARKS
(a)	(b)	(c)	(d)	(e)	(f)		(g)	(h)	(i)	(j)	(k)	(l)	(m)	(n)	(o)	(p)	(q)	(r)
		32 10 00	Median barriers	2.8														
			Traffic signs	2.9														
		32 13 13.06	SD-03 Product Data															
			Curing Materials	2.1.6	G													
			Admixtures	2.1.4	G													
			Dowel	2.1.5.1	G													
			Reinforcement	2.1.5.4	G													
			Cementitious Materials	2.1.1	G													
			Aggregate	2.1.3	G													
			Albedo	2.2.2														
			SD-04 Samples															
			Field-Constructed Mockup	1.6.5														
			SD-05 Design Data															
			Mix Design	2.3	G													
			SD-06 Test Reports															
			Aggregate	2.1.3	G													
			Concrete Slump Tests	3.7.2	G													
			Air Content Tests	3.7.4	G													
			Flexural Strength Tests	3.7.3	G													
			Cementitious Materials	2.1.1	G													
			SD-07 Certificates															
			Ready-mixed Concrete Plant	1.6.1	G													
			Batch Tickets	1.6.4	G													
			Cementitious Materials	2.1.1	G													
		32 16 19	SD-03 Product Data															
			Concrete	2.1														

SUBMITTAL REGISTER

CONTRACT NO. 1558046

TITLE AND LOCATION: MARINE SOP SCHOOL 120 MAN CLASSROOMS

CONTRACTOR

ACTIVITY NO	TRANSMITTAL NO	SPEC SECT	DESCRIPTION ITEM SUBMITTED	PARAGRAPH #	CLASSIFICATION	GOVT OR A/E REVWR	CONTRACTOR: SCHEDULE DATES			CONTRACTOR ACTION			APPROVING AUTHORITY					
							SUBMIT	APPROVAL NEEDED BY	MATERIAL NEEDED BY	ACTION CODE	DATE OF ACTION	DATE FWD TO APPR AUTH/ DATE RCD FROM CONTR	DATE FWD TO OTHER REVIEWER	DATE RCD FROM OTH REVIEWER	ACTION CODE	DATE OF ACTION	MAILED TO CONTR/ DATE RCD FRM APPR AUTH	REMARKS
(a)	(b)	(c)	(d)	(e)	(f)		(g)	(h)	(i)	(j)	(k)	(l)	(m)	(n)	(o)	(p)	(q)	(r)
		32 16 19	SD-06 Test Reports															
			Field Quality Control	3.8														
		32 17 23	SD-03 Product Data															
			Surface Preparation Equipment	2.1.1.2	G													
			List															
			Application Equipment List	2.1.2	G													
			Exterior Surface Preparation	3.2														
			Safety Data Sheets	1.4.1	G													
			Reflective media for airfields		G													
			Reflective media for roads	2.2.8.1	G													
			Waterborne Paint	2.2.1	G													
			Solventborne Paint	2.2.2	G													
			Thermoplastic compound	2.2.5	G													
			Thermoplastic compound	3.3.2	G													
			Raised Pavement Markers		G													
			Primers and Adhesives															
			SD-06 Test Reports															
			Reflective Media for Airfields		G													
			Reflective Media for Roads	2.2.8.1	G													
			Waterborne Paint	2.2.1	G													
			Solventborne Paint	2.2.2	G													
			High Build Acrylic Coating	2.2.6	G													
			(HBAC)															
			Thermoplastic Compound	2.2.5	G													
			Thermoplastic Compound	3.3.2	G													

SUBMITTAL REGISTER

CONTRACT NO. 1558046

TITLE AND LOCATION: MARINE SOP SCHOOL 120 MAN CLASSROOMS

CONTRACTOR:

ACTIVITY NO	TRANSMITTAL NO	SPEC SECT	DESCRIPTION ITEM SUBMITTED	PARAGRAPH #	CLASSIFICATION	GOVT OR A/E REVWR	CONTRACTOR: SCHEDULE DATES			CONTRACTOR ACTION			APPROVING AUTHORITY					
							SUBMIT	APPROVAL NEEDED BY	MATERIAL NEEDED BY	ACTION CODE	DATE OF ACTION	DATE FWD TO APPR AUTH/ DATE RCD FROM CONTR	DATE FWD TO OTHER REVIEWER	DATE RCD FROM OTH REVIEWER	ACTION CODE	DATE OF ACTION	MAILED TO CONTR/ DATE RCD FRM APPR AUTH	REMARKS
(a)	(b)	(c)	(d)	(e)	(f)		(g)	(h)	(i)	(j)	(k)	(l)	(m)	(n)	(o)	(p)	(q)	(r)
		32 17 23	Raised Pavement Markers		G													
			Primers and Adhesives															
			Test Reports															
			SD-07 Certificates															
			Qualifications	1.4.2	G													
			Reflective Media for Airfields															
			Reflective Media for Roads	2.2.8.1														
			Waterborne Paint	2.2.1														
			Solventborne Paint	2.2.2														
			Volatile Organic Compound	1.4.1	G													
			Volatile Organic Compound	2.2.6	G													
			Thermoplastic Compound	2.2.5														
			Thermoplastic Compound	3.3.2														
			SD-08 Manufacturer's Instructions															
			Waterborne Paint	2.2.1	G													
			Solventborne Paint	2.2.2	G													
			Thermoplastic Compound	2.2.5	G													
			Thermoplastic Compound	3.3.2	G													
		32 31 13.53	SD-02 Shop Drawings															
			Fence Installation	1.3.2														
			Fence Installation	3.1														
			Installation Drawings	1.3.2														
			Location of gate, corner, end, and	1.3.2														
			pull posts															
			Gate Assembly	1.3.2														
			Gate Assembly	2.7.1														

SUBMITTAL REGISTER

CONTRACT NO. 1558046

TITLE AND LOCATION: MARINE SOP SCHOOL 120 MAN CLASSROOMS

CONTRACTOR:

ACTIVITY NO	TRANSMITTAL NO	SPEC SECT	DESCRIPTION ITEM SUBMITTED	PARAG # RAPH	CLASSIFICATION	GOVT OR A/E REVWR	CONTRACTOR: SCHEDULE DATES			CONTRACTOR ACTION			APPROVING AUTHORITY					
							SUBMIT	APPROVAL NEEDED BY	MATERIAL NEEDED BY	ACTION CODE	DATE OF ACTION	DATE FWD TO APPR AUTH/ DATE RCD FROM CONTR	DATE FWD TO OTHER REVIEWER	DATE RCD FROM OTH REVIEWER	ACTION CODE	DATE OF ACTION	MAILED TO CONTR/ DATE RCD FRM APPR AUTH	REMARKS
(a)	(b)	(c)	(d)	(e)	(f)		(g)	(h)	(i)	(j)	(k)	(l)	(m)	(n)	(o)	(p)	(q)	(r)
		32 31 13.53	Gate Assembly	2.7.1														
			Turnstiles	1.3.2														
			Turnstiles	2.8														
			Gate Hardware and Accessories	1.3.2														
			Gate Hardware and Accessories	2.7.3														
			SD-03 Product Data															
			Fence Installation	1.3.2														
			Fence Installation	3.1														
			Gate Assembly	1.3.2														
			Gate Assembly	2.7.1														
			Gate Assembly	2.7.1														
			Gate Hardware and Accessories	1.3.2														
			Gate Hardware and Accessories	2.7.3														
			SD-04 Samples															
			Fabric	2.1.1														
			Posts	2.2														
			Post Caps	2.2.2														
			Braces	2.3														
			Top Rail	2.3														
			Tension Wire	2.2.2														
			Barbed Wire	2.4.2														
			Barbed Wire Supporting Arms	2.2.2														
			Barbed Tape	2.5														
			Stretcher Bars	2.1.1														
			Gate Posts	2.1.1														
			Gate Hardware and Accessories	1.3.2														

SUBMITTAL REGISTER

CONTRACT NO. 1558046

TITLE AND LOCATION: MARINE SOP SCHOOL 120 MAN CLASSROOMS

CONTRACTOR:

ACTIVITY NO	TRANSMITTAL NO	SPEC SECT	DESCRIPTION ITEM SUBMITTED	PARAGRAPH #	CLASSIFICATION	GOVT OR A/E REVWR	CONTRACTOR: SCHEDULE DATES			CONTRACTOR ACTION			APPROVING AUTHORITY					
							SUBMIT	APPROVAL NEEDED BY	MATERIAL NEEDED BY	ACTION CODE	DATE OF ACTION	DATE FWD TO APPR AUTH/ DATE RCD FROM CONTR	DATE FWD TO OTHER REVIEWER	DATE RCD FROM OTH REVIEWER	ACTION CODE	DATE OF ACTION	MAILED TO CONTR/ DATE RCD FRM APPR AUTH	REMARKS
(a)	(b)	(c)	(d)	(e)	(f)		(g)	(h)	(i)	(j)	(k)	(l)	(m)	(n)	(o)	(p)	(q)	(r)
		32 31 13.53	Gate Hardware and Accessories	2.7.3														
			Turnstiles	1.3.2														
			Turnstiles	2.8														
			Padlocks	2.9														
			Wire Ties	2.4.1														
			SD-06 Test Reports															
			zinc coating	1.3.1														
			PVC coating	1.3.1														
			Aluminum Alloy Coating	1.3.1														
			SD-07 Certificates															
			Chain Link Fence	2.2.1														
			Reports	1.3.1														
			Reports	1.3.1														
			Zinc Coating	1.3.1														
			PVC coating	1.3.1														
			aluminum alloy coating	1.3.1														
			Fabric	2.1.1														
			Barbed Wire	2.4.2														
			Stretcher Bars	2.1.1														
			Gate Hardware and Accessories	1.3.2														
			Gate Hardware and Accessories	2.7.3														
			Concrete	2.6														
			Gate Operator	2.10														
			SD-08 Manufacturer's Instructions															
			Fence Installation	1.3.2														
			Fence Installation	3.1														

SUBMITTAL REGISTER

CONTRACT NO. 1558046

TITLE AND LOCATION: MARINE SOP SCHOOL 120 MAN CLASSROOMS

CONTRACTOR

ACTIVITY NO	TRANSMITTAL NO	SPEC SECT	DESCRIPTION ITEM SUBMITTED	PARAG # RAPH	CLASSIFICATION	GOVT OR A/E REVWR	CONTRACTOR: SCHEDULE DATES			CONTRACTOR ACTION			APPROVING AUTHORITY					
							SUBMIT	APPROVAL NEEDED BY	MATERIAL NEEDED BY	ACTION CODE	DATE OF ACTION	DATE FWD TO APPR AUTH/ DATE RCD FROM CONTR	DATE FWD TO OTHER REVIEWER	DATE RCD FROM OTH REVIEWER	ACTION CODE	DATE OF ACTION	MAILED TO CONTR/ DATE RCD FRM APPR AUTH	REMARKS
(a)	(b)	(c)	(d)	(e)	(f)		(g)	(h)	(i)	(j)	(k)	(l)	(m)	(n)	(o)	(p)	(q)	(r)
		32 31 13.53	Gate Assembly	1.3.2														
			Gate Assembly	2.7.1														
			Gate Assembly	2.7.1														
			Hardware Assembly	3.6														
			Accessories	1.3.1														
			SD-10 Operation and Maintenance															
			Data															
			Electro-Mechanical Locks	2.11														
			Gate Operator	2.10														
			operating and maintenance	3.6														
			instructions															
		32 92 23	SD-03 Product Data															
			Fertilizer	2.4														
			SD-06 Test Reports															
			Topsoil composition tests	2.2.3														
			SD-07 Certificates															
			sods	2.1														
		32 93 00	SD-01 Preconstruction Submittals															
			State Landscape Contractor's	1.4.3														
			License															
			Time Restrictions and Planting	1.6														
			Conditions															
			SD-03 Product Data															
			Organic Mulch Materials	2.7.2														
			Drainage Pipe															
			Hardwood Mulch		G													

SUBMITTAL REGISTER

CONTRACT NO. 1558046

TITLE AND LOCATION: MARINE SOP SCHOOL 120 MAN CLASSROOMS

CONTRACTOR:

ACTIVITY NO	TRANSMITTAL NO	SPEC SECT	DESCRIPTION ITEM SUBMITTED	PARAGRAPH #	CLASSIFICATION	GOVT OR A/E REVWR	CONTRACTOR: SCHEDULE DATES			CONTRACTOR ACTION			APPROVING AUTHORITY					
							SUBMIT	APPROVAL NEEDED BY	MATERIAL NEEDED BY	ACTION CODE	DATE OF ACTION	DATE FWD TO APPR AUTH/ DATE RCD FROM CONTR	DATE FWD TO OTHER REVIEWER	DATE RCD FROM OTH REVIEWER	ACTION CODE	DATE OF ACTION	MAILED TO CONTR/ DATE RCD FRM APPR AUTH	REMARKS
(a)	(b)	(c)	(d)	(e)	(f)		(g)	(h)	(i)	(j)	(k)	(l)	(m)	(n)	(o)	(p)	(q)	(r)
		32 93 00	Ground Stakes															
			Metal Edging															
			Fertilizer	2.5														
			Weed Control Fabric	2.6	G													
			Staking Material	2.8.1														
			Metal Anchors	2.8.6														
			Watering Bags															
			Antidesiccants	2.9														
			SD-06 Test Reports															
			Topsoil Composition Tests	2.2.3														
			Percolation Test	1.4.5														
			SD-07 Certificates															
			Nursery Certifications	2.1.1														
			SD-10 Operation and Maintenance															
			Data															
			Plastic Identification	1.8														
		33 11 00	SD-01 Preconstruction Submittals															
			Connections	3.1.1	G													
			SD-03 Product Data															
			Pipe, Fittings, Joints and	2.1.1	G													
			Couplings															
			Ball And Socket Joint		G													
			Valves	2.1.2	G													
			Valve Boxes	2.1.2.8	G													
			Fire Hydrants	2.1.4.1	G													
			Pipe Restraint	2.2.1	G													

SUBMITTAL REGISTER

CONTRACT NO. 1558046

TITLE AND LOCATION: MARINE SOP SCHOOL 120 MAN CLASSROOMS

CONTRACTOR:

ACTIVITY NO	TRANSMITTAL NO	SPEC SECT	DESCRIPTION ITEM SUBMITTED	PARAGRAPH #	CLASSIFICATION	GOVT OR A/E REVWR	CONTRACTOR: SCHEDULE DATES			CONTRACTOR ACTION			APPROVING AUTHORITY					
							SUBMIT	APPROVAL NEEDED BY	MATERIAL NEEDED BY	ACTION CODE	DATE OF ACTION	DATE FWD TO APPR AUTH/ DATE RCD FROM CONTR	DATE FWD TO OTHER REVIEWER	DATE RCD FROM OTH REVIEWER	ACTION CODE	DATE OF ACTION	MAILED TO CONTR/ DATE RCD FRM APPR AUTH	REMARKS
(a)	(b)	(c)	(d)	(e)	(f)		(g)	(h)	(i)	(j)	(k)	(l)	(m)	(n)	(o)	(p)	(q)	(r)
		33 11 00	Tapping Sleeves	2.2.2	G													
			Corporation Stops	2.2.7.1	G													
			Backflow Preventer	1.4.2.1.1	G													
			Railroad Crossing Casing Pipe		G													
			Precast Concrete Thrust Blocks	2.2.1.2	G													
			Disinfection Procedures	3.2.4	G													
			SD-06 Test Reports															
			Backflow Preventer Tests	3.3.1.5	G													
			Bacteriological Samples	3.3.1.4	G													
			Post-Construction Fusion Report	3.2.1.7.1	G													
			Hydrostatic Sewer Test	3.2.1.1.6														
			Leakage Test	3.3.1.3														
			Hydrostatic Test	3.3.1.1														
			SD-07 Certificates															
			Pipe, Fittings, Joints and	2.1.1														
			Couplings															
			Lining	2.1.1.1.1														
			Lining for Fittings	2.1.1.2.1.2														
			Valves	2.1.2														
			Fire Hydrants	2.1.4.1														
			Backflow Prevention Training	1.4.2.1.1.2														
			Certificate															
			Backflow Tester	1.4.2.1.1.1														
			Fusion Technician Qualifications	1.4.2.2	G													
			Turbine Type Meters															
			Propeller Type Meters															

SUBMITTAL REGISTER

CONTRACT NO. 1558046

TITLE AND LOCATION: MARINE SOP SCHOOL 120 MAN CLASSROOMS

CONTRACTOR:

ACTIVITY NO	TRANSMITTAL NO	SPEC SECT	DESCRIPTION ITEM SUBMITTED	PARAGRAPH #	CLASSIFICATION	GOVT OR A/E REVWR	CONTRACTOR: SCHEDULE DATES			CONTRACTOR ACTION			APPROVING AUTHORITY				MAILED TO CONTR/ DATE RCD FRM APPR AUTH	REMARKS
							SUBMIT	APPROVAL NEEDED BY	MATERIAL NEEDED BY	ACTION CODE	DATE OF ACTION	DATE FWD TO APPR AUTH/ DATE RCD FROM CONTR	DATE FWD TO OTHER REVIEWER	DATE RCD FROM OTH REVIEWER	ACTION CODE	DATE OF ACTION		
(a)	(b)	(c)	(d)	(e)	(f)		(g)	(h)	(i)	(j)	(k)	(l)	(m)	(n)	(o)	(p)	(q)	(r)
		33 11 00	Displacement Type Meters															
			Compound Type Meters															
			Fire Service Type Meters															
			Backflow Certificate	2.1.6														
			SD-08 Manufacturer’s Instructions															
			Ductile Iron Piping	2.1.1.1														
			PVC Piping	2.1.1.2.1.1														
			PVCO Piping															
			Polyethylene (PE) Pipe	2.1.1.2.3														
			PVC Piping For Service Lines	2.1.1.2.2														
			Copper Pipe For Service Lines	2.1.1.3														
		33 11 23	SD-03 Product Data															
			Valve Box	2.7														
			Pressure Regulator	2.4.3														
			Gas Equipment Connectors	2.6														
			Valves	2.4														
			Warning and Identification Tape	2.9														
			Risers	2.2.3														
			Transition Fittings	2.2.4														
			Gas meter	2.5														
			LPG Containers and Accessories	2.16														
			SD-07 Certificates															
			Welder's Qualifications	1.4.1														
			PE Welder's Qualifications	1.4.2														
			Welder's Identification Symbols	1.4.1														
			SD-08 Manufacturer’s Instructions															

SUBMITTAL REGISTER

CONTRACT NO. 1558046

TITLE AND LOCATION: MARINE SOP SCHOOL 120 MAN CLASSROOMS

CONTRACTOR:

ACTIVITY NO	TRANSMITTAL NO	SPEC SECT	DESCRIPTION ITEM SUBMITTED	PARAGRAPH #	CLASSIFICATION	GOVT OR A/E REVWR	CONTRACTOR: SCHEDULE DATES			CONTRACTOR ACTION			APPROVING AUTHORITY				MAILED TO CONTR/	REMARKS
							SUBMIT	APPROVAL NEEDED BY	MATERIAL NEEDED BY	ACTION CODE	DATE OF ACTION	DATE FWD TO APPR AUTH/ DATE RCD FROM CONTR	DATE FWD TO OTHER REVIEWER	DATE RCD FROM OTH REVIEWER	ACTION CODE	DATE OF ACTION	DATE RCD FRM APPR AUTH	
(a)	(b)	(c)	(d)	(e)	(f)		(g)	(h)	(i)	(j)	(k)	(l)	(m)	(n)	(o)	(p)	(q)	(r)
		33 11 23	PE Pipe and Fittings	2.2.2														
		33 30 00	SD-01 Preconstruction Submittals															
			Contractor's License	1.3.1	G													
			SD-02 Shop Drawings															
			Installation Drawings	3.1.1	G													
			SD-03 Product Data															
			Precast Concrete Manholes	2.2.7														
			Frames, Covers, and Gratings	2.2.11														
			Gravity Pipe	2.2.1														
			Pressure Pipe	2.2.2														
			Precast Concrete Septic Tanks		G													
			SD-06 Test Reports															
			Precast Concrete Sewer Manhole	3.3.1.1.2.(	G													
			Test															
			Hydrostatic Sewer Test		G													
			Infiltration Tests And Exfiltration	3.3.1.1.1	G													
			Tests															
			Negative Air Pressure Test	3.3.1.1.2	G													
			Low-Pressure Air Tests	3.3.1.1.3	G													
			Tests For Pressure Lines		G													
			Concrete Pipe Test	3.3.1.1.2.(	G													
			SD-07 Certificates															
			Portland Cement	2.2.5														
			Gaskets															
			Pre-Installation Inspection	3.3.3.1	G													
			Request															

SUBMITTAL REGISTER

CONTRACT NO. 1558046

TITLE AND LOCATION: MARINE SOP SCHOOL 120 MAN CLASSROOMS

CONTRACTOR

ACTIVITY NO	TRANSMITTAL NO	SPEC SECT	DESCRIPTION ITEM SUBMITTED	PARAGRAPH #	CLASSIFICATION	GOVT OR A/E REVWR	CONTRACTOR: SCHEDULE DATES			CONTRACTOR ACTION			APPROVING AUTHORITY				MAILED TO CONTR/	
							SUBMIT	APPROVAL NEEDED BY	MATERIAL NEEDED BY	ACTION CODE	DATE OF ACTION	DATE FWD TO APPR AUTH/ DATE RCD FROM CONTR	DATE FWD TO OTHER REVIEWER	DATE RCD FROM OTH REVIEWER	ACTION CODE	DATE OF ACTION	DATE RCD FRM APPR AUTH	REMARKS
(a)	(b)	(c)	(d)	(e)	(f)		(g)	(h)	(i)	(j)	(k)	(l)	(m)	(n)	(o)	(p)	(q)	(r)
		33 30 00	Post-Installation Inspection	3.3.3.2	G													
		33 40 00	SD-04 Samples															
			Pipe for Culverts and Storm	2.1														
			Drains															
			SD-07 Certificates															
			Resin Certification															
			Oil Resistant Gasket	2.4.8.1														
			Leakage Test	3.9.1.2														
			Hydrostatic Test on Watertight	3.9.1.1														
			Joints															
			Determination of Density	3.9.1.3														
			Frame and Cover for Gratings	2.4.7														
			Post-Installation Inspection	3.9.2.1.3														
			Report															
			Placing Pipe	3.3														
			SD-11 Closeout Submittals															
			Lid Verification Report	3.9.2.2	G													
		33 82 00	SD-02 Shop Drawings															
			Telecommunications Outside	1.6.1.1	G													
			Plant															
			Telecommunications Entrance	1.6.1.2	G													
			Facility Drawings															
			SD-03 Product Data															
			Wire and cable	2.8	G													
			Cable splices, and connectors	2.5	G													
			Closures	2.3	G													

SUBMITTAL REGISTER

CONTRACT NO. 1558046

TITLE AND LOCATION: MARINE SOP SCHOOL 120 MAN CLASSROOMS

CONTRACTOR

ACTIVITY NO	TRANSMITTAL NO	SPEC SECT	DESCRIPTION ITEM SUBMITTED	PARAGRAPH #	CLASSIFICATION	GOVT OR A/E REVWR	CONTRACTOR: SCHEDULE DATES			CONTRACTOR ACTION			APPROVING AUTHORITY					
							SUBMIT	APPROVAL NEEDED BY	MATERIAL NEEDED BY	ACTION CODE	DATE OF ACTION	DATE FWD TO APPR AUTH/ DATE RCD FROM CONTR	DATE FWD TO OTHER REVIEWER	DATE RCD FROM OTH REVIEWER	ACTION CODE	DATE OF ACTION	MAILED TO CONTR/ DATE RCD FRM APPR AUTH	REMARKS
(a)	(b)	(c)	(d)	(e)	(f)		(g)	(h)	(i)	(j)	(k)	(l)	(m)	(n)	(o)	(p)	(q)	(r)
		33 82 00	Building protector assemblies	2.2.1	G													
			Protector modules	2.2.2	G													
			Cross-connect terminal cabinets	2.4	G													
			Spare Parts	1.8.2	G													
			SD-06 Test Reports															
			Pre-installation tests	3.4.1	G													
			Acceptance tests	3.4.2	G													
			Outside Plant Test Plan	1.6.3	G													
			SD-07 Certificates															
			Telecommunications Contractor	1.6.2.1	G													
			Key Personnel	1.6.2.2	G													
			Manufacturer's Qualifications	1.6.2.3	G													
			SD-08 Manufacturer’s Instructions															
			Building protector assembly	2.2.1	G													
			installation															
			Cable tensions	3.1.8.1	G													
			Fiber Optic Splices	3.1.10.2	G													
			SD-09 Manufacturer’s Field															
			Reports															
			Factory Reel Test Data	2.16.1	G													
			SD-10 Operation and Maintenance															
			Data															
			Telecommunications outside	1.6.1.1	G													
			plant (OSP)															
			SD-11 Closeout Submittals															
			Record Documentation	1.8.1	G													

THIS PAGE HAS BEEN INTENTIONALLY LEFT BLANK

SECTION 01 33 29

SUSTAINABILITY REPORTING
02/15

PART 1 GENERAL

1.1 REFERENCES

The publications listed below form a part of this specification to the extent referenced. The publications are referred to within the text by the basic designation only.

AMERICAN SOCIETY OF HEATING, REFRIGERATING AND AIR-CONDITIONING ENGINEERS (ASHRAE)

ASHRAE 189.1	(2011) Standard for the Design of High-Performance Green Buildings Except Low-Rise Residential Buildings

SHEET METAL AND AIR CONDITIONING CONTRACTORS' NATIONAL ASSOCIATION (SMACNA)

ANSI/SMACNA 008	(2007) IAQ Guidelines for Occupied Buildings Under Construction, 2nd Edition

U.S. DEPARTMENT OF ENERGY (DOE)

ISWG Guiding Principles	(2008) High Performance and Sustainable Buildings Guidance

U.S. NATIONAL ARCHIVES AND RECORDS ADMINISTRATION (NARA)

40 CFR 247	Comprehensive Procurement Guideline for Products Containing Recovered Materials

1.2 SUMMARY

This specification includes general requirements and procedures for this project to be constructed and documented per the federally mandated "Guiding Principles" (GP), Third Party Certification (TPC) requirements (if applicable), UFC 1-200-02, High Performance and Sustainable Building Requirements, and other requirements identified in this specification.

1.3 SUBMITTALS

Government approval is required for submittals with a "G" designation; submittals not having a "G" designation are for Contractor QC approval. Submit the following in accordance with Section 01 33 00 SUBMITTAL PROCEDURES:

SD-01 Preconstruction Submittals

Preliminary Sustainability Notebook; G

Preliminary High Performance and Sustainable Building Checklist

SD-11 Closeout Submittals

Final Sustainability Notebook; G

Final High Performance and Sustainable Building Checklist; G

Amended Final Sustainability Notebook; G

1.4 GUIDING PRINCIPLES VALIDATION (GPV)

Provide construction related sustainability documentation to verify achievement of ISWG Guiding Principles Validation (GPV). Provide the following for GPV:

a. Refer to Attachment 1, HPSB Checklist at the end of this specification section.

b. Obtain approval of any changes to the HPSB Checklist from the Contracting Officer at the Preconstruction Conference. Contracting Officer's approval establishes identified ISWG Guiding Principles Requirements as the project's sustainability goals.

   No variations or substitutions to the HPSB Checklist are allowed without written consent from the Contracting Officer. Immediately bring to the attention of the Contracting Officer any changes that impact meeting the approved ISWG Guiding Principles Requirements for this project and demonstrate that change will not incur additional construction cost or increase the life cycle cost.

c. Include all work required to incorporate the applicable ISWG Guiding Principles Requirements indicated on the HPSB Checklist and in this contract.

d. Include construction related documentation to maintain an up-to-date Sustainability Notebook. Supplement construction related documentation containing the following components;

   (1) HPSB Checklist

   (2) Sustainability Action Plan

   (3) Documentation illustrating Guiding Principle (GP) Requirements compliance (4) Commissioning Plan and Reports

1.4.1 Sustainability Action Plan

Include the following information in the Sustainability Action Plan:

a. Contractor's planned method to achieve each construction related GP requirement.

b. For each designated construction related ISWG Guiding Principles Requirements that is not achieved, provide narrative explaining how mission or activity precludes achieving specific sustainability requirement or goal. Provide analysis of particular requirement and level to which project is able to comply.

c. Name and contact information for: Contractor's POC responsible for

ensuring sustainability goals are accomplished and documentation is assembled.

1.4.2 Costs

Contractor is responsible for all costs associated with constructing and demonstrating that project complies with approved ISWG Guiding Principles Requirements.

1.4.3 Calculations

Provide calculations, product data, and certifications required in this section to demonstrate compliance with the ISWG Guiding Principles Requirements.

1.5 SUSTAINABILITY SUBMITTALS

Provide HPSB Checklist and other documentation in the Sustainability Notebook to indicate compliance with the sustainability requirements of the project.

1.5.1 High Performance Sustainable Building (HPSB) Checklist

Provide construction documentation that provides proof of and supports compliance with the completed HBSP Checklist.

1.5.1.1 HPSB Checklist Submittals

Submit updated HPSB Checklist with each Sustainability Notebook submittal. Attach final HPSB Checklist to DD1354 Real Property Record Submittal.

1.5.1.2 HPSB Checklist Public Access

Where not included as attachment to this specification section, use the following as HPSB Checklist for respective service branch. Where Internet address appears on two lines, copy full address into Internet browser.

a. Air Force - Air Force MILCON Sustainability Requirements Scoresheet, Attachment 3 of "AF Sustainable Design Development Implementing Guidance Memo" http://www.wbdg.org/ccb/browse_cat.php?c=265

b. Army - Energy & Sustainability Record Card http://wbdg.org/ccb/ARMYCOE/COEECB/ecb_2013_25.pdf

c. Navy - NAVFAC Sustainability & Energy Data Record Card/High Performance and Sustainable Building Checklist http://www.wbdg.org/pdfs/navfac_sustainable_energy_data_record_card.pdf

1.5.2 "S" Submittals for Sustainability Documentation

Submit the GPV sustainability documentation required in this specification as "S" submittals. Highlight GPV compliance data in "S" submittal.

1.5.3 SUSTAINABILITY NOTEBOOK

Provide and maintain a comprehensive Sustainability Notebook to document compliance with the sustainability requirements identified in the approved HPSB Checklists. Sustainability Notebook must contain all required data

to support full compliance with the ISWG Guiding Principles Requirements. Sustainability Notebook is in the form of an Adobe PDF file; bookmarked at each ISWG Guiding Principles Requirement and sub-bookmarked at each document. Match format to ISWG Guiding Principles numbering system indicated herein. Maintain up to date information, spreadsheets, templates, and other required documentation with each current submittal.

Contracting Officer may deduct from the monthly progress payment accordingly if Sustainability Notebook information is not current, until information is updated and on track per project goals.

1.5.3.1 Sustainability Notebook Submittal Schedule

Provide Sustainability Notebook Submittals at the following milestones of the project:

a. Preliminary Sustainability Notebook

Submit preliminary Sustainability Notebook for approval at the Pre-construction conference. Include Preliminary High Performance and Sustainable Building Checklist.

b. Construction Progress Meetings. Update GP documentation in the Sustainability Notebook for each meeting.

c. Final Sustainability Notebook

Submit updated Sustainability Notebook within 60 days after the Beneficial Occupancy Date (BOD). Final progress payment retainage may be held by Contracting Officer until final sustainability documentation is complete. Submit three (3) electronic copies of the Final Sustainability Notebook on DVDs to the Government. Include Final High Performance and Sustainable Building Checklist.

d. Amended Final Sustainability Notebook

Amend and resubmit the Final Sustainability Notebook to include commissioning, testing and balancing, and collection of performance requirements. Submit three (3) final electronic copies of the Amended Final Sustainability Notebook Submittal on DVDs to the Government no longer than 30 days after the GP designated data collection period.

1.6 DOCUMENTATION REQUIREMENTS

Incorporate each of the following ISWG Guiding Principles Requirements into project construction; and provide documentation that proves compliance with each listed requirement. Items below are organized according to the ISWG Guiding Principles. For projects that require TPC, refer to Third Party Certifier's reference manuals for TPC requirements.

1.6.1 Commissioning

Work with the Commissioning Authority (CxA) to achieve requirements of the Commissioning plan and other contract document requirements at each stage of commissioning. Maintain up-to-date records of commissioning activities in the Sustainability Notebook, to include commissioning plan and summary commissioning report.

1.6.2 Energy Efficient Equipment

Provide only energy-using equipment that is Energy Star rated, or has the Federal Energy Management Program (FEMP) recommended efficiency. Where Energy Star or FEMP recommendations have not been established, provide most efficient equipment available. Provide only energy using equipment that meets FEMP requirements for low standby power consumption. Energy efficient equipment can be found at: http://www1.eere.energy.gov/femp/ and http://www.energystar.gov/. Provide the following documentation:

Proof that equipment is labeled energy efficient and complies with the cited requirements.

1.6.3 Benchmarking

Provide report of initial actual energy performance with the energy design targets. Provide the following documentation:

Prefinal Performance Report with data collected from the first 60 days of operation of the facility after Beneficial Occupancy Date (BOD). Submit this information with the Final Sustainability Notebook Submittal.

1.6.4 Water Conserving Fixtures

Provide only water-consuming products that are EPA WaterSense labeled, or the most efficient water fixtures available when EPA Watersense products are not available. Provide the following documentation:

Proof that water fixtures are efficient and comply with the cited requirements.

1.6.5 Reduce Volatile Organic Compounds (VOC) (Low Emitting Materials)

Provide materials and products with low pollutant emissions, including composite wood products, adhesives, sealants, interior paints and finishes, carpet systems, and furnishings. Meeting the requirements of ASHRAE 189.1 Sections 8.4.2 (Prescriptive Option: Materials) or Section 8.5.2 (Performance Option: Materials) demonstrates compliance. Insulation products must meet the requirements of Section 8.5.2 (Performance Option: Materials). Provide the following documentation:

a. Demonstrate that materials do not exceed maximum VOC emissions of cited standards. VOC averaging is allowed where coatings are subject to human contact or harsh environmental conditions.

b. Demonstrate that flooring materials comply with VOC emissions of cited standards.

c. Demonstrate that composite wood and agrifiber products and associated laminating adhesives contain no added urea-formaldehyde.

d. Demonstrate that furniture and seating complies with low emissions requirements.

e. Create and maintain a list of above listed products used on the project within the building vapor barrier. Demonstrate how product meets cited standards.

1.6.6 Indoor Air Quality During Construction

Prior to construction, create indoor air quality plan. Implement IAQ plan during construction and flush building air before occupancy.

a. Construction submittal documentation required:

(1) For new construction and for renovation of unoccupied existing buildings, comply with ASHRAE 189.1 Section 10.3.1.4. (Indoor Air Quality (IAQ) Construction Management), with maximum outdoor air consistent with achieving relative humidity no greater than 60 percent. For renovation of occupied existing buildings, comply with ANSI/SMACNA 008 IAQ Guidelines for Occupied Buildings Under Construction.

(2) Provide required documentation showing that after construction ends and prior to occupancy, new HVAC filters were installed, and building air was flushed out in accordance with UFC 1-200-02.

1.6.7 Environmentally Preferred Products

Use products designated for Federal procurement to meet environmentally preferred requirements. Provide the following documentation:

Provide list of environmentally preferable products used on this project that meet the requirements of UFC 1-200-02.

1.6.8 Recycled Content

Provide materials on this project with aggregated total recycled content equal to or greater than 10 percent. In addition, comply with 40 CFR 247. Refer to for assistance identifying products cited in 40 CFR 247. Provide the following documentation:

a. Total amount of recycled content contained in building materials as a percentage of total cost of all building materials on the project (mechanical, electrical, and plumbing components, fire protection equipment and transportation are excluded).

b. Manufacturers documents stating the recycled content by material, or written justification for claiming one of the exceptions allowed under RCRA 6002.

c. Substitutions: Contractor may submit for Government approval, proposed alternative products or systems that provide equivalent performance and appearance and have greater contribution to project recycled content requirements. For all such proposed substitutions, submit with the Sustainability Action Plan accompanied by product data demonstrating equivalence.

1.6.9 Bio-Based Products

Utilize products and material made from biobased materials to the maximum extent possible without jeopardizing the intended end use or detracting from the overall quality delivered to the end user. Use only supplies and materials of a type and quality that conform to applicable specifications and standards.

Biobased products that are designated for preferred procurement under the USDA BioPreferred Program must meet the required minimum biobased content. Refer to http://www.biopreferred.gov for the product categories and

BioPreferred Catalog. Provide the following documentation:

a. For biobased products used on this project, provide biobased product content percentage and biobased source of material. Indicate name of the manufacturer, cost of each product and the use of each product on this project.

b. For products that meet USDA Biopreferred Program, provide documentation of USDA Biopreferred label.

1.6.10 Waste Material Management (Recycling - Construction)

Divert construction debris from landfill disposal where markets or on-site recycling exists in accordance with Section 01 74 19 CONSTRUCTION AND DEMOLITION WASTE MANAGEMENT. Provide the following documentation:

a. Documentation showing total amount of construction debris diverted from landfill as a percentage of all construction debris on the project.

b. Include project's Construction Waste Management Plan and all dumpster haul tickets.

1.6.11 Ozone Depleting Substances

The use of CFC-based refrigerants in HVAC&R systems is prohibited. Eliminate the use of ozone depleting substances (CFC's, HCFCs, or Halons) during and after construction where alternative environmentally preferable products are available, taking into account lifecycle impacts. Meet the requirements of ASHRAE 189.1 Section 9.3.3 Refrigerants for no CFC-based refrigerants in heating ventilation, air conditioning and refrigeration systems (except for fire suppression system requirements, covered elsewhere in this specification). Provide the following documentation:

a. MSDS sheets for all refrigerants provided

b. Products that meet the criteria of U.S. EPA Significant New Alternatives Policy, available at http://www.epa.gov/ozone/snap/index.html.

1.6.12 Validation and Certification Restrictions

The Contractor's purchase of renewable energy certificates (RECs) specifically to meet project sustainability goals is prohibited.

PART 2 PRODUCTS

Not used.

PART 3 EXECUTION

3.1 SUSTAINABILITY COORDINATION

3.1.1 Coordinating Sustainability Documentation Progress

Provide sustainability focus and coordination at the following meetings to achieve sustainability goals. Contractor's designated sustainability professional responsible for GP documentation must participate in the following meetings to coordinate documentation completion.

a. Pre-Construction Conference: Discuss the following: HPSB Checklists, Sustainability Action Plan, Construction submittal requirements and schedule, individuals responsible for achieving each Guiding Principle Requirement.

b. Construction Progress Meetings: Review GP sustainability requirements with project team including contractor and sub-contractor representatives. Demonstrate GP documentation is being collected and updated to the Sustainability Notebook.

(1) Facility Turnover Meetings: Review Sustainability Notebook for completeness and identify any outstanding issues relating to final documentation requirements.

(2) Final Sustainability Notebook Review

-- End of Section --

NAVFAC SUSTAINABILITY AND ENERGY DATA --- *NEW CONSTRUCTION & MAJOR RENOVATION*

PROJECT INFORMATION

Work Order No.: 1558046 FY 2016 MILCON P No. / Customer Reference No.: Q1482
Project Title: MARINE SPECIAL OPERATIONS SCHOOL 120 MAN CLASSROOMS
Location/UIC: M67001 - MCB CAMP LEJEUNE
NAVFAC Project Manager: SCOTT LITTLEFIELD Project Dollar Amount $: _____
Project Type: CLASSROOM Project Design Level: DBB
Facility Area: _____ U/M: _____ Category Code: _____ Facility #: _____
AE Contract # & T.O. _____ AE Firm Sustainability Coordinator: _____
AE Firm Name: _____
Project Phase: ☐ Solicitation Documents Complete (Draft) ☐ Construction Complete (Final)
Construction Contract & T.O. _____ Award Date (P/A): _____ BOD (P/A): _____
Construction Contractor: _____
Contractor's Sustainability Coordinator: _____

SUSTAINABILITY DATA - GUIDING PRINCIPLES for SUSTAINABLE NEW CONSTRUCTION and MAJOR RENOVATION

Use this form to collect design and as-constructed project information to be recorded on the Sustainable and Energy Tab in eProjects

Provide justification for each target missed:

Sustainability Third Party Rating System: ☐ USGBC LEED ☑ GBI Green Globes ☐ Not Applicable ☐ Other

A Sustainability Certification Level - Target
☐ LEED Silver ☐ 2 Globes ☑ Other

Identify "Other" certification system and target level: GUIDING PRINCIPLES COMPLIANCE

B Sustainability Certification Level - Achieved
☐ LEED Certified ☐ LEED Silver ☐ LEED Gold ☐ LEED Platinum ☐ Not Met
☐ 1 Globe ☐ 2 Globes ☐ 3 Globes ☐ 4 Globes ☐ Other

Identify "Other" certification system and level achieved:

I. Employ Integrated Design Principles
I.a Integrated Assessment, Operation, and Management ☑ Included ☐ Not Included
I.b Commissioning (Select one)
☑ Commissioning ☐ No Commissioning

Systems Commissioned:

II. Optimize Energy Performance
II.a Energy Efficiency
i Energy Reduction 30% target _____
ii Efficiency Standard
☐ 90.1 - 2004 ☐ 90.1 - 2007 ☐ 90.1 - 2010
a. Total Design Energy Use Intensity (EUI): kBTU/Sq Ft/Year
iii New Technology: Provide description

II.b On-Site Renewable Energy
i. Solar Hot Water 30% target _____
ii. Renewable energy technology types (select all that apply)
☐ Daylighting ☐ Ground Source Heat Pumps ☐ Solar Photovoltaic
☐ Geothermal ☐ Mechanical (i.e., direct water pumping) ☐ Solar Thermal -domestic hot water
☐ Wind ☐ Solar Thermal -space conditioning
iii. Sustainable Roof Attribute (Select all that apply)
☐ Cool - white ☐ Cool - reflective ☐ Solar PV ☐ Solar Thermal ☐ Vegetated
II.c Building-level Metering (Measurement) ☐ Included ☐ Not Included

III. Protect and Conserve Water
III.a Indoor Water
i Reduce potable water _____
ii Building-level Metering (Measurement) ☐ Included ☐ Not Included
a. Total Design Indoor Water Use Intensity (WUI): Gallons/Sq Ft/Year _____

III.b Outdoor Water
i Reduce landscape water ☐ 50% below conventional ☐ 100% ☐ Not Met

IV. Enhance Indoor Environmental Quality
IV.a Ventilation and Thermal Comfort
i Thermal Environmental Conditions ☐ Met ☐ Not Met
ii Ventilation ☐ Met ☐ Not Met
IV.b Moisture Control Plan ☐ Included ☐ Not Included
IV.c Daylighting
i Minimum Daylight ☐ Met ☐ Not Met
ii Automatic dimming controls ☐ Included ☐ Not Included
IV.d Low-Emitting Materials ☐ Met ☐ Not Met

NAVFAC SUSTAINABILITY AND ENERGY DATA --- *NEW CONSTRUCTION & MAJOR RENOVATION*

IV.e Protect Indoor Air Quality during Construction ☐ Met ☐ Not Met

V. Reduce Environmental Impact of Materials

V.a Recycled Content: www.epa/gov/cpg ☐ Met ☐ Not Met

V.b Biobased Products ☐ Met ☐ Not Met

V.c Waste and Materials Management

i. Waste Diversion (50% targett) 0%

ii. Waste Management ☐ Included ☐ Not Included

V.d Ozone Depleting Compounds ☐ Met ☐ Not Met

To maintain prior project sustainability information, print and upload a copy of the completed worksheet to the Notes tab as Design & Criteria note BEFORE updating the tab.

GUIDANCE ON CALCULATION FOR EUI & WUI

1 The EUI must be calculated as the total Design Energy Consumption per year (including savings from renewables) divided by the total Building Area (including unconditioned indoor space).

a. The total Design Energy Consumption can be found in the Energy Cost Budget (ECB) Compliance Report. The Design Energy Consumption is in the Energy Summary by End Use Table at the bottom of page 2 of the ECB Report. The value is listed as Total Including Solar for the Proposed Building. It is the first field on the bottom row. (Units in the ECB Report are 10^6 Btu/yr, so multiply by 1000 to yield kBtu/yr

b. The total Building Area (including unconditioned indoor spaces) can be found in the Energy Cost Budget (ECB) Compliance Report in the Space Summary Table on page 1 of the ECB Report. The value is listed as Total (area) including Conditioned area and Unconditioned area. Insure the units are in square feet

2 The WUI must be calculated as the total Design Indoor Potable Water Consumption per year divided by the total Building Area (including unconditioned space).

a. The total Design Water Consumption can be found in the LEED WE P1 water consumption calculation *or* Green Globes 3.4.1.1 Water Consumption calculation. The value is the Design Case – Annual Potable Water Consumption. It is listed in units of Gallons/year

b. The total Building Area (including unconditioned spaces) can be found in the Energy Cost Budget (ECB) Compliance Report in the Space Summary Table on page 1 of the ECB Report. The value is listed as Total (area) including Conditioned area and Unconditioned area. Insure the units are in square feet

NAVFAC SUSTAINABILITY AND ENERGY DATA -- *RENOVATIONS >$2.5M &<50% PRV; OR ENERGY*

PROJECT INFORMATION

Work Order No.: 1558046 Budget FY 2016 Customer Reference No.: Q1482
Project Title: MARINE SPECIAL OPERATIONS SCHOOL 120 MAN CLASSROOMS
Location/UIC: M67001 - MCB CAMP LEJEUNE
NAVFAC Project Manager: SCOTT LITTLEFIELD Estimated Cost/PA:
Project Type: CLASSROOM Project Design Level: DBB
Facility Area: U/M: Category Code: Facility #:
AE Contract # & T.O. AE Firm Sustainability Coordinator:
AE Firm Name:
Project Phase: ☐ Solicitation Documents Complete (Draft) ☐ Construction Complete (Final)
Construction Contract & T.O. Award Date (P/A): BOD (P/A):
Construction Contractor:
Contractor's Sustainability Coordinator:

SUSTAINABILITY DATA - GUIDING PRINCIPLES for SUSTAINABLE EXISTING BUILDINGS

Use this form to collect design and as-constructed project information to be recorded on the Sustainable and Energy Tab in eProjects.

Provide justification for each target missed:

I. Employ Integrated Assessment, Operation, and Management Principles
- I.a Integrated Assessment, Operation, and Management ☑ Included ☐ Not Included
- I.b Commissioning (Select one)
  - ☑ Commissioning ☐ No Commissioning
  - ☐ Re-Commissioning ☐ Retro-Commissioning

Systems Commissioned

II. Optimize Energy Performance
- II.a Energy Efficiency
  - i Energy Reduction Below Baseline (20% target) ____ %
  - ii Efficiency Standard (Select one)
    - ☐ Energy Star 75 or higher ☐ Building Baseline 2003
    - ☐ ASHRAE 90.1-2007 ☐ ASHRAE 90.1-2010
    - a. Total Design Energy Use Intensity (**EUI**): kBTU/Sq Ft/Year
  - iii New Technology: Provide description
- II.b On-Site Renewable Energy
  - i. Solar Hot Water Demand (30% target)
  - ii. Renewable energy technology types (Select all that apply)
    - ☐ Daylighting ☐ Ground Source Heat Pumps ☐ Solar Photovoltaic
    - ☐ Geothermal ☐ Mechanical (i.e., direct water pumping) ☐ Solar Thermal -domestic hot water
    - ☐ Wind ☐ Solar Thermal -space conditioning
  - iii. Sustainable Roof Attribute (Select all that apply)
    - ☐ Cool - white ☐ Cool - reflective ☐ Solar PV ☐ Solar Thermal ☐ Vegetated
- II.c Building-level Metering (Measurement) ☐ Included ☐ Not Included

III. Protect and Conserve Water
- III.a Reduce Indoor Water
  - i Choose Option (Select one)
    - ☐ 20% below IPC or IBC ☐ 20% below bldg baseline 2003
  - ii Reduce potable water (percent) ____ %
  - ii Building-level Metering (Measurement) ☐ Included ☐ Not Included
    - a. Total Design Indoor Water Use Intensity (**WUI**): Gallons/Sq Ft/Year
- III.b Reduce landscape water (Select one) ☐ 50% below conventional ☐ 50% below building baseline 2003 ☐ 100%

IV. Enhance Indoor Environmental Quality
- IV.a Ventilation and Thermal Comfort
  - i Thermal Environmental Conditions ☐ Met ☐ Not Met
  - ii Ventilation ☐ Met ☐ Not Met
- IV.b Moisture Control Plan ☐ Included ☐ Not Included
- IV.c Daylighting and Lighting Controls
  - i Daylighting and lighting controls (Select one) ☐ 2% in 50% of occupied spaces ☐ Not Met
    ☐ 50% occupant control
  - ii Automatic lighting controls ☐ Included ☐ Not Included
- IV.d Low-Emitting Materials ☐ Met ☐ Not Met
- IV.e Protect Indoor Air Quality during Construction ☐ Met ☐ Not Met

V. Reduce Environmental Impact of Materials
- V.a Recycled Content: www.epa/gov/cpg ☐ Met ☐ Not Met
- V.b Biobased Products ☐ Met ☐ Not Met
- V.c Waste and Materials Management
  - i Waste Diversion - 50% target ____ %
  - ii Waste Management ☐ Included ☐ Not Included
- V.d Ozone Depleting Compounds ☐ Met ☐ Not Met

To maintain prior project sustainability information, print and upload a copy of the completed worksheet to the Notes tab as Design & Criteria note BEFORE updating the tab.

GUIDANCE ON CALCULATION FOR EUI & WUI

1 The **EUI** must be calculated as the total Design Energy Consumption per year (including savings from renewables) divided by the total Building Area (including unconditioned indoor space).

a. The total Design Energy Consumption can be found in the Energy Cost Budget (ECB) Compliance Report. The Design Energy Consumption is in the Energy Summary by End Use Table at the bottom of page 2 of the ECB Report. The value is listed as Total Including Solar for the Proposed Building. It is the first field on the bottom row. (Units in the ECB Report are 10^6 Btu/yr, so multiply by 1000 to yield kBtu/yr

b. The total Building Area (including unconditioned indoor spaces) can be found in the Energy Cost Budget (ECB) Compliance Report in the Space Summary Table on page 1 of the ECB Report. The value is listed as Total (area) including Conditioned area and Unconditioned area. Insure the units are in square feet

2 The **WUI** must be calculated as the total Design Indoor Potable Water Consumption per year divided by the total Building Area (including unconditioned space).

a. The total Design Water Consumption can be found in the LEED WE P1 water consumption calculation *or* Green Globes 3.4.1.1 Water Consumption calculation. The value is the Design Case – Annual Potable Water Consumption. It is listed in units of Gallons/year

b. The total Building Area (including unconditioned spaces) can be found in the Energy Cost Budget (ECB) Compliance Report in the Space Summary Table on page 1 of the ECB Report. The value is listed as Total (area) including Conditioned area and Unconditioned area. Insure the units are in square feet

2016 Guiding Principles Checklist for New Construction and Modernization v2.0

Per Executive Order 13693, the 2016 Guiding Principles were issued on February 26, 2016 by the White House Council on Environmental Quality, Office of Sustainability, in two documents: "Determining Compliance with the Guiding Principles for Sustainable Federal Buildings" (GP Compliance Document), which outlines evaluation criteria on which the Guiding Principles will be scored, and the "Guiding Principles for Sustainable Federal Buildings and Associated Instructions," which provides instructions, guidance and recommended practices. This Checklist was developed by the U.S. Department of Energy, Federal Energy Management Program, as a voluntary tool for evaluating and tracking a building's progress towards meeting the evaluation criteria defined in the GP Compliance Document. Agencies are invited to use this Checklist as is, or to reformat it to suit agency needs. Some cells in this worksheet are protected. For the password, contact the FEMP sustainability program at the link below.

For more information about the Guiding Principles and FEMP Support: **http://energy.gov/eere/femp/guiding-principles-sustainable-federal-buildings**

Agency: Navy	**Department/Region: NAVFAC MIDLANT**	**Federal Real Property ID:**
Building Name: P1482 120 Man Classroom	**Address: 9742 Maryland Avenue**	**Checklist Manager:**
Federal Campus: MCB Camp Lejeune, NC	**City & State: Norfolk, Virginia**	**Date: 6/8/2020**

Instructions: For new construction, 20 out of 21 metrics are required, and for modernization, 19 out of 21 metrics are required. *For building evaluation purposes, "not applicable" may be used where the building's inherent function, mission, safety, or designation prevents compliance with a specific Guiding Principle, element, or sub-element. "Not applicable" is equivalent to compliance with that Guiding Principle, element, or sub-element. Metrics marked as "N/A" should be justified and documented.*

Select Guiding Principle Metrics Type:	**New Construction Metrics**	**20**	**In Compliance**

(click menu above)

Guiding Principle	Required or Additional	Metric	Suggested Evidence of Compliance (may need one or more)	Compliance (dropdown box) Yes/No/In-Process/Not Applicable	Notes/Comments
I. Employ Integrated Assessment, Operation, and Management Principles					
Integrated Assessment, Operation, and Management	RQD	**1.** Consider the environmental impact of siting decisions and use an integrated project team to: establish energy and other environmental performance goals in the design process; follow sustainable landscape design principles; evaluate electric vehicle charging needs; consider design choices that improve environmental performance, support health and wellness of building occupants and consider climate risks including wildfire; and consider all stages of the building's life cycle.	☑ Integrated Team roster or equivalent ☑ Baseline Guiding Principles assessment ☐ Site assessment ☐ Sustainable design charrette ☐ Other	**Yes**	[Sample] Project uses Integrated Project team; Energy goals and environmental goals established via LEED Gold; Sustainable design charrette was held on May 16, 2016 with the project team. Meeting results are available.
Commissioning	RQD	**2.** Commission and recommission at least every 4 years to optimize building performance using commissioning agents who are independent of the design and construction or operating team. Commissioning should be consistent with the Energy Independence and Security Act (EISA) section 432[1] and Federal Energy Management Program (FEMP) commissioning guidance.[2]	☐ Commissioning report ☐ Other	**Yes**	
II. Optimize Energy Performance					
Energy Efficiency	RQD	**3.** A. For new construction, ensure energy efficiency is 30% better than the current American Society of Heating, Refrigerating and Air-Conditioning Engineers (ASHRAE) 90.1 standard, OR	☑ Document reduction calculation method and results ☐ ENERGY STAR Portfolio Manager documentation	**Yes**	
		B. For modernization, ensure: 1) Energy use is 20% below the fiscal year (FY) 2015 energy use baseline, OR 2) Energy use is 30% below the FY 2003 energy use baseline, OR 3) The building has an ENERGY STAR® rating of 75 or higher, OR 4) For building types not in ENERGY STAR Portfolio Manager, where adequate benchmarking data exists, the building is in the top quartile of energy performance for its building type, AND	☐ ENERGY STAR Portfolio Manager documentation ☑ Document reduction calculation method and results		
		C. Use energy efficient products, as required by statute	☐ Agency or site purchasing policy ☐ Purchasing contracts ☐ Purchase orders ☐ Affirmative procurement reports ☐ Other		
Renewable and Clean Energy	RQD	**4.** Evaluate and implement, where appropriate, life cycle cost-effective renewable energy projects on-site; consider long-term off-site renewable sources and Renewable Energy Certificates (RECs); and utilize clean and alternative energy where possible.	☐ Renewable energy contract ☐ Utility records ☐ Photos of on-site renewable ☐ Photos of alternative energy ☐ Proof of purchase of RECs ☐ Other	**Not Applicable**	
Metering	RQD	**5.** Install building level meters for electricity, natural gas, and steam; install advanced or standard meters as appropriate.	☐ Building-level utility bills ☑ Design specifications for advanced meters ☐ Photos of building-level meters ☐ Other	**Yes**	
Benchmarking	RQD	**6.** Benchmark building performance at least annually, preferably using ENERGY STAR Portfolio Manager; regularly monitor building energy performance against historic performance data and peer buildings.4	☐ ENERGY STAR Portfolio Manager documentation ☐ Other	**Yes**	
III. Protect and Conserve Water					
Indoor Water Use	RQD	**7.** A. Build to ASHRAE standard 189.1-2014 sections 6.3.2, 6.4.2, and 6.4.3, or current comparable ASHRAE standards, AND B. Use water-efficient products; install building level water meters; optimize cooling tower operations; and eliminate single pass cooling.	☐ Photos of building-level meters ☐ Building-level utility bills ☐ ENERGY STAR Portfolio Manager documentation ☐ Agency or site purchasing policy ☑ Document efficient products (photos, lists, product specs, etc.) ☐ Other	**Yes**	

Guiding Principle	Required or Additional	Metric	Suggested Evidence of Compliance (may need one or more)	Compliance (dropdown box) Yes/No/In-Process/Not Applicable	Notes/Comments
Outdoor Water Use	RQD	**8.** A. Separately meter water for irrigation systems greater than 25,000 square feet, AND B. Use water efficient landscapes, AND C. Limit potable water use for irrigation to 50% or more below conventional practices using methodologies from (but not the numeric requirements contained in) ASHRAE standard 189.1-2014 section 6.5.1, or current comparable ASHRAE standards, to calculate water use of conventional practices.	☑ Landscape plan and/or narrative of landscape ☐ Building-level utility bills (showing metered use for irrigation) ☐ Document when < 25,000 sf2 of landscape is irrigated ☑ Document when no water is used to irrigate ☐ Photos ☐ Other	**Yes**	[Sample] Drip irrigation to be used along side native plants for 15% of the landscape area. The remainder will have no irrigation.
Alternative Water	RQD	**9.**Consider alternative sources of water where cost-effective and permitted by local laws and regulations.	☐ Document consideration of alternative sources ☐ Document use of alternative water (photos, narrative, etc.) ☐ Other	**Not Applicable**	
Stormwater Management	RQD	**10.** For new construction meet or exceed EISA section 438 stormwater management requirements.	☑ Stormwater plan ☑ Stormwater permit ☑ Document stormwater strategies (photos, narrative, etc.) ☐ Other	**Yes**	
IV. Enhance Indoor Environmental Quality					
Ventilation and Thermal Comfort	RQD	**11.** Meet the current ASHRAE 55 and either 62.1or 62.2 standards for ventilation and thermal comfort.	☐ ENERGY STAR Certification ☑ Documentation from licensed architect, engineer or qualified building professional ☐ Other	**Yes**	
Daylighting and Lighting Controls	RQD	**12.** Maximize opportunities for daylighting in regularly occupied space, automatic dimming controls or accessible manual controls, task lighting, and shade and glare control.	☑ Schematic of floor layout ☑ Document (photos, list, narrative, design specifications, etc.) ☐ Other	**Yes**	
Indoor Air Quality	RQD	**13.** Develop and implement an indoor air quality policy that considers the following: moisture control, use of low emitting materials and products with low pollutant emissions, necessary protocols to protect indoor air quality during construction and in the finished building, prohibition of smoking in any form inside and within 25 feet of all building entrances, operable windows, and building ventilation intakes, and use of integrated pest management techniques.	☐ Indoor air quality policy ☑ Compilation of individual policies ☐ Other	**Yes**	
Occupant Health and Wellness	RQD	**14.** Promote opportunities for voluntary increased physical movement of building occupants such as making stairwells an option for circulation, active workstations, fitness centers, and bicycle commuter facilities; and support convenient access to healthy dining options, potable water, daylight, plants, and exterior views.	☐ Building or site-wide health and fitness programs ☐ Fitness centers ☐ Healthy dining options ☐ Active/ergonomic work stations ☑ Other	**Yes**	Due to the nature of this facility the occupants will be walking and working most of the day outside the office space.
V. Reduce the Environmental Impact of Materials					
Material Content and Performance	RQD	**15.** Procure products that meet the following requirements where applicable: A. RCRA section 6002, AND B. FSRIA section 9002, AND C. Federally Recommended Specifications, Standards and Ecolabels or are on the Federal Green Procurement Compilation for other green products, as appropriate, AND D. Avoid ozone depleting compounds and high GWP chemicals.	☐ Agency or site purchasing policy ☐ Other ☑ Document no ODC and GWP chemicals ☐ Plan to avoid ODC and GWP chemicals ☐ Other	**Yes**	
Waste Diversion	RQD	**16.** Where markets exist, provide reuse and recycling services for building occupants and divert at least 50% of non-hazardous non-construction related materials from landfills.	☑ Recycling contract ☐ Waste stream report/s ☐ Other	**Yes**	
Materials Management	RQD	**17.** Where markets exist, divert at least 50% of construction and demolition materials from landfills.	☐ Construction and Demolition (C&D) contract ☐ Construction and demolition policy ☑ Other	**Not Applicable**	
VI. Assess and Consider Climate Change Risks					
Mission Criticality	RQD	**18.** Determine long-term mission criticality of the physical asset and operations to be housed in the facility to inform the design of new construction and modernization to increase climate resilience.	☐ Climate resilience plan ☐ Other	**Yes**	
Floodplain Considerations	RQD - NC	**19.** For new construction, avoid, to the extent possible, the long- and short-term adverse impacts associated with the occupancy and modification of floodplains and avoid floodplain development whenever there is a practicable alternative.	☑ Site plan ☐ Other	**Yes**	
Design		**20.** For new construction, balance options to address predicted climate change impacts against mission criticality, cost, and	☑ Document building design features Climate resilience plan		

Guiding Principle	Required or Additional	Metric	Suggested Evidence of Compliance (may need one or more)	Compliance (dropdown box) Yes/No/In-Process/Not Applicable	Notes/Comments
Facility D	RQD -NC	security to determine design parameters; at a minimum, include low and no cost resilience measures to address predicted climate conditions.	☐ Climate resilience plan ☐ Other	**Yes**	
Facility Adaptation	RQD - M	**21.** For modernization, take action to mitigate identified risks, considering mission criticality, climate impacts, cost, and phased adaptation over time.	☐ Document building design features ☐ Climate resilience plan ☐ Other	**Not Applicable**	

Version 2.0 released 26 October 2016.

THIS PAGE HAS BEEN INTENTIONALLY LEFT BLANK

SECTION 01 35 26

GOVERNMENTAL SAFETY REQUIREMENTS
09/15

PART 1 GENERAL

1.1 REFERENCES

The publications listed below form a part of this specification to the extent referenced. The publications are referred to within the text by the basic designation only.

AMERICAN NATIONAL STANDARDS INSTITUTE (ANSI)

ANSI/HFES 100	(2007) Human Factors Engineering of Computer Workstations

AMERICAN SOCIETY OF SAFETY ENGINEERS (ASSE/SAFE)

ASSE/SAFE A10.32	(2012) Fall Protection
ASSE/SAFE A10.34	(2001; R 2012) Protection of the Public on or Adjacent to Construction Sites
ASSE/SAFE A1264.1	(2007) Safety Requirements for Workplace Walking/Working Surfaces and Their Access; Workplace, Floor, Wall and Roof Openings; Stairs and Guardrails Systems
ASSE/SAFE Z359.0	(2012) Definitions and Nomenclature Used for Fall Protection and Fall Arrest - Version 3
ASSE/SAFE Z359.1	(2007) Safety Requirements for Personal Fall Arrest Systems, Subsystems and Components
ASSE/SAFE Z359.2	(2007) Minimum Requirements for a Comprehensive Managed Fall Protection Program
ASSE/SAFE Z359.3	(2007) Safety Requirements for Positioning and Travel Restraint Systems
ASSE/SAFE Z359.4	(2013) Safety Requirements for Assisted-Rescue and Self-Rescue Systems, Subsystems and Components

ASME INTERNATIONAL (ASME)

ASME B30.22	(2010) Articulating Boom Cranes
ASME B30.3	(2012) Tower Cranes
ASME B30.5	(2014) Mobile and Locomotive Cranes
ASME B30.8	(2010) Floating Cranes and Floating

Derricks

ASTM INTERNATIONAL (ASTM)

ASTM F855	(2015) Standard Specifications for Temporary Protective Grounds to Be Used on De-energized Electric Power Lines and Equipment

INSTITUTE OF ELECTRICAL AND ELECTRONICS ENGINEERS (IEEE)

IEEE 1048	(2003) Guide for Protective Grounding of Power Lines
IEEE C2	(2012; Errata 2012; INT 1-4 2012; INT 5-7 2013; INT 8 2014) National Electrical Safety Code

INTERNATIONAL SAFETY EQUIPMENT ASSOCIATION (ISEA)

ANSI/ISEA Z87.1	(2010) Occupational and Educational Personal Eye and Face Protection Devices

NATIONAL FIRE PROTECTION ASSOCIATION (NFPA)

NFPA 1	(2015; ERTA 2015) Fire Code
NFPA 10	(2013) Standard for Portable Fire Extinguishers
NFPA 241	(2013) Standard for Safeguarding Construction,Alteration, and Demolition Operations
NFPA 51B	(2014) Standard for Fire Prevention During Welding, Cutting, and Other Hot Work
NFPA 70	(2014; AMD 1 2013; Errata 1 2013; AMD 2 2013; Errata 2 2013; AMD 3 2014; Errata 3-4 2014; AMD 4-6 2014) National Electrical Code
NFPA 70E	(2015; ERTA 1 2015) Standard for Electrical Safety in the Workplace

U.S. ARMY CORPS OF ENGINEERS (USACE)

EM 385-1-1	(2014) Safety and Health Requirements Manual

U.S. DEPARTMENT OF DEFENSE (DOD)

DOD HDBK 743A	(1991) Anthropometry of US Military Personnel
MIL-STD-1472	(2012; Rev G) Human Engineering

U.S. FEDERAL HIGHWAY ADMINISTRATION (FHWA)

MUTCD	(2009) Manual on Uniform Traffic Control Devices

U.S. NATIONAL ARCHIVES AND RECORDS ADMINISTRATION (NARA)

29 CFR 1910	Occupational Safety and Health Standards
29 CFR 1910.146	Permit-required Confined Spaces
29 CFR 1910.147	Control of Hazardous Energy (Lock Out/Tag Out)
29 CFR 1915	Confined and Enclosed Spaces and Other Dangerous Atmospheres in Shipyard Employment
29 CFR 1926	Safety and Health Regulations for Construction
29 CFR 1926.1400	Cranes & Derricks in Construction
29 CFR 1926.16	Rules of Construction
29 CFR 1926.500	Fall Protection
CPL 2.100	(1995) Application of the Permit-Required Confined Spaces (PRCS) Standards, 29 CFR 1910.146

U.S. NAVAL FACILITIES ENGINEERING COMMAND (NAVFAC)

NAVFAC P-307	(2009; Change 1 Mar 2011; Change 2 Aug 2011)Management of Weight Handling Equipment
ND OPNAVINST 5100.23	(2005; Rev G) Navy Occupational Safety and Health (NAVOSH) Program Manual

1.2 DEFINITIONS

a. Competent Person for Fall Protection. A person who is capable of identifying hazardous or dangerous conditions in the personal fall arrest system or any component thereof, as well as their application and use with related equipment, and has the authority to take prompt corrective measures to eliminate the hazards of falling.

b. High Visibility Accident. Any mishap which may generate publicity or high visibility.

c. Medical Treatment. Treatment administered by a physician or by registered professional personnel under the standing orders of a physician. Medical treatment does not include first aid treatment even though provided by a physician or registered personnel.

d. Operating Envelope. The area surrounding any crane. Inside this "envelope" is the crane, the operator, riggers and crane walkers, rigging gear between the hook and the load, the load and the crane's supporting structure (ground, rail, etc.).

e. Recordable Injuries or Illnesses. Any work-related injury or illness that results in:

(1) Death, regardless of the time between the injury and death, or the length of the illness;

(2) Days away from work (any time lost after day of injury/illness onset);

(3) Restricted work;

(4) Transfer to another job;

(5) Medical treatment beyond first aid;

(6) Loss of consciousness; or

(7) A significant injury or illness diagnosed by a physician or other licensed health care professional, even if it did not result in (1) through (6) above.

f. "USACE" property and equipment specified in USACE EM 385-1-1 should be interpreted as Government property and equipment.

g. Weight Handling Equipment (WHE) Accident. A WHE accident occurs when any one or more of the eight elements in the operating envelope fails to perform correctly during operation, including operation during maintenance or testing resulting in personnel injury or death; material or equipment damage; dropped load; derailment; two-blocking; overload; or collision, including unplanned contact between the load, crane, or other objects. A dropped load, derailment, two-blocking, overload and collision are considered accidents even though no material damage or injury occurs. A component failure (e.g., motor burnout, gear tooth failure, bearing failure) is not considered an accident solely due to material or equipment damage unless the component failure results in damage to other components (e.g., dropped boom, dropped load, roll over, etc.) Any mishap meeting the criteria described above shall be documented in both the Contractor Significant Incident Report (CSIR) and using the NAVFAC prescribed Navy Crane Center (NCC) form submitted within five days both as provided by the Contracting Officer. Comply with additional requirements and procedures for accidents in accordance with NAVFAC P-307, Section 12.

h. Internal Traffic Control Plan (ITCP). Strategies to control the flow of construction workers, vehicles and equipment inside the work zone.

1.3 SUBMITTALS

Government approval is required for submittals with a "G" designation; submittals not having a "G" designation are for Contractor Quality Control approval. Submit the following in accordance with Section 01 33 00 SUBMITTAL PROCEDURES:

Government acceptance is required for submittals with a "G, A" designation.

SD-01 Preconstruction Submittals

Accident Prevention Plan (APP); G, A

Activity Hazard Analysis (AHA); G, A

Crane Critical Lift Plan; G, A

Proof of qualification for Crane Operators; G, A

Traffic Control Plan; G, A

Standard Hand Signals; G, A

SD-06 Test Reports

Notifications and Reports

Submit reports as their incidence occurs, in accordance with the requirements of the paragraph entitled, "Notifications and Reports."

Accident Reports

Arc Flash Risk/Hazard Analysis; G

SD-07 Certificates

Confined Space Entry Permit

Hot work permit

Arc Flash Risk/Hazard Analysis Qualifications; G

Contractor Electrical Energized Work Permit; G

Contractor Safety Self-Evaluation Checklist; G, A

Certificate of Compliance (Crane)
Submit one copy of each permit/certificate attached to each Daily Quality Control Report.

1.4 CONTRACTOR SAFETY SELF-EVALUATION CHECKLIST

Contracting Officer will provide a "Contractor Safety Self-Evaluation checklist" to the Contractor at the pre-construction conference. Complete the checklist monthly and submit with each request for payment voucher. An acceptable score of 90 or greater is required. Failure to submit the completed safety self-evaluation checklist or achieve a score of at least 90 may result in retention of up to 10 percent of the voucher. Additionally, provide a Monthly Exposure Report and attach to the monthly billing request. This report is a compilation of employee-hours worked each month for all site workers, both prime and subcontractor. Failure to submit the report may result in retention of up to 10 percent of the voucher. The Contracting Officer will submit a copy of the Contractor Safety Self-Evaluation and Monthly Exposure Report to the local safety and occupational health office.

1.5 REGULATORY REQUIREMENTS

In addition to the detailed requirements included in the provisions of this contract, comply with the most recent edition of USACE EM 385-1-1, NFPA 70E, IEEE C2 and federal, state, and local, laws, ordinances,

criteria, rules and regulations. Submit matters of interpretation of standards to the appropriate administrative agency for resolution before starting work. Where the requirements of this specification, applicable laws, criteria, ordinances, regulations, and referenced documents vary, the most stringent requirements govern.

1.6 SITE QUALIFICATIONS, DUTIES AND MEETINGS

1.6.1 Personnel Qualifications

1.6.1.1 Site Safety and Health Officer (SSHO)

The SSHO must meet the requirements of EM 385-1-1 section 1 and ensure that the requirements of 29 CFR 1926.16 are met for the project. Provide a Safety oversight team that includes a minimum of one (1) person at each project site to function as the Site Safety and Health Officer (SSHO). The SSHO or an equally-qualified Designated Representative/alternate shall be at the work site at all times to implement and administer the Contractor's safety program and government-accepted Accident Prevention Plan. The SSHO's training, experience, and qualifications shall be as required by EM 385-1-1 paragraph 01.A.17, entitled SITE SAFETY AND HEALTH OFFICER (SSHO), and all associated sub-paragraphs.

A Competent Person shall be provided for all of the hazards identified in the Contractor's Safety and Health Program in accordance with the accepted Accident Prevention Plan, and shall be on-site at all times when the work that presents the hazards associated with their professional expertise is being performed. Provide the credentials of the Competent Persons(s) to the the Contracting Officer for acceptance in consultation with the Safety Office.

1.6.1.1.1 Contractor Quality Control (QC) Person

The Contractor Quality Control Person can be the SSHO on this project.

1.6.1.2 Crane Operators

Meet the crane operators requirements in USACE EM 385-1-1, Section 16 and Appendix I. In addition, for mobile cranes, designate crane operators as qualified by a source that qualifies crane operators (i.e., union, a government agency, or and organization that tests and qualifies crane operators). Provide proof of current qualification. In addition, the Contractor shall comply with Contractor Operated Crane Requirements included in the latest revision of document NAVFAC P-307 Section 1.7.2 "Contractor Operated Cranes," and Appendix P, Figure P-1 and with 29 CFR 1926, Subpart CC.

1.6.2 Personnel Duties

1.6.2.1 Site Safety and Health Officer (SSHO)

The SSHO shall:

a. Conduct daily safety and health inspections and maintain a written log which includes area/operation inspected, date of inspection, identified hazards, recommended corrective actions, estimated and actual dates of corrections. Attach safety inspection logs to the Contractors' daily quality control report.

b. Conduct mishap investigations and complete required reports. Maintain the OSHA Form 300 and Daily Production reports for prime and sub-contractors.

c. Maintain applicable safety reference material on the job site.

d. Attend the pre-construction conference, pre-work meetings including preparatory inspection meeting, and periodic in-progress meetings.

e. Implement and enforce accepted APPS and AHAs.

f. Maintain a safety and health deficiency tracking system that monitors outstanding deficiencies until resolution. Post a list of unresolved safety and health deficiencies on the safety bulletin board.

g. Ensure sub-contractor compliance with safety and health requirements.

h. Ensure an approved "Contractor Electrical Energized Work Permit" prior to starting any activity on energized electrical systems.

i. Maintain a list of hazardous chemicals on site and their material safety data sheets.

Failure to perform the above duties will result in dismissal of the superintendent, QC Manager, and/or SSHO, and a project work stoppage. The project work stoppage will remain in effect pending approval of a suitable replacement.

1.6.3 Meetings

1.6.3.1 Preconstruction Conference

a. Contractor representatives who have a responsibility or significant role in accident prevention on the project shall attend the preconstruction conference. This includes the project superintendent, site safety and health officer, quality control supervisor, or any other assigned safety and health professionals who participated in the development of the APP (including the Activity Hazard Analyses (AHAs) and special plans, program and procedures associated with it).

b. Discuss the details of the submitted APP to include incorporated plans, programs, procedures and a listing of anticipated AHAs that will be developed and implemented during the performance of the contract. This list of proposed AHAs will be reviewed at the conference and an agreement will be reached between the Contractor and the Contracting Officer's representative as to which phases will require an analysis. In addition, establish a schedule for the preparation, submittal, review, and acceptance of AHAs to preclude project delays.

c. Deficiencies in the submitted APP will be brought to the attention of the Contractor at the preconstruction conference, and the Contractor shall revise the plan to correct deficiencies and re-submit it for acceptance. Do not begin work until there is an accepted APP.

d. The functions of a Preconstruction conference may take place at the Post-Award Kickoff meeting for Design Build Contracts.

1.6.3.2 Safety Meetings

Conduct and document meetings as required by EM 385-1-1. Attach minutes showing contract title, signatures of attendees and a list of topics discussed to the Contractors' daily quality control report.

1.7 ACCIDENT PREVENTION PLAN (APP)

Use a qualified person to prepare the written site-specific APP. Prepare the APP in accordance with the format and requirements of USACE EM 385-1-1 and as supplemented herein. Cover all paragraph and subparagraph elements in USACE EM 385-1-1, Appendix A, "Minimum Basic Outline for Accident Prevention Plan". Specific requirements for some of the APP elements are described below. The APP shall be job-specific and address any unusual or unique aspects of the project or activity for which it is written. The APP shall interface with the Contractor's overall safety and health program. Include any portions of the Contractor's overall safety and health program referenced in the APP in the applicable APP element and made site-specific. The Government considers the Prime Contractor to be the "controlling authority" for all work site safety and health of the subcontractors. Contractors are responsible for informing their subcontractors of the safety provisions under the terms of the contract and the penalties for noncompliance, coordinating the work to prevent one craft from interfering with or creating hazardous working conditions for other crafts, and inspecting subcontractor operations to ensure that accident prevention responsibilities are being carried out. The APP shall be signed by the person and firm (senior person) preparing the APP, the Contractor, the on-site superintendent, the designated site safety and health officer, the Contractor Quality Control Manager, and any designated CSP or CIH.

Submit the APP to the Contracting Officer 15 calendar days prior to the date of the preconstruction conference for acceptance. Work cannot proceed without an accepted APP.

Once accepted by the Contracting Officer, the APP and attachments will be enforced as part of the contract. Disregarding the provisions of this contract or the accepted APP will be cause for stopping of work, at the discretion of the Contracting Officer, until the matter has been rectified.

Once work begins, changes to the accepted APP shall be made with the knowledge and concurrence of the Contracting Officer, project superintendent, SSHO and quality control manager. Should any severe hazard exposure, i.e. imminent danger, become evident, stop work in the area, secure the area, and develop a plan to remove the exposure and control the hazard. Notify the Contracting Officer within 24 hours of discovery. Eliminate/remove the hazard. In the interim, take all necessary action to restore and maintain safe working conditions in order to safeguard onsite personnel, visitors, the public (as defined by ASSE/SAFE A10.34,) and the environment.

Copies of the accepted plan will be maintained at the Contracting Officer's office and at the job site. Continuously review and amend the APP, as necessary, throughout the life of the contract. Incorporate unusual or high-hazard activities not identified in the original APP as they are discovered.

1.7.1 EM 385-1-1 Contents

In addition to the requirements outlined in Appendix A of USACE EM 385-1-1,

the following is required:

a. Names and qualifications (resumes including education, training, experience and certifications) of all site safety and health personnel designated to perform work on this project to include the designated site safety and health officer and other competent and qualified personnel to be used such as CSPs, CIHs, STSs, CHSTs. Specify the duties of each position.

b. Qualifications of competent and of qualified persons. As a minimum, designate and submit qualifications of competent persons for each of the following major areas: excavation; scaffolding; fall protection; hazardous energy; confined space; health hazard recognition, evaluation and control of chemical, physical and biological agents; personal protective equipment and clothing to include selection, use and maintenance.

c. Confined Space Entry Plan. Develop a confined and/or enclosed space entry plan in accordance with USACE EM 385-1-1, applicable OSHA standards 29 CFR 1910, 29 CFR 1915, and 29 CFR 1926, OSHA Directive CPL 2.100, and any other federal, state and local regulatory requirements identified in this contract. Identify the qualified person's name and qualifications, training, and experience. Delineate the qualified person's authority to direct work stoppage in the event of hazardous conditions. Include procedure for rescue by contractor personnel and the coordination with emergency responders. (If there is no confined space work, include a statement that no confined space work exists and none will be created.)

d. Crane Critical Lift Plan. Prepare and sign weight handling critical lift plans for lifts over 75 percent of the capacity of the crane or hoist (or lifts over 50 percent of the capacity of a barge mounted mobile crane's hoists) at any radius of lift; lifts involving more than one crane or hoist; lifts of personnel; and lifts involving non-routine rigging or operation, sensitive equipment, or unusual safety risks. Submit 15 calendar days prior to on-site work and include the requirements of USACE EM 385-1-1, paragraph 16.H. and the following:

(1) For lifts of personnel, demonstrate compliance with the requirements of 29 CFR 1926.1400.

(2) For barge mounted mobile cranes, barge stability calculations identifying barge list and trim based on anticipated loading; and load charts based on calculated list and trim. The amount of list and trim shall be within the crane manufacturer's requirements.

e. Fall Protection and Prevention (FP&P) Program Documentation. The program documentation shall be site specific and address all fall hazards in the work place and during different phases of construction. Address how to protect and prevent workers from falling to lower levels when they are exposed to fall hazards above 6 feet. A qualified person for fall protection shall prepare and sign the program documentation. Include fall protection and prevention systems, equipment and methods employed for every phase of work, responsibilities, assisted rescue, self-rescue and evacuation procedures, training requirements, and monitoring methods. Revise the Fall Protection and Prevention Program Documentation for lengthy projects, reflecting any changes during the course of construction due

to changes in personnel, equipment, systems or work habits. Keep and maintain the accepted Fall Protection and Prevention Program Documentation at the job site for the duration of the project. Include the Fall Protection and Prevention Program Documentation in the Accident Prevention Plan (APP).

The FP&P Plan shall include a Rescue and Evacuation Plan in accordance with USACE EM 385-1-1, Section 21.M. The plan shall include a detailed discussion of the following: methods of rescue; methods of self-rescue; equipment used; training requirement; specialized training for the rescuers; procedures for requesting rescue and medical assistance; and transportation routes to a medical facility. Include the Rescue and Evacuation Plan in the Fall Protection and Prevention (FP&P) Plan, and as part of the Accident Prevention Plan (APP).

l. Excavation Plan. The safety and health aspects prepared in accordance with Section 31 23 00.00 20 EXCAVATION AND FILL.

1.8 ACTIVITY HAZARD ANALYSIS (AHA)

The Activity Hazard Analysis (AHA) format shall be in accordance with USACE EM 385-1-1, Section 1. NAVFAC Midlant shall follow latest edition authorized by command. Submit the AHA for review at least 7 calendar days prior to the start of each phase. Format subsequent AHAs as amendments to the APP. The analysis should be used during daily inspections to ensure the implementation and effectiveness of the activity's safety and health controls.

The AHA list will be reviewed periodically (at least monthly) at the Contractor supervisory safety meeting and updated as necessary when procedures, scheduling, or hazards change.

Develop the activity hazard analyses using the project schedule as the basis for the activities performed. Any activities listed on the project schedule will require an AHA. The AHAs will be developed by the contractor, supplier or subcontractor and provided to the prime contractor for submittal to the Contracting Officer.

1.9 DISPLAY OF SAFETY INFORMATION

Within 1 calendar day after commencement of work, erect a safety bulletin board at the job site. Where size, duration, or logistics of project do not facilitate a bulletin board, an alternative method, acceptable to the Contracting Officer, that is accessible and includes all mandatory information for employee and visitor review, shall be deemed as meeting the requirement for a bulletin board. Include and maintain information on

safety bulletin board as required by EM 385-1-1, section 01.A.06. Additional items required to be posted include:

a. Confined space entry permit.

b. Hot work permit.

c. Contractor Electrical Energized Work Permit.

1.10 SITE SAFETY REFERENCE MATERIALS

Maintain safety-related references applicable to the project, including those listed in the article "References." Maintain applicable equipment manufacturer's manuals.

1.11 EMERGENCY MEDICAL TREATMENT

Contractors will arrange for their own emergency medical treatment. Government has no responsibility to provide emergency medical treatment.

1.12 NOTIFICATIONS AND REPORTS

1.12.1 Accident Notification

Notify the Contracting Officer as soon as practical, but not later than four hours, after any accident meeting the definition of Recordable Injuries or Illnesses or High Visibility Accidents, property damage equal to or greater than $2,000, or any weight handling equipment accident. Within notification include contractor name; contract title; type of contract; name of activity, installation or location where accident occurred; date and time of accident; names of personnel injured; extent of property damage, if any; extent of injury, if known, and brief description of accident (to include type of construction equipment used, PPE used, etc.). Preserve the conditions and evidence on the accident site until the Government investigation team arrives on-site and Government investigation is conducted.

1.12.2 Accident Reports

a. Conduct an accident investigation for recordable injuries and illnesses, for Medical Treatment defined in paragraph DEFINITIONS, property damage accidents resulting in at least $20,000 in damages, and near misses as defined in EM 385-1-1, to establish the root cause(s) of the accident. Complete the Contractor Incident Report (CIR), and electronically file the report in ESAMS within 5 calendar day(s) of the accident.

b. Near Misses: Complete the applicable documentation in NAVFAC Contractor Incident Reporting System (CIRS), and electronically submit via the NAVFAC Enterprise Safety Applications Management System (ESAMS).

c. Conduct an accident investigation for any weight handling equipment accident (including rigging gear accidents) to establish the root cause(s) of the accident, complete the WHE Accident Report (Crane and Rigging Gear) form and provide the report to the Contracting Officer within 30 calendar days of the accident. Do not proceed with crane operations until cause is determined and corrective actions have been implemented to the satisfaction of the contracting officer. The

Contracting Officer will provide a blank copy of the accident report form.

1.12.3 Certificate of Compliance

Provide a Certificate of Compliance for each crane entering an activity under this contract (see Contracting Officer for a blank certificate). State within the certificate that the crane and rigging gear meet applicable OSHA regulations (with the Contractor citing which OSHA regulations are applicable, e.g., cranes used in construction, demolition, or maintenance comply with 29 CFR 1926 and USACE EM 385-1-1 Section 16 and Appendix I. Certify on the Certificate of Compliance that the crane operator(s) is qualified and trained in the operation of the crane to be used. Also certify that all of its crane operators working on the DOD activity have been trained in the proper use of all safety devices (e.g., anti-two block devices). Post certifications on the crane.

1.13 HOT WORK (Welding And Cutting, Etc.)

Hot work permits will only be issued to the Prime Contractor. Prime Contractor shall notify FEAD/ROICC office of issuance of hot work permits and all renewals of hot work permits. Copies of all hot work permits and renewals shall be attached to daily quality control reports.

Submit and obtain a written permit prior to performing "Hot Work" (welding, cutting, etc.) or operating other flame-producing/spark producing devices, from the Fire Division. A permit is required from the Explosives Safety Office for work in and around where explosives are processed, stored, or handled. CONTRACTORS ARE REQUIRED TO MEET ALL CRITERIA BEFORE A PERMIT IS ISSUED. Provide at least two (2) twenty (20) pound 4A:20 BC rated extinguishers for normal "Hot Work". All extinguishers shall be current inspection tagged, approved safety pin and tamper resistant seal. It is also mandatory to have a designated FIRE WATCH for any "Hot Work" done at this activity. The Fire Watch shall be trained in accordance with NFPA 51B and remain on-site for a minimum of 30 minutes after completion of the task or as specified on the hot work permit.

When starting work in the facility, require personnel to familiarize themselves with the location of the nearest fire alarm boxes and place in memory the emergency Fire Division phone number. ANY FIRE, NO MATTER HOW SMALL, SHALL BE REPORTED TO THE RESPONSIBLE FIRE DIVISION IMMEDIATELY.

1.14 FACILITY OCCUPANCY CLOSURE

Streets, walks, and other facilities occupied and used by the Government shall not be closed or obstructed without written permission from the Contracting Officer.

1.15 SEVERE STORM PLAN

In the event of a severe storm warning, the Contractor must:

a. Secure outside equipment and materials and place materials that could be damaged in protected areas.

b. Check surrounding area, including roof, for loose material, equipment,

debris, and other objects that could be blown away or against existing facilities.

c. Ensure that temporary erosion controls are adequate.

1.16 CONFINED SPACE ENTRY REQUIREMENTS.

Contractors entering and working in confined spaces performing general industry work are required to follow the requirements of OSHA 29 CFR 1910, 29 CFR 1910.146, and EM 385-1-1 Section 34 Confined Space Entry.

NAVFAC personnel entering and working in confined spaces performing non-maritime facility work are required to follow the requirements of ND OPNAVINST 5100.23 Chapter 27.

1.17 TRAFFIC CONTROL

The requirements contained in this paragraph are in addition to the requirements contained in EM 385-1-1. In case of a conflict, the more stringent requirement applies. Traffic Control shall be accomplished in accordance with MUTCD.

1.17.1 Traffic Control Plan

Prior to the commencement of contract operations, the Contractor shall submit for acceptance the complete details of the proposed traffic control plan for the maintenance of traffic and access through the contract work area.

Include traffic control and traffic control signal systems in each Activity Hazard Analysis as applicable.

1.17.2 Signal Systems, Personnel And Procedures

Signal systems, personnel and procedures shall comply with EM 385-1-1 Section 08.B SIGNAL SYSTEMS, PERSONNEL AND PROCEDURES.

1.17.2.1 Standard Hand Signals

Standard hand signals shall be submitted for acceptance and shall be posted at the operator's position, signal control points and other points as necessary to inform those concerned.

1.17.3 Road Closings

Traffic control is extremely important on highways, in residential areas, and at construction sites. When traffic may pose a hazard to operations, public roads will be closed. Road closings shall be coordinated in writing with appropriate local agencies. Traffic controls and signage shall comply with MUTCD.

1.17.4 Operating Precautions

When a road cannot be closed, the following precautions shall be taken:

a. “FLAGGER” (MUTCD W-20-7) or “WORKERS AHEAD: (W21-1) or similar appropriate signs shall be placed along the roadway, 1,000 ft (304.8m) and 500 ft (30.5 m) before the work zone, on both sides of the work zone”.

b. Sufficient number of flag persons shall be used to control traffic within the work area.

c. Flag persons shall be used and shall receive instruction in flagging operations before being placed in traffic (training and certification by the National Safety Council (NSC) is recommended).

d. All flag persons shall wear high-visibility apparel in accordance with EM 385-1-1, paragraph 05.F, safety-toed footwear and hard hats.

e. "STOP/SLOW" paddles, preferably mounted on a 6 ft staff, will be used for traffic control.

f. Flag persons shall be able to communicate with each other and with the foreman, and effectively signal/direct the affected public.

g. Two-way radios shall be used whenever visual contact between flaggers is not maintained.

1.17.5 Construction Vehicles

All construction vehicles and all vehicles exceeding 1-1/2 tons (1360.8 kg) shall have a signal person to assist in backing and maneuvering in residential and construction areas.

1.17.6 Internal Traffic Control Plans (ITCP)

Internal traffic control plans (ITCP) (written plans which address separation and safety of personnel and moving equipment) will be attached to all AHA's when interaction between personnel and moving equipment will occur or physical changes occur onsite which could affect personnel or moving equipment.

PART 2 PRODUCTS

2.1 CONFINED SPACE SIGNAGE

Provide permanent signs integral to or securely attached to access covers for new permit-required confined spaces. Signs wording: "DANGER--PERMIT-REQUIRED CONFINED SPACE - DO NOT ENTER -" in bold letters a minimum of one inch in height and constructed to be clearly legible with all paint removed. The signal word "DANGER" shall be red and readable from 5 feet.

PART 3 EXECUTION

3.1 CONSTRUCTION AND/OR OTHER WORK

Comply with USACE EM 385-1-1, NFPA 1, NFPA 70, NFPA 70E, NFPA 241, IEEE C2, the APP, the AHA, Federal and/or State OSHA regulations, and other related submittals and activity fire and safety regulations. The most stringent standard prevails.

PPE is required at all times, in accordance with EM 385-1-1, for all personnel who enters a construction site area. In addition to the requirements of EM 385-1-1, Safety Glasses ANSI/ISEA Z87.1 will be worn at all times on construction sites, unless the competent person identifies in the Contractor's accepted activity hazard analysis that an equal or

greater hazard is presented in the mandatory wearing of safety glasses. Use personal hearing protection at all times in designated noise hazardous areas or when performing noise hazardous tasks.

Mandatory PPE on all construction sites includes:

a. Hard Hat

b. Safety Glasses

c. Safety-Toed Shoes or Boots

3.1.1 Hazardous Material Use

Each hazardous material must receive approval from the Contracting Officer or their designated representative prior to being brought onto the job site or prior to any other use in connection with this contract. Allow a minimum of 10 working days for processing of the request for use of a hazardous material.

3.1.2 Hazardous Material Exclusions

Notwithstanding any other hazardous material used in this contract, radioactive materials or instruments capable of producing ionizing/non-ionizing radiation (with the exception of radioactive material and devices used in accordance with USACE EM 385-1-1 such as nuclear density meters for compaction testing and laboratory equipment with radioactive sources) as well as materials which contain asbestos, mercury or polychlorinated biphenyls, di-isocynates, lead-based paint are prohibited. The Contracting Officer, upon written request by the Contractor, may consider exceptions to the use of any of the above excluded materials. Low mercury lamps used within fluorescent lighting fixtures are allowed as an exception without further Contracting Officer approval. Notify the Radiation Safety Officer (RSO) prior to excepted items of radioactive material and devices being brought on base.

3.1.3 Unforeseen Hazardous Material

The design should have identified materials such as PCB, lead paint, and friable and non-friable asbestos, and other OSHA regulated chemicals (i.e. 29 CFR Part 1910.1000). If additional material, not indicated, that may be hazardous to human health upon disturbance during construction operations is encountered, stop that portion of work and notify the Contracting Officer immediately. Within 14 calendar days the Government will determine if the material is hazardous. If material is not hazardous or poses no danger, the Government will direct the Contractor to proceed without change. If material is hazardous and handling of the material is necessary to accomplish the work, the Government will issue a modification pursuant to "FAR 52.243-4, Changes" and "FAR 52.236-2, Differing Site Conditions."

3.2 PRE-OUTAGE COORDINATION MEETING

Apply for utility outages at least 15 days in advance. As a minimum, the request should include the location of the outage, utilities being affected, duration of outage and any necessary sketches. Special requirements for electrical outage requests are contained elsewhere in this specification section. Once approved, and prior to beginning work on the utility system requiring shut down, attend a pre-outage coordination

meeting with the Contracting Officer to review the scope of work and the lock-out/tag-out procedures for worker protection. No work will be performed on energized electrical circuits unless proof is provided that no other means exist. For electrical work positive cable/circuit identification must be made prior to submitting any outage request. Arrangements are to be coordinated with the Contracting Officer and Station Utilities for identification. The Contracting Officer will not accept an outage request until the Contractor satisfactorily documents that the circuits have been clearly identified. Following the application of lockout/tag out devices to all hazardous energy sources, applicable AHA should outline equipment restart methods to ensure "zero energy" state has been accomplished.

3.3 CONTROL OF HAZARDOUS ENERGY (LOCKOUT/TAGOUT)

Ensure that each employee is familiar with and complies with these procedures and USACE EM 385-1-1, Section 12, Control of Hazardous Energy.

3.4 FALL HAZARD PROTECTION AND PREVENTION PROGRAM

Establish a fall protection and prevention program, for the protection of all employees exposed to fall hazards. Within the program include company policy, identify responsibilities, education and training requirements, fall hazard identification, prevention and control measures, inspection, storage, care and maintenance of fall protection equipment and rescue and evacuation procedures.

3.4.1 Training

Institute a fall protection training program. As part of the Fall Hazard Protection and Prevention Program, provide training for each employee who might be exposed to fall hazards. Provide training by a competent person for fall protection in accordance with USACE EM 385-1-1, Section 21.B.

3.4.2 Fall Protection Equipment and Systems

Enforce use of the fall protection equipment and systems designated for each specific work activity in the Fall Protection and Prevention Plan and/or AHA at all times when an employee is exposed to a fall hazard. Protect employees from fall hazards as specified in EM 385-1-1, Section 21. In addition to the required fall protection systems, safety skiff, personal floatation devices, life rings etc., are required when working above or next to water in accordance with USACE EM 385-1-1, Paragraphs 21.N through 21.N.04. Personal fall arrest systems are required when working from an articulating or extendible boom, swing stages, or suspended platform. In addition, personal fall arrest systems are required when operating other equipment such as scissor lifts if the work platform is capable of being positioned outside the wheelbase. The need for tying-off in such equipment is to prevent ejection of the employee from the equipment during raising, lowering, or travel. Fall protection must comply with 29 CFR 1926.500, Subpart M, USACE EM 385-1-1 and ASSE/SAFE A10.32.

3.4.2.1 Personal Fall Arrest Equipment

Personal fall arrest equipment, systems, subsystems, and components shall meet ASSE/SAFE Z359.1. Only a full-body harness with a shock-absorbing lanyard or self-retracting lanyard is an acceptable personal fall arrest body support device. Body belts may only be used as a positioning device

system (for uses such as steel reinforcing assembly and in addition to an approved fall arrest system). Harnesses shall have a fall arrest attachment affixed to the body support (usually a Dorsal D-ring) and specifically designated for attachment to the rest of the system. Only locking snap hooks and carabiners shall be used. Webbing, straps, and ropes shall be made of synthetic fiber. The maximum free fall distance when using fall arrest equipment shall not exceed 6 feet. The total fall distance and any swinging of the worker (pendulum-like motion) that can occur during a fall shall always be taken into consideration when attaching a person to a fall arrest system.

3.4.3 Fall Protection for Roofing Work

Implement fall protection controls based on the type of roof being constructed and work being performed. Evaluate the roof area to be accessed for its structural integrity including weight-bearing capabilities for the projected loading.

a. Low Sloped Roofs:

(1) For work within 6 feet of an edge, on low-slope roofs, protect personnel from falling by use of personal fall arrest systems, guardrails, or safety nets. A safety monitoring system used by itself as the only form of fall protection system is not adequate fall protection and is not authorized.

(2) For work greater than 6 feet from an edge, erect and install warning lines in accordance with 29 CFR 1926.500 and USACE EM 385-1-1.

b. Steep-Sloped Roofs: Work on steep-sloped roofs requires a personal fall arrest system, guardrails with toe-boards, or safety nets. This requirement also includes residential or housing type construction.

3.4.4 Horizontal Lifelines

Design, install, certify and use under the supervision of a qualified person horizontal lifelines for fall protection as part of a complete fall arrest system which maintains a safety factor of 2 (29 CFR 1926.500).

3.4.5 Guardrails and Safety Nets

Design, install and use guardrails and safety nets in accordance with EM 385-1-1 and 29 CFR 1926 Subpart M.

3.4.6 Rescue and Evacuation Procedures

When personal fall arrest systems are used, the contractor must ensure that the mishap victim can self-rescue or can be rescued promptly should a fall occur. Prepare a Rescue and Evacuation Plan and include a detailed discussion of the following: methods of rescue; methods of self-rescue; equipment used; training requirement; specialized training for the rescuers; procedures for requesting rescue and medical assistance; and transportation routes to a medical facility. Include the Rescue and Evacuation Plan within the Activity Hazard Analysis (AHA) for the phase of work, in the Fall Protection and Prevention (FP&P) Plan, and the Accident Prevention Plan (APP).

3.4.7 Fall Prevention During Design Phase

During design phase the Contractor shall consider and eliminate fall hazards encountered during the operation and maintenance evolutions of the facility. If it is not feasible to eliminate or prevent the need to work at heights with its subsequent exposure to fall hazards, control measures should be included in the design to protect personnel conducting maintenance work after completion of the project. In addition to the detailed requirements included in the provisions of this contract, the design work shall incorporate the requirements of 29 CFR 1910 Standards and ASSE/SAFE Z359.0, ASSE/SAFE Z359.1, ASSE/SAFE Z359.2, ASSE/SAFE Z359.3, ASSE/SAFE Z359.4, ASSE/SAFE A1264.1, and NFPA 1.

3.5 SCAFFOLDING

Provide employees with a safe means of access to the work area on the scaffold. Climbing of any scaffold braces or supports not specifically designed for access is prohibited. Access scaffold platforms greater than 20 feet maximum in height by use of a scaffold stair system. Do not use vertical ladders commonly provided by scaffold system manufacturers for accessing scaffold platforms greater than 20 feet maximum in height. The use of an adequate gate is required. Ensure that employees are qualified to perform scaffold erection and dismantling. Do not use scaffold without the capability of supporting at least four times the maximum intended load or without appropriate fall protection as delineated in the accepted fall protection and prevention plan. Stationary scaffolds must be attached to structural building components to safeguard against tipping forward or backward. Give special care to ensure scaffold systems are not overloaded. Side brackets used to extend scaffold platforms on self-supported scaffold systems for the storage of material is prohibited. The first tie-in shall be at the height equal to 4 times the width of the smallest dimension of the scaffold base. Place work platforms on mud sills. Scaffold or work platform erectors shall have fall protection during the erection and dismantling of scaffolding or work platforms that are more than six feet. Delineate fall protection requirements when working above six feet or above dangerous operations in the Fall Protection and Prevention (FP&P) Plan and Activity Hazard Analysis (AHA) for the phase of work.

3.6 EQUIPMENT

3.6.1 Material Handling Equipment

a. Material handling equipment such as forklifts shall not be modified with work platform attachments for supporting employees unless specifically delineated in the manufacturer's printed operating instructions.

b. The use of hooks on equipment for lifting of material must be in accordance with manufacturer's printed instructions. Additionally, when material handling equipment is used as a crane it must meet NAVFAC P-307 requirements in Sections 1.7.2, "Contractor Operated Cranes," and 12, "Investigation and Reporting of Crane and Rigging Gear Accidents."

c. Operators of forklifts or power industrial trucks shall be licensed in accordance with OSHA. Proof of qualifications for operator shall be kept on the project site and addressed as part of the AHA.

3.6.2 Weight Handling Equipment

a. Equip cranes and derricks as specified in EM 385-1-1, section 16.

b. Notify the Contracting Officer 15 days in advance of any cranes entering the activity so that necessary quality assurance spot checks can be coordinated. Prior to cranes entering federal activities, a Crane Access Permit must be obtained from the Contracting Officer. Acopy of the permitting process will be provided at the Preconstruction Conference. Contractor's operator shall remain with the crane during the spot check.

c. Comply with the crane manufacturer's specifications and limitations for erection and operation of cranes and hoists used in support of the work. Perform erection under the supervision of a designated person (as defined in ASME B30.5). Perform all testing in accordance with the manufacturer's recommended procedures.

d. Comply with ASME B30.5 for mobile and locomotive cranes, ASME B30.22 for articulating boom cranes, ASME B30.3 for construction tower cranes, and ASME B30.8 for floating cranes and floating derricks.

e. Under no circumstance shall a Contractor make a lift at or above 90 percent of the crane's rated capacity in any configuration.

f. When operating in the vicinity of overhead transmission lines, operators and riggers shall be alert to this special hazard and follow the requirements of USACE EM 385-1-1 Section 11, NAVFAC P-307 Figure 10-3 and ASME B30.5 or ASME B30.22 as applicable.

g. Do not use crane suspended personnel work platforms (baskets) unless the Contractor proves that using any other access to the work location would provide a greater hazard to the workers or is impossible. Do not lift personnel with a line hoist or friction crane.

h. Inspect, maintain, and recharge portable fire extinguishers as specified in NFPA 10, Standard for Portable Fire Extinguishers.

i. All employees must keep clear of loads about to be lifted and of suspended loads.

j. Use cribbing when performing lifts on outriggers.

k. The crane hook/block must be positioned directly over the load. Side loading of the crane is prohibited.

l. A physical barricade must be positioned to prevent personnel from entering the counterweight swing (tail swing) area of the crane.

m. Certification records which include the date of inspection, signature of the person performing the inspection, and the serial number or other identifier of the crane that was inspected shall always be available for review by Contracting Officer personnel.

n. Written reports listing the load test procedures used along with any repairs or alterations performed on the crane shall be available for review by Contracting Officer personnel.

o. Certify that all crane operators have been trained in proper use of all safety devices (e.g. anti-two block devices).

p. Take steps to ensure that wind speed does not contribute to loss of control of the load during lifting operations. Prior to conducting lifting operations set a maximum wind speed at which a crane can be safely operated based on the equipment being used, the load being lifted, experience of operators and riggers, and hazards on the work site. This maximum wind speed determination shall be included as part of the activity hazard analysis plan for that operation.

3.6.3 Machinery and Mechanized Equipment

a. Proof of qualifications for operator shall be kept on the project site for review.

b. Manufacturer specifications or owner's manual for the equipment shall be on-site and reviewed for additional safety precautions or requirements that are sometimes not identified by OSHA or USACE EM 385-1-1. Incorporate such additional safety precautions or requirements into the AHAs.

c. Machinery & Mechanized Equipment are subject to additional Navy proof of certification. A certification form for acceptance by the Contracting Officer prior to being placed into use may be required.

3.6.4 USE OF EXPLOSIVES

Explosives shall not be used or brought to the project site without prior written approval from the Contracting Officer. Such approval shall not relieve the Contractor of responsibility for injury to persons or for damage to property due to blasting operations.

Storage of explosives, when permitted on Government property, shall be only where directed and in approved storage facilities. These facilities shall be kept locked at all times except for inspection, delivery, and withdrawal of explosives.

3.7 EXCAVATIONS

Soil classification must be performed by a competent person in accordance with 29 CFR 1926 and EM 385-1-1. A competent person for excavation must be on site during all excavation work.

3.7.1 Utility Locations

All underground utilities in the work area must be positively identified by a third party, independent, private utility locating company in addition to any station locating service and coordinated with the station utility department. Any markings made during the utility investigation must be maintained throughout the contract.

3.7.2 Utility Location Verification

Physically verify underground utility locations, including utility depth, by hand digging using wood or fiberglass handled tools when any adjacent construction work is expected to come within three feet of the underground system.

3.7.3 Utilities Within and Under Concrete, Bituminous Asphalt, and Other Impervious Surfaces

Utilities located within and under concrete slabs or pier structures, bridges, parking areas, and the like, are extremely difficult to identify. Whenever contract work involves chipping, saw cutting, or core drilling through concrete, bituminous asphalt or other impervious surfaces, the existing utility location must be coordinated with station utility departments in addition to location and depth verification by a third party, independent, private locating company. The third party, independent, private locating company shall locate utility depth by use of Ground Penetrating Radar (GPR), X-ray, bore scope, or ultrasound prior to the start of demolition and construction. Outages to isolate utility systems must be used in circumstances where utilities are unable to be positively identified. The use of historical drawings does not alleviate the contractor from meeting this requirement.

3.7.4 Location of Underground Utilities

Location and Protection of underground utilities shall be the responsibility of the Contractor. Where existing-to-remain piping, utilities, and underground obstructions of any type are indicated in locations to be traversed by new piping, ducts, and other evacuations, the elevations of the existing utilities and obstructions shall be determined before the new work is completed.

a. In addition, the Contractor shall be responsible for obtaining the services of a professional utility locator prior to digging. Contractor shall provide documentation that the site has been surveyed and checked for underground utilities. All utilities shall be located, including but not limited to power, water, sewer, storm drains, fiber optics, T.V. cable, telephone, and intrusion detection wiring. A set of known utility drawings will be available in the OICC office for review to assist the locator.

b. It is mandatory that the Contractor also contact the Base Telephone Office at (910) 451-2531 prior to accomplishing any digging at Camp Lejeune. A telephone office representative will assist in locating telephone lines.

c. It is mandatory that the Contractor also contact Charter Communications, cable TV service prior to accomplishing any digging at Camp Lejeune, to ensure that all buried cable lines are identified. Contact Mr. Olin Criswell at (910) 353-8677 for assistance.

d. It is mandatory that the Contractor also contact the North Carolina One-Call Center to coordinate the location of underground natural gas infrastructure. North Carolina 811, Inc. can be reached at 811 on a touch-tone phone in the state of North Carolina or toll-free at 1-800-632-4949 if calling from out of state. Work request may also be submitted online at www.nc811.org.

3.7.4.1 The Locations of Underground Utilities

The locations of underground utilities shown are only approximate and the information provided may be incomplete. Contractor shall attempt to ascertain locations of existing underground utilities prior to and during digging operations.

3.7.4.2 Damage to Underground Utilities

Immediate notice shall be delivered to the Contracting Officer of any damage. The Contractor shall make temporary repairs immediately and shall provide permanent repairs as soon as practicable.

3.8 ELECTRICAL

3.8.1 Conduct of Electrical Work

As delineated in EM 385-1-1 electrical work is to be conducted in a de-energized state unless there is no alternative method for accomplishing the work. In those cases an energized work permit shall be obtained from the contracting officer. The energized work permit application shall be accompanied by the AHA and a summary of why the equipment/circuit needs to be worked energized. Underground electrical spaces must be certified safe for entry before entering to conduct work. Cables that will be cut must be positively identified and de-energized prior to performing each cut. Attachment of temporary grounds shall be in accordance with ASTM F855 and IEEE 1048. Perform all high voltage cable cutting remotely using hydraulic cutting tool. When racking in or live switching of circuit breakers, no additional person other than the switch operator will be allowed in the space during the actual operation. Plan so that work near energized parts is minimized to the fullest extent possible. Use of electrical outages clear of any energized electrical sources is the preferred method. When working in energized substations, only qualified electrical workers shall be permitted to enter. When work requires Contractor to work near energized circuits as defined by the NFPA 70, high voltage personnel must use personal protective equipment that includes, as a minimum, electrical hard hat, safety shoes, insulating gloves and electrical arc flash protection for personnel as required by NFPA 70E. Insulating blankets, hearing protection, and switching suits may also be required, depending on the specific job and as delineated in the Contractor's AHA. Contractor shall ensure that each employee is familiar with and complies with these procedures and 29 CFR 1910.147.

3.8.2 Arc Flash Risk/Hazard Analysis

Contractor shall provide an Arc Flash Risk/Hazard Analysis in accordance with NFPA 70E for all locations where workers may be exposed to arc flash hazard (work on energized electrical equipment). The Arc Flash Risk/Hazard Analysis shall be sealed and signed by a qualified professional engineer.

In addition to Arc Flash Risk/Hazard Analysis required for safety during construction, provide an Arc Flash Risk/Hazard Analysis for the entire electrical distribution system as constructed. Provide equipment labels as required by NFPA 70E.

3.8.3 Arc Flash Risk/Hazard Analysis Qualifications

Contractor shall engage the services of a qualified organization to provide Arc Flash Risk/Hazard Analysis of the electrical distribution system. Organization shall be independent of the supplier, manufacturer, and installer of the equipment. The organization shall be a first tier subcontractor. This work shall not be performed by a second tier subcontractor.

a. Submit name and qualifications of organization. Organization shall have been regularly engaged in providing Arc Flash Risk/Hazard Analysis for a minimum of 5 years.

b. Submit name and qualifications of the professional engineer performing the analysis. Include a list of three comparable jobs performed by the engineer with specific names and telephone numbers for reference.

3.8.4 Contractor Electrical Energized Work Permit

All work on energized electrical systems must have an approved/signed Contractor Electrical Energized Work Permit. The results of the Arc Flash Risk/Hazard Analysis shall be included in the "Contractor Electrical Energized Work Permit" request. Flame-resistant (FR) clothing and personal protective equipment (PPE) shall be rated for a minimum of 8 calories per square centimeter even if the flash hazard analysis indicates a lower value. A blank copy of the permit request is attached. An editable version may be obtained from the Contracting Officer.

3.8.5 Portable Extension Cords

Size portable extension cords in accordance with manufacturer ratings for the tool to be powered and protected from damage. Immediately remove from service all damaged extension cords. Portable extension cords shall meet the requirements of EM 385-1-1, NFPA 70E and OSHA electrical standards.

3.9 WORK IN CONFINED SPACES

Comply with the requirements in Section 34 of USACE EM 385-1-1, OSHA 29 CFR 1910, OSHA 29 CFR 1910.146, OSHA Directive CPL 2.100 and OSHA 29 CFR 1926. Any potential for a hazard in the confined space requires a permit system to be used.

a. Entry Procedures. Prohibit entry into a confined space by personnel for any purpose, including hot work, until the qualified person has conducted appropriate tests to ensure the confined or enclosed space is safe for the work intended and that all potential hazards are controlled or eliminated and documented. (See Section 34 of USACE EM 385-1-1 for entry procedures.) All hazards pertaining to the space shall be reviewed with each employee during review of the AHA.

b. Forced air ventilation is required for all confined space entry operations and the minimum air exchange requirements must be maintained to ensure exposure to any hazardous atmosphere is kept below its' action level.

c. Sewer wet wells require continuous atmosphere monitoring with audible alarm for toxic gas detection in addition to continuous forced air ventilation regardless of space classification.

3.10 ERGONOMICS CONSIDERATIONS DURING DESIGN PHASE

Facilities, processes, job tasks, tools and materials shall be designed to reduce or eliminate work-related musculoskeletal (WMSD) injuries and risk factors in the workplace. Designs shall ensure facility maintenance access is designed to reduce WMSD risk factors to the lowest level possible. In addition to the detailed requirements included in the provisions of this contract, the design work shall incorporate the requirements of MIL-STD-1472, DOD HDBK 743A and ANSI/HFES 100.

-- End of Section --

CONTRACTOR ELECTRICAL ENERGIZED WORK PERMIT

PART I: TO BE COMPLETED BY THE REQUESTER: CONTRACT NUMBER: _____

JO/DO NUMBER_____ DATE OF REQUEST: _____

ANTICIPATED DATE WORK IS TO BE PERFORMED: _____.

(1) Description of circuit/equipment/job location:_____

_____

(2) Description of work to be done: _____

_____

(3) Justification of why the circuit/equipment cannot be de-energized or the work deferred until the next scheduled outage:

_____

_____

NOTE: ATTACHED COPY OF OUTAGE REQUESTS INCLUDING REASONS FOR DENIAL

_____ _____

Requester/Title Date

PART II: TO BE COMPLETED BY THE ELECTRICALLY QUALIFIED PERSONS DOING THE WORK:

	Check when Complete
(1) Detailed job description procedure to be used in performing the above detailed work: _____	☐
(2) Description of the Safe Work Practices to be employed: _____	☐
(3) Results of the Shock Hazard Analysis: _____	☐
(4) Determination of the Shock Protection Boundaries: _____	☐
(5) Results of the Arc Flash Hazard Analysis: _____	☐
Determination of the Arc Flash Protection Boundary: _____	☐
(6) Necessary personnel protective equipment to safely perform the assigned task:_____	☐
(7) Means employed to restrict the access of unqualified persons from the work area:_____	☐
(8) Evidence of completion of a Job Briefing including discussion of any job – related hazards:_____	☐

(10) Do you agree the above described work can be done safely? ☐ Yes ☐ No (If no, return to requester)

PART III: RECOMMEND APPROVAL(S) TO PERFORM THE WORK WHILE ELECTRICALLY ENERGIZED:

_____ _____ _____

OICC SIGNATURE **CI SIGNATURE** **OPS SIGNATURE**

_____

NAVFAC MIDLANT CONTRUCTION SAFETY MANAGER

PART IV: FINAL APPROVAL:

_____

NAVFAC MILANT COMMANDING OFFICER

NOTE: COMPLETED FORM WILL BE KEPT ON FILE BY MIDLANT CONSTRUCTION SAFETY MANAGER

CONTRACTOR ELECTRICAL ENERGIZED WORK PERMIT

1. Detailed job description procedure to be used in performing the above detailed work:

2. Description of the Safe Work Practices to be employed

THIS PAGE HAS BEEN INTENTIONALLY LEFT BLANK

SECTION 01 45 00.00 20

QUALITY CONTROL
09/15

PART 1 GENERAL

1.1 REFERENCES

The publications listed below form a part of this specification to the extent referenced. The publications are referred to in the text by the basic designation only.

AMERICAN SOCIETY OF HEATING, REFRIGERATING AND AIR-CONDITIONING ENGINEERS (ASHRAE)

ASHRAE 52.2	(2012) Method of Testing General Ventilation Air-Cleaning Devices for Removal Efficiency by Particle Size

ASTM INTERNATIONAL (ASTM)

ASTM D6245	(2012) Using Indoor Carbon Dioxide Concentrations to Evaluate Indoor Air Quality and Ventilation
ASTM D6345	(2010) Selection of Methods for Active, Integrative Sampling of Volatile Organic Compounds in Air

INTERNATIONAL CODE COUNCIL (ICC)

ICC IBC	(2012) International Building Code

SHEET METAL AND AIR CONDITIONING CONTRACTORS' NATIONAL ASSOCIATION (SMACNA)

ANSI/SMACNA 008	(2007) IAQ Guidelines for Occupied Buildings Under Construction, 2nd Edition

U.S. ARMY CORPS OF ENGINEERS (USACE)

EM 385-1-1	(2014) Safety and Health Requirements Manual

U.S. GREEN BUILDING COUNCIL (USGBC)

LEED GBDC Ref Guide	(2009; R 2010) LEED Reference Guide for Green Building Design, Construction and Major Renovations of Commercial and Institutional Buildings including Core & Shell and K-12 Projects

1.2 SUBMITTALS

Government approval is required for submittals with a "G" designation; submittals not having a "G" designation are for Contractor Quality Control approval. Submit the following in accordance with Section 01 33 00

SUBMITTAL PROCEDURES:

SD-01 Preconstruction Submittals

Construction Quality Control (QC) Plan; G

Submit a Construction QC Plan prior to start of construction.

SD-05 Design Data

SD-06 Test Reports

Acceptance Testing of Critical Systems Checklist

SD-07 Certificates

ICC IBC Special Inspections Certification; G

1.3 INFORMATION FOR THE CONTRACTING OFFICER

Prior to commencing work on construction, the Contractor can obtain a single copy set of the current report forms from the Contracting Officer. The report forms will consist of the Contractor Production Report, Contractor Production Report (Continuation Sheet), Contractor Quality Control (CQC) Report, (CQC) Report (Continuation Sheet), Preparatory Phase Checklist, Initial Phase Checklist, Rework Items List, and Testing Plan and Log.

Deliver the following to the Contracting Officer during Construction:

a. CQC Report: Mail or hand-carry the original (wet signatures) and one copy by 10:00 AM the next working day after each day that work is performed and for every seven consecutive calendar days of no-work.

b. Contractor Production Report: Mail or hand-carry the original (wet signatures) and one copy by 10:00 AM the next working day after each day that work is performed and for every seven consecutive calendar days of no-work, attached to the CQC Report.

c. Preparatory Phase Checklist: Original attached to the original CQC Report and one copy attached to each QC Report copy.

d. Initial Phase Checklist: Original attached to the original CQC Report and one copy attached to each QC Report copy.

e. QC Specialist Reports: Mail or hand-carry the original (wet signatures) and one copy by 10:00 AM the next working day after each day that work is performed.

f. Field Test Reports: Mail or hand-carry the original within two working days after the test is performed, attached to the original CQC Report and one copy attached to each QC Report copy.

g. Monthly Summary Report of Tests: Mail or hand-carry the original attached to the last QC Report of the month.

h. Testing Plan and Log: Mail or hand-carry the original attached to the

last CQC Report of each month and one copy attached to each CQC Report copy. A copy of the final Testing Plan and Log shall be provided to the OMSI preparer for inclusion into the OMSI documentation.

i. Rework Items List: Mail or hand-carry the original attached to the last CQC Report of each month and one copy attached to each CQC Report copy.

j. CQC Meeting Minutes: Mail or hand-carry the original within two working days after the meeting is held, attached to the original CQC Report and one copy attached to each CQC Report copy.

k. QC Certifications: As required by the paragraph entitled "QC Certifications."

1.4 QC PROGRAM REQUIREMENTS

Establish and maintain a QC program as described in this section. This QC program is a key element in meeting the objectives of NAVFAC Commissioning. The QC program consists of a QC Organization, QC Plan, QC Plan Meeting(s), a Coordination and Mutual Understanding Meeting, QC meetings, three phases of control, submittal review and approval, testing, completion inspections, and QC certifications and documentation necessary to provide materials, equipment, workmanship, fabrication, construction and operations which comply with the requirements of this Contract. The QC program must cover on-site and off-site work and be keyed to the work sequence. No construction work or testing may be performed unless the QC Manager is on the work site. The QC Manager must report to an officer of the firm and not be subordinate to the Project Superintendent or the Project Manager. The QC Manager, Project Superintendent and Project Manager must work together effectively. Although the QC Manager is the primary individual responsible for quality control, all individuals will be held responsible for the quality of work on the job.

1.4.1 Commissioning

Commissioning (Cx) is a systematic process of ensuring that all building systems meet the requirements and perform interactively according to the Contract. The QC Program is a key to this process by coordinating, verifying and documenting measures to achieve the following objectives:

a. Verify and document that the applicable equipment and systems are installed in accordance with the design intent as expressed through the Contract and according to the manufacturer's recommendations and industry accepted minimum standards.

b. Verify and document that equipment and systems receive complete operational checkout by the installing contractors.

c. Verify and document proper performance of equipment and systems.

d. Verify that Operation and Maintenance (O&M) documentation is complete.

e. Verify the Training Plan and training materials are accurate and provide correct instruction and documentation on the critical elements of the products, materials, and systems in the constructed facility. Verify that all identified Government operating personnel are trained.

f. Provide acceptance testing for critical systems as identified by

NAVFAC Engineering & Construction Bulletin ECB issue 2008-03 dated 9/25/2008, attached. Provide the requirements identified under the "Ktr" column for all applicable project elements. The requirements identified are minimum requirements and do not reduce the requirements contained in the technical sections. Provide Acceptance Testing of Critical Systems Checklist showing compliance for all applicable elements for approval by the Contracting Officer.

1.4.2 Acceptance of the Construction Quality Control (QC) Plan

Acceptance of the QC Plan is required prior to the start of construction. The Contracting Officer reserves the right to require changes in the QC Plan and operations as necessary, including removal of personnel, to ensure the specified quality of work. The Contracting Officer reserves the right to interview any member of the QC organization at any time in order to verify the submitted qualifications. All QC organization personnel are subject to acceptance by the Contracting Officer. The Contracting Officer may require the removal of any individual for non-compliance with quality requirements specified in the Contract.

1.4.3 Preliminary Construction Work Authorized Prior to Acceptance

The only construction work that is authorized to proceed prior to the acceptance of the QC Plan is mobilization of storage and office trailers, temporary utilities, and surveying.

1.4.4 Notification of Changes

Notify the Contracting Officer, in writing, of any proposed changes in the QC Plan or changes to the QC organization personnel, a minimum of 10 work days prior to a proposed change. Proposed changes are subject to acceptance by the Contracting Officer.

1.5 QC ORGANIZATION

1.5.1 QC Manager

1.5.1.1 Duties

Provide a QC Manager at the work site to implement and manage the QC program. The only duties and responsibilities of the QC Manager are to manage and implement the QC program on this Contract. The QC Manager is required to attend the partnering meetings, QC Plan Meetings, Coordination and Mutual Understanding Meeting, conduct the QC meetings, perform the three phases of control except for those phases of control designated to be performed by QC Specialists, perform submittal review and approval, ensure testing is performed and provide QC certifications and documentation required in this Contract. The QC Manager is responsible for managing and coordinating the three phases of control and documentation performed by the QC Specialists, testing laboratory personnel and any other inspection and testing personnel required by this Contract. The QC Manager is the manager of all QC activities.

1.5.1.2 Qualifications

An individual with a minimum of 5 years combined experience in the following positions: Project Superintendent, QC Manager, Project Manager, Project Engineer or Construction Manager on similar size and type construction contracts which included the major trades that are part of

this Contract. The individual must have at least two years experience as a QC Manager. The individual must be familiar with the requirements of EM 385-1-1, and have experience in the areas of hazard identification, safety compliance, and sustainability.

1.5.2 Construction Quality Management Training

In addition to the above experience and education requirements, the QC Manager must have completed the course entitled "Construction Quality Management (CQM) for Contractors." If the QC Manager does not have a current certification, they must obtain the CQM for Contractors course certification within 90 days of award. This course is periodically offered by the Naval Facilities Engineering Command and the Army Corps of Engineers. Contact the Contracting Officer for information on the next scheduled class.

1.5.3 Alternate QC Manager Duties and Qualifications

Designate an alternate for the QC Manager at the work site to serve in the event of the designated QC Manager's absence. The period of absence may not exceed two weeks at one time, and not more than 30 workdays during a calendar year. The qualification requirements for the Alternate QC Manager must be the same as for the QC Manager.

1.5.4 QC Specialists Duties and Qualifications

Provide a separate QC Specialist at the work site for each of the areas of responsibilities, specified in Part 3, Execution, of the technical sections, who shall assist and report to the QC Manager and who may perform production related duties but must be allowed sufficient time to perform their assigned quality control duties. QC Specialists are required to attend the Coordination and Mutual Understanding Meeting, QC meetings and be physically present at the construction site to perform the three phases of control and prepare documentation for each definable feature of work in their area of responsibility at the frequency specified below.

1.5.4.1 Mechanical QC Specialist

Provide ICC IBC Special Inspections Certification from the following specialist(s):

Qualification/Experience in Area of Responsibility	Area of Responsibility	Frequency
Plumbing Inspector International Conference of Building Officials (ICBO) Certified / 5 Years Minimum	Installation and Testing of Rainwater Reclaimation System	Minimum 2 times a week during installation and full-time during testing
Mechanical Inspector, International Conference of Building Officials (ICBO) Certified/ 5 years minimum	Installation and Testing of Boilers and Chillers	Minimum 3 times a week during installation and full-time during testing and TABs
Certified Elevator Inspector, certified by	Pretesting to ensure safety code,	Once every two weeks during installation,

Qualification/Experience in Area of Responsibility	Area of Responsibility	Frequency
an organization accredited by ASME/ 5 years minimum	specification, and building code complience; provide testing verification report prior to beginning final acceptance test	full time during Pretesting
Registered Mechanical Engineer (PE)/ QC Specialist	Testing of Installed Mechanical Systems	Full time during testing and TABs

1.5.4.2 Soils Testing/Pile Installation and Testing QC Specialists

Provide ICC IBC Special Inspections Certification from the following specialist(s):

Qualification/Experience in Area of Responsibility	Area of Responsibility	Frequency
Registered Engineer (PE) or under the supervision of a (PE)	Soil testing, Pile Installation and Testing	As required in ICC IBC Chapter 17

1.5.4.3 Structural QC Specialists

Provide ICC IBC Special Inspections Certification from the following specialist(s):

Qualification/Experience in Area of Responsibility	Area of Responsibility	Frequency
Registered Engineer (PE) or under the supervision of a (PE)	As required in ICC IBC Chapter 17	As required in ICC IBC Chapter 17

1.5.4.4 Building Envelope QC Specialist

Provide ICC IBC Special Inspections Certification from the following specialist(s):

Qualification/Experience in Area of Responsibility	Area of Responsibility	Frequency
Roofing Manufacturer's Technical Representative/ 5 years minimum with roofing system used.	Installation and Testing of Roofing	Once a week during installation, two times a week during flashing installation and full time during roof testing

1.5.4.5 Electrical and Telecommunications Systems QC Specialists

Provide ICC IBC Special Inspections Certification from the following specialist(s):

Qualification/Experience in Area of Responsibility	Area of Responsibility	Frequency
Electrical Inspector Crew supervision for 10 years minimum Master Electrician licensed in North Carolina	Electrical Systems, All Division 26 Sections, and Division 33 Elec. Sections	Full time during installation and testing all systems
Telecommunications Systems Installation Specialist 10 years minimum experience in telecom-munications systems installation	Telecommunications Systems, All Division 27, 28 Sections and Division 33 Outside Plant(OSP)work	Full time during systems installation and testing

1.6 QUALITY CONTROL (QC) PLAN

1.6.1 Construction Quality Control (QC) Plan

1.6.1.1 Requirements

Provide, for acceptance by the Contracting Officer, a Construction QC Plan submitted in a three-ring binder that includes a table of contents, with major sections identified with tabs, with pages numbered sequentially, and that documents the proposed methods and responsibilities for accomplishing commissioning activities during the construction of the project:

a. QC ORGANIZATION: A chart showing the QC organizational structure.

b. NAMES AND QUALIFICATIONS: Names and qualifications, in resume format, for each person in the QC organization. Include the CQM for Contractors course certifications for the QC Manager and Alternate QC Manager as required by the paragraphs entitled "Construction Quality Management Training" and "Alternate QC Manager Duties and Qualifications".

c. DUTIES, RESPONSIBILITY AND AUTHORITY OF QC PERSONNEL: Duties, responsibilities, and authorities of each person in the QC organization.

d. OUTSIDE ORGANIZATIONS: A listing of outside organizations, such as architectural and consulting engineering firms, that will be employed by the Contractor and a description of the services these firms will provide.

e. APPOINTMENT LETTERS: Letters signed by an officer of the firm appointing the QC Manager and Alternate QC Manager and stating that they are responsible for implementing and managing the QC program as described in this Contract. Include in this letter the responsibility of the QC Manager and Alternate QC Manager to implement and manage the three phases of control, and their authority to stop work which is not in compliance with the Contract. Letters of direction are to be issued by the QC Manager to all other QC Specialists outlining their duties, authorities, and responsibilities. Include copies of the letters in the QC Plan.

f. SUBMITTAL PROCEDURES AND INITIAL SUBMITTAL REGISTER: Procedures for reviewing, approving, and managing submittals. Provide the name(s) of

the person(s) in the QC organization authorized to review and certify submittals prior to approval. Provide the initial submittal of the Submittal Register as specified in Section 01 33 00 SUBMITTAL PROCEDURES.

g. TESTING LABORATORY INFORMATION: Testing laboratory information required by the paragraphs entitled "Accreditation Requirements", as applicable.

h. TESTING PLAN AND LOG: A Testing Plan and Log that includes the tests required, referenced by the specification paragraph number requiring the test, the frequency, and the person responsible for each test. Use Government forms to log and track tests.

i. PROCEDURES TO COMPLETE REWORK ITEMS: Procedures to identify, record, track, and complete rework items. Use Government forms to record and track rework items.

j. DOCUMENTATION PROCEDURES: Use Government form.

k. LIST OF DEFINABLE FEATURES: A Definable Feature of Work (DFOW) is a task that is separate and distinct from other tasks and has control requirements and work crews unique to that task. A DFOW is identified by different trades or disciplines and is an item or activity on the construction schedule. Include in the list of DFOWs, but not be limited to, all critical path activities on the NAS. Include all activities for which this specification requires QC Specialists or specialty inspection personnel. Provide separate DFOWs in the Network Analysis Schedule for each design development stage and submittal package.

l. PROCEDURES FOR PERFORMING THE THREE PHASES OF CONTROL: Identify procedures used to ensure the three phases of control to manage the quality on this project. For each DFOW, a Preparatory and Initial phase checklist will be filled out during the Preparatory and Initial phase meetings. Conduct the Preparatory and Initial Phases and meetings with a view towards obtaining quality construction by planning ahead and identifying potential problems for each DFOW.

m. PERSONNEL MATRIX: Not Applicable

n. PROCEDURES FOR COMPLETION INSPECTION: Procedures for identifying and documenting the completion inspection process. Include in these procedures the responsible party for punch out inspection, pre-final inspection, and final acceptance inspection.

o. TRAINING PROCEDURES AND TRAINING LOG: Procedures for coordinating and documenting the training of personnel required by the Contract.

p. ORGANIZATION AND PERSONNEL CERTIFICATIONS LOG: Procedures for coordinating, tracking and documenting all certifications on subcontractors, testing laboratories, suppliers, personnel, etc. QC Manager will ensure that certifications are current, appropriate for the work being performed, and will not lapse during any period of the contract that the work is being performed.

1.7 QC PLAN MEETINGS

Prior to submission of the QC Plan, the QC Manager will meet with the

Contracting Officer to discuss the QC Plan requirements of this Contract. The purpose of this meeting is to develop a mutual understanding of the QC Plan requirements prior to plan development and submission and to agree on the Contractor's list of DFOWs.

1.8 COORDINATION AND MUTUAL UNDERSTANDING MEETING

After submission of the QC Plan, and prior to the start of construction, the QC Manager will meet with the Contracting Officer to present the QC program required by this Contract. When a new QC Manager is appointed, the coordination and mutual understanding meeting shall be repeated.

1.8.1 Purpose

The purpose of this meeting is to develop a mutual understanding of the QC details, including documentation, administration for on-site and off-site work, design intent, Cx, environmental requirements and procedures, coordination of activities to be performed, and the coordination of the Contractor's management, production, and QC personnel. At the meeting, the Contractor will be required to explain in detail how three phases of control will be implemented for each DFOW, as well as how each DFOW will be affected by each management plan or requirement as listed below:

a. Waste Management Plan.

b. IAQ Management Plan.

c. Procedures for noise and acoustics management.

d. Environmental Protection Plan.

e. Environmental regulatory requirements.

f. Cx Plan.

1.8.2 Coordination of Activities

Coordinate activities included in various sections to assure efficient and orderly installation of each component. Coordinate operations included under different sections that are dependent on each other for proper installation and operation. Schedule construction operations with consideration for indoor air quality as specified in the IAQ Management Plan. Coordinate prefunctional tests and startup testing with Cx.

1.8.3 Attendees

As a minimum, the Contractor's personnel required to attend include an officer of the firm, the Project Manager, Project Superintendent, QC Manager, Alternate QC Manager, QC Specialists, A/E, CA, Environmental Manager, and subcontractor representatives. Each subcontractor who will be assigned QC responsibilities shall have a principal of the firm at the meeting. Minutes of the meeting will be prepared by the QC Manager and signed by the Contractor and the Contracting Officer. Provide a copy of the signed minutes to all attendees and include in the QC Plan.

1.9 QC MEETINGS

After the start of construction, conduct QC meetings once every two weeks by the QC Manager at the work site with the Project Superintendent, QC

Specialists, the CA, and the foremen who are performing the work of the DFOWs. The QC Manager is to prepare the minutes of the meeting and provide a copy to the Contracting Officer within two working days after the meeting. The Contracting Officer may attend these meetings. As a minimum, accomplish the following at each meeting:

a. Review the minutes of the previous meeting.

b. Review the schedule and the status of work and rework.

c. Review the status of submittals.

d. Review the work to be accomplished in the next two weeks and documentation required.

e. Resolve QC and production problems (RFI, etc.).

f. Address items that may require revising the QC Plan.

g. Review Accident Prevention Plan (APP).

h. Review environmental requirements and procedures.

i. Review Waste Management Plan.

j. Review IAQ Management Plan.

k. Review Environmental Management Plan.

l. Review the status of training completion.

m. Review Cx Plan and progress.

1.10 DESIGN REVIEW AND DOCUMENTATION

1.10.1 Contract Document Review

Review the Contract documents to verify that Cx is adequately specified, and that each commissioned system is likely to meet the design intent relative to functionality, energy performance, water performance, maintainability, sustainability, system cost, indoor environmental quality, and local environmental impacts.

1.11 THREE PHASES OF CONTROL

Adequately cover both on-site and off-site work with the Three Phases of Control and include the following for each DFOW.

1.11.1 Preparatory Phase

Notify the Contracting Officer at least two work days in advance of each preparatory phase meeting. The meeting will be conducted by the QC Manager and attended by the QC Specialists, the Project Superintendent, the CA, and the foreman responsible for the DFOW. When the DFOW will be accomplished by a subcontractor, that subcontractor's foreman shall attend the preparatory phase meeting. Document the results of the preparatory phase actions in the daily Contractor Quality Control Report and in the Preparatory Phase Checklist. Perform the following prior to beginning work on each DFOW:

a. Review each paragraph of the applicable specification sections.

b. Review the Contract drawings.

c. Verify that field measurements are as indicated on construction and/or shop drawings before confirming product orders, in order to minimize waste due to excessive materials.

d. Verify that appropriate shop drawings and submittals for materials and equipment have been submitted and approved. Verify receipt of approved factory test results, when required.

e. Review the testing plan and ensure that provisions have been made to provide the required QC testing.

f. Examine the work area to ensure that the required preliminary work has been completed.

g. Coordinate the schedule of product delivery to designated prepared areas in order to minimize site storage time and potential damage to stored materials.

h. Arrange for the return of shipping/packaging materials, such as wood pallets, where economically feasible.

i. Examine the required materials, equipment and sample work to ensure that they are on hand and conform to the approved shop drawings and submitted data.

j. Discuss specific controls used and construction methods, construction tolerances, workmanship standards, and the approach that will be used to provide quality construction by planning ahead and identifying potential problems for each DFOW.

k. Review the APP and appropriate Activity Hazard Analysis (AHA) to ensure that applicable safety requirements are met, and that required Material Safety Data Sheets (MSDS) are submitted.

l. Review the Cx Plan and ensure all preliminary work items have been completed and documented.

1.11.2 Initial Phase

Notify the Contracting Officer at least two work days in advance of each initial phase. When construction crews are ready to start work on a DFOW, conduct the initial phase with the QC Specialists, the Project Superintendent, and the foreman responsible for that DFOW. Observe the initial segment of the DFOW to ensure that the work complies with Contract requirements. Document the results of the initial phase in the daily CQC Report and in the Initial Phase Checklist. Repeat the initial phase for each new crew to work on-site, or when acceptable levels of specified quality are not being met. Perform the following for each DFOW:

a. Establish the quality of workmanship required.

b. Resolve conflicts.

c. Ensure that testing is performed by the approved laboratory.

d. Check work procedures for compliance with the APP and the appropriate AHA to ensure that applicable safety requirements are met.

e. Review the Cx Plan and ensure all preparatory work items have been completed and documented.

1.11.3 Follow-Up Phase

Perform the following for on-going work daily, or more frequently as necessary, until the completion of each DFOW and document in the daily CQC Report:

a. Ensure the work is in compliance with Contract requirements.

b. Maintain the quality of workmanship required.

c. Ensure that testing is performed by the approved laboratory.

d. Ensure that rework items are being corrected.

e. Assure manufacturers representatives have performed necessary inspections if required and perform safety inspections.

f. Review the Cx Plan and ensure all work items, testing, and documentation has been completed.

1.11.4 Additional Preparatory and Initial Phases

Conduct additional preparatory and initial phases on the same DFOW if the quality of on-going work is unacceptable, if there are changes in the applicable QC organization, if there are changes in the on-site production supervision or work crew, if work on a DFOW is resumed after substantial period of inactivity, or if other problems develop.

1.11.5 Notification of Three Phases of Control for Off-Site Work

Notify the Contracting Officer at least two weeks prior to the start of the preparatory and initial phases.

1.12 SUBMITTAL REVIEW AND APPROVAL

Procedures for submission, review and approval of submittals are described in Section 01 33 00 SUBMITTAL PROCEDURES.

1.13 TESTING

Except as stated otherwise in the specification sections, perform sampling and testing required under this Contract.

1.13.1 Accreditation Requirements

Construction materials testing laboratories must be accredited by a laboratory accreditation authority and will be required to submit a copy of the Certificate of Accreditation and Scope of Accreditation. The laboratory's scope of accreditation must include the appropriate ASTM standards (E 329, C 1077, D 3666, D 3740, A 880, E 543) listed in the technical sections of the specifications. Laboratories engaged in Hazardous Materials Testing shall meet the requirements of OSHA and EPA.

The policy applies to the specific laboratory performing the actual testing, not just the Corporate Office.

1.13.2 Laboratory Accreditation Authorities

Laboratory Accreditation Authorities include the National Voluntary Laboratory Accreditation Program (NVLAP) administered by the National Institute of Standards and Technology at http://ts.nist.gov/ts/htdocs/210/214/214.htm , the American Association of State Highway and Transportation Officials (AASHTO) program at http://www.transportation.org/aashto/home.nsf/frontpage , International Accreditation Services, Inc. (IAS) at http://www.iasonline.org, U. S. Army Corps of Engineers Materials Testing Center (MTC)at http://www.wes.army.mil/SL/MTC/, the American Association for Laboratory Accreditation (A2LA) program at http://www.a2la.org/, the Washington Association of Building Officials (WABO) at http://www.wabo.org/ (Approval authority for WABO is limited to projects within Washington State), and the Washington Area Council of Engineering Laboratories (WACEL) at http://www.wacel.org/labaccred.html (Approval authority by WACEL is limited to projects within Facilities Engineering Command (FEC) Washington geographical area).

1.13.3 Capability Check

The Contracting Officer retains the right to check laboratory equipment in the proposed laboratory and the laboratory technician's testing procedures, techniques, and other items pertinent to testing, for compliance with the standards set forth in this Contract.

1.13.4 Test Results

Cite applicable Contract requirements, tests or analytical procedures used. Provide actual results and include a statement that the item tested or analyzed conforms or fails to conform to specified requirements. If the item fails to conform, notify the Contracting Officer immediately. Conspicuously stamp the cover sheet for each report in large red letters "CONFORMS" or "DOES NOT CONFORM" to the specification requirements, whichever is applicable. Test results must be signed by a testing laboratory representative authorized to sign certified test reports. Furnish the signed reports, certifications, and other documentation to the Contracting Officer via the QC Manager. Furnish a summary report of field tests at the end of each month, per the paragraph entitled "INFORMATION FOR THE CONTRACTING OFFICER".

1.13.5 Test Reports and Monthly Summary Report of Tests

Furnish the signed reports, certifications, and a summary report of field tests at the end of each month to the Contracting Officer. Attach a copy of the summary report to the last daily Contractor Quality Control Report of each month. Provide a copy of the signed test reports and certifications to the OMSI preparer for inclusion into the OMSI documentation.

1.14 QC CERTIFICATIONS

1.14.1 CQC Report Certification

Contain the following statement within the CQC Report: "On behalf of the Contractor, I certify that this report is complete and correct and

equipment and material used and work performed during this reporting period is in compliance with the contract drawings and specifications to the best of my knowledge, except as noted in this report."

1.14.2 Invoice Certification

Furnish a certificate to the Contracting Officer with each payment request, signed by the QC Manager, attesting that as-built drawings are current, coordinated and attesting that the work for which payment is requested, including stored material, is in compliance with Contract requirements.

1.14.3 Completion Certification

Upon completion of work under this Contract, the QC Manager shall furnish a certificate to the Contracting Officer attesting that "the work has been completed, inspected, tested and is in compliance with the Contract." Provide a copy of this final QC Certification for completion to the OMSI preparer for inclusion into the OMSI documentation.

1.15 COMPLETION INSPECTIONS

1.15.1 Punch-Out Inspection

Near the completion of all work or any increment thereof, established by a completion time stated in the Contract Clause entitled "Commencement, Prosecution, and Completion of Work," or stated elsewhere in the specifications, the QC Manager and the CA must conduct an inspection of the work and develop a "punch list" of items which do not conform to the approved drawings, specifications and Contract. Include in the punch list any remaining items on the "Rework Items List", which were not corrected prior to the Punch-Out Inspection. Include within the punch list the estimated date by which the deficiencies will be corrected. Provide a copy of the punch list to the Contracting Officer. The QC Manager, or staff, must make follow-on inspections to ascertain that all deficiencies have been corrected. Once this is accomplished, notify the Government that the facility is ready for the Government "Pre-Final Inspection".

1.15.2 Pre-Final Inspection

The Government and QCM will perform this inspection to verify that the facility is complete and ready to be occupied. A Government "Pre-Final Punch List" will be documented by the CQM as a result of this inspection. The QC Manager will ensure that all items on this list are corrected prior to notifying the Government that a "Final" inspection with the Client can be scheduled. Any items noted on the "Pre-Final" inspection must be corrected in a timely manner and be accomplished before the contract completion date for the work,or any particular increment thereof, if the project is divided into increments by separate completion dates.

1.15.3 Final Acceptance Inspection

Notify the Contracting Officer at least 14 calendar days prior to the date a final acceptance inspection can be held. State within the notice that all items previously identified on the pre-final punch list will be corrected and acceptable, along with any other unfinished Contract work, by the date of the final acceptance inspection. The Contractor must be represented by the QC Manager, the Project Superintendent, the CA, and others deemed necessary. Attendees for the Government will include the

Contracting Officer, other FEAD/ROICC personnel, and personnel representing the Client. Failure of the Contractor to have all contract work acceptably complete for this inspection will be cause for the Contracting Officer to bill the Contractor for the Government's additional inspection cost in accordance with the Contract Clause entitled "Inspection of Construction."

1.16 DOCUMENTATION

Maintain current and complete records of on-site and off-site QC program operations and activities.

1.16.1 Construction Documentation

Reports are required for each day that work is performed and must be attached to the Contractor Quality Control Report prepared for the same day. Maintain current and complete records of on-site and off-site QC program operations and activities. The forms identified under the paragraph "INFORMATION FOR THE CONTRACTING OFFICER" will be used. Reports are required for each day work is performed. Account for each calendar day throughout the life of the Contract. Every space on the forms must be filled in. Use N/A if nothing can be reported in one of the spaces. The Project Superintendent and the QC Manager must prepare and sign the Contractor Production and CQC Reports, respectively. The reporting of work must be identified by terminology consistent with the construction schedule. In the "remarks" sections of the reports, enter pertinent information including directions received, problems encountered during construction, work progress and delays, conflicts or errors in the drawings or specifications, field changes, safety hazards encountered, instructions given and corrective actions taken, delays encountered and a record of visitors to the work site, quality control problem areas, deviations from the QC Plan, construction deficiencies encountered, meetings held. For each entry in the report(s), identify the Schedule Activity No. that is associated with the entered remark.

1.16.2 Quality Control Validation

Establish and maintain the following in a series of three ring binders. Binders shall be divided and tabbed as shown below. These binders must be readily available to the Contracting Officer during all business hours.

a. All completed Preparatory and Initial Phase Checklists, arranged by specification section.

b. All milestone inspections, arranged by Activity Number.

c. An up-to-date copy of the Testing Plan and Log with supporting field test reports, arranged by specification section.

d. Copies of all contract modifications, arranged in numerical order. Also include documentation that modified work was accomplished.

e. An up-to-date copy of the Rework Items List.

f. Maintain up-to-date copies of all punch lists issued by the QC staff to the Contractor and Sub-Contractors and all punch lists issued by the Government.

g. Commissioning documentation including Cx checklists, schedules, tests,

and reports.

1.16.3 Reports from the QC Specialist(s)

Reports are required for each day that work is performed in their area of responsibility. QC Specialist reports shall include the same documentation requirements as the CQC Report for their area of responsibility. QC Specialist reports are to be prepared, signed and dated by the QC Specialists and shall be attached to the CQC Report prepared for the same day.

1.16.4 Testing Plan and Log

As tests are performed, the CA and the QC Manager will record on the "Testing Plan and Log" the date the test was performed and the date the test results were forwarded to the Contracting Officer. Attach a copy of the updated "Testing Plan and Log" to the last daily CQC Report of each month, per the paragraph "INFORMATION FOR THE CONTRACTING OFFICER". Provide a copy of the final "Testing Plan and Log" to the OMSI preparer for inclusion into the OMSI documentation.

1.16.5 Rework Items List

The QC Manager must maintain a list of work that does not comply with the Contract, identifying what items need to be reworked, the date the item was originally discovered, the date the item will be corrected by, and the date the item was corrected. There is no requirement to report a rework item that is corrected the same day it is discovered. Attach a copy of the "Rework Items List" to the last daily CQC Report of each month. The Contractor is responsible for including those items identified by the Contracting Officer.

1.16.6 As-Built Drawings

The QC Manager is required to ensure the as-built drawings, required by Section 01 78 00 CLOSEOUT SUBMITTALS are kept current on a daily basis and marked to show deviations which have been made from the Contract drawings. Ensure each deviation has been identified with the appropriate modifying documentation (e.g. PC No., Modification No., Request for Information No., etc.). The QC Manager or QC Specialist assigned to an area of responsibility must initial each revision. Upon completion of work, the QC Manager will furnish a certificate attesting to the accuracy of the as-built drawings prior to submission to the Contracting Officer.

1.17 NOTIFICATION ON NON-COMPLIANCE

The Contracting Officer will notify the Contractor of any detected non-compliance with the Contract. Take immediate corrective action after receipt of such notice. Such notice, when delivered to the Contractor at the work site, shall be deemed sufficient for the purpose of notification. If the Contractor fails or refuses to comply promptly, the Contracting Officer may issue an order stopping all or part of the work until satisfactory corrective action has been taken. No part of the time lost due to such stop orders will be made the subject of claim for extension of time for excess costs or damages by the Contractor.

1.18 CONSTRUCTION INDOOR AIR QUALITY (IAQ) MANAGEMENT PLAN

1.18.1 Requirements During Construction

Provide for evaluation of indoor Carbon Dioxide concentrations in accordance with ASTM D6245. Provide for evaluation of volatile organic compounds (VOCs) in indoor air in accordance with ASTM D6345. Use filters with a Minimum Efficiency Reporting Value (MERV) of 8 in permanently installed air handlers during construction.

1.18.1.1 Control Measures

Meet or exceed the requirements of ANSI/SMACNA 008, Chapter 3, to help minimize contamination of the building from construction activities. The five requirements of this manual which must be adhered to are described below:

a. HVAC protection: Isolate return side of HVAC system from surrounding environment to prevent construction dust and debris from entering the duct work and spaces.

b. Source control: Use low emitting paints and other finishes, sealants, adhesives, and other materials as specified. When available, cleaning products shall have a low VOC content and be non-toxic to minimize building contamination. Utilize cleaning techniques that minimize dust generation. Cycle equipment off when not needed. Prohibit idling motor vehicles where emissions could be drawn into building. Designate receiving/storage areas for incoming material that minimize IAQ impacts.

c. Pathway interruption: When pollutants are generated use strategies such as 100 percent outside air ventilation or erection of physical barriers between work and non-work areas to prevent contamination.

d. Housekeeping: Clean frequently to remove construction dust and debris. Promptly clean up spills. Remove accumulated water and keep work areas dry to discourage the growth of mold and bacteria. Take extra measures when hazardous materials are involved.

e. Scheduling: Control the sequence of construction to minimize the absorption of VOCs by other building materials.

1.18.1.2 Moisture Contamination

a. Remove accumulated water and keep work dry.

b. Use dehumidification to remove moist, humid air from a work area.

c. Do not use combustion heaters or generators inside the building.

d. Protect porous materials from exposure to moisture.

e. Remove and replace items which remain damp for more than a few hours.

1.18.2 Requirements after Construction

After construction ends and prior to occupancy, conduct a building flush-out or test the indoor air contaminant levels. Flush-out must be a minimum two-weeks with MERV-13 filtration media as determined by ASHRAE 52.2at 100 percent outside air, or in accordance with LEED GBDC Ref Guide. Air contamination testing must be consistent with EPA's current Compendium of Methods for the Determination of Air

Pollutants in Indoor Air, and with the LEED GBDC Ref Guide. After building flush-out or testing and prior to occupancy, replace filtration media. Filtration media must have a MERV of 13 as determined by ASHRAE 52.2.

PART 2 PRODUCTS

Not Used.

PART 3 EXECUTION

3.1 PREPARATION

Designate receiving/storage areas for incoming material to be delivered according to installation schedule and to be placed convenient to work area in order to minimize waste due to excessive materials handling and misapplication. Store and handle materials in a manner as to prevent loss from weather and other damage. Keep materials, products, and accessories covered and off the ground, and store in a dry, secure area. Prevent contact with material that may cause corrosion, discoloration, or staining. Protect all materials and installations from damage by the activities of other trades.

-- End of Section --

CAPITAL IMPROVEMENTS

ENGINEERING & CONSTRUCTION Bulletin

Issue No. 2008-03 **25 September 2008** **Type: Policy**

Subject: **Acceptance Testing of Critical Systems**

Reference: (a) ECB 2007-01 Proper use of Military Construction Funds, 13 October 2006

Enclosure: (1) Roles and Responsibilities (R&R) Matrices

Cancelled: NAVFAC Instruction 12271.1: NAVFAC Total Building Commissioning Policy, dated 23 October 2003

1. Purpose.

To focus NAVFAC's technical oversight of acceptance testing during construction on five critical areas (electrical, fire and life safety, mechanical, roofing, and underwater structures) to ensure the constructed facility performs as intended and meets the needs of the supported commands; to define the use of Post Construction Award Services (PCAS) funding as it applies to the Capital Improvements Business Line (CIBL) in-house acceptance testing and technical support efforts.

2. Background.

NAVFAC has identified five critical areas that have consistently caused problems in facilities delivered to its supported commands. These areas are electrical, fire and life safety, mechanical, roofing systems, and underwater structures. These five critical areas were identified as requiring ongoing, thorough construction technical oversight in support of acceptance testing. A NAVFAC Team of technical experts determined how to apply responsible oversight to these five critical areas using one-half of PCAS funds. Each Team compiled all systems / sub-systems and developed R&R matrices (enclosure (1)). Each matrix identifies responsibilities of each of the contributors to the quality and functionality of the completed project, including the contractor, Facilities Engineering Command's (FEC) Integrated Product Team (IPT) and Facilities Engineering and Acquisition Division (FEAD) technical staff. The matrices served as the basis for determining the level of effort (man hours) to perform the technical support for acceptance testing. The following table shows the format in the R&R matrices. Each heading is provided with a description of each column's intent:

System	Sub-System	Phase	Element	Ktr QC-DOR (Project Req'ts)	FEAD (SIOH)	FEC (PCAS)
Major system grouping	Specific system	Phase of the project where it will occur	The item or task to be accomplished	What actions, if any, need to be taken by the appropriate party? (Indicates funding method)		

The contractor is still responsible for delivering a high quality and properly functioning facility via the Contractor Quality Control (CQC) program and commissioning process (including documentation and training).

3. Policy and Implementation.

The following will apply to the performance of acceptance testing for the five critical areas:

a. This applies to Military Construction (MILCON) and all Special Projects with costs over $750,000 for design-build and design-bid-build contracts.
b. The Project Manager (PM) shall manage, in coordination with the Construction Manager (CM), the project PCAS funds. The PM shall ensure that PCAS funding is used in accordance with reference (a).
c. The average funds available to support the CIBL acceptance testing in-house effort will be one-half the total PCAS funds.
d. Enclosure (1) defines the roles and responsibilities of the contractor, FEC's IPT and FEAD technical staff.
e. While the FEAD will be responsible for managing the overall construction project, the FEC's IPT will be responsible for the technical support for the acceptance testing effort associated with the five critical areas. Technical support from the FEAD can be leveraged as capabilities and resources allow, and must be coordinated between the FEC IPT and FEAD. The support for the five critical areas will be provided by engineers that have been trained and are experienced in that area.
f. The CM will manage the day-to-day coordination with the contractor and coordinate the necessary reach back to the FEC IPT for technical support for acceptance testing.
g. PCAS must be budgeted and included in the project costs. The PCAS costs must be shown in the budget estimate summary sheets (BESS) on the DD 1391.
h. The Public Works Business Line (PWBL) has agreed to designate representatives who are responsible for facility maintenance and sustainment to perform the following:
    i. Participate in the submittal review process by providing comments on submittals for the critical areas.
    ii. Be present for the final inspections and tests.
    iii. Be present for all system training.
    iv. Provide feedback and lessons learned to the FEC CI4.
i. It is recommended that the designated representatives, who are responsible for maintenance and sustainment visit the site during construction to become familiar with the building systems.
j. The efforts in paragraph 3.h above will not be funded using PCAS or supervision, inspection and overhead (SIOH).

JOSEPH E. GOTT, P.E.
Chief Engineer and Director,
Capital Improvements

Note: This ECB has been coordinated with Headquarters, U.S. Marine Corps (Code LFF).

ELECTRICAL ENGINEERING ROLES and RESPONSIBILITIES

System	Sub-Systems	Phase	Elements	EE QC / DOR (Ktr)	FEAD (SIOH)	FEC (PCAS)
All Systems	**Submittals & Plans**	Pre-Construction	Qualifications of Installer, Shop Drawings, Data Sheets, and Calculations (as applicable)	A	C	S
			QC Plan		A	S
			Performance Verification Plan		A	S
	Certificates & Reports	Construction	Functional Acceptance Test Procedure	A	C	S
			Preliminary Test Reports	A	RA	S
			Final Acceptance Test Reports	A	C	S
Power Generators	**Single Operation Generator Sets**	Test Preparation	Perform fuel oil piping tests	V	C	-
			Perform acceptance checks and tests	V	W	C
			Perform preliminary operations	V	W	C
		Final Test	Test all engine protective shutdown devices	V	—	W
			Test all pre-shutdown alarm devices	V	—	W
			Test crank cycle/terminate relay	V	—	W
			Test automatic and manual operations in all possible scenarios involving loss of utility, return of utility, manual starting, and emergency stop	V	—	W
			Perform load test	V	—	W
	Automatic Transfer Switches	Test Preparation	Perform acceptance checks and tests	V	W	C
		Final Test	Simulate loss of normal power	—	—	W
			Simulate return of normal power	V	—	W
			Simulate loss of emergency power	V	—	W
			Simulate all forms of single-phase conditions	V	—	W
			Verify operation of normal power voltage-sensing relays	V	—	W
			Verify engine start sequence	V	—	W
			Verify time delay upon transfer	V	—	W
			Verify operation of alternate power voltage-sensing relays	V	—	W
			Verify automatic transfer operation	V	—	W
			Verify interlocks and limit switch operation	V	—	W
			Verify time delay and retransfer upon normal power restoration	V	—	W
400-Hertz Solid State Frequency Converter	**All**	Test Preparation	Perform acceptance checks and tests	V	W	C
			Verify equipment nameplate information with specifications and approved shop drawings	V	W	—
			Inspect physical and mechanical condition	V	W	—
			Verify correct equipment grounding	V	W	—
			Perform resistance measurements through all bolted connections	V	W	—
			Perform preliminary operations	V	W	C
		Final Test	Test all control devices	V	—	W
			Test all protective shutdown devices	V	—	W
			Perform load test	V	—	W
			Perform transient tests	V	—	W
			Perform harmonic distortion tests	V	—	W
			Perform automatic line drop compensation test	V	—	W

KEY = A - Approve, R - Review, W - Witness, RA - Receipt Acknowledge, S - Surveilance Review, V- Verification and Testing, C - Copy, QA - Quality Assurance

ELECTRICAL ENGINEERING ROLES and RESPONSIBILITIES

System	Sub-Systems	Phase	Elements	EE QC / DOR (Ktr)	FEAD (SIOH)	FEC (PCAS)
Uninterruptible Power Supply (UPS)	**All**	Test Preparation	Verify ventilation equipment in UPS and battery rooms are operational	V	W	—
			Verify battery cells are filled with electrolyte	V	W	—
			Verify polarity of DC connections and phase rotation of AC connections	V	W	—
			Verify AC power to all equipment	V	W	—
			Verify remote monitors and control wiring	V	W	—
			Verify UPS system and battery system is properly grounded	V	W	—
			Verify operation of emergency shower and eye wash	V	W	—
			Verify control connections between UPS and emergency engine generator signal contacts	V	W	—
			Verify control connections between UPS module and UPS maintenance bypass cabinet	V	W	—
			Perform acceptance checks and tests	V	W	C
		Final Test	Perform load tests	V	—	W
			Perform full-load burn in test	V	—	W
			Perform battery discharge test	V	—	W
			Perform battery performance test	V	—	W
			Perform UPS in conjunction with emergency generator service (if applicable)	V	—	W
Lighting	**Interior Lighting**	Final Test	Verify electronic dimming ballasts operatation over full range of dimming capability without any visually detectable flicker	V	W	—
			Verify occupancy sensors operation	V	W	—
			Verify lighting controls operation	V	W	—
			Verify lighting output levels	V	W	—
	Exterior Lighting	Final Test	Verify photocell aiming and operation	V	W	—
			Verify lighting controls operation	V	W	—
			Verify lighting output levels	V	W	—
Transformers	**Single-Phase Pad-Mounted Transformers**	Factory Routine Tests	Perform resistance measurements, polarity, ratio, no-load losses and excitation current, load losses and impedance voltage, dielectric, leak (liquid-filled), and disolved gas analysis (liquid-filled) tests	—	—	W
		Field Tests	Perform acceptance checks and tests	V	W	C
	Three-Phase Pad-Mounted Transformers	Factory Routine Tests	Perform resistance measurements, polarity, ratio, no-load losses and excitation current, load losses and impedance voltage, dielectric, leak (liquid-filled), and disolved gas analysis (liquid-filled) tests	—	—	W
		Field Tests	Perform acceptance checks and tests	V	W	C
	Secondary Unit Substations	Factory Routine Tests	Perform resistance measurements, polarity, ratio, no-load losses and excitation current, load losses and impedance voltage, and dielectric tests	—	—	W
		Field Tests	Perform acceptance checks and tests	V	W	C
	Primary Unit Substations	Factory Routine Tests	Perform resistance measurements, polarity, ratio, no-load losses and excitation current, load losses and impedance voltage, dielectric, leak (liquid-filled), and disolved gas analysis (liquid-filled) tests	—	—	W
		Field Tests	Perform acceptance checks and tests	V	W	C

KEY = A - Approve, R - Review, W - Witness, RA - Receipt Acknowledge, S - Surveilance Review, V- Verification and Testing, C - Copy, QA - Quality Assurance

ELECTRICAL ENGINEERING ROLES and RESPONSIBILITIES

System	Sub-Systems	Phase	Elements	EE QC / DOR (Ktr)	FEAD (SIOH)	FEC (PCAS)
Switchgear/ Switchboards	**Metal-Clad Switchgear / Switchboards and Busway**	Factory Production Tests	60 Hz dielectric, mechanical operation, electrical operation and control wiring, and ground fault sensing equipment tests	—	—	W
		Test Preparation	Perform acceptance checks and tests	V	W	C
Cable	**Medium-Voltage Cable, Terminations, and Splices**	Test Preparation	Perform acceptance checks and tests	V	W	—
		Field Tests	Perform shield continuity and very low frequency (VLF) tests	V	W	—
SF6 Switch - Padmount	**Medium Voltage Pad-mounted Switches**	Factory Production Tests	60 Hz dielectric, mechanical operation, electrical operation and control wiring, and ground fault sensing equipment tests	—	—	W
		Test Preparation	Perform acceptance checks and tests	V	W	C
Airfield Lighting	**Airfield Lighting Circuits**	Field Tests	Airfield lighting circuits low voltage continuity and high voltage insulation resistance tests	V	W	—
		Field Tests	Airfield lighting circuit operating test	V	W	—
	Counterpoise	Field Tests	Counterpoise system test	V	W	—
	Constant	Field Tests	Perform open circuit protector and load tests	V	W	—
	All	Field Tests	Perform airfield lighting system operation test	V	W	—
Cathodic Protection	**Cathodic Protection by Galvanic Anodes**	Field Tests	Perform non-destructive testing of anodes	V	W	—
			Perform destructive testing of anodes	V	W	—
			Perform base potential tests, insulation joint testing, electrical continuity testing, pipe casing testing, anode-to-soil potential tests, anode output tests, protected potential measurement tests, and interference testing.	V	W	—
			Perform field operation tests.	V	—	W
	Cathodic Protection by Impressed Current	Field Tests	Perform non-destructive testing of anodes	V	W	—
			Perform destructive testing of anodes	V	W	—
			Perform base potential tests, permanent reference electrode calibration, insulation joint testing, electrical continuity testing, rectifier system testing, pipe casing testing, protected potential measurement tests, and interference testing.	V	W	—
			Perform field operation tests.	V	—	W

KEY = A - Approve, R - Review, W - Witness, RA - Receipt Acknowledge, S - Surveilance Review, V- Verification and Testing, C - Copy, QA - Quality Assurance

FIRE PROTECTION ENGINEERING ROLES and RESPONSIBILITIES

System	Sub-Systems	Phase	Elements	FP QC / DOR (Ktr)	FEAD (SIOH)	FEC (PCAS)
All Systems	Required Submittals		QC Plan	—	A	S
			Performance Verification Plan	—	A	S
		Test Prep & Preliminary Certifications	Field Visit/Construction Surveillance Reports	—	S	QA
		Final Test Reports &	Final Acceptance Test Reports	A	S	QA or A
			Final Life Safety/Fire Protection Certification	—	S	A
Sprinkler Systems	Wet Pipe Sprinkler Systems	Test Preparation	Process/review system submittal (Qualifications of Installer, Shop Drawings, Data Sheets & Calcs)	A	C	S
			Process/review Preliminary Test Reports & Certifications	—	RA	S
			Witness hydrostatic test.	A	C	—
			Witness flush test.	V	W	—
			Visually inspect system for adherence to plan, completeness, and adequacy of installation.	A	QA	QA
			Visually inspect pipe pentrations	A	QA	QA
			Visually inspect sprinklers for location and that they are not painted / taped.	A	QA	QA
			Visually inspect seismic bracing	A	C	QA
			Operate control valves {Other than main service entrance riser}	A	C	QA
			Visually inspect check valve installation	A	C	QA
			Visually inspect test/drain discharge locations	A	C	QA
			Witness backflow preventer forward-flow test (NFPA 13, §16.2.5).	V	W	W
			Inspect/test alarm valve assembly and water service entrance(pipe sleeves, thrust rods, etc.), including valves, flow switch & tamper switches)	V	C	W
			Inspect/test flow control valve assembly	V	C	W
	Additional requirements for Dry Pipe, Preaction - Deluge		Process system submittal (Qualifications of Installer, Shop Drawings, Data Sheets & Calcs)	A	C	S
			Preliminary Test Reports & Certifications	—	RA	S
			Witness hydrostatic test.	A	C	—
			Witness flush test.	V	W	—
		Final Test	Verify Low-point drains are provided	V	—	QA
			Visually inspect air supply and piping	A	S	QA
			Witness backflow preventer test.	V	W	W
			Test high-low pressure air switch operation	V	—	W
			Inspect/Test deluge or dry valve riser assembly (including control valves, alarm switch & tamper switches), and functional operation	A	S	W
			Inspect/test detection and releasing system	See Fire Alarm System		

KEY = A - Approve, R - Review, W - Witness, RA - Receipt Acknowledge, S - Surveillance Review, V- Verification and Testing, C - Copy, QA - Quality Assurance

FIRE PROTECTION ENGINEERING ROLES and RESPONSIBILITIES

System	Sub-Systems	Phase	Elements	FP QC / DOR (Ktr)	FEAD (SIOH)	FEC (PCAS)
Water Distribution	**Fire hydrants, distribution piping, & control valves**	Final Test	Process system submittal (Qualifications of Installer, Shop Drawings, Data Sheets & Calcs)	A	C	—
			Preliminary Test Reports & Certifications	—	RA	S
			Visually inspect all thrust blocks.	A	QA	—
			Witness hydrostatic test.	A	C	—
			Witness flush testing of hydrant	A	C	QA
			Operate all control/isolation valves (each)	V	S	QA
			Operate fire hydrants and check for proper drainage (each)	V	S	QA
	Water storage	Construction	Preliminary Test Reports & Certifications	—	RA	S
			Verify suction piping w/in tank is installed in accordance with design	A	C	S
Pumps for Fire Protection (Water & Foam)	**Pumps & Controllers**		Process system submittal (Qualifications of Installer, Shop Drawings, Data Sheets & Calcs)	A	C	S
			Preliminary Test Reports & Certifications	—	RA	S
		Test Preparation	Visually inspect system for adherence to plan, completeness, and adequacy of installation.	A	QA	QA
		Test Preparation	Witness pump controller functional tests (including automatic transfer switch operation & battery transfer as applicable).	A	QA	W
			Witness flow test to generate performance curve (pressure vs discharge, rpms, amps, shaft alignment)	V	QA	W
		Final Test	Witness automatic and manual starts & stops	V	QA	W
			Verify that controller supervisory signals are received by the fire alarm control panel	V	C	W

KEY = A - Approve, R - Review, W - Witness, RA - Receipt Acknowledge, S - Surveillance Review, V- Verification and Testing, C - Copy, QA - Quality Assurance

FIRE PROTECTION ENGINEERING ROLES and RESPONSIBILITIES

System	Sub-Systems	Phase	Elements	FP QC / DOR (Ktr)	FEAD (SIOH)	FEC (PCAS)
Fire Alarm Systems	**Evacuation / Notification Detection & Releasing Systems.**	Test Preparation & Final Test	Process system submittal (Qualifications of Installer, Shop Drawings, Data Sheets & Calcs)	A	C	S
			Preliminary Test Reports & Certifications	—	RA	S
			Visually inspect system for adherence to plan, completeness, and adequacy of installation. (30,000 SQ. FT.)	A	QA	QA
			Test initiating devices for proper operation. (Activate 15% of smoke or heat detectors with no failures {30,000 sq. ft)/(625 sq. ft/ detector)(0.15)=7}	A	QA	QA
			Test initiating circuits for shorts, ground faults, and general operation	A	C	QA
			Test signaling circuits for shorts, ground faults, and general operation	A	C	QA
			Verify audible and visual devices operate properly and audible devices can be heard throughout the facility	A	C	QA
			Test peripheral devices (door hold opens, etc)	A	C	QA
			Witness functional test of the main control panel	V	C	W
			Test interface with other systems (i.e., preaction, gaseous, etc.)	V	C	W
			Test that correct signals are being sent to the base receiving station	V	C	W
			Test recall for elevators - See "Others - Elevators" {Bldg 2 stories or more}	V	S	W
			Test AHU shut down - See "Others - HVAC"	V	S	W
			Test power shut down - See "Others - {Elevators} Electrical"	V	C	W
	Control Panels used for Releasing Service		Process system submittal (Qualifications of Installer, Shop Drawings, Data Sheets & Calcs)	A	C	S
			Preliminary Test Reports & Certifications	—	RA	S
			Test releasing circuits for shorts, ground faults, and general operation	V	C	W
			Test power shut down - See "Others - Electrical"	V	S	QA
			Test automatic closing of dampers/doors	V	S	W
	Base-Wide Fire Reporting System		Process system submittal (Qualifications of Installer, Shop Drawings, Data Sheets & Calcs)	A	C	S
			Preliminary Test Reports & Certifications	—	RA	S
			Test transmitting devices to ensure the signals are received at the main console **{per bldg}**	V	C	W
			Test the main console for redundancy requirements	V	S	W

KEY = A - Approve, R - Review, W - Witness, RA - Receipt Acknowledge, S - Surveillance Review, V- Verification and Testing, C - Copy, QA - Quality Assurance

FIRE PROTECTION ENGINEERING ROLES and RESPONSIBILITIES

System	Sub-Systems	Phase	Elements	FP QC / DOR (Ktr)	FEAD (SIOH)	FEC (PCAS)
Miscelaneous Extinguishing Systems	**Gaseous Systems**	Final Test	Process system submittal (Qualifications of Installer, Shop Drawings, Data Sheets & Calcs)	A	C	S
			Preliminary Test Reports & Certifications	—	RA	S
			Visually inspect system for adherence to plan, completeness, and adequacy of installation.	A	S	QA
			Verify correct nozzles were installed	A	S	W
			Witness room pressurization test	V	S	W
			Witness full functional test to verify cylinder head functions properly and all control/interface functions operate accordingly.	V	S	W
			Inspect/test detection and releasing system	See Fire Alarm System		
	Wet Chemical & Dry Chemical Systems	Test Prep	Process system submittal (Qualifications of Installer, Shop Drawings, Data Sheets & Calcs)	A	C	S
			Preliminary Test Reports & Certifications	—	RA	S
			Verify piping and nozzles are installed in accordance with manufacturer's listing requirements	A	S	W
			Witness discharge test - ensure nozzles are bagged if discharging water in a wet chemical system	V	S	W
		Final Test	Verify alarm and supervisory signals are sent to the FACP	V	S	W
			Verify power and gas are disconnect when system activates (if applicable)	V	S	W
			Verify exhaust system either continues to run or shuts down depending on listing (if applicable)	V	S	W
	Foam Systems (All types)	Test Preparation	Process system submittal (Qualifications of Installer, Shop Drawings, Data Sheets & Calcs)	A	C	S
			Preliminary Test Reports & Certifications	—	RA	S
			Review test plan	—	C	QA
			Review the contractor's test plan for environmental and other compliance	—	S	QA
			Inspect/test detection and releasing system	See Fire Alarm System		
			Visually inspect system for adherence to plan, completeness, and adequacy of installation. Conduct functional test of entire system. Submit report.	A	QA	QA
			Verify correct foam generators / discharge devices are installed and properly piped	A	—	QA
			Verify correct size pipe and installed properly	A	—	QA
			Verify riser assembly (deluge valve) is installed properly	A	—	QA
		Final Test	Verify strainer has proper mesh	V	QA	W
		Final Test	Conduct performance test to ensure proper setting and operation of foam control valves and discharge devices. *(multiply by the number of risers)*	V	QA	W
			Conduct functional test of each generator, ratio controller, or proportioner. *(multiply by the number of risers)*	—	QA	W

KEY = A - Approve, R - Review, W - Witness, RA - Receipt Acknowledge, S - Surveillance Review, V- Verification and Testing, C - Copy, QA - Quality Assurance

FIRE PROTECTION ENGINEERING ROLES and RESPONSIBILITIES

System	Sub-Systems	Phase	Elements	FP QC / DOR (Ktr)	FEAD (SIOH)	FEC (PCAS)
Passive	**Fire / Smoke Barriers IBC Inspections (Section 109)**	Preliminary and Final Inspections	Process system submittal (Qualifications of Installer, Shop Drawings, Data Sheets & Calcs)	A	C	S
			Preliminary Test Reports & Certifications	—	RA	S
			Inspect Lath & gypsum board installation	A	QA	QA
			Inspect fire-rated / smoke wall and/or floor penetrations	A	S	QA
			Inspect wall/ceiling/roof joint	A	S	QA
			Inspect/test fire & smoke damper installation and performance	A	S	QA
			Inspect fire doors and frames	A	QA	QA
Life Safety Features	**Exit Signs and Emergency Lighting**	Preliminary	Verify installed locations of exit signs.	A	S	QA
			Verify installed locations of emergency lighting	A	S	QA
		Final Test	Check performance of emergency lighting systems and battery back-up.	A	S	QA
	Emergency Generators		Check to ensure all life safety features on the emergency generator are provide with power in the required amount of time	A	S	QA
Other Systems	**Elevators**	Test	Verify elevator re-call to primary floor	A	S	QA
			Verify elevator re-call to alternate floor	A	S	QA
			Test power disconnect upon water flow	V	S	QA
			Verify signal in elevator cab activates	V	S	QA
	Smoke Control / Exhaust Systems	Preliminary Test	Verify smoke exhaust / smoke control system activates via appropriate initiating devices (IBC §1704)	A	S	QA
			Verify location of duct detectors and for proper installation	A	S	QA
		Final Test	Perform operational test to show smoke exhaust / smoke control system functions as designed	V	S	QA
			Special Inspections for smoke control (IBC §1704) (See NFPA 92A & 92B, Chap. 8.)	A	W	W
			Perform operational test to verify detector functions properly and shuts down the correct AHU	V	S	QA
	Electrical	Pre-Test	Verify each detector associated with the electrical equipment disconnects power	A	S	QA
		Final Test	Test power disconnect for associated electronic equipment	V	S	QA

KEY = A - Approve, R - Review, W - Witness, RA - Receipt Acknowledge, S - Surveillance Review, V- Verification and Testing, C - Copy, QA - Quality Assurance

MECHANICAL ENGINEERING ROLES and RESPONSIBILITIES

System	Sub-Systems	Phase	Elements	ME QC / DOR (Ktr)	FEAD (SIOH)	FEC (PCAS)
Energy Supply Systems	**Fuel Oil - ALL**	Field Visit	**Complete System -** Verify contractor provided complete fuel oil system to the facility, including applications and permits	A	QA	—
			Piping - Verify fuel oil piping meets requirements of International Mechanical Code.	A	QA	—
			Testing - Verify oil system testing meets requirements of NFPA 31.	V	W	—
	Fuel Oil - Exterior	Submittal Process	**Piping -** Verify fuel piping is either ASTM A 53 Type E (electric-resistance welded, Grade A or B) black steel; or ASTM A 53 Type S (seamless, Grade A or B) black steel; or API SPEC 5L, seamless, submerged-arc weld or gas metal-arc weld, Grade B, black ste	A	RA	—
			Fuel Pumps - Verify fuel pumps comply with NEMA MG 1, NFPA 70, and are designed for use with hydrocarbon fuels.	A	RA	—
			Fuel Pumps - Verify fuel pumps have a working pressure of 1896 kilopascals (275 psig) at 38 degrees C (100 degrees F).	A	RA	—
			Fuel Meters - Verify fuel meters are continuous duty, positive displacement type, with electronic thermal compensation capability, suitable for outdoor installation.	A	RA	—
			Fuel Meters - Verify fuel meters are designed for use with hydrocarbon fuels and have a working pressure of 1896 kilopascals (275 psig) at 38 degrees C (100 degrees F).	A	RA	—
		Submittal Process/ Field Visit	**Storage Tanks -** Verify aboveground liquid fuel storage tanks are concrete encased or double wall in accordance with UL 142 and UL 2085 with secondary containment and leak monitoring of a capacity to meet the system requirements. Verify overfill/spill con	A	RA/ QA	S
			Dispensing Tanks - Verify Liquid fuel dispensing tanks are concrete encased or double wall in accordance with UL 142 and UL 2085 with secondary containment and leak monitoring of a capacity to meet the system requirements. Verify overfill/spill containme	A	RA/ QA	S
	Fuel Oil - Interior	Submittal Process	**Pumps -** Verify pumps that are not part of the burner assembly are positive dispacement type	A	RA	—
		Field Visit	**Oil Filter -** Verify an oil filter is provided prior to oil entering appliance or pump.	A	QA	QA
		Field Visit	**Drip Legs -** Verify drip legs are provided and properly installed prior to oil entering appliance or pump.	A	QA	—
		Submittal Process	**Storage Tanks -** Verify all storage tanks meet NFPA 31 requirements.	A	RA	—
	Natural Gas - ALL	Field Visit	**Complete System -** Verify contractor provided complete natural gas system to the facility, including applications and permits	A	QA	—
		Field Visit	**Testing -** Verify system was tested at 1.5 times maximum working pressure, but not less than 350 kPa (50 PSI) per NFPA 54	V	W	—

KEY = A - Approve, R - Review, W - Witness, RA - Receipt Acknowledge, S - Surveilance Review, V- Verification and Testing, C - Copy, QA - Quality Assurance

MECHANICAL ENGINEERING ROLES and RESPONSIBILITIES

System	Sub-Systems	Phase	Elements	ME QC / DOR (Ktr)	FEAD (SIOH)	FEC (PCAS)
Energy Supply Systems (continued)	**Natural Gas - Exterior (Contractor installed piping)**	Field Visit	**Piping -** Verify exterior gas piping meets requirements of local natural gas utility	A	QA	—
		Submittal Process	**Piping -** Verify piping meets requirements of ASME B31.8, Gas Transmission and Distribution Piping Systems	A	RA	—
		Submittal Process	**Piping -** Verify the natural gas piping is either ASTM A 53, Type E (electric-resistance welded, Grade A or B) black steel piping or ASTM A 53 Type S (seamless, Grade A or B) black steel piping or ASTM D 2513, Grade PE2406 or PE3408 polyethylene piping an	A	RA	—
		Field Visit	**Meter and Pressure Regulator -** Verify meter and pressure regulator are provided in accordance with local utility requirements.	A	QA	—
		Field Visit	**Piping Identification -** Verify polyethylene plastic tape manufactured specifically for warning and identifying buried utility lines are provided for non-metallic undergound piping systems	A	QA	—
	Natural Gas - Interior	Submittal Process	**Piping -** Verify interior gas piping meets requirements of NFPA 54, National Fuel Gas Code	A	RA	—
	Propane - ALL	Field Visit	**Complete System -** Verify contractor provided complete propane system to the facility, including appropriate applications and permits.	A	QA	—
	Propane - Exterior	Submittal Process	**Piping -** If piping is not provided by propane supplier, verify the propane piping is either ASTM A 53, Type E (electric-resistance welded, Grade A or B) black steel piping or ASTM A 53 Type S (seamless, Grade A or B) black steel piping or ASTM D 2513, Gr	A	RA	—
		Submittal Process	**Fittings -** Confirm Polyethylene fittings meet ASTM D 2683 for socket fittings or ASTM D 2513 for molded butt-fusion fittings	A	RA	—
		Field Visit	**Tank -** Verify propane tank capacity conforms to tank capacity submitted in shop drawings.	A	QA	—
		Submittal Process	**Tank -** If tank is not provided by propane supplier, verify propane tank material and installation comply with NFPA 58.	A	RA	—
		Submittal Process	**Tank -** If tank is not provided by propane supplier, verify propane tank is ASME labeled.	A	QA	—
		Field Visit	**Piping Identiication -** Verify polyethylene plastic tape manufactured specifically for warning and identifying buried utility lines are provided for non-metallic undergound piping systems	A	QA	—

KEY = A - Approve, R - Review, W - Witness, RA - Receipt Acknowledge, S - Surveilance Review, V- Verification and Testing, C - Copy, QA - Quality Assurance

MECHANICAL ENGINEERING ROLES and RESPONSIBILITIES

System	Sub-Systems	Phase	Elements	ME QC / DOR (Ktr)	FEAD (SIOH)	FEC (PCAS)
Energy Supply Systems (continued)	**Propane - Interior**	Field Visit	Verify the propane installation meets the requirements specified in NFPA 58.	A	QA	—
		Submittal Process	**Piping -** Verify standard pipe dimension ratio is not more than 11.5	A	RA	—
	Steam - Exterior Underground	Submittal Process	Confirm the submission of a Certificate of Satisfactory Operation certifying that at least 3 systems installed by the piping system manufacturer within the previous 10 years have and are operating satisfactorily for not less than 5 years.	A	RA	S
		Submittal Process	Confirm the submission of a written certification by the piping system manufacturer that the distribution system installer is technically qualified and experienced in the installation of the system.	A	RA	S
		Submittal Process/ Field Visit	Verify underground steam and condensate piping in separate conduits is direct buried, factory pre-fabricated, pre-insulated, and consist of a steel service pipe with polyurethane insulation and a high-density polyethylene (HDPE) jacket.	A	RA/ QA	—
		Submittal Process/ Field Visit	Confirm piping system fittings and components are factory fabricated and no field insulated fittings are provided.	A	RA/ QA	—
		Field Visit	Verify asbestos cement or plastic conduit piping is not provided.	A	QA	—
		Field Visit	**Piping Insulation -** Verify the piping system insulation thickness is in accordance with contract requirements.	A	QA	—
		Submittal Process	**Isolation Valves -** Verify ASME class 150 isolation valves are provided in manholes for system supply and return lines at take-offs for service to each building .	A	QA	—
		Submittal Process/ Field Visit	**Expansion Loops -** Verify expansion loops are utilized to compensate for piping expansion.	A	RA/ QA	S
		Submittal Process/ Field Visit	**Expansion Anchors -** Verify piping expansion anchors are located outside manholes.	A	RA/ QA	—
		Field Visit	**Manholes -** Verify system manholes are constructed of reinforced, 206.8 bar (3000 psi) concrete. Verify manhole floor and sides are watertight and were made in one monolithic pour. Verify manhole top extends a minimum of 300 mm (6 inches) above grade. V	A	QA	—
		Submittal Process	Verify a sump pit and a vertical sump pump designed for an operating temperature design of 93 degrees C (195 degrees F) minimum are provided in each system manhole.	A	RA	—
		Submittal Process	**Sump Pump - Float Control -** Verify a 2-pole float control is provided for each manhole sump pump.	A	RA	—
		Submittal Process/ Field Visit	**Valves -** For system valves located outside of manholes, verify a cast-iron or ductile-iron valve box and cover of a suitable size are provided. Verify the box cover has the word(s) describing the utility cast on the cover.	A	RA/ QA	—

KEY = A - Approve, R - Review, W - Witness, RA - Receipt Acknowledge, S - Surveilance Review, V- Verification and Testing, C - Copy, QA - Quality Assurance

MECHANICAL ENGINEERING ROLES and RESPONSIBILITIES

System	Sub-Systems	Phase	Elements	ME QC / DOR (Ktr)	FEAD (SIOH)	FEC (PCAS)
Energy Supply Systems (continued)	**Steam - Exterior Aboveground**	Submittal Process	**Piping -** Verify steam piping is either ASTM A 53 Type E (electric-resistance welded, Grade A or B) black steel pipe or ASTM A 53 Type S (seamless, Grade A or B) black steel pipe or, for pipe sizes through 250 mm (9 inches), ASTM A 106 (Grade A or B) black	A	RA	—
		Submittal Process	**Piping -** Verify condensate piping is either ASTM A 53 Type E (electric-resistance welded, Grade A or B) black steel, Weight Class XS (Extra Strong); or ASTM A 53 Type S (seamless, Grade A or B) black steel, Weight Class XS (Extra Strong); or ASTM A 106, G	A	RA	—
		Field Visit	**Piping Insulation -** Verify piping insulation is either fibrous glass, calcium silicate, or cellular glass as indicated in submitted shop drawings. Verify pipe insulation matches existing or surrounding insulation if applicable.	A	QA	—
		Field Visit	**Piping Insulation -** Verify the piping system insulation thickness is in accordance with contract requirements.	A	QA	—
		Field Visit	**Insulation -** Verify insulation is covered with an with aluminum jacket painted to conform with the Base Architectural Plan.	A	QA	—
		Submittal Process/ Field Visit	Verify the use of either MSS SP-58 or MSS SP-69 adjustable supports with insulation protection saddles. Verify roller supports utilize stainless steel axles.	A	RA/ QA	—
		Field Visit	**Support Poles -** Verify support poles are installed with guy wires and necessary hardware.	A	QA	—
		Submittal Process/ Field Visit	**Pipe Expansion -** Verify pipe expansion is compensated by utilizing either expansion loops, guided sliexpansion joints, or flexible ball type expansion joints.	A	RA/ QA	S
	Steam - Interior	Submittal Process	**Steam piping** - Verify is ASTM A106 or A53, Grade B, Schedule 40, black steel, electric-resistance welded or seamless	A	RA	—
		Submittal Process/ Field Visit	**Steam piping** - Verify insulated with mineral fiber or cellular glass insulation with all-purpose jacket	A	RA/ QA	—
		Submittal Process	**Condensate return piping** - Verify is ASTM A106 or ASTM A53, Grade B, Schedule 80, black steel, electric-resistance welded or seamless	A	RA	—
		Submittal Process/ Field Visit	**Condensate return piping** - Verify insulated with mineral fiber or cellular glass insulation with all-purpose jacket	A	RA/ QA	—
		Submittal Process	**Steel pipe fittings** - For piping 50 mm (2 inch) and smaller, verify is ANSI/ASME B16.3 malleable iron screwed fittings or ASME B16.11 socket welding (Class 3000) or ASME B16.11 threaded type (Class 2000)	A	RA	—
		Submittal Process	**Steel pipe fittings** - For piping 63 mm (2-1/2 inch) and larger, verify is ANSI/ASME B16.9 butt-welding fittings or ANSI/ASME B16.5 flanged type	A	RA	—
		Field Visit	**Steam pressure reducing station -** Verify provided for each building	A	QA	—

KEY = A - Approve, R - Review, W - Witness, RA - Receipt Acknowledge, S - Surveilance Review, V- Verification and Testing, C - Copy, QA - Quality Assurance

MECHANICAL ENGINEERING ROLES and RESPONSIBILITIES

System	Sub-Systems	Phase	Elements	ME QC / DOR (Ktr)	FEAD (SIOH)	FEC (PCAS)
nergy Supply Systems (continued)		Submittal Process/ Field Visit	**Steam traps** - Verify steam traps and accessories are in accordance with UFC 3-400-10N	A	RA/ QA	—
		Field Visit	Verify all valves, traps, and PRV's are accessible for service & maintenance	A	QA	—
	Hot Water - Exterior Underground	Submittal Process/ Field Visit	**Piping -** Verify underground hot water supply & return piping in separate conduits is direct buried, factory pre-fabricated, pre-insulated, and consist of a steel service pipe with polyurethane insulation and a high-density polyethylene (HDPE) jacket.	A	RA/ QA	—
		Submittal Process/ Field Visit	Confirm piping system fittings and components are factory fabricated and no field insulated fittings are provided.	A	RA/ QA	—
		Field Visit	Verify asbestos cement or plastic conduit piping is not provided.	A	QA	—
		Submittal Process	The UHDS representative shall be certified in writing by the UHDS manufacturer to be technically qualified and experienced in the installation of the system. Provide a Certificate of Satisfactory Operation certifying that at least 3 systems installed by	A	QA	S
		Field Visit	**Piping Insulation -** Verify the piping system insulation thickness is in accordance with contract requirements.	A	QA	—
		Submittal Process/ Field Visit	**Isolation Valves -** Verify ASME class 150 isolation valves are provided in manholes for system supply and return lines at take-offs for service to each building .	A	RA/ QA	—
		Submittal Process/ Field Visit	**Expansion Loops -** Verify expansion loops are utilized to compensate for piping expansion.	A	RA/ QA	S
		Submittal Process/ Field Visit	**Manholes -** Verify system manholes are constructed of reinforced, 206.8 bar (3000 psi) concrete. Verify manhole floor and sides are watertight and were made in one monolithic pour. Verify manhole top extends a minimum of 300 mm (6 inches) above grade. V	A	RA/ QA	—
		Submittal Process	Verify a sump pit and a vertical sump pump designed for an operating temperature design of 93 degrees C (195 degrees F) minimum are provided in each system manhole.	A	RA	—
		Submittal Process	**Sump Pump - Float Control -** Verify a 2-pole float control is provided for each manhole sump pump.	A	RA	—
		Submittal Process/ Field Visit	**Valves -** For system valves located outside of manholes, verify a cast-iron or ductile-iron valve box and cover of a suitable size are provided. Verify the box cover has the word(s) describing the utility cast on the cover.	A	RA/ QA	—

KEY = A - Approve, R - Review, W - Witness, RA - Receipt Acknowledge, S - Surveilance Review, V- Verification and Testing, C - Copy, QA - Quality Assurance

MECHANICAL ENGINEERING ROLES and RESPONSIBILITIES

System	Sub-Systems	Phase	Elements	ME QC / DOR (Ktr)	FEAD (SIOH)	FEC (PCAS)
En	**Hot Water - Exterior Aboveground**	Submittal Process	**Piping -** Verify hot water piping is either ASTM A 53 Type E (electric-resistance welded, Grade A or B) black steel, Weight Class XS (Extra Strong); or ASTM A 53 Type S (seamless, Grade A or B) black steel, Weight Class XS (Extra Strong); or ASTM A 106, Gr	A	RA	—
		Field Visit	**Piping Insulation -** Verify piping insulation is either fibrous glass, calcium silicate, or cellular glass as indicated in submitted shop drawings.	A	QA	—
		Field Visit	**Piping Insulation -** Verify the piping system insulation thickness is in accordance with contract requirements.	A	QA	—
		Field Visit	**Insulation -** Verify insulation is covered with an with aluminum jacket painted to conform with the Base Architectural Plan.	A	QA	—
		Submittal Process/ Field Visit	**Pipe Expansion -** Verify pipe expansion is compensated by utilizing either expansion loops, guided slip expansion joints, or flexible ball type expansion joints.	A	RA/ QA	S
		Submittal Process/ Field Visit	Verify the use of either MSS SP-58 or MSS SP-69 adjustable supports with insulation protection saddles. Verify roller supports utilize stainless steel axles.	A	RA/ QA	—
		Field Visit	**Support Poles -** Verify support poles are installed with guy wires and necessary hardware.	A	QA	—
	Hot Water - Interior	Submittal Process	**Piping -** Verify hot water piping is electric resistance, welded or seamless, schedule 40, black steel pipe conforming to ASTM A53. Piping 100mm (4 inch) and smaller may be ASTM B 88 Type K or L copper.	A	RA	—
		Submittal Process	**Steel fittings - For piping 50mm (2 inch) and smaller**, verify provided ANSI/ASME B16.3 malleable iron screwed fittings **OR** ASME B16.11 socket welding (Class 3000) fittings OR ASME B16.11 threaded type (Class 2000)	A	RA	—
		Submittal Process	**Steel fittings - For piping 63 mm (2-1/2 inch) and larger**, verify provided ANSI/ASME B16.9 butt-welding fittings **OR** ANSI/ASME B16.5 flanged type	A	RA	—
		Submittal Process	**Copper fittings -** Verify ANSI B16.18 cast bronze solder joint type or ASME/ANSI B16.22 wrought copper solder joint type	A	RA	—

KEY = A - Approve, R - Review, W - Witness, RA - Receipt Acknowledge, S - Surveilance Review, V- Verification and Testing, C - Copy, QA - Quality Assurance

MECHANICAL ENGINEERING ROLES and RESPONSIBILITIES

System	Sub-Systems	Phase	Elements	ME QC / DOR (Ktr)	FEAD (SIOH)	FEC (PCAS)
Energy Supply Systems (continued)		Submittal Process/ Field Visit	**Insulation -** Verify hot water piping insulated with mineral fiber insulation with factory-applied all-purpose jacket	A	RA/ QA	—
		Field Visit	**Isolation valves** - Verify equipment provided with isolation valves for service and repairs	A	QA	—
		Submittal Process/ Field Visit	**Valves -** Verify appropriately sized	A	RA/ QA	—
		Submittal Process/ Field Visit	**Balancing valves -** Verify provided and appropriately sized to balance water flow	A	RA/ QA	QA
		Field Visit	**Appurtenances -** Verify provided (such as air separators, expansion tanks, suction diffusers, strainers, etc)	A	QA	—
		Field Visit	**Test ports -** Verify provided in piping at inlet and outlet of all major system components including boilers, pumps, etc)	A	QA	QA
		Field Visit	Verify all valves and test ports are accessible for service and maintenance	A	QA	—
	Chilled Water & Condenser Water - Exterior Underground	Submittal Process	Verify system provided is direct buried, factory-prefabricated, pre-insulated, chilled water piping systems. Verify all fittings and accessories are designed and factory-fabricated to prevent moisture from entering into the system by manufacturer.	A	RA	S
		Field Visit	Verify backfill and overall installation meets the requirements of the piping system manufacturer.	A	QA	—
		Field Visit	**Isolation Valves -** Verify supply and return line isolation valves are provided at take-offs for service to each building in valve boxes.	A	QA	—
		Submittal Process/ Field Visit	Verify expansion loops are provided to compensate for piping expansion. Verify anchors are provided outside manholes.	A	RA/ QA	S
	Chilled Water & Condenser Water - Exterior Aboveground	Submittal Process	**Piping -** Verify chilled and condenser water piping are either electric resistance welded or seamless Schedule 40 black steel pipe conforming to ASTM A 53 or, for piping 100 mm (4 inch) and smaller, ASTM B 88 Type K or L copper.	A	RA	—
		Submittal Process	If steel piping is used, verify for piping 50 mm (2 inch) and smaller, ANSI/ASME B16.3 malleable iron screwed fittings or ASME B16.11 socket welding (Class 3000) or threaded type (Class 2000) fittings are provided. For piping 63 mm (2-1/2 inch) and large	A	RA	—
		Submittal Process	If copper piping is used, verify ANSI B16.18 cast bronze solder joint fittings or ASME/ANSI B16.22 wrought copper solder joint fittings are provided.	A	RA	—
		Submittal Process/ Field Visit	**Piping Insulation -** Verify piping insulation is either Mineral fiber, Urethane, cellular glass, Faced Phenolic Foam, or Flexible Cellular pipe insulation as indicated in submitted shop drawings.	A	RA/ QA	—

KEY = A - Approve, R - Review, W - Witness, RA - Receipt Acknowledge, S - Surveilance Review, V- Verification and Testing, C - Copy, QA - Quality Assurance

MECHANICAL ENGINEERING ROLES and RESPONSIBILITIES

System	Sub-Systems	Phase	Elements	ME QC / DOR (Ktr)	FEAD (SIOH)	FEC (PCAS)
Energy Supply Systems (continued)		Field Visit	**Piping Insulation -** Verify the piping system insulation thickness is in accordance with contract requirements.	A	QA	—
		Field Visit	**Piping Insulation -** Verify piping insulation is covered with an aluminum jacket.	A	QA	—
		Submittal Process/ Field Visit	Verify the use of either MSS SP-58 or MSS SP-69 adjustable supports with insulation protection saddles. Verify roller supports utilize stainless steel axles.	A	RA/ QA	—
		Field Visit	**Support Poles -** Verify support poles are installed with guy wires and necessary hardware.	A	QA	—
		Submittal Process/ Field Visit	**Pipe Expansion -** Verify pipe expansion is compensated by utilizing either expansion loops, guided slip expansion joints, or flexible ball type expansion joints.	A	RA/ QA	S
	Chilled Water & Condenser Water - Interior	Submittal Process	**Aboveground chilled & condenser water piping -** Verify aboveground chilled water piping is electric resistance welded or seamless schedule 40 black steel pipe conforming to ASTM A 53. Piping 100mm (4 inch) and smaller may be ASTM B 88 Type K or L copper.	A	RA	—
		Submittal Process	**Steel pipe fittings - For piping 50mm (2 inch) and smaller -** Verify provided ANSI/ASME B16.3 malleable iron screwed fittings or ASME B16.11 socket welding (Class 3000) or threaded type (Class 2000).	A	RA	—
		Submittal Process	**Steel pipe fittings - For piping 63mm (2-1/2 inch) and larger -** Verify provided ASME/ANSI B16.9 butt-welding fittings or ASME/ANSI B16.5 flanged type.	A	RA	—
		Submittal Process	**Steel pipe fittings -** Grooved joint pipe coupling systems of appropriate pressure rating are acceptable in lieu of welded or screwed fittings	A	RA	—
		Submittal Process	**Copper fittings -** Verify provided ANSI B16.18 cast bronze solder joint type or ASME/ANSI B16.22 wrought copper solder joint type	A	RA	—
		Field Visit	**Isolation valves -** Verify isolation valves provided on supply and return lines at take-offs for service to each building	A	QA	—
		Field Visit	**Isolation valves -** Verify isolation valves located in valve boxes	A	QA	—
		Submittal Process/ Field Visit	**Insulation -** Verify above-ground chilled water piping insulated with cellular glass insulation. Flexible unicellular insulation may be used on small piping runouts.	A	RA/ QA	—
		Submittal Process/ Field Visit	**Insulation -** Verify above-ground condenser water piping insulated with mineral fiber insulation	A	RA/ QA	—
		Submittal Process/ Field Visit	**Insulation -** Verify all-purpose jacket with vapor retarder provided for above-ground chilled water and condenser piping	A	RA/ QA	—
		Submittal Process/ Field Visit	**Valves -** Verify appropriately sized	A	RA/ QA	—

KEY = A - Approve, R - Review, W - Witness, RA - Receipt Acknowledge, S - Surveilance Review, V- Verification and Testing, C - Copy, QA - Quality Assurance

MECHANICAL ENGINEERING ROLES and RESPONSIBILITIES

System	Sub-Systems	Phase	Elements	ME QC / DOR (Ktr)	FEAD (SIOH)	FEC (PCAS)
Energy Supply Systems (conti		Submittal Process/ Field Visit	**Balancing valves -** Verify provided and appropriately sized to balance water flow	A	RA/ QA	QA
		Submittal Process/ Field Visit	**Relief valves -** Verify provided and appropriately sized	A	RA/ QA	—
		Field Visit	**Test ports -** Verify test ports provided inpiping at inlet and outlet of all major system components including chillers, pumps, etc	A	QA	QA
		Field Visit	Verify all valves and test ports are accessible for service and maintenance	A	QA	—
	AHU's - ALL	Field Visit	**DDC Sensors -** Confirm location of DDC sensors (temp, SP, Freeze, High pressure SP, AFM), if required	A	QA	QA
		Field Visit	**Smoke Detectors -** Confirm location of smoke detectors (if over 2000 cfm)	A	QA	QA
		Field Visit	**Testing - Filters -** Confirm filters are clean prior to testing	A	QA	QA
		Field Visit	**Filters -** Confirm filters are installed	—	—	—
		Field Visit	**Belts -** Confirm belt tightness and alignment	A	QA	QA
		Field Visit	**Coils -** Confirm all coils are clean	A	QA	QA
		Field Visit	**Vibration Isolators -** Confirm vibration isolators installed according to contract docs and unit secured	A	QA	QA
		Field Visit	**Damper -** Confirm damper operation and assembly tightness	A	QA	QA
		Field Visit	**Motor -** Confirm motor size (HP), voltage, amperage, and rpm	A	QA	QA
		Submittal Process	**Fans -** Verify provided have AMCA 210 certified fans with AMCA seal	A	QA	—
		Field Visit	**Fans -** Confirm fan rpm and rotation direction	A	QA	QA
		Field Visit	**OA Intake Plenum -** Confirm OA intake plenum configuration provides for drainage	A	QA	QA
		Field Visit	**AFM -** Confirm air flow monitoring station location in conformance with manufacturer requirements	A	QA	QA
		Field Visit	**Size -** Confirm unit matches schedule req	A	QA	QA
		Submittal Process/ Field Visit	**Fan bearings -** Verify fan bearings were greased (if req) and have min average life of 200,000 hours at design operating conditions	A	RA/ QA	—
		Field Visit	**Birdscreens -** Verify birdscreens provided for outdoor inlets and outlets	A	QA	QA
		Field Visit	Verify all filter and access doors are accessible for service and maintenance	A	QA	—
		Field Visit	Verify provided are modular construction, double wall AHU's with min of 25mm (1 inch) casing insulation	A	QA	—
		Submittal Process	Verify provided have ARI 430 certified fans and ARI certified coils	A	RA	—

KEY = A - Approve, R - Review, W - Witness, RA - Receipt Acknowledge, S - Surveilance Review, V- Verification and Testing, C - Copy, QA - Quality Assurance

MECHANICAL ENGINEERING ROLES and RESPONSIBILITIES

System	Sub-Systems	Phase	Elements	ME QC / DOR (Ktr)	FEAD (SIOH)	FEC (PCAS)
Equipment & Components (continued)		Submittal Process/ Field Visit	**Drain pan -** Verify provided has stainless steel, positive draining condensate drain pan	A	RA/ QA	—
		Submittal Process	**For 100% OA units -** Verify capability provided for cooling, heating, dehumidification, and reheat	A	RA	—
		Submittal Process/ Field Visit	**Ultraviolet disinfection system -** Verify central station ahu's provided with an ultraviolet c-band (UVC) disinfection system for mold, bacteria, and odor control in each air handler that has a chilled water or DX cooling coil	A	RA/ QA	—
		Submittal Process/ Field Visit	**Ultraviolet disinfection system -** Verify irradiation emitters and fixtures installed in sufficient quantity and in such an arrangement so as to provide an equal distribution of UVC energy on the coil and in the drain pan	A	RA/ QA	—
		Submittal Process/ Field Visit	**Ultraviolet disinfection system -** Verify the UVC energy produced has the lowest possible reflected and shadowed losses (To maintain energy efficiency)	A	RA/ QA	—
		Submittal Process/ Field Visit	**Ultraviolet disinfection system -** For energy efficiency, verify power supplies are of the high efficiency electronic type and matched to the emitter	A	RA/ QA	—
		Submittal Process/ Field Visit	**Ultraviolet disinfection system -** For intensity, verify the minimal UVC energy striking the leading edge (if nstalled upstream) or trailing edge (if installed downstream) of all the coil fins is not less than 820 uW/cm2 at the closest point and through pl	A	RA/ QA	—
		Submittal Process/ Field Visit	**Ultraviolet disinfection system -** Verify equal amounts strike the drain pan, either directly or indirectly through reflection	A	RA/ QA	—
		Submittal Process/ Field Visit	**Ultraviolet disinfection system -** For installation, verify emitters and fixtures are installed at right angles to the conforming lines of the coil fins, such that through incident angle reflection, UVC energy bathes all surfaces of the coil and drain pan	A	RA/ QA	—
		Submittal Process/ Field Visit	**Ultraviolet disinfection system -** Verify one complete set of spare bulbs supplied	A	RA/ QA	—
	AHU's - Split System	Submittal Process	Verify provided is factory assembled, packaged AHU rated in accordance with ARI 210/240 or ARI 340/360	A	RA	—
		Field Visit	Verify matching components provided are from the same manufacturer	A	QA	—
	AHU's - Rooftop	Submittal Process/ Field Visit	Verify provided is factory packaged unit in accordance with ARI 430 and suitable for outdoor installation	A	RA/ QA	—
		Field Visit	**Roof Curb -** Verify provided with manufacturer's roof curb	A	QA	—

KEY = A - Approve, R - Review, W - Witness, RA - Receipt Acknowledge, S - Surveilance Review, V- Verification and Testing, C - Copy, QA - Quality Assurance

MECHANICAL ENGINEERING ROLES and RESPONSIBILITIES

System	Sub-Systems	Phase	Elements	ME QC / DOR (Ktr)	FEAD (SIOH)	FEC (PCAS)
nent & Components (continued)	**Roof Curbs**	Field Visit	**Mounting Surface -** Confirm fan or unit mounting surface is parallel to the horizon, not the roof deck if sloped	A	QA	—
		Field Visit	**Waterproofing -** Confirm curb has been flashed properly and seal to the roofing material (no leaks) (waterproofing)	A	QA	—
		Field Visit	**Lightning Rods -** Confirm lightning rods have been attached to units and run to ground	A	QA	—
		Field Visit	**Insulation -** Confirm roof curb is insulated	A	QA	—
		Field Visit	**Size -** Confirm curb is the same size or smaller as the unit being placed on it (tight fit)	A	QA	—
	Fans - ALL	Submittal Process/ Field Visit	Verify fans are AMCA 210 certified with AMCA seal	A	RA/ QA	—
		Submittal Process	**Fan bearings -** Verify fan bearings have min average life of 200,000 hours at design operating conditions	A	RA	—
		Field Visit	**Rotation -** Confirm rotation and alignment	A	QA	QA
		Field Visit	**Belts -** Confirm belt tightness (if provided)	A	QA	QA
		Field Visit	**Motor -** Confirm HP, voltage, amperage	A	QA	QA
		Field Visit	**Size -** Confirm size matches schedule req	A	QA	QA
		Field Visit	Verify fans are accessible for service and maintenance	A	QA	
		Field Visit	**Birdscreens -** Verify bird screens provided for outdoor inlets and outlets	A	QA	QA
		Field Visit	**DDC -** Verify fans provided with means for verifying operation via DDC system	A	QA	QA
	Exhaust Fans (Roof)	Field Visit	**Roof Curb -** Confirm lag bolted to roof curb	A	QA	QA
		Field Visit	**Dome Top -** Confirm dome top is secured	A	QA	QA
		Field Visit	**Type -** Verify centrifugal fans provided	A	QA	
	In-line Fans	Field Visit	**Vibration Isolators -** Confirm hangers & isolation devices	A	QA	QA
		Field Visit	**Flex Connection -** Confirm flexible connection to ductwork	A	QA	QA
		Field Visit	**Speed Controller -** Confirm speed controller installation (if provided)	A	QA	QA
		Field Visit	**Access Panel -** Confirm access panel located properly	A	QA	QA
		Field Visit	**Type -** Verify centrifugal fans provided	A	QA	—
	Wall Fans	Field Visit	**Type -** Verify wall fans provided are propeller fans with fan guards	A	QA	—
		Field Visit	**Type -** Verify wall fans provided are centrifugal fans with backdraft dampers and wall bracket	A	QA	—
	Bathroom Fan	Submittal Process/ Field Visit	Verify provided are UL 507 and UL-Listed, Home Ventilating Institute (HVI) certified, and with AMCA seal for ceiling installation	A	RA/ QA	—

KEY = A - Approve, R - Review, W - Witness, RA - Receipt Acknowledge, S - Surveilance Review, V- Verification and Testing, C - Copy, QA - Quality Assurance

MECHANICAL ENGINEERING ROLES and RESPONSIBILITIES

System	Sub-Systems	Phase	Elements	ME QC / DOR (Ktr)	FEAD (SIOH)	FEC (PCAS)
Equipm	**Range Hoods**	Submittal Process/ Field Visit	Verify provided are UL 507 and UL-Listed, with AMCA seal	A	RA/ QA	—
		Submittal Process/ Field Visit	**Light -** Verify provided with light over stove	A	RA/ QA	—
		Submittal Process	Verify min fan capacity is 160 cfm with max sound level of 5.6 sones	A	RA	—
	Louvers & Hoods - ALL	Submittal Process	**Louver rating** - Verify louvers bear AMCA ratings seal for air performance and water penetration in accordance with AMCA 500 and AMCA 511	A	RA	—
		Submittal Process/ Field Visit	**Construction** - Verify hoods and louvers constructed of anodized aluminum alloy or stainless steel	A	RA/ QA	
		Submittal Process/ Field Visit	**Birdscreens** - Verify provided for louvers and hoods	A	RA/ QA	QA
	Intake Hood (Roof)	Submittal Process/ Field Visit	**Type -** Confirm type as specified	A	RA/ QA	QA
		Field Visit	Confirm top is secured	A	QA	QA
		Submittal Process/ Field Visit	**Size -** Confirm size matches schedule req (free area)	A	RA/ QA	QA
	OA Intake Louvers (Wall)	Submittal Process/ Field Visit	**Type -** Confirm type as specified	A	RA/ QA	QA
		Submittal Process/ Field Visit	**Size -** Confirm size matches schedule req (free area)	A	RA/ QA	QA
		Submittal Process/ Field Visit	Confirm waterproof (when req) and velocity when water carry-over occurs	A	RA/ QA	QA
		Field Visit	**Intake Plenum -** Confirm intake plenum is sloped back to louver or drain has been provided	A	QA	QA
		Field Visit	**Damper -** Confirm opposed blade damper with actuator has been provided	A	QA	QA
		Field Visit	**AFM -** Confirm air flow monitoring type louver has been provided, if req	A	QA	QA

KEY = A - Approve, R - Review, W - Witness, RA - Receipt Acknowledge, S - Surveilance Review, V- Verification and Testing, C - Copy, QA - Quality Assurance

MECHANICAL ENGINEERING ROLES and RESPONSIBILITIES

System	Sub-Systems	Phase	Elements	ME QC / DOR (Ktr)	FEAD (SIOH)	FEC (PCAS)
Equipment & Components (continued)	**Ductwork**	Field Visit	**Construction -** Except as specified herein, verify ductwork constructed, braced, reinforced, installed, supported, and sealed per SMACNA standards	A	QA	QA
		Field Visit	Verify all dampers are accessible for service and maintenance	A	QA	—
		Field Visit	Confirm general construction conforms to contract documents	A	QA	QA
		Field Visit	Confirm correct pressure rating of ductwork has been conformed to SMACNA	A	QA	QA
		Field Visit	Confirm ductwork has been sealed in accordance with specified seal class	A	QA	QA
		Field Visit	**VAV inlet -** Confirm minimum straight duct is 6 duct diameters and same size as VAV terminal inlet	A	QA	QA
		Field Visit	Confirm DALT allowables are met	A	QA	QA
		Submittal Process/ Field Visit	**Access Doors -** Confirm access doors have been provided before every elbow with turning vanes	A	RA/ QA	QA
		Submittal Process/ Field Visit	**Access Doors -** Confirm access doors provided at appropriate locations	A	RA/ QA	QA
		Field Visit	**Flexible duct** - Verify insulated flexible duct used only to adapt to minor offsets for connections to air distribution devices	A	QA	QA
		Submittal Process	**Flexible duct** - Verify is UL 181 listed and per SMACNA DCS with minimum R value of 4	A	RA	—
		Field Visit	**Flexible duct** - Verify maximum length is 2 meters (6 feet)	A	QA	QA
		Field Visit	**Flexible Duct -** Confirm, where flexible ductwork is specified, that the length of flex ductwork is provided to the max req length or less and is supported properly with no abrupt turns (ie: as straight as possible)	A	QA	QA
		Field Visit	**Flexible connectors** - Verify provided between fans and ducts	A	QA	QA
		Submittal Process/ Field Visit	**Damper -** Confirm balancing damper at branch take-off's, not at diffuser neck	A	RA/ QA	QA
		Submittal Process/ Field Visit	**Damper -** Confirm balancing damper construction conforms to the specified seal class	A	RA/ QA	QA
		Submittal Process/ Field Visit	**Damper -** Confirm discharge damper installed on VAV terminal discharge, if req	A	RA/ QA	QA
		Field Visit	**Damper -** Confirm control damper type and location along with actuator type	A	QA	QA
		Submittal Process	**Dampers** - Verify conforms to SMACNA DCS	A	RA	—
		Submittal Process	**Fire dampers** - Verify are rated per UL 555	A	RA	—
		Submittal Process	**Fire dampers** - Verify are dynamic type rated for closure against a moving airstream	A	RA	—

KEY = A - Approve, R - Review, W - Witness, RA - Receipt Acknowledge, S - Surveilance Review, V- Verification and Testing, C - Copy, QA - Quality Assurance

MECHANICAL ENGINEERING ROLES and RESPONSIBILITIES

System	Sub-Systems	Phase	Elements	ME QC / DOR (Ktr)	FEAD (SIOH)	FEC (PCAS)
ent & Components (continued)		Submittal Process/ Field Visit	**Fire dampers** - Verify do not intrude into air stream when in open position	A	RA/ QA	—
		Submittal Process	**Smoke dampers** - Verify are rated per UL 555S	A	RA	—
		Submittal Process/ Field Visit	**Elbows** - Confirm correct elbow type (ie: double wall turning vane, 1.5 radius curved, etc)	A	RA/ QA	QA
		Field Visit	**Bracing** - Confirm proper bracing of high pressure ductwork in accordance with SMACNA	A	QA	QA
		Field Visit	**Filters** - Confirm access to filter rack for ease of filter change out in duct mounted assemblies	A	QA	QA
		Submittal Process/ Field Visit	**Insulation** - Confirm ductwork insulated properly (ext batt, hard, int lined, double wall insulated, etc)	A	RA/ QA	QA
		Field Visit	**Insulation** - Inspect vapor barrier of insulation	A	QA	—
		Field Visit	**Hangers** - Confirm proper duct hangers have been utilized in accordance with spec req	A	QA	QA
		Field Visit	**Vibration Isolators** - Confirm the use of vibration isolation material at unit connection to ductwork free of holes (no leakage)	A	QA	QA
		Submittal Process	**Sound attenuators** - Verify fabricated sound attenuators reduces the rated sound pressure level of the fan down to at least 65 decibels in the 250 Hz (third octave band) center frequency by using a reference sound source calibrated in decibels of sound pow	A	RA	—
		Submittal Process/ Field Visit	**Sound attenuators** - Verify pressure drop does not exceed 157 Pa (0.63 inch of water)	A	RA/ QA	QA
	VAV Boxes - ALL	Submittal Process	Verify units are pressure-independent type and rated per ARI 880	A	QA	—
		Field Visit	**Primary air valve** - Verify not allowed to fully shut-off	A	QA	QA
		Field Visit	**Heating coil** - Verify each box provided with heating coil unless not required by space reheat or heating	A	QA	—
		Field Visit	Verify all VAV box control panels are accessible	A	QA	
		Field Visit	**Electronic controls** - Verify are provided	A	QA	QA
	VAV Terminal Box (Fan-Powered)	Submittal Process	**Type** - Verify units are pressure-independent, fan powered, rated per ARI 880, and UL listed	A	QA	—
		Field Visit	**Filters** - Confirm filter installed and clean	A	QA	QA
		Field Visit	Confirm ductwork on primary inlet is installed with 6 straight duct diameters the same size as the inlet	A	QA	QA
		Submittal Process/ Field Visit	**Dampers** - Confirm discharge damper has been provided and/or coordinated with sheet metal contractor	A	QA	QA
		Field Visit	Confirm fan size & primary inlet sized in accordance with contract documents	A	QA	—
		Field Visit	**Primary Air Valve** - Confirm max/min setting of primary air valve	A	QA	QA
		Field Visit	**Primary air valve** - Verify not allowed to fully shut-off	A	QA	QA

KEY = A - Approve, R - Review, W - Witness, RA - Receipt Acknowledge, S - Surveilance Review, V- Verification and Testing, C - Copy, QA - Quality Assurance

MECHANICAL ENGINEERING ROLES and RESPONSIBILITIES

System	Sub-Systems	Phase	Elements	ME QC / DOR (Ktr)	FEAD (SIOH)	FEC (PCAS)
Equipment		Field Visit	**Size** - Confirm size matches schedule req	A	QA	QA
		Field Visit	**Motor** - Confirm HP, voltage, and amperage of fan motor	A	QA	QA
		Field Visit	**Heating coil** - Verify each box provided with heating coil, if required	A	QA	—
		Field Visit	**Reheat Coils** - Confirm reheat coil size, if req	A	QA	—
		Field Visit	**Reheat Coils** - Confirm reheat coil is piped properly	A	QA	QA
		Field Visit	**Sensors** - Confirm discharge temp sensor provided, if req	A	QA	QA
		Field Visit	Confirm hangers have provisions for vibration isolation	A	QA	QA
		Field Visit	**Electronic controls** - Verify provided with speed controller, discharge volume control damper(s), and return/recirculation air frame and filter	A	QA	QA
		Submittal Process	**Insulation** - Verify in accordance with ASHRAE 90.1	A	RA	—
	VAV Terminal Box (Shut Off)	Field Visit	Confirm ductwork on primary inlet is installed with 6 straight duct diameters the same size as the inlet	A	QA	QA
		Field Visit	**Primary Air Valve** - Confirm max and min setting of primary air valve	A	QA	QA
		Field Visit	**Reheat Coils** - Confirm reheat coil size, if req	A	QA	
		Field Visit	**Reheat Coils** - Confirm reheat coil in piping properly	A	QA	QA
		Field Visit	**Sensors** - Confirm discharge temp sensor provided, if req	A	QA	QA
		Field Visit	Confirm hangers have provisions for vibration isolation	A	QA	QA
		Field Visit	**Size** - Confirm box size matches schedule req	A	QA	QA
	DX VAV Units	Submittal Process	**Finish** - If indicated in ESR Section D30, verify anti-corrosion coating provided is immersion applied, baked phenolic, or other approved coating. Field applied coatings not acceptable.	A	QA	—
		Submittal Process/ Field Visit	**Direct expansion equipment** - Verify is specifically designed and manufactured for VAV applications	A	RA/ QA	—
		Submittal Process/ Field Visit	**Equipment** - Verify from the same manufacturer (central air handling units, VAV boxes/ zone dampers, and zone controls)	A	RA/ QA	—
		Field Visit	**Evaporator coils** - Verify airflow through evaporator coils is not modulated	A	QA	—
		Field Visit	**Zone control damper units** - Verify duct mounted zone control damper units provided with integral control box designed for use with DX VAV packaged systems	A	QA	—
		Submittal Process/ Field Visit	**Air diffusers** - Verify self-modulating air diffusers are not used	A	RA/ QA	—
	Condensing Units	Submittal Process/ Field Visit	**Finish** - If indicated in ESR Section D30, verify anti-corrosion coating provided is immersion applied, baked phenolic, or other approved coating. Field applied coatings not acceptable.	A	RA/ QA	—
		Submittal Process	**Air conditioner** - Verify air-cooled, split system air conditioner provided with ducted air distribution	A	QA	—

KEY = A - Approve, R - Review, W - Witness, RA - Receipt Acknowledge, S - Surveilance Review, V- Verification and Testing, C - Copy, QA - Quality Assurance

MECHANICAL ENGINEERING ROLES and RESPONSIBILITIES

System	Sub-Systems	Phase	Elements	ME QC / DOR (Ktr)	FEAD (SIOH)	FEC (PCAS)
Equipment & Components (continued)		Submittal Process	**Construction and rating** - Verify units are factory assembled, designed, tested, and rated in accordance with ARI 210/ 240 or ARI 340/ 360	A	QA	—
		Submittal Process/ Field Visit	**Clearance** - Verify manufacturer's minimum recommended clearance around condensing units is provided	A	RA/ QA	QA
		Field Visit	**Refrigerant piping size** - Verify is per manufacturer's recommendations	A	QA	—
	Heat Pumps - Ground Source	Submittal Process/ Field Visit	**Finish** - If indicated in ESR Section D30, verify anti-corrosion coating provided is immersion applied, baked phenolic, or other approved coating. Field applied coatings not acceptable.	A	RA/ QA	—
		Submittal Process	**Construction and rating** - Verify units are factory assembled, designed, tested, and rated in accordance with ARI 330	A	QA	—
		Submittal Process	**Heat exchanger** - Verify connected to heat exchanger by closed loop ground source vertical well field	A	RA	—
		Submittal Process/ Field Visit	**Well field** - Verify design and installation of each well field comply with IGSHPA and ASHRAE standards	A	RA/ QA	—
	Heat Pumps - Water Source	Submittal Process/ Field Visit	**Finish** - If indicated in ESR Section D30, verify anti-corrosion coating provided is immersion applied, baked phenolic, or other approved coating. Field applied coatings not acceptable.	A	RA/ QA	—
		Submittal Process	**Construction and rating** - Verify units are factory assembled, designed, tested, and rated in accordance with ARI 210/ 240 or ARI 340/ 360	A	QA	—
	Heat Pumps - Air to Air	Submittal Process/ Field Visit	**Finish** - If indicated in ESR Section D30, verify anti-corrosion coating provided is immersion applied, baked phenolic, or other approved coating. Field applied coatings not acceptable.	A	RA/ QA	—
		Submittal Process	**Heat pumps** - Verify air-cooled, split system heat pumps provided with ducted air distribution	A	RA/ QA	—
		Submittal Process	**Construction and rating** - Verify units are factory assembled, designed, tested, and rated in accordance with ARI 210/ 240 or ARI 340/ 360	A	QA	QA
		Field Visit	**Clearance** - Verify manufacturer's minimum recommended clearance around condensing units is provided	A	QA	—
		Field Visit	**Refrigerant piping size** - Verify is per manufacturer's recommendations	A	QA	QA
		Field Visit	**Insulation** - Verify provided for refrigerant piping suction lines and condensate drain	A	QA	—
	Condensate Return Units	Submittal Process/ Field Visit	Verify has floor-mounted receiver and duplex pump unit	A	RA/ QA	—

KEY = A - Approve, R - Review, W - Witness, RA - Receipt Acknowledge, S - Surveilance Review, V- Verification and Testing, C - Copy, QA - Quality Assurance

MECHANICAL ENGINEERING ROLES and RESPONSIBILITIES

System	Sub-Systems	Phase	Elements	ME QC / DOR (Ktr)	FEAD (SIOH)	FEC (PCAS)
Equipment & Components (continued)	**Equipment Thermal Insulation**	Submittal Process/ Field Visit	**Insulation** - Verify insulation provided for hot and chilled water pumps and equipment as suitable for the temperature and service fit as closely as possible to equipment. May be rigid block, semi-rigid board, or flexible unicellular insulation.	A	RA/ QA	QA
			Vapor retarder - Verify provided for chilled water applications	A	QA	—
	Auxilliary Equipment	Submittal Process/ Field Visit	**Steam-to-hot-water converter** - Verify provided as required for application	A	RA/ QA	—
		Submittal Process	**Heat exchangers** - Verify factory assembled u-tube units provided constructed in accordance with ASME BPVC for steam or hot water. For hot water, plate type heat exchangers may be provided.	A	RA	—
	Furnaces	Submittal Process/ Field Visit	**Construction** - Confirm provided furnace is UL-listed, factory assembled, self-contained, and forced circulation	A	RA/ QA	QA
		Submittal Process/ Field Visit	**Electronic ignition system** - Verify provided	A	RA/ QA	—
		Submittal Process/ Field Visit	**Gas furnace rating** - Confirm unit is design certified by AGA and GAMA efficiency rating certified for gas furnaces.	A	RA/ QA	—
		Submittal Process/ Field Visit	**Oil furnace rating** - Confirm unit meets requirements for NFPA 31 for oil furnaces.	A	RA/ QA	—
		Submittal Process/ Field Visit	**Cooling coil** - Verify provided, if necessary	A	RA/ QA	—
	Unit Ventilators	Submittal Process/ Field Visit	Verify unit is a factory assembled unit ventilator capable of up to 100% OA ventilation and UL-Listed	A	RA/ QA	—
	Unit Heaters	Submittal Process/ Field Visit	See D302004 for gas fired unit heaters	A	RA/ QA	—
	Unit Heaters-Steam	Submittal Process/ Field Visit	Verify provided is UL-Listed and factory assembled	A	RA/ QA	—
	Unit Heaters - Hot Water	Submittal Process/ Field Visit	Verify provided is UL-Listed and factory assembled	A	RA/ QA	—
	Unit Heaters - Cabinet	Submittal Process/ Field Visit	Verify provided is UL-Listed and factory assembled	A	RA/ QA	—

KEY = A - Approve, R - Review, W - Witness, RA - Receipt Acknowledge, S - Surveilance Review, V- Verification and Testing, C - Copy, QA - Quality Assurance

MECHANICAL ENGINEERING ROLES and RESPONSIBILITIES

System	Sub-Systems	Phase	Elements	ME QC / DOR (Ktr)	FEAD (SIOH)	FEC (PCAS)
	Fuel-Fired Unit Heaters - Gas	Submittal Process/ Field Visit	Verify meets requirements for ANSI Z83.8 and AGA label	A	RA/ QA	—
		Submittal Process/ Field Visit	**Discharge louver** - Verify each heater equipped with individually adjustable package discharge louver	A	RA/ QA	QA
		Submittal Process/ Field Visit	**Thermostat** - Verify provided	A	RA/ QA	QA
	Fuel-Fired Unit Heaters - Infrared	Submittal Process/ Field Visit	Verify meets requirements for ANSI Z83.8 and AGA label	A	RA/ QA	—
	Unit Heaters - Electric	Submittal Process/ Field Visit	Verify provided are factory assembled, UL-1025	A	RA/ QA	—
	Heaters - Baseboard	Submittal Process/ Field Visit	Verify provided are factory assembled, UL-1042	A	RA/ QA	—
	Heaters - Wall	Submittal Process/ Field Visit	Verify provided are factory assembled, UL-1025, cabinet heaters	A	RA/ QA	—
	Heaters - Infrared	Submittal Process/ Field Visit	Verify provided are factory assembled, UL-Listed and labeled heaters	A	RA/ QA	—
	Fin Tube Radiators & Convectors	Submittal Process	Verify fin tube radiators and convectors provided with copper tubes and aluminum fins	A	RA	—
		Submittal Process	**Control Valves -** Verify control valves provided are normally open, spring return	A	RA/ QA	QA
	Duct Heater	Submittal Process/ Field Visit	Verify provided is factory assembled, UL-Listed heater	A	RA/ QA	—
		Field Visit	Verify adequate duct length is provided per manufacturer's recommendations upstream & downstream	A	QA	—
		Submittal Process/ Field Visit	Verify control cabinet and heating coil provided	A	RA/ QA	—
	Pumps - ALL	Submittal Process/ Field Visit	Verify provided are centrifugal circulating pumps with motor, motor starter, and motor enclosure conforming to the appropriate NEMA standards	A	RA/ QA	—
		Field Visit	**Insulation -** Verify pumps used for hot service and chilled water service are insulated	A	QA	QA

KEY = A - Approve, R - Review, W - Witness, RA - Receipt Acknowledge, S - Surveilance Review, V- Verification and Testing, C - Copy, QA - Quality Assurance

MECHANICAL ENGINEERING ROLES and RESPONSIBILITIES

System	Sub-Systems	Phase	Elements	ME QC / DOR (Ktr)	FEAD (SIOH)	FEC (PCAS)
Equipment & Components (continued)	**Pumps - Base-mounted**	Field Visit	Confirm size and nameplate data matches schedule req	A	QA	QA
		Field Visit	Verify voltage service matches nameplate	A	QA	QA
		Field Visit	Verify provided are single-stage end suction pumps suitable for chilled, condenser, and hot water heating systems	A	QA	QA
		Field Visit	**Isolation Base -** Confirm isolation base is provided where req	A	QA	QA
		Field Visit	**Insulation -** Confirm insulation enclosure is provided where req	A	QA	QA
		Field Visit	Confirm pressure taps, gages, and shutoffs have been provided in the specified locations	A	QA	QA
		Field Visit	**Balancing Valves -** Confirm the balancing valves have been provided in accordance with manufacturers recommendations and/or in accordance with the appropriate contract document detail	A	QA	QA
		Field Visit	**Balancing Valves -** Confirm balancing valves provided with proper clearances	A	QA	QA
		Field Visit	**Rotation -** Verify rotation direction is correct	A	QA	QA
		Field Visit	**Suction diffusers -** Verify suction diffusers provided on base-mounted pumps	A	QA	QA
	Pumps - In-line	Field Visit	**Location -** Confirm location is correct(ie: in accordance with the contract documents)	A	QA	QA
		Field Visit	Verify constructed of manufacturer's standard materials suitable for chilled, condenser, and hot water heating systems	A	QA	QA
		Field Visit	Confirm voltage provided is correct	A	QA	QA
		Field Visit	**Valve Arrangement -** Confirm valve arrangement around the pump is correct	A	QA	QA
		Field Visit	**Balancing Valve -** Confirm balancing valve has been provided in accordance with the contract documents, if req	A	QA	QA
		Field Visit	**Balancing Valve -** Confirm balancing valves provided with proper clearances	A	QA	QA
	Diffusers, Registers, & Grilles	Field Visit	Confirm location, size, and type have been provided in accordance with the contract documents	A	QA	QA
		Field Visit	**Dampers -** Confirm branch balancing dampers have been provided and dampers, if any, provided with the air device are in the wide open position	A	QA	QA
		Field Visit	**Finish** - Verify are factory-finished	A	QA	—
		Field Visit	**Exterior and exposed edges** - Verify are rolled, or otherwise stiffened and rounded	A	QA	—
	Pipe Sleeves	Field Visit	Verify pipe sleeves provided at each wall and floor penetration	A	QA	—
		Field Visit	Verify sleeves are of a material suitable to protect the carrier pipe (2 pipe sizes larger) and sealed with an appropriate flexible material	A	QA	—

KEY = A - Approve, R - Review, W - Witness, RA - Receipt Acknowledge, S - Surveilance Review, V- Verification and Testing, C - Copy, QA - Quality Assurance

MECHANICAL ENGINEERING ROLES and RESPONSIBILITIES

System	Sub-Systems	Phase	Elements	ME QC / DOR (Ktr)	FEAD (SIOH)	FEC (PCAS)
Equipment & Components (continued)		Submittal Process/ Field Visit	**Fire Stopping -** In fire rated walls, verify fire stopping provided inaccordance with IBC	A	RA/ QA	—
	Piping Identification	Field Visit	Verify piping provided with identification labels or stencil names or code letters for piping systems in clearly visible letters and symbols	A	QA	—
		Field Visit	Verify arrow-shaped markings provided to indicate direction of flow	A	QA	QA
	Piping - Condensate Drain	Submittal Process/ Field Visit	Verify condensate drain piping provided is ASTM B 88, Type M or L, hard drawn copper	A	RA/ QA	—
	Piping	Field Visit	**Flushing -** Confirm/ witness pipe flushing (make sure water is clear prior to putting final chemicals into water system)	V	W	—
		Field Visit	**Strainers -** Confirm start-up strainer has been removed from **all** strainers (hang at location)	A	QA	—
		Field Visit	**Air Vents -** Confirm air vents are at specified locations and are auto type, if req	A	QA	QA
		Submittal Process/ Field Visit	**Pressure Relief Valves -** Confirm pressure relief valves are sized properly and installed where specified	A	RA/ QA	QA
		Field Visit	Confirm make-up water pressure setting is sufficient for facility (adjust if req for pressure req at highest point	A	QA	QA
		Field Visit	**Expansion Tanks -** Where diaphragm expansion tanks are provided, confirm tank pressure is set in accordance with nameplate	A	QA	QA
		Field Visit	Confirm valve arrangements for each unit coil are as specified on the contract documents	A	QA	QA
		Field Visit	Confirm all valve clearance req's, manufacturer, and/or contract have been adhered to	A	QA	QA
		Field Visit	**Layout -** Confirm piping layout conforms to the contract documents (physically walk all pipe runs to make sure there are no cross connections)	A	QA	QA
		Field Visit	Confirm traps have been provided on condensate lines per the contract documents	A	QA	
		Field Visit	Confirm slope of condensate lines meets spec req	A	QA	
		Field Visit	**Supports -** Confirm piping supported properly (ie: hangers, saddles, seismic (if req))	A	QA	QA
		Field Visit	**Insulation -** Confirm pipe insulated with specified insulation and vapor barrier is intact	A	QA	QA
		Submittal Process/ Field Visit	**Fittings -** Confirm dialectric fittings have been provided where piping of dissimilar metals connect	A	RA/ QA	—
		Field Visit	Confirm condensate piping from equip has been run to floor drains, if req	A	QA	QA
		Field Visit	**Identification -** Confirm piping is marked properly with water type and direction of flow	A	QA	QA
		Field Visit	Confirm provisions have been made in the piping arrangement at each coil for isolation of flow and ease of coil removal	A	QA	QA

KEY = A - Approve, R - Review, W - Witness, RA - Receipt Acknowledge, S - Surveilance Review, V- Verification and Testing, C - Copy, QA - Quality Assurance

MECHANICAL ENGINEERING ROLES and RESPONSIBILITIES

System	Sub-Systems	Phase	Elements	ME QC / DOR (Ktr)	FEAD (SIOH)	FEC (PCAS)
Components (continued)		Field Visit	Confirm steam piping relief valve has been piped to the exterior of the building in a safe location to personnel	A	QA	QA
		Field Visit	Confirm hazard warning and/or hot surface signage is in place at steam piping, equip. (This also applies to hot water systems)	A	QA	—
		Field Visit	**Flow Meters -** Confirm location of flow meters meets factory req for straight, unobstructed inlet and outlet piping	A	QA	QA
	Chillers	Field Visit	**Leaving Water Temp -** Confirm the leaving chilled water temp is below temp specified for terminal equip to compensate for pump heat gain (approx 1.8F/1.0C) (chiller leaving should **never** be same as temp req at terminal unit)	A	QA	QA
		Submittal Process/ Field Visit	Confirm piping/valve arrangement matches contract documents and balancing valve and flow monitoring device have been provided in accordance with manufacturers req and/or detail	A	RA/ QA	QA
		Submittal Process/ Field Visit	**Decoupler -** Confirm decoupler leg is tied into chilled return piping before entering chilled water return header (for multiple chillers)	A	RA/ QA	QA
		Field Visit	Confirm piping arrangement has allotment for access to the cooling and condensing bundles	A	QA	QA
		Field Visit	**Flow Switch -** Confirm flow switch has been provided to protect the chiller from low or lack of flow	A	QA	QA
		Submittal Process/ Field Visit	Confirm BACNET compatable (if req in contract docs) and that the connection has been made to the DDC control system	A	RA/ QA	QA
	Chiller Systems - Closed Circuit Coolers	Submittal Process	**Construction and rating** - Confirm provided is factory assembled conforming to NFPA 214	A	RA	—
		Submittal Process	**Fire hazard rating** - Verify fire hazard rating for plastic impregnated materials does not exceed 25	A	RA	—
		Submittal Process	**Certification** - Verify Cooling Technology Institute 201 certification of tower capability and performance is provided	A	RA	—
		Submittal Process	**Cooler performance** - Verify meets or exceeds that listed in ASHRAE 90.1	A	RA	—
		Submittal Process/ Field Visit	**Hardware** - Verify stainless steel hardware provided	A	RA/ QA	—
		Submittal Process	**Vibration cutout switch** - Verify interlocked with fan motor	A	RA	—
		Submittal Process	**Fan motors** - Verify 2-speed or adjustable frequency drive fan motors provided	A	RA	—
		Field Visit	**Safety** - Verify OSHA safety requirements for stairs and handrails are met	A	QA	—

KEY = A - Approve, R - Review, W - Witness, RA - Receipt Acknowledge, S - Surveilance Review, V- Verification and Testing, C - Copy, QA - Quality Assurance

MECHANICAL ENGINEERING ROLES and RESPONSIBILITIES

System	Sub-Systems	Phase	Elements	ME QC / DOR (Ktr)	FEAD (SIOH)	FEC (PCAS)
Equipment &	**Chiller Systems - Water Cooled Chillers**	Submittal Process	**Construction and rating** - Verify self-contained chiller provided meeting requirements of ARI 550/590-98	A	RA	—
		Field Visit	**Control panel** - Verify provided with manufacturer's standard controls and protection circuits	A	QA	—
		Submittal Process/ Field Visit	**DDC system** - If DDC system required in project, verify control interface provided for remote monitoring of chiller's operating parameters, functions, and alarms from DDC control system central workstation	A	RA/ QA	QA
		Submittal Process	**Automatic capacity-reduction system** - Verify provided for stable operation from 100 to 10 percent of full load capacity	A	RA	—
	Chiller Systems - Air Cooled	Submittal Process	**Construction and rating** - Verify provided air-cooled chillers are type indicated in Project Program and meet requirements of ARI 550/590-98	A	RA	—
		Submittal Process	**Control panel** - Verify provided with manufacturer's standard controls and protection circuits	A	RA	—
		Submittal Process/ Field Visit	**DDC System** - If DDC system required in project, verify control interface provided for remote monitoring of chiller's operating parameters, functions, and alarms from DDC control system central workstation	A	RA/ QA	QA
		Submittal Process	**Reciprocating chillers** - Verify minimum of four stages of unloading provided at 25% per stage minimum	A	RA	—
		Submittal Process	**Reciprocating chillers** - Verify provided with hot gas bypass	A	RA	—
		Submittal Process	**Head pressure control** - Verify provided for cold temperature operation	A	RA	—
		Submittal Process/ Field Visit	**Freeze protection** - Verify provided for chiller and piping	A	RA/ QA	QA
		Submittal Process/ Field Visit	**Condenser coils** - Verify provided are copper tube with aluminum fins unless specified otherwise	A	RA/ QA	QA
		Submittal Process/ Field Visit	**Condenser coils** - If condenser coil coatings indicated in ESR Section D30, verify provided with copper tube/ copper fin construction or immersion applied, baked phenolic, or other approved coating. Field applied coatings not acceptable.	A	RA/ QA	QA
		Submittal Process/ Field Visit	**Condenser coils** - Verify condenser coils provided with manufacturer's optional louvered covers or hail guards for protection against vandalism, debris, or hail	A	RA/ QA	—
	Cooling Tower	Field Visit	Confirm tower size HP, voltage per contract docs	A	QA	QA
		Submittal Process/ Field Visit	Confirm tower constructed in accordance with specs (ie: galvanized, stainless steel, fiber-glass)	A	RA/ QA	QA
		Submittal Process/ Field Visit	**Sump** - Confirm height of cooling tower sump is above intake of condenser water pumps (min of 3 to 4 feet)	A	RA/ QA	QA

KEY = A - Approve, R - Review, W - Witness, RA - Receipt Acknowledge, S - Surveilance Review, V- Verification and Testing, C - Copy, QA - Quality Assurance

MECHANICAL ENGINEERING ROLES and RESPONSIBILITIES

System	Sub-Systems	Phase	Elements	ME QC / DOR (Ktr)	FEAD (SIOH)	FEC (PCAS)
Equipment & Components (continued)		Submittal Process/ Field Visit	Confirm return line to tower has trap leg below well unless the by-pass is piped directly to cooling tower well	A	RA/ QA	QA
		Field Visit	**Overflow -** Confirm tower well overflow is low enough to prevent the well from overflowing	A	QA	QA
		Field Visit	**Make-up Float -** Confirm tower well make-up float setting shuts of prior to water level reaching the top of the overflow	A	QA	QA
		Field Visit	**Fan Rotation -** Confirm tower fan rotation is correct	A	QA	QA
		Field Visit	**Well Heater -** Confirm tower well heater is installed, if req	A	QA	QA
		Field Visit	**Shut-off Valve -** Confirm tower shut-off valve has been installed in proper location, if req	A	QA	QA
		Field Visit	**Fan Discharge -** Confirm tower fan discharge is unobstructed from above	A	QA	QA
		Field Visit	**Heat Trace -** Confirm tower piping above grade is heat traced, if req	A	QA	QA
		Submittal Process	**Construction and rating** - Confirm provided is factory assembled conforming to NFPA 214	A	RA	—
		Submittal Process	**Fire hazard rating** - Confirm fire hazard rating for plastic impregnated materials does not exceed 25	A	RA	—
		Submittal Process	**Certification** - Verify Cooling Technology Institute 201 certification of tower capability and performance is provided	A	RA	—
		Submittal Process	**Cooling tower performance** - Verify meets or exceeds that listed in ASHRAE 90.1	A	RA	—
		Submittal Process/ Field Visit	**Construction** - Verify construction is as indicated in ESR Section D30 with fill material of PVC formed sheets	A	RA/ QA	—
		Submittal Process/ Field Visit	**Hardware** - Verify stainless steel hardware provided	A	RA/ QA	—
		Submittal Process	**Vibration cutout switch** - Verify interlocked with fan motor	A	QA	—
		Submittal Process	**Fan motors** - Verify 2-speed or adjustable frequency drive fan motors provided	A	QA	—
		Submittal Process/ Field Visit	**Work platforms** - Verify provided at all locations in tower that require periodic maintenance	A	RA/ QA	
		Submittal Process/ Field Visit	**Isolation valves** - For multi-cell installations, verify isolation valves provided on inlets and outlets of each cell	A	RA/ QA	—
	Fan Coil Units	Field Visit	Confirm size and location in accordance with contract docs	A	QA	QA
		Field Visit	**Filter Access -** Confirm filter accessibility	A	QA	QA
		Field Visit	Confirm vibration isolation provided for on hangers and at ductwork connection	A	QA	QA
		Field Visit	Confirm installation of auxilliary drain pan (if req) along with respective condensate drain piping	A	QA	QA

KEY = A - Approve, R - Review, W - Witness, RA - Receipt Acknowledge, S - Surveilance Review, V- Verification and Testing, C - Copy, QA - Quality Assurance

MECHANICAL ENGINEERING ROLES and RESPONSIBILITIES

System	Sub-Systems	Phase	Elements	ME QC / DOR (Ktr)	FEAD (SIOH)	FEC (PCAS)
Equipment & Components (continued)		Field Visit	Confirm valves arranged properly including the straight pipe diameters req before and after the balancing valve	A	QA	QA
		Submittal Process/ Field Visit	**Speed Controller -** Confirm speed controller has been provided, if req in contract docs	A	RA/ QA	QA
		Field Visit	**Fan Access -** Confirm fan access is accessible by maintenance staff	A	QA	QA
		Field Visit	Confirm unit tagging has been provided	A	QA	—
		Field Visit	Confirm operational	A	QA	—
		Submittal Process/ Field Visit	**Sensors -** Confirm leaving air temp sensor has been provided	A	RA/ QA	QA
		Submittal Process	Verify provided are UL-Listed, factory assembled and tested fan coils, ARI 440, and ARI certified	A	QA	—
	Thru Wall Classroom Terminal Units	Field Visit	Confirm size and location in accordance with contract docs	A	QA	QA
		Field Visit	Confirm operational	A	QA	—
		Field Visit	Confirm piping arrangement meets contract docs req's	A	QA	QA
	Packaged Thru Wall Units	Submittal Process	Verify provided is factory assembled air conditioner or heat pump and rated in accordance with ARI 310 or ARI 380 and ARI certified	A	RA	—
		Submittal Process	Verify provided unit includes heat and operates under the standard unit controls (Not sure if worded correctly, D305006 1.4)	A	RA	—
		Submittal Process	**Wall Sleeve -** Verify unit designed to allow ease of maintenance by use of a wall sleeve	A	RA	QA
		Submittal Process/ Field Visit	**Condensate Removal -** Verify provided unit includes internal condensate removal (condensate shall not be externally drained)	A	RA/ QA	QA
	Room Air Conditioners	Submittal Process	Verify provided is factory assembled air conditioner or heat pump and rated in accordance with AHAM RAC-1	A	RA	—
		Submittal Process/ Field Visit	Verify auxiliary electric heat included and operates under the standard unit controls	A	RA/ QA	QA
		Submittal Process	Verify provided unit is AHAM certified or listed in AHAM DCRAC	A	RA	—
	Computer Room Units	Field Visit	Confirm size and location	A	QA	QA
		Field Visit	Confirm all features have been provided	A	QA	QA
		Field Visit	Confirm water connection to humidifier	A	QA	QA
		Field Visit	**Fan Rotation -** Confirm fan rotation	A	QA	QA
		Submittal Process	If computer room unit req'd, verify DOR utilized UFGS Spec section 23 81 23.00 20 (Computer Room Air Conditioning Units) for the project spec and submitted the edited spec section as part of the design submittal for the project	A	RA	—
	Boilers	Field Visit	Confirm size and location	A	QA	—
		Field Visit	**Stack -** Confirm stack material and arrangement meet contract doc req's	A	QA	QA

KEY = A - Approve, R - Review, W - Witness, RA - Receipt Acknowledge, S - Surveilance Review, V- Verification and Testing, C - Copy, QA - Quality Assurance

MECHANICAL ENGINEERING ROLES and RESPONSIBILITIES

System	Sub-Systems	Phase	Elements	ME QC / DOR (Ktr)	FEAD (SIOH)	FEC (PCAS)
		Field Visit	**Stack -** Confirm stack above roof does not touch roof curb and guy wires have been provided	A	QA	QA
		Field Visit	**Stack -** Confirm stack type is per contract docs and the height above the parapet and/or building meets code req's	A	QA	QA
		Field Visit	Confirm fuel train meets contract docs and code req's with no leaks	A	QA	QA
		Submittal Process/ Field Visit	**Make-up Air -** Confirm adequate make-up air for the boiler(s) has been provided under positive pressure to the room	A	RA/ QA	QA
		Field Visit	**Relief Valve -** Confirm relief valve setting and operation	A	QA	—
		Field Visit	**DDC -** Confirm boilers have been interfaced with the DDC system	A	QA	QA
		Field Visit	Confirm pump/piping arrangement meets contract docs including circulation pump, if req	A	QA	QA
		Submittal Process/ Field Visit	Confirm boiler sequencing panel has been provided by the boiler manufacturer, if req in the contract docs	A	RA/ QA	QA
	Boilers - Hot Water	Submittal Process	**Load capacity** - Verify boiler type provided meets building load capacity as indicated in ESR Section D30, if required	A	RA	—
		Submittal Process/ Field Visit	**Construction and rating** - Verify boiler designed, tested, and installed per ASME CSD-1 (Controls and Safety Devices) and ASME BPVC (Boiler and Pressure Vessel Code)	A	RA/ QA	—
		Submittal Process/ Field Visit	**Construction** - Verify boiler meets requirements of UL 795, ANSI Z83.3, and ASME CSD	A	RA/ QA	—
		Submittal Process/ Field Visit	**Burners** - Confirm provided are make, model, and type certified and approved by manufacturer of provided boiler	A	RA/ QA	—
		Submittal Process/ Field Visit	Verify burner controls and flame safety equipment conform to either ASME CSD-1 or NFPA 58 as dictated by input	A	RA/ QA	—
		Submittal Process/ Field Visit	**Boiler controls** - Verify are mounted on a single control panel mounted on the burner or separate from the burner (includes operating switches, indicating lights, gages, alarms, motor starters, fuses, and circuit elements of the control system). If separa	A	RA/ QA	—
		Submittal Process/ Field Visit	**Trim** - Verify boiler trim complies with ASME BPVC SEC IV, ASME CSD-1, and additional appurtenances as specified herein	A	RA/ QA	—
		Submittal Process/ Field Visit	**Pressure gages** - Confirm provided have scale equivalent to 1.5 times the outlet water pressure on supply water piping and return water piping	A	RA/ QA	—
		Submittal Process/ Field Visit	**Thermometers - Piping** - Confirm provided have scale equivalent to 1.5 times the outlet water temperature on supply water piping and return water piping	A	RA/ QA	—
		Field Visit	**Drain valve** - Verify provided and piped to floor drain	A	QA	—

MECHANICAL ENGINEERING ROLES and RESPONSIBILITIES

System	Sub-Systems	Phase	Elements	ME QC / DOR (Ktr)	FEAD (SIOH)	FEC (PCAS)
Equipment & Components (continued)		Submittal Process/ Field Visit	**Air vent valve** - Verify provided with screwed connection, stainless steel disk, and stainless steel seats to vent entrapped air	A	RA/ QA	—
		Submittal Process	**Boiler stack** - Verify provided boiler stack insulated in accordance with manufacturer's recommendations and conform to NFPA 211, or pre-manufactured multi-wall stacks provided complying with NFPA 54 or NFPA 58 and UL-listed	A	RA	—
		Submittal Process/ Field Visit	**Thermometer - Flue gas** - Verify provided and mounted in flue gas outlet	A	RA/ QA	—
		Field Visit	**Cleaning** - Verify boiler(s) cleaned in accordance with ASME Boiler and Pressure Vessel Code and manufacturer's recommendations prior to startup	A	QA	—
		Field Visit	**Testing** - Verify services are furnished of an engineer or technician approved by the boiler manufacturer for installation, startup, and operational and safety testing	V	W	W
		Field Visit	**Testing** - Verify boiler demonstrates proper operability of combustion control, flame safeguard control, and safety interlocks	V	W	W
	Boilers - Steam		**Confirm meets same requirements specified for hot water boilers except as follows:**			
		Submittal Process/ Field Visit	**Pressure gage** - Confirm provided have scale equivalent to 1.5 times the outlet water pressure on boiler feedwater supply piping and condensate return water piping	A	RA/ QA	—
		Submittal Process/ Field Visit	**Pressure gage** - Confirm provided boiler steam pressure gage has scale equivalent to 1.5 times the boiler rated working pressure	A	RA/ QA	—
		Submittal Process/ Field Visit	**Thermometers - Piping** - Confirm provided have scale equivalent to 1.5 times the outlet water temperature on boiler feedwater piping and return water piping	A	RA/ QA	—
	Insulation - Condensate Drain	Field Visit	**Insulation -** Verify condensate drain piping insulated with flexible cellular insulation	A	QA	—
	Insulation	Field Visit	Verify all ductwork provided with external thermal insulation	A	QA	—

KEY = A - Approve, R - Review, W - Witness, RA - Receipt Acknowledge, S - Surveilance Review, V- Verification and Testing, C - Copy, QA - Quality Assurance

MECHANICAL ENGINEERING ROLES and RESPONSIBILITIES

System	Sub-Systems	Phase	Elements	ME QC / DOR (Ktr)	FEAD (SIOH)	FEC (PCAS)
Equipment & Components (continued)		Field Visit	Verify all ductwork in concelaed spaces insulated with blanket flexible mineral fiber	A	QA	—
		Field Visit	Verify ductwork in mechanical Rooms and exposed locations insulated with rigid mineral fiber insulation	A	QA	—
		Field Visit	Verify insulation provided with factory applied all-purpose jacket with integral vapor retarder	A	QA	—
		Field Visit	In exposed locations, verify jacket provided with white surface suitable for painting	A	QA	—
		Submittal Process/ Field Visit	Verify flame spread/smoke developed rating for all insulation does not exceed 25/ 50	A	RA/ QA	—
		Submittal Process	Verify minimum insulation thickness does not violate minimum required by ASHRAE 90.1	A	RA	—
		Field Visit	Verify the backs of all supply air diffusers insulated with blanket flexible mineral fiber insulation	A	QA	QA
	VFDs	Submittal Process/ Field Visit	Verify are factory-assembled VFD drive control systems for variable speed control	A	RA/ QA	QA
		Submittal Process/ Field Visit	Verify all AHU and pump VFD's are from same manufacturer	A	RA/ QA	QA
		Submittal Process/ Field Visit	Verify each VFD provided includes motor starter, motor disconnects, and controls as required for a complete system	A	RA/ QA	QA
		Submittal Process/ Field Visit	Verify VFD units provided are UL-Listed and comply with the National Electric Code	A	RA/ QA	—
		Submittal Process/ Field Visit	Verify the following accessories were provided: Disconnect switch, Control circuit transformer with primary and secondary fuses, Manual bypass, System hand-off-auto switch with provisions for remote start/stop of the system, System initialized light, Run	A	RA/ QA	QA
	Air Separators	Submittal Process/ Field Visit	**For hot and chilled water -** Verify provided are ASME rated air separators with tangential inlet and outlet connections and automatic air vent	A	RA/ QA	—
	Solids Separators	Submittal Process/ Field Visit	Verify provided are centrifugal solids separators with automatic drain in open systems.	A	RA/ QA	—
	Expansion Tanks	Submittal Process/ Field Visit	For hot and chilled water - Verify provided are ASME rated expansion tanks with polypropylene or butyl diaphragm or compression tanks as indicated in UFC 3-400-10N.	A	RA/ QA	—
	Make-Up Water Station	Field Visit	Verify station consists of a water pressure-reducing valve, filter, and relief valve in the make-up water line to the chilled and hot water systems to maintain the operating pressure	A	QA	—
		Field Visit	Verify a 20mm (3/4 inch) globe valve by-pass provided around the pressure reducing station	A	QA	—
		Field Visit	Verify a reduced pressure backflow preventer provided upstream of the by-pass	A	QA	—

KEY = A - Approve, R - Review, W - Witness, RA - Receipt Acknowledge, S - Surveilance Review, V- Verification and Testing, C - Copy, QA - Quality Assurance

MECHANICAL ENGINEERING ROLES and RESPONSIBILITIES

System	Sub-Systems	Phase	Elements	ME QC / DOR (Ktr)	FEAD (SIOH)	FEC (PCAS)
ent & Components (continued)	**Glycol Make-Up Station**	Submittal Process/ Field Visit	If required, verify a glycol make-up system provided to maintain system proper operating mixture	A	RA/ QA	—
	Chemical Treatment	Submittal Process/ Field Visit	If required, verify chilled and hot water systems provided with automatic chemical treatment system for the control of pH, scale formation, and corrosion inhibition	A	RA/ QA	—
		Field Visit	Verify shot-type feeders provided for manual chemical feed	A	QA	—
		Submittal Process	Verify feeders rated for use with pressures up to 900 kPa (130 PSI) (gage)	A	RA	—
		Submittal Process/ Field Visit	Verify condenser water systems provided with automatic chemical treatment systems that monitor conductivity, pH, etc, and provide for water metering and bleed-off	A	RA/ QA	—
		Submittal Process/ Field Visit	Verify chemicals provided are in accordance with EPA and equipment manufacturer's recommendations	A	RA/ QA	—
	System Flushing	Field Visit	Verify hydronic systems flushed thoroughly prior to system startup	A	QA	—
	Heat Tape	Submittal Process/ Field Visit	Verify heat tape provided is UL-Listed, and self-regulating	A	RA/ QA	—
		Submittal Process/ Field Visit	Verify heat tape provided on piping subject to freezing	A	RA/ QA	QA
	Terminal & package Units	Submittal Process/ Field Visit	Where required in ESR Section D30, verify anti-corrosion coating provided on the casing and both the condenser and evaporater coils to protect against salt air damage	A	RA/ QA	—
		Submittal Process/ Field Visit	Verify anti-corrosion coating is immersion applied, baked phenolic or other approved coating (Field applied coatings are not acceptable)	A	RA/ QA	—
	Seismic Design	Submittal Process	Verify provided inaccordance with UFC 3-400-10N, Mechanical Engineering	A	RA	—
	Energy Recovery Wheel (Enthalpy Wheel)	Field Visit	Verify provided is a total energy (enthalpy) type energy recovery wheel (heat wheel)	A	QA	—
		Submittal Process/ Field Visit	**Media -** Verify media is aluminum or a lightweight polymer coated with a corrosion resistance finish (Etched or oxidized surfaces are not acceptable)	A	RA/ QA	—
		Submittal Process/ Field Visit	Verify heat transfer surfaces are coated with a non-migrating (permanently bonded) absorbent specifically developed for the selective transfer of water vapor	A	RA/ QA	—
		Submittal Process	Verify equal sensible and latent recovery efficiencies are documented through a certification program conducted per ASHRAE 84 and ARI 1060	A	RA	—

KEY = A - Approve, R - Review, W - Witness, RA - Receipt Acknowledge, S - Surveilance Review, V- Verification and Testing, C - Copy, QA - Quality Assurance

System	Sub-Systems	Phase	Elements	ME QC / DOR (Ktr)	FEAD (SIOH)	FEC (PCAS)
Equipme		Submittal Process/ Field Visit	Verify energy recovery wheel provided with insulating housing of double wall construction, rotor seals specifically designed to limit cross-contamination, and a rotation detector	A	RA/ QA	—
		Field Visit	Verify the rotation detector alarms the HVAC control system if rotation stops	A	QA	—
		Field Visit	**Filter Access -** Verify filter sections are readily accessible for maintenance	A	QA	QA
	Heat Pipes	Submittal Process	Verify provided are factory fabricated, assembled and tested heat pipes with counter-flow arrangement	A	RA	—
		Submittal Process	Verify are provided with hermitically sealed, seamless aluminum tube cores with extended surfaces	A	RA	—
		Submittal Process	Verify heat exchanger frame constructed of not less than 16-gage galvanized steel and fitted with intermediate tube supports and flange connections	A	RA	—
		Submittal Process	Verify tube end covers and a partition of galvanized steel provided to separate exhaust and supply air streams without cross-contamination	A	RA	—
		Submittal Process	**Refrigerant -** Verify refrigerant used as the working fluid (Type I refrigerants are not allowed)	A	RA	—
	Exterior Piping Manholes	Submittal Process/ Field Visit	**Manholes -** Verify system manholes are constructed of reinforced, 206.8 bar (3000 psi) concrete. Verify manhole floor and sides are watertight and were made in one monolithic pour. Verify manhole top extends a minimum of 300 mm (6 inches) above grade. V	A	RA/ QA	—
		Submittal Process	Verify a sump pit and a vertical sump pump designed for an operating temperature design of 93 degrees C (195 degrees F) minimum are provided in each system manhole.	A	RA	—
		Submittal Process	**Sump Pump - Float Control -** Verify a 2-pole float control is provided for each manhole sump pump.	A	RA	—
	Exterior Piping Cathodic Protection	Field Visit	If underground steel piping is installed, verify a cathodic protection system is provided.	A	QA	—
		Submittal Process	If a cathodic protection system is provided, verify the system was designed by a National Association of Corrosion Engineers (NACE) certified Cathodic Protection Engineer and they supervised, inspected and tested the installation and performance of the ca	A	QA	QA
		Field Visit	Verify the test stations were post mounted and placed at the manhole or nearby building and test stations were provided at each end of each cathodically protected section.	A	QA	—
	DDC		Verify one of the following provided as directed in ESR Section D30			
		Submittal Process	A) Verify Direct Digital Controls (DDC) provided to comply with UFGS Section 23 09 54.00 20, Direct Digital Control Systems	A	RA	—

KEY = A - Approve, R - Review, W - Witness, RA - Receipt Acknowledge, S - Surveilance Review, V- Verification and Testing, C - Copy, QA - Quality Assurance

MECHANICAL ENGINEERING ROLES and RESPONSIBILITIES

System	Sub-Systems	Phase	Elements	ME QC / DOR (Ktr)	FEAD (SIOH)	FEC (PCAS)
Equipment & Components (continued)		Submittal Process	A) Verify DOR utilized UFGS Spec Section 23 09 54.00 20, Direct Digital Control Systems, for the project spec, and submitted the edited spec section as part of the design submittal for the project	A	RA	—
		Submittal Process/ Field Visit	B) Verify a partial DDC system provided that communicates with the existing DDC system	A	RA/ QA	—
		Submittal Process	B) Notwithstanding any other provisions of this contract, no other product will be acceptable other than that indicated in ESR Section D30	A	RA	—
		Submittal Process/ Field Visit	B) Verify the system has stand alone digital controllers, a communication network, and a workstation computer with control software (Pneumatic controllers and components are not acceptable)	A	RA/ QA	—
		Submittal Process	B) Verify all 120-volt wiring complies with NFPA 70	A	RA	—
		Submittal Process/ Field Visit	B) Verify all 24-volt wiring complies with the IMC and terminal device manufacturer's recommendations	A	RA/ QA	—
	DDC - Equipment Controllers	Submittal Process/ Field Visit	Verify DDC hardware are UL-916 rated	A	RA/ QA	—
		Submittal Process/ Field Visit	Verify controllers used in a distributed control manner	A	RA/ QA	QA
		Submittal Process/ Field Visit	Verify controllers are stand alone with an internal clock and modem	A	RA/ QA	QA
		Submittal Process	Verify the total number of I/O hardware points do not exceed 48 in any controller	A	RA	QA
		Submittal Process	Verify sufficient memory provided for each controller to support required control, communication, trends, alarms, and messages	A	RA	QA
		Submittal Process/ Field Visit	Verify communications ports provided for controller to controller, on-site interface, remote workstation interface, and telecommunications interface	A	RA/ QA	QA
	DDC - Electronic Controls	Submittal Process/ Field Visit	If required, verify programmable thermostats provided with built in keypads for scheduling of day and night temps with two setback periods per day	A	RA/ QA	QA
		Submittal Process/ Field Visit	Verify independent summer and winter programs provided	A	RA/ QA	QA
		Submittal Process/ Field Visit	Verify thermostats have temporary and manual override of schedule and battery backup	A	RA/ QA	QA
	All Submittals	Submittal Process	All equipment and controls hardware reviewed by A/E	A	RA	RA
	DALTS - Submittals	Submittal Process	TAB contractor qualifications & certification	RA	RA	A
		Submittal Process	DALT test equip with certification	RA	RA	A

KEY = A - Approve, R - Review, W - Witness, RA - Receipt Acknowledge, S - Surveilance Review, V- Verification and Testing, C - Copy, QA - Quality Assurance

MECHANICAL ENGINEERING ROLES and RESPONSIBILITIES

System	Sub-Systems	Phase	Elements	ME QC / DOR (Ktr)	FEAD (SIOH)	FEC (PCAS)
		Submittal Proces	DALT test plan	RA	RA	A
		Submittal Proces	DALT tests report including plan drawing of duct to be tested and square foot calc for each section	RA	RA	A
	DALTS - Testing	Submittal Process	Ductwork to be DALT'd	RA	RA	A
		Field Visit	Testing	V	W	W
		Submittal Proces	Pre-final DALT report	RA	C	A
		Submittal Proces	Certified final DALT report	RA	C	A
	DALTS - Acceptance Testing	Field Visit	Quality assurance - Contracting officer DALT field checks	V	W	W
		Field Visit	Additional field checks	V	W	W
	TABS - Submittals	Submittal Process	TAB contractors qualifications & certification	RA	RA	A
		Submittal Process	Pre-TAB engineering report	RA	RA	A
		Submittal Process	*Discussion on TAB procedure	RA	RA	A
		Submittal Process	*Pre-requisite checklist	RA	RA	A
		Submittal Process	*Design review report	RA	RA	A
		Submittal Process	*Preliminary TAB test report	RA	RA	A
		Submittal Process	Certified TAB test report (Season 1)	RA	RA	A
		Submittal Process	Certified TAB test report (Season 2 (coil data))	RA	RA	A
	TABS - Pre-Test Checklist		**1) Variable Air Volume Series Boxes**			
			a) General			
		Field Visit	Louvers installed	V	W	—
		Field Visit	Manual dampers open and locked	V	W	—
		Field Visit	Automatic dampers set properly	V	W	—
		Field Visit	Housing construction leakage	V	W	—
		Field Visit	Access doors per plans & specs.	V	W	—
		Field Visit	Condensate drain piping & pan	V	W	—
		Field Visit	Free from dirt & debris	V	W	—
		Field Visit	Nameplate data clearly visible	V	W	—
			b) Filters			
		Field Visit	Type / size / number correct	V	W	—
		Field Visit	Clean	V	W	—
		Field Visit	Blank-off plates installed	V	W	—
		Field Visit	Frame leakage at a minimum	V	W	—
			c) Coils (Hydronic – Water / Steam)			
		Field Visit	Size & rows	V	W	—
		Field Visit	Fin spacing & condition	V	W	—
		Field Visit	Obstructions and/or debris	V	W	—
		Field Visit	Correct air flow direction	V	W	—
		Field Visit	Correct piping connections / flow	V	W	—

KEY = A - Approve, R - Review, W - Witness, RA - Receipt Acknowledge, S - Surveilance Review, V- Verification and Testing, C - Copy, QA - Quality Assurance

System	Sub-Systems	Phase	Elements	ME QC / DOR (Ktr)	FEAD (SIOH)	FEC (PCAS)
		Field Visit	Valves open & set	V	W	—
		Field Visit	Vents / traps installed correctly	V	W	—
		Field Visit	Provisions for TAB measurements	V	W	—
			d) Coils (Electric)			
		Field Visit	Size & construction	V	W	—
		Field Visit	Airflow direction	V	W	—
		Field Visit	Duct connections	V	W	—
		Field Visit	Safety switches	V	W	—
		Field Visit	Obstructions	V	W	—
		Field Visit	Free from debris	V	W	—
		Field Visit	Contractors & disconnect switches	V	W	—
		Field Visit	Electrical service & connections	V	W	—
		Field Visit	Nameplate data clearly visible	V	W	—
			e) Fans			
		Field Visit	Rotation	V	W	—
		Field Visit	Wheel clearance & balance	V	W	—
		Field Visit	Bearing & motor lubrication	V	W	—
		Field Visit	Drive alignment	V	W	—
		Field Visit	Belt tension	V	W	—
		Field Visit	Drive set screws tight	V	W	—
		Field Visit	Belt guards in place	V	W	—
		Field Visit	Flex duct connector alignment	V	W	—
		Field Visit	Proper unit / duct alignment	V	W	—
		Field Visit	Starters & disconnect switches	V	W	—
		Field Visit	Electrical service & connections	V	W	—
		Field Visit	Nameplate data clearly visible	V	W	—
			f) Vibration isolation			
		Field Visit	Springs & compression	V	W	—
		Field Visit	Base level & free	V	W	—
			2) DUCT SYSTEMS			
			a) General			
		Field Visit	Manual damper positioned & locked	V	W	—
		Field Visit	Damper adjustments accessible	V	W	—
		Field Visit	Access doors closed & tight	V	W	—
		Field Visit	Fire dampers open & accessible	V	W	—
		Field Visit	Terminal units open & set	V	W	—
		Field Visit	Registers/diffusers wide open & set	V	W	—
		Field Visit	Turning vanes in square elbows	V	W	—
		Field Visit	Provisions made for TAB tests	V	W	—
		Field Visit	System installed per plans & specs.	V	W	—
		Field Visit	All ductwork sealed as required	V	W	—
			b) Architectural			
		Field Visit	Windows installed & closed	V	W	—
		Field Visit	Doors closed as required	V	W	—
		Field Visit	Ceiling plenums installed/sealed	V	W	—
		Field Visit	Access doors closed & tight	V	W	—
		Field Visit	Air shafts/openings as required	V	W	—
			3) PUMPS			
			a) Motors			
		Field Visit	Rotation	V	W	—

KEY = A - Approve, R - Review, W - Witness, RA - Receipt Acknowledge, S - Surveilance Review, V- Verification and Testing, C - Copy, QA - Quality Assurance

MECHANICAL ENGINEERING ROLES and RESPONSIBILITIES

System	Sub-Systems	Phase	Elements	ME QC / DOR (Ktr)	FEAD (SIOH)	FEC (PCAS)
System Acceptance (continued)		Field Visit	Lubrication	V	W	—
		Field Visit	Alignment	V	W	—
		Field Visit	Set screws tight	V	W	—
		Field Visit	Guards in place	V	W	—
		Field Visit	Tank level and controls	V	W	—
		Field Visit	Starters & disconnects	V	W	—
		Field Visit	Electrical service & connections	V	W	—
			b) Piping			
		Field Visit	Correct flow	V	W	—
		Field Visit	Correct connections	V	W	—
		Field Visit	Leakage	V	W	—
		Field Visit	Valves positioned & set	V	W	—
		Field Visit	Strainers clean	V	W	—
		Field Visit	Air Vented	V	W	—
		Field Visit	Flexible connectors installed	V	W	—
		Field Visit	Provisions made for TAB tests	V	W	—
		Field Visit	System water clean	V	W	—
			c) Bases			
		Field Visit	Vibration isolation	V	W	—
		Field Visit	Grouting (if required)	V	W	—
		Field Visit	Leveling	V	W	—
			4) HYDRONIC EQUIPMENT			
			a) Boilers			
		Field Visit	Operating controls & devices	V	W	—
		Field Visit	Safety controls & devices	V	W	—
		Field Visit	Lubrication of fans & pumps	V	W	—
		Field Visit	Draft controls & devices	V	W	—
		Field Visit	Piping controls & devices	V	W	—
		Field Visit	Valves set & open	V	W	—
		Field Visit	Water make-up provisions	V	W	—
		Field Visit	Blowdown provisions	V	W	—
		Field Visit	Electrical connections	V	W	—
		Field Visit	Nameplate data clearly visible	V	W	—
			b) Heat Exchangers			
		Field Visit	Correct flow & connections	V	W	—
		Field Visit	Valves open or set	V	W	—
		Field Visit	Air vents or steam traps	V	W	—
		Field Visit	Leakage	V	W	—
		Field Visit	Provisions made for TAB tests	V	W	—
		Field Visit	Nameplate data clearly visible	V	W	—
			c) Cooling Towers/Evaporative Condensers			
		Field Visit	Correct flow & connections	V	W	—
		Field Visit	Valves open or set	V	W	—
		Field Visit	Leakage	V	W	—
		Field Visit	Provisions made for TAB tests	V	W	—
		Field Visit	Sump water level	V	W	—
		Field Visit	Spray nozzles	V	W	—
		Field Visit	Fan/Pump rotation	V	W	—
		Field Visit	Motor/Fan lubrication	V	W	—
		Field Visit	Drives & alignment	V	W	—

KEY = A - Approve, R - Review, W - Witness, RA - Receipt Acknowledge, S - Surveilance Review, V- Verification and Testing, C - Copy, QA - Quality Assurance

MECHANICAL ENGINEERING ROLES and RESPONSIBILITIES

System	Sub-Systems	Phase	Elements	ME QC / DOR (Ktr)	FEAD (SIOH)	FEC (PCAS)
System Acceptance (continued)		Field Visit	Guards in place	V	W	—
		Field Visit	Starters & disconnects	V	W	—
		Field Visit	Electrical connections	V	W	—
		Field Visit	Nameplate data clearly visible	V	W	—
			5) REFRIGERANT EQUIPMENT			
		Field Visit	Crankcase heaters energized	V	W	—
		Field Visit	Operating controls & devices	V	W	—
		Field Visit	Safety controls & devices	V	W	—
		Field Visit	Valves open	V	W	—
		Field Visit	Piping connections & flow	V	W	—
		Field Visit	Flexible connectors	V	W	—
		Field Visit	Oil level & lubrication	V	W	—
		Field Visit	Alignment & drives	V	W	—
		Field Visit	Guards in place	V	W	—
		Field Visit	Vibration isolation	V	W	—
		Field Visit	Starters/Contactors/Disconnects	V	W	—
		Field Visit	Electrical connections	V	W	—
		Field Visit	Nameplate data clearly visible	V	W	—
			6) HYDRONIC PIPING SYSTEM			
		Field Visit	Leak tested	V	W	—
		Field Visit	Fluid levels & make-up	V	W	—
		Field Visit	Relief or safety valves	V	W	—
		Field Visit	Expansion tanks & air vents	V	W	—
		Field Visit	Steam traps & connections	V	W	—
		Field Visit	Strainers clean	V	W	—
		Field Visit	Valves open & set	V	W	—
		Field Visit	Provisions made for TAB tests	V	W	—
		Field Visit	Systems installed per plans & specs.	V	W	—
			7) CONTROLS & CONTROL SYSTEMS			
		Field Visit	Data centers	V	W	—
		Field Visit	Outdoor/return Air/reset	V	W	—
		Field Visit	Economizer set & tested	V	W	—
		Field Visit	AHU Static pressure set	V	W	—
		Field Visit	Room controls calibrated	V	W	—
		Field Visit	VAV box regulators set to design	V	W	—
		Field Visit	VAV box P.E. switches set	V	W	—
		Field Visit	Proper end-of-line static pressure	V	W	—
		Field Visit	VAV box reheats tested	V	W	—
			8) OTHER CHECKS			
		Submittal Process	Appropriate contractors notified of TABS	A	RA	S
		Submittal Process	Preliminary data complete	A	RA	S
		Submittal Process	Test report forms prepared	S	RA	A

KEY = A - Approve, R - Review, W - Witness, RA - Receipt Acknowledge, S - Surveilance Review, V- Verification and Testing, C - Copy, QA - Quality Assurance

MECHANICAL ENGINEERING ROLES and RESPONSIBILITIES

System	Sub-Systems	Phase	Elements	ME QC / DOR (Ktr)	FEAD (SIOH)	FEC (PCAS)
	TABS - Testing	Field Visit	TAB field work	V	W	
		Submittal Process	Preliminary procedures	RA	C	A
		Field Visit	TAB air distrbution systems	V	W	—
		Field Visit	TAB water distribution systems	V	W	—
		Field Visit	Sound measurement work	V	W	—
		Field Visit	TAB work on performance tests without seasonal limitations	V	W	—
		Field Visit	TAB work on performance tests with seasonal limitations	V	W	—
		Field Visit	Marking settings	V	W	—
		Field Visit	Marking of test ports	V	W	—
	TABS - Acceptance Testing	Field Visit	Quality assurance - Contracting officer TAB field checks	V	W	W
		Field Visit	Additional field checks	V	W	W
	ACATS - Submittals	Submittal Process	Controls contractor qualifications	RA	RA	A
		Submittal Process	Manufacturers field report	RA	RA	A
		Submittal Process	Performance verification test plan (PVT)	RA	RA	A
		Submittal Process	Pre-PVT checklist	RA	RA	A
		Submittal Process	Final certified PVT report (with all mods incorporated in as-builts)	RA	RA	A
	ACATS - Pre-PVT Checklist	Field Visit	Prior to conducting the PVT, thoroughly inspect the installed work with the Contractor's QC representative and the mechanical contractor using the following checklist. Submit the checklist with items checked off once verified. Provide a detailed explana	V	W	—
		Field Visit	a. Verify all required mechanical installation work is successfully completed, and all HVAC equipment is working correctly (or will be by the time the PVT is conducted).	V	W	—
		Field Visit	b. Verify HVAC motors operate below full-load amperage ratings.	V	W	—
		Field Visit	c. Verify all required control system components, wiring, and accessories are installed.	V	W	—
		Field Visit	d. Verify the installed control system architecture matches approved drawings.	V	W	—
		Field Visit	e. Verify all control circuits operate at the proper voltage and are free from grounds or faults.	V	W	—
		Field Visit	f. Verify all required surge protection is installed and functions correctly.	V	W	—
		Field Visit	g. Verify the A/C Power Table specified in "CONTROLS SYSTEM OPERATORS MANUALS" is accurate.	V	W	—

KEY = A - Approve, R - Review, W - Witness, RA - Receipt Acknowledge, S - Surveilance Review, V- Verification and Testing, C - Copy, QA - Quality Assurance

System	Sub-Systems	Phase	Elements	ME QC / DOR (Ktr)	FEAD (SIOH)	FEC (PCAS)
System Acceptance (continued)		Field Visit	h. Verify all DDC network communications function properly, including uploading and downloading programming changes.	V	W	—
		Field Visit	i. Using the BACnet protocol analyzer (if provided or required in this specification), verify communications are error free.	V	W	—
		Field Visit	j. Verify each digital controller's programming is backed up.	V	W	—
		Field Visit	k. Verify all wiring, components, and panels are properly labeled.	V	W	—
		Field Visit	l. Verify all required points are programmed into devices.	V	W	—
		Field Visit	m. Verify all TAB work affecting controls is complete.	V	W	—
		Field Visit	n. Verify all valve and actuator zero and span adjustments are set properly.	V	W	—
		Field Visit	o. Verify all sensor readings are accurate and calibrated.	V	W	—
		Field Visit	p. Verify each control valve and actuator goes to normal position upon loss of power.	V	W	—
		Field Visit	q. Verify all control loops are tuned for smooth and stable operation. View trend data where applicable.	V	W	—
		Field Visit	r. Verify each controller works properly in stand-alone mode.	V	W	—
		Field Visit	s. Verify all safety controls and devices function properly, including interfaces with building fire alarm systems.	V	W	—
		Field Visit	t. Verify all electrical interlocks work properly.	V	W	—
		Field Visit	u. Verify all workstations, notebooks and maintenance personnel interface tools are delivered, all system and database software is installed, and graphic pages are created for each workstation and notebook. Notify the Government when phone lines or netw	V	W	—
		Field Visit	v. Verify the as-built (shop) control drawings are completed.	V	W	—
	ACATS - Testing	Field Visit	Field testing of components	V	W	—
		Field Visit	Field testing of programming	V	W	—
		Field Visit	Pre-performance verification testing	V	W	—
	ACATS - Acceptance Testing	Field Visit	Performance verification testing	V	W	W
		Field Visit	Performance verification re-resting	V	W	W

ROOFING ROLES and RESPONSIBILITIES

System	Sub-Systems	Phase	Elements	Roof QC / DOR (Ktr)	FEAD (SIOH)	FEC (PCAS)
Roofing	**Low Sloped Roofs**	Design Guidance	Post Award Kick Off Meeting		S	A
		Design Guidance	Verify Roof Design Assurance	A	R	S
		Submittal Process	Review Shop Drawings	A	S	S
		Submittal Process	Review Manufacturer's Product Data Sheets	A	S	S
		Submittal Process	Review Design Data (to include wind and fire resistance)	A	S	S
		Submittal Process	Review Test Reports	A	S	S
		Submittal Process	Review Certificates	A	S	S
		Submittal Process	Review Sample Roof Warranty	A	S	C
		Field Visit	Conduct Pre Roofing Conference	V	S	S
		Field Visit	Review Delivery, Storage, and Handling	A	S	S
		Field Visit	Verify Conditions for roof application	A	S	S
		Field Visit	Verify Preparation	A	S	S
		Field Visit	Verify Application	A	S	S
		Field Visit	Verify Protection of Applied Roofing	A	S	S
		Field Visit	Verify Field Quality Control	A	S	S
		Field Visit	Verify Operation Maintenance and Support Information (Roof Warranty and Information Card)	A	S	S
	Steep Sloped Roofs	Design Guidance	Post Award Kick Off Meeting		S	A
		Design Guidance	Verify Roof Design Assurance	A	R	S
		Submittal Process	Review Shop Drawings	A	S	S
		Submittal Process	Review Manufacturer's Product Data Sheets	A	S	S
		Submittal Process	Review Design Data (to include wind and fire resistance)	A	S	S
		Submittal Process	Review Test Reports	A	S	S
		Submittal Process	Review Certificates	A	S	S
		Submittal Process	Review Sample Roof Warranty	A	S	C
		Field Visit	Conduct Pre Roofing Conference	V	S	S
		Field Visit	Review Delivery, Storage, and Handling	A	S	S
		Field Visit	Verify Conditions for roof application	A	S	S
		Field Visit	Verify Preparation	A	S	S
		Field Visit	Verify Application	A	S	S
		Field Visit	Verify Protection of Applied Roofing	A	S	S
		Field Visit	Verify Field Quality Control	A	S	S
		Field Visit	Verify Operation Maintenance and Support Information (Roof Warranty and Information Card)	A	S	S

KEY = A - Approve, R - Review, W - Witness, RA - Receipt Acknowledge, S - Surveilance Review, V- Verification and Testing, C - Copy, QA - Quality Assurance

UNDERWATER STRUCTURES ROLES and RESPONSIBILITIES

System	Sub-Systems	Phase	Elements	UW QC / DOR (Ktr)	FEAD (SIOH)	FEC/NF ESC (PCAS)
Waterfront Structure H10 (Uniformat II) - Substructure H1010	**Pile Foundations (H101001) Sheet Piles (H101001) Caissons (H101001) Cofferdams (H101001) Wraps and Encasements (H101001) Sheet Pile Bulheads (H101003) Gravity Walls (H101003) Block Walls (H101003) Seawalls (H101006) Boat Ramps (H101007) Cut-Off Walls (H101008) Wave Attenuation Walls (H101009) Fender Piles (H104001) Dolphins (H104004)**	Submittal Process	Shop Drawings	A	C	S
		Submittal Process	Manufacturer's Data Sheets	A	C	S
		Submittal Process	Pile driving records	A	C	S
		Submittal Process	Concrete testing: petrographic, chemical, service-life modeling	A	C	S
		Submittal Process	As-built drawings, 3D AUTOCAD format	A	C	S
		Field Visit	Validate in-water/underwater structure complies with RFP requirements, e.g., number, location, size, etc.	A	—	W
		Field Visit	Inspect in-water prestressed/precast concrete piles or sheetpiles for alignment, spalls, cracks, damages, defects, lifting hoops cut/area patched, exposed steel ties, penetrations, etc.	A	—	W
		Field Visit	Inspect in-water cast-in-place concrete drilled caissons for alignment, spalls, cracks, damages, defects, concrete quality (hardness), honeycombing, etc.	A	—	W
		Field Visit	Inspect in-water steel piles and/or p/c p/s concrete sheetpiles for alignment, damage/buckling, coating damage, penetrations, gaps, etc.	A	—	W
		Field Visit	Inspect underwater concrete placement for defects such as honeycombing, concrete quality (hardness)	A	—	W
		Field Visit	Inspect underwater slope protection for conformance with RFP requirements such as rock/boulder size, placement gap limits, angle, location (e.g., toe of slope protection), consistency, etc.	A	—	W
		Field Visit	Inspect underwater Cathodic Protection anodes and connections	A	—	W
		Field Visit	Inspect for underwater debris, existing or by construction.	A	—	W
		Field Visit	Validate in-water/underwater structure complies with RFP requirements, e.g., number, location, size, etc.	A	—	W
		Field Visit	Validate in-water/underwater structure complies with RFP requirements, e.g., number, location, size, etc.	A	—	W
		Field Visit	Validate in-water/underwater structure complies with RFP requirements, e.g., number, location, size, etc.	A	—	W

KEY = A - Approve, R - Review, W - Witness, RA - Receipt Acknowledge, S - Surveilance Review, V- Verification and Testing, C - Copy, QA - Quality Assurance

UNDERWATER STRUCTURES ROLES and RESPONSIBILITIES

System	Sub-Systems	Phase	Elements	UW QC / DOR (Ktr)	FEAD (SIOH)	FEC/NFESC (PCAS)
Underwater Cables	**All**	Submittal Process	Shop Drawings	A	C	S
		Submittal Process	Manufacturer's Data Sheets	A	C	S
		Field Visit	Validate in-water/underwater cable complies with RFP requirements, e.g., number, location, size, etc.	A	—	W
		Field Visit	Inspect underwater cable for defects/damages, kinks, missing anchors, coating damage, etc.	A	—	W
		Field Visit	Inspect for underwater debris, existing or by construction.	A	—	W
Underwater Utility Pipes and Conduits	**All**	Submittal Process	Shop Drawings	A	C	S
		Submittal Process	Manufacturer's Data Sheets	A	C	S
		Field Visit	Validate in-water/underwater component complies with RFP requirements, e.g., number, location, size, etc.	A	—	W
		Field Visit	Inspect underwater component for defects/damages, cracks, missing anchors, coating damage, etc.	A	—	W
		Field Visit	Inspect for underwater debris, existing or by construction.	A	—	W

KEY = A - Approve, R - Review, W - Witness, RA - Receipt Acknowledge, S - Surveilance Review, V- Verification and Testing, C - Copy, QA - Quality Assurance

DEFINITIONS

Approve	(A)	Professional or quality control endorsement of the submittal or installed system meets the contract requirements
Review	(R)	To confirm accuracy of the submittal and that it meets contract requirements
Witness	(W)	Observe demonstration of system performance for acceptance
Receipt **A**cknowledge	(RA)	Confirm receipt of submittal with no review necessary
Surveillance Review	(S)	A quality assurance review based on risk, complexity, and workload
Performance **V**erification and Acceptance Testing	(V)	A demonstration of satisfactory construction and system performance
Receive **C**opy of Correspondence	(C)	Receive a copy of the transmittal sheet and/or correspondence letter
Quality **A**ssurance Inspection	(QA)	Witnessing satisfactory performance without testing all devices or visual inspection of various parts of the system

SECTION 01 45 35

SPECIAL INSPECTIONS
02/15

PART 1 GENERAL

1.1 REFERENCES

The publications listed below form a part of this specification to the extent referenced. The publications are referred to within the text by the basic designation only.

INTERNATIONAL CODE COUNCIL (ICC)

ICC IBC (2015) International Building Code

1.2 GENERAL REQUIREMENTS

Perform Special Inspections in accordance with the Statement of Special Inspections, Schedule of Special Inspections and Chapter 17 of ICC IBC. The Statement of Special Inspections and Schedule of Special Inspections are included as an attachment to this specification. Special Inspections are to be performed by an independent third party and are intended to ensure that the work of the prime contractor is in accordance with the Contract Documents and applicable building codes. Special inspections do not take the place of the three phases of control inspections performed by the Contractor's QC Manager or any testing and inspections required by other sections of the specifications.

1.3 DEFINITIONS

1.3.1 Continuous Special Inspections

Continuous Special Inspections is the constant monitoring of specific tasks by a special inspector. These inspections must be carried out continuously over the duration of the particular tasks.

1.3.2 Periodic Special Inspections

Periodic Special Inspections is Special Inspections by the special inspector who is intermittently present where the work to be inspected has been or is being performed.

1.3.3 Perform

Perform these Special Inspections tasks for each welded joint or member.

1.3.4 Observe

Observe these Special Inspections items on a random daily basis. Operations need not be delayed pending these inspections.

1.3.5 Special Inspector (SI)

A qualified person retained by the contractor and approved by the Contracting Officer as having the competence necessary to inspect a

particular type of construction requiring Special Inspections. The SI must be an independent third party hired directly by the Prime Contractor.

1.3.6 Associate Special Inspector (ASI)

A qualified person who assists the SI in performing Special Inspections but must perform inspection under the direct supervision of the SI and cannot perform inspections without the SI on site.

1.3.7 Third Party

A third party inspector must not be company employee of the Contractor or any Sub-Contractor performing the work to be inspected.

1.3.8 Contracting Officer

The Government official having overall authority for administrative contracting actions. Certain contracting actions may be delegated to the Contracting Officer's Representative (COR).

1.3.9 Contractor's Quality Control (QC) Manager

An individual retained by the prime contractor and qualified in accordance with the Section 01 45 00.00 20 QUALITY CONTROL having the overall responsibility for the contractor's QC organization.

1.3.10 Designer of Record (DOR)

A registered design professional contracted by the Government as an A/E responsible for the overall design and review of submittal documents prepared by others. The DOR is registered or licensed to practice their respective design profession as defined by the statutory requirements of the professional registration laws in state in which the design professional works. The DOR is also referred to as the Engineer of Record (EOR) in design code documents.

1.3.11 Statement of Special Inspections (SSI)

A document developed by the DOR identifying the material, systems, components and work required to have Special Inspections.

1.3.12 Schedule of Special Inspections

A schedule which lists each of the required Special Inspections, the extent to which each Special Inspections is to be performed, and the required frequency for each in accordance with ICC IBC Chapter 17.

1.4 SUBMITTALS

Government approval is required for submittals with a "G" designation; submittals not having a "G" designation are for Contractor Quality Control approval.Submittals with an "S" are for inclusion in the Sustainability Notebook, in conformance to Section 01 33 29 SUSTAINABILITY REPORTING. Submit the following in accordance with Section 01 33 00 SUBMITTAL PROCEDURES:

SD-01 Preconstruction Submittals

SIOR Letter of Acceptance; G

Special Inspections Project Manual; G

SD-06 Test Reports

Special Inspections Daily Reports
Special Inspections Biweekly Reports

SD-07 Certificates

Fabrication Plant

AC472 Accreditation

Certificate of Compliance
Special Inspector of Record Qualifications; G
Special Inspector Qualifications; G

SD-11 Closeout Submittals

Comprehensive Final Report of Special Inspections; G

1.5 SPECIAL INSPECTOR QUALIFICATIONS

Submit qualifications for each special inspector .

Certifying Associations	
AABC	Associated Air Balance Council
ACI	American Concrete Institute
AWCI	Association of the Wall and Ceiling Industry
AWS	American Welding Society
FM	Factory Mutual
ICC	International Code Council
NDT	Nondestructive Testing
NICET	National Institute for Certification in Engineering Technologies
PCI	Precast/Prestressed Concrete Institute
PTI	Post-Tensioning Institute
UL	Underwriters Laboratories

1.5.1 Steel Construction and High Strength Bolting

1.5.1.1 Special Inspector

a. ICC Structural Steel and Bolting Special Inspector certificate with one year of related experience, or

b. Registered Professional Engineer with related experience

1.5.1.2 Associate Special Inspector

Engineer-In-Training with one year of related experience.

1.5.2 Welding Structural Steel

1.5.2.1 Special Inspector

a. ICC Structural Welding Special Inspector certificate with one year of related experience, or

b. AWS Certified Welding Inspector

1.5.2.2 Associate Special Inspector

AWS Certified Associate Welding Inspector

1.5.3 Nondestructive Testing of Welds

1.5.3.1 Special Inspector

NDT Level III Certificate

1.5.3.2 Associate Special Inspector

NDT Level II Certificate plus one year of related experience

1.5.4 Cold Formed Steel Framing

1.5.4.1 Special Inspector

a. ICC Structural Steel and Bolting Special Inspector certificate with one year of related experience, or

b. ICC Commercial Building Inspector with one year of experience, or

c. ICC Residential Building Inspector with one year of experience, or

d. Registered Professional Engineer with related experience

1.5.4.2 Associate Special Inspector

Engineer-In-Training with one year of related experience.

1.5.5 Concrete Construction

1.5.5.1 Special Inspector

a. ICC Reinforced Concrete Special Inspector Certificate with one year of related experience, or

b. ACI Concrete Construction Special Inspector, or

c. NICET Concrete Technician Level III Certificate in Construction Materials Testing, or

d. Registered Professional Engineer with related experience

1.5.5.2 Associate Special Inspector

a. ACI Concrete Construction Special Inspector in Training, or

b. Engineer-In-Training with one year of related experience

1.5.6 Masonry Construction

1.5.6.1 Special Inspector

a. ICC Structural Masonry Special Inspector Certificate with one year of related experience, or

b. Registered Professional Engineer with related experience

1.5.6.2 Associate Special Inspector

Engineer-In-Training with one year of related experience.

1.5.7 Verification of Site Soil Condition, Fill Placement and Load-Bearing Requirements

1.5.7.1 Special Inspector

a. ICC Soils Special Inspector Certificate with one year of related experience, or

b. NICET Soils Technician Level II Certificate in Construction Material Testing, or

c. NICET Geotechnical Engineering Technician Level II Construction or Generalist Certificate, or

d. Geologist-In-Training with one year of related experience, or

e. Registered Professional Engineer with related experience

1.5.7.2 Associate Special Inspector

a. NICET Soils Technician Level I Certificate in Construction Material Testing with one year of related experience, or

b. NICET Geotechnical Engineering Technician Level I Construction or Generalist Certificate with one year of related experience, or

c. Engineer-In-Training with one year of related experience

1.5.8 Sprayed Fire Resistant Material

1.5.8.1 Special Inspector

a. ICC Spray-applied Fireproofing Special Inspector Certificate, or

b. ICC Fire Inspector I Certificate with one year of related experience, or

c. Registered Professional Engineer with related experience

1.5.8.2 Associate Special Inspector

Engineer-In-Training with one year of related experience

1.5.9 Mastic and Intumescent Fire Resistant Coatings

1.5.9.1 Special Inspector

a. ICC Spray-applied Fireproofing Special Inspector Certificate, or

b. ICC Fire Inspector I Certificate with one year of related experience, or

c. Registered Professional Engineer with related experience

1.5.9.2 Associate Special Inspector

Engineer-In-Training with one year of related experience.

1.5.10 Exterior Insulation and Finish System (EIFS)

1.5.10.1 Special Inspector

a. AWCI EIFS Inspector Certificate, or

b. Exterior Design Institute Certificate, or

c. Registered Professional Engineer with related experience

1.5.10.2 Associate Special Inspector

Engineer-In-Training with one year of related experience.

1.5.11 Fire-Resistant Penetrations and Joints

1.5.11.1 Special Inspector

a. Passed the UL Firestop Exam with one year of related experience, or

b. Passed the FM Firestop Exam with one year of related experience, or

c. Registered Professional Engineer with related experience

1.5.11.2 Associate Special Inspector

Engineer-In-Training with one year of related experience.

1.5.12 Smoke Control

1.5.12.1 Special Inspector

a. AABC Technician Certification with one year of related experience, or

b. Registered Professional Engineer with related experience

1.5.12.2 Associate Special Inspector

Engineer-In-Training with one year of related experience.

1.5.13 Special Inspector of Record (SIOR)

Registered Professional Engineer

PART 2 PRODUCTS

2.1 FABRICATOR SPECIAL INSPECTIONS

Special Inspections of fabricator's work performed in the fabricator's shop is required to be inspected in accordance with the Statement of Special Inspections and the Schedule of Special Inspections unless the fabricator is certified by the approved agency to perform such work without Special Inspections. Submit the following certification to the Contracting Officer for information to allow work performed in the fabricator's shop to not be subjected to Special Inspections.

American Institute of Steel Construction (AISC) Certified Fabrication Plant, Category STD.

International Accreditation Service, AC472 Accreditation

At the completion of fabrication, submit a certificate of compliance, to be included with the comprehensive final report of Special Inspections, stating that the materials supplied and work performed by the fabricator are in accordance the construction documents.

PART 3 EXECUTION

3.1 RESPONSIBILITIES

3.1.1 Special Inspector of Record

a. Supervise all Special Inspectors required by the contract documents and the IBC.

b. Submit a SIOR Letter of Acceptance to the Contracting Officer attesting to acceptance of the duties of SIOR, signed and sealed by the SIOR.

c. Verify the qualifications of all of the Special Inspectors.

d. Verify the qualifications of fabricators.

h. Prepare a Special Inspections Project Manual, which will cover the following:

(1) Roles and responsibilities of the following individuals during Special Inspections: SIOR, SI, General Contractor, Subcontractors, QC Manager, and DOR.

(2) Organizational chart and/or communication plan, indicating lines of communication.

(3) Contractor's internal plan for scheduling inspections. Address items such as timeliness of inspection requests, who to contact for inspection requests, and availability of alternate inspectors.

(4) Indicate the government reporting procedures.

(5) Propose forms or templates to be used by SI and SIOR to document inspections.

(6) Indicate procedures for tracking nonconforming work and verification that corrective work is complete.

(7) Indicate how the SIOR and/or SI will participate in weekly QC meetings.

(8) Indicate how Special Inspections of shop fabricated items will be handled when the fabricator's shop is not certified per paragraph FABRICATOR SPECIAL INSPECTIONS.

(9) Include a section in the manual that covers each specific item requiring Special Inspections that is indicated on the Schedule of Special Inspections. Provide names and qualifications of each special inspector who will be performing the Special Inspections for each specific item. Provide detail on how the Special Inspections are to be carried out for each item so that the expectations are clear for the General Contractor and the Subcontractor performing the work.

Make a copy of the Special Inspections Project Manual available on the job site during construction. Submit a copy of the Special Inspections Project Manual for approval.

i. Attend coordination and mutual understanding meeting where the information in the Special Inspections Project Manual will be reviewed to verify that all parties have a clear understanding of the Special Inspections provisions and the individual duties and responsibilities of each party.

j. Maintain a 3- ring binder for the Special Inspector's daily and biweekly reports and the Special Inspections Project Manual. This file must be located in a conspicuous place in the project trailer/office to allow review by the Contracting Officer and the DOR.

k. Submit a copy of the Special Inspector's daily reports to the QC Manager.

l. Discrepancies that are observed during Special Inspections must be reported to the QC Manager for correction. If discrepancies are not corrected before the special inspector leaves the site the observed discrepancies must be documented in the daily report.

m. Submit a biweekly Special Inspections report until all work requiring Special Inspections is complete. A report is required for each biweekly period in which Special Inspections activity occurs, and must include the following:

(1) A brief summary of the work performed during the reporting time frame.

(2) Changes and/or discrepancies with the drawings, specifications that were observed during the reporting period.

(3) Discrepancies which were resolved or corrected.

(4) A list of nonconforming items requiring resolution.

(5) All applicable test results including nondestructive testing reports.

o. At the completion of the project submit a comprehensive final report of Special Inspections that documents the Special Inspections completed for the project and corrections of all discrepancies noted in the daily reports. The comprehensive final report of Special Inspections must be signed, dated and bear the seal of the SIOR.

3.1.2 Quality Control Manager

a. Maintain a rework items list that includes discrepancies noted on the Special Inspectors daily report.

3.1.3 Special Inspectors

a. Inspect all elements of the project for which the special inspector is qualified to inspect and are identified in the Schedule of Special Inspections.

b. Attend preparatory phase meetings related to the Definable Feature of Work (DFOW) for which the special inspector is qualified to inspect.

f. Submit a copy of the daily reports to the QC Manager.

g. Discrepancies that are observed during Special Inspections must be reported to the QC Manager for correction. If discrepancies are not corrected before the special inspector leaves the site the observed discrepancies must be documented in the daily report.

h. Submit a biweekly Special Inspection Report until all inspections are complete. A report is required for each biweekly period in which Special Inspections activity occurs, and must include the following:

(1) A brief summary of the work performed during the reporting time frame.

(2) Changes and/or discrepancies with the drawings, specifications that were observed during the reporting period.

(3) Discrepancies which were resolved or corrected.

(4) A list of nonconforming items requiring resolution.

5) All applicable test result including nondestructive testing reports.

j. At the completion of the project submit a comprehensive final report

of Special Inspections that documents the Special Inspections completed for the project and corrections of all discrepancies noted in the daily reports. The comprehensive final report of Special Inspections must be signed, dated and indicate the certification of the special inspector qualifying them to conduct the inspection.

3.2 DEFECTIVE WORK

Check work as it progresses, but failure to detect any defective work or materials must in no way prevent later rejection if defective work or materials are discovered, nor obligate the Contracting Officer to accept such work.

-- End of Section --

SCHEDULE OF SPECIAL INSPECTIONS

Reference UFGS 01 45 35 for all requirements not noted as part of this schedule.

INSPECTION DEFINITIONS:

PERFORM: Perform these tasks for each weld, fastener or bolted connection, and noted verification.

OBSERVE: Observe these items randomly during the course of each work day to insure that applicable requirements are being met. Operations need not be delayed pending these inspections at contractor's risk.

DOCUMENT: Document, with a report, that the work has been performed in accordance with the contract documents. This is in addition to any other reports required in the Special Inspections guide specification.

CONTINUOUS: Constant monitoring of identified tasks by a special inspector over the duration of performance of said tasks.

DESIGNER NOTES (to be deleted after reviewing):

1. This schedule contains minimum requirements. Do not delete applicable inspection tasks unless notes in blue indicate it is acceptable to do so.
2. Blue text = designers notes. The designer must review and edit all blue text in this schedule prior to inserting this schedule into the special inspections spec (UFGS 01 45 35).
3. Check section boxes with ANY inspection tasks applicable to your project. You may choose to delete unchecked sections or leave them in the scheduled unchecked.
4. Individual rows/tasks that that are not applicable to the project may be left in the section, as the inspector can determine whether they occur/apply (e.g. metal trusses in the light gauge framing section for example).
5. Design discipline sections are color coded for easier reference by designers. This schedule does NOT need to be printed in color.
6. When finished editing, delete this note box and save this schedule as a PDF and insert into the project specifications (special inspections section).

A. STRUCTURAL - STEEL – WELDING SECTION

THIS SECTION APPLICABLE IF BOX IS CHECKED: ☒

STEEL INSPECTION PRIOR TO WELDING – VERIFY THE FOLLOWING ARE IN COMPLIANCE IBC 1705.2.1, AISC 360-10: Table C-N5.4-1		
TASK	INSPECTION TYPE[1]	DESCRIPTION
1. Verify that the welding procedures specification (WPS) is available	**PERFORM**	
2. Verify manufacturer certifications for welding consumables are available	**PERFORM**	
3. Verify material identification	**PERFORM**	Type and grade.
4. Welder Identification System	**PERFORM**	The fabricator or erector, as applicable, shall maintain a system by which a welder who has welded a joint or member can be identified. Stamps, if used, shall be the low-stress type.
5. Fit-up of groove welds (including joint geometry)	OBSERVE	✓ Joint preparation ✓ Dimensions (alignment, root opening, root face, bevel) ✓ Cleanliness (condition of steel surfaces) ✓ Tacking (tack weld quality and location) ✓ Backing type and fit (if applicable)
6. Configuration and finish of access holes	OBSERVE	
7. Fit-up of fillet welds	OBSERVE	✓ Dimensions (alignment, gaps at root) ✓ Cleanliness (condition of steel surfaces) ✓ Tacking (tack weld quality and location)
STEEL INSPECTION DURING WELDING – VERIFY THE FOLLOWING ARE IN COMPLIANCE IBC 1705.2.1, AISC 360-10: Table C-N5.4-2		
TASK	INSPECTION TYPE	DESCRIPTION
8. Use of qualified welders	**PERFORM**	Welding by welders, welding operators, and tack welders who are qualified in conformance with requirements.
9. Control and handling of welding consumables	OBSERVE	✓ Packaging ✓ Electrode atmospheric exposure control
10. No welding over cracked tack welds	OBSERVE	
11. Environmental conditions	OBSERVE	✓ Wind speed within limits ✓ Precipitation and temperature
12. Welding Procedures Specification followed	OBSERVE	✓ Settings on welding equipment ✓ Travel speed ✓ Selected welding materials ✓ Shielding gas type/flow rate ✓ Preheat applied ✓ Interpass temperature maintained (min./max.) ✓ Proper position (F, V, H, OH) ✓ Intermix of filler metals avoided
13. Welding techniques	OBSERVE	✓ Interpass and final cleaning ✓ Each pass within profile limitations ✓ Each pass meets quality requirements

[1] **PERFORM**: Perform these tasks for each weld, fastener or bolted connection, and required verification.
OBSERVE: Observe these items on a random sampling basis daily to insure that applicable requirements are met. Operations need not be delayed pending these inspections at contractor's risk.

A. STRUCTURAL - STEEL – WELDING SECTION (CONTINUED)

STEEL INSPECTION AFTER WELDING – VERIFY THE FOLLOWING ARE IN COMPLIANCE IBC 2015 1705.2.1, AISC 360-10: Table C-N5.4-3		
TASK	INSPECTION TYPE [1]	DESCRIPTION
14. Welds cleaned	OBSERVE	
15. Size, length, and location of all welds	**PERFORM**	Size, length, and location of all welds conform to the requirements of the detail drawings.
16. Welds meet visual acceptance criteria	**PERFORM AND DOCUMENT**	✓ Crack prohibition ✓ Weld/base-metal fusion ✓ Crater cross section ✓ Weld profiles ✓ Weld size ✓ Undercut ✓ Porosity
17. Arc strikes	**PERFORM**	
18. k-area	**PERFORM**	When welding of doubler plates, continuity plates or stiffeners has been performed in the k-area, visually inspect the web k-area for cracks.
19. Backing removed, weld tabs removed and finished, and fillet welds added where required	**PERFORM**	
20. Repair activities	**PERFORM AND DOCUMENT**	
21. Document acceptance or rejection of welded joint or member	**PERFORM**	

END SECTION

[1] **PERFORM**: Perform these tasks for each weld, fastener or bolted connection, and required verification.
DOCUMENT: Document in a report that the work has been performed as required. This is in addition to all other required reports.

B. STRUCTURAL - STEEL – BOLTING SECTION

THIS SECTION APPLICABLE IF BOX IS CHECKED: ☒

STEEL INSPECTION TASKS PRIOR TO BOLTING – VERIFY THE FOLLOWING ARE IN COMPLIANCE IBC 1705.2.1, AISC 360-10: Table C-N5.6-1		
TASK	INSPECTION TYPE [1]	DESCRIPTION
1. Manufacture's certifications available for fastener materials	**PERFORM**	
2. Fasteners marked in accordance with ASTM requirements	OBSERVE	
3. Proper fasteners selected for joint detail (grade, type, bolt length if threads are to be excluded from shear plane)	OBSERVE	
4. Proper bolting procedure selected for joint detail	OBSERVE	
5. Connecting elements, including appropriate faying surface condition and hole preparation, if specified, meet applicable requirements	OBSERVE	
6. Proper storage provided for bolts, nuts, washers, and other fastener components	OBSERVE	
STEEL INSPECTION TASKS DURING BOLTING – VERIFY THE FOLLOWING ARE IN COMPLIANCE IBC 1705.2.1, AISC 360-10: Table C-N5.6-2		
TASK	INSPECTION TYPE [1]	DESCRIPTION
7. Fastener assemblies of suitable condition, placed in all holes and washers (if required) are positioned as required	OBSERVE	
8. Joint brought to the snug-tight condition prior to pretensioning operation	OBSERVE	
9. Fastener component not turned by the wrench prevented from rotating	OBSERVE	
10. Bolts are pretensioned in accordance with RCSC Specification, progressing systematically from the most rigid point toward the free edges	OBSERVE	
STEEL INSPECTION TASKS AFTER BOLTING – VERIFY THE FOLLOWING ARE IN COMPLIANCE IBC 1705.2.1, AISC 360-10: Table C-N5.6-3		
TASK	INSPECTION TYPE [1]	DESCRIPTION
11. Document acceptance or rejection of all bolted connections	**DOCUMENT**	

END SECTION

[1] **PERFORM**: Perform these tasks for each weld, fastener or bolted connection, and required verification.
OBSERVE: Observe these items on a random sampling basis daily to insure that applicable requirements are met. Operations need not be delayed pending these inspections at contractor's risk.
DOCUMENT: Document in a report that the work has been performed as required. This is in addition to all other required reports.

C. STRUCTURAL - STEEL - NON DESTRUCTIVE TESTING SECTION

THIS SECTION APPLICABLE IF BOX IS CHECKED: ☒

NONDESTRUCTIVE TESTING OF WELDED JOINTS – VERIFY THE FOLLOWING ARE IN COMPLIANCE IBC 1705.2.1, AISC 360-10: Section N5.5		
TASK	INSPECTION TYPE [1]	DESCRIPTION
1. Use of qualified nondestructive testing personnel	**PERFORM**	Visual weld inspection and nondestructive testing (NDT) shall be conducted by personnel qualified in accordance with AWS D1.8 clause 7.2
2. CJP groove welds	OBSERVE	**[NOTE: DOR must delete this row if section D (SEISMIC PROVISIONS SECTION) is checked]** Dye penetrant testing (DT) and ultrasonic testing (UT) shall be performed on 20% of CJP groove welds for materials greater than 5/16" (8mm) thick. Testing rate must be increased to 100% if greater than 5% of welds tested have unacceptable defects.
3. Welded joints subject to fatigue	OBSERVE	Dye penetrant testing (DT) and Ultrasonic testing (UT) shall be performed on 100% of welded joints identified on contract drawings as being subject to fatigue.
4. Weld tab removal sites	OBSERVE	At the end of welds where weld tabs have been removed, magnetic particle testing shall be performed on the same beam-to-column joints receiving UT

END SECTION

[1] **PERFORM**: Perform these tasks for each weld, fastener or bolted connection, and required verification.
OBSERVE: Observe these items on a random sampling basis daily to insure that applicable requirements are met. Operations need not be delayed pending these inspections at contractor's risk.

D. STRUCTURAL - STEEL – AISC 341 REQUIREMENTS (SEISMIC PROVISIONS) SECTION

THIS SECTION APPLICABLE IF BOX IS CHECKED: ☒

NONDESTRUCTIVE TESTING OF WELDED JOINTS – VERIFY THE FOLLOWING ARE IN COMPLIANCE IBC 1705.2.1, AISC 341-10: Section J6.2		
TASK	INSPECTION TYPE [1]	DESCRIPTION
[NOTE: DOR may uncheck this section for projects NOT designed in accordance with AISC 341 (Seismic Provisions) or for projects designed according to AISC 341, but using an R value equal to 3]		
5. CJP groove welds	OBSERVE	Dye penetrant testing (DT) and ultrasonic testing (UT) shall be performed on 100% of CJP groove welds for materials greater than 5/16" thick (8mm).
6. Beam cope and access hole.	OBSERVE	At welded splices and connections, thermally cut surfaces of beam copes and access holes shall be tested using magnetic particle testing (MT) or dye penetrant testing (DT), when the flange thickness exceeds 1 1/2 in. for rolled shapes, or when the web thickness exceeds 1 1/2 in. for built-up shapes.
7. K-area NDT (AISC 341)	**PERFORM**	Where welding of doubler plates, continuity plates or stiffeners has been performed in the k-area, the web shall be tested for cracks using magnetic particle testing (MT). The MT inspection area shall include the k-area base metal within 3-inches of the weld. The MT shall be performed no sooner than 48 hours following completion of the welding.
8. Placement of reinforcing or contouring fillet welds	**DOCUMENT**	

END SECTION

[1] **PERFORM**: Perform these tasks for each weld, fastener or bolted connection, and required verification.
OBSERVE: Observe these items on a random sampling basis daily to insure that applicable requirements are met. Operations need not be delayed pending these inspections at contractor's risk.
DOCUMENT: Document in a report that the work has been performed as required. This is in addition to all other required reports.

E. STRUCTURAL - STEEL - COMPOSITE CONSTRUCTION [1]

THIS SECTION APPLICABLE IF BOX IS CHECKED: ☒

COMPOSITE CONSTRUCTION PRIOR TO PLACING CONCRETE – VERIFY THE FOLLOWING ARE IN COMPLIANCE IBC 1705.2.1, AISC 360-10: Table N6.1, AISC 341-10: Table J9-1		
TASK	INSPECTION TYPE [2]	DESCRIPTION
1. Placement and installation of steel headed stud anchors	**PERFORM**	
2. Material identification of reinforcing steel (Type/Grade)	OBSERVE	
3. Determination of carbon equivalent for reinforcing steel other than ASTM A706	OBSERVE	
4. Proper reinforcing steel size, spacing, clearances, support, and orientation	OBSERVE	
5. Reinforcing steel has been tied and supported as required	OBSERVE	

END SECTION

F. STRUCTURAL - STEEL - OTHER INSPECTIONS

THIS SECTION APPLICABLE IF BOX IS CHECKED: ☒

OTHER STEEL INSPECTIONS – VERIFY THE FOLLOWING ARE IN COMPLIANCE IBC 1705.2.1, AISC 341-10: Tables J8-1 & J10-1		
TASK	INSPECTION TYPE [2]	DESCRIPTION
1. Anchor rods and other embedments supporting structural steel	**PERFORM**	Verify the diameter, grade, type, and length of the anchor rod or embedded item, and the extent or depth of embedment prior to placement of concrete.
2. Fabricated steel or erected steel frame	OBSERVE	Verify compliance with the details shown on the construction documents, such as braces, stiffeners, member locations and proper application of joint details at each connection.
3. Reduced beam sections (RBS) where/if occurs	**DOCUMENT**	✓ Contour and finish ✓ Dimensional tolerances
4. Protected zones	**DOCUMENT**	No holes or unapproved attachments made by fabricator or erector
5. H-piles where/if occurs	**DOCUMENT**	No holes or unapproved attachments made by the responsible contractor

END SECTION

[1] See Concrete Construction Section for all concrete related inspection of composite steel construction.

[2] **PERFORM**: Perform these tasks for each weld, fastener or bolted connection, and required verification.
OBSERVE: Observe these items on a random sampling basis daily to insure that applicable requirements are met. Operations need not be delayed pending these inspections at contractor's risk.
DOCUMENT: Document in a report that the work has been performed as required. This is in addition to all other required reports.

G. STRUCTURAL - COLD-FORMED METAL DECK - PLACEMENT SECTION

THIS SECTION APPLICABLE IF BOX IS CHECKED: ☒

METAL DECK INSPECTION PRIOR TO DECK PLACEMENT – VERIFY THE FOLLOWING ARE IN COMPLIANCE SDI QA/QC-2011, Appendix 1, Table 1.1		
TASK	INSPECTION TYPE [1]	DESCRIPTION
1. Verify compliance of materials (deck and all deck accessories) with construction documents, including profiles, material properties, and base metal thickness	**PERFORM**	
2. Document acceptance or rejection of deck and deck accessories	**DOCUMENT**	
METAL DECK INSPECTION DURING DECK PLACEMENT – VERIFY THE FOLLOWING ARE IN COMPLIANCE SDI QA/QC-2011, Appendix 1, Table 1.2		
TASK	INSPECTION TYPE [1]	DESCRIPTION
3. Verify compliance of deck and all deck accessories installation with construction documents	**PERFORM**	
4. Verify deck materials are represented by the mill certifications that comply with the construction documents	**PERFORM**	
5. Document acceptance or rejection of installation of deck and deck accessories	**DOCUMENT**	
METAL DECK INSPECTION AFTER DECK PLACEMENT – VERIFY THE FOLLOWING ARE IN COMPLIANCE SDI QA/QC-2011, Appendix 1, Table 1.3		
TASK	INSPECTION TYPE [1]	DESCRIPTION
6. Welding procedure specification (WPS) available	**PERFORM**	
7. Manufactures certifications for welding consumables available	OBSERVE	
8. Material identification (type/grade)	OBSERVE	
9. Check welding equipment	OBSERVE	

END SECTION

[1] **PERFORM**: Perform these tasks for each weld, fastener or bolted connection, and required verification.
OBSERVE: Observe these items on a random sampling basis daily to insure that applicable requirements are met. Operations need not be delayed pending these inspections at contractor's risk.
DOCUMENT: Document in a report that the work has been performed as required. This is in addition to all other required reports.

H. STRUCTURAL - COLD-FORMED METAL DECK – WELDING SECTION

THIS SECTION APPLICABLE IF BOX IS CHECKED: ☒

METAL DECK INSPECTION DURING WELDING – VERIFY THE FOLLOWING ARE IN COMPLIANCE SDI QA/QC-2011, Appendix 1, Table 1.4		
TASK	INSPECTION TYPE [1]	DESCRIPTION
1. Use of qualified welders	OBSERVE	
2. Control and handling of welding consumables	OBSERVE	
3. Environmental conditions (wind speed, moisture, temperature)	OBSERVE	
4. WPS followed	OBSERVE	
METAL DECK INSPECTION AFTER WELDING – VERIFY THE FOLLOWING ARE IN COMPLIANCE SDI QA/QC-2011, Appendix 1, Table 1.5		
TASK	INSPECTION TYPE [1]	DESCRIPTION
5. Verify size and location of welds, including support, sidelap, and perimeter welds.	**PERFORM**	
6. Welds meet visual acceptance criteria	**PERFORM**	
7. Verify repair activities	**PERFORM**	
8. Document acceptance or rejection of welds	**DOCUMENT**	

END SECTION

[1] **PERFORM**: Perform these tasks for each weld, fastener or bolted connection, and required verification.
OBSERVE: Observe these items on a random sampling basis daily to insure that applicable requirements are met. Operations need not be delayed pending these inspections at contractor's risk.
DOCUMENT: Document in a report that the work has been performed as required. This is in addition to all other required reports.

I. STRUCTURAL - COLD-FORMED METAL DECK – FASTENING SECTION

THIS SECTION APPLICABLE IF BOX IS CHECKED: ☒

METAL DECK INSPECTION BEFORE MECHANICAL FASTENING – VERIFY THE FOLLOWING ARE IN COMPLIANCE SDI QA/QC-2011, Appendix 1, Table 1.6		
TASK	INSPECTION TYPE [1]	DESCRIPTION
1. Manufacturer installation instructions available for mechanical fasteners	OBSERVE	
2. Proper tools available for fastener installation	OBSERVE	
METAL DECK INSPECTION DURING MECHANICAL FASTENING – VERIFY THE FOLLOWING ARE IN COMPLIANCE SDI QA/QC-2011, Appendix 1, Table 1.7		
TASK	INSPECTION TYPE [1]	DESCRIPTION
3. Fasteners are positioned as required	OBSERVE	
4. Fasteners are installed in accordance with manufacturer's instructions	OBSERVE	
METAL DECK INSPECTION AFTER MECHANICAL FASTENING – VERIFY THE FOLLOWING ARE IN COMPLIANCE SDI QA/QC-2011, Appendix 1, Table 1.8		
TASK	INSPECTION TYPE [1]	DESCRIPTION
5. Check spacing, type, and installation of support fasteners	**PERFORM**	
6. Check spacing, type, and installation of sidelap fasteners	**PERFORM**	
7. Check spacing, type, and installation of perimeter fasteners	**PERFORM**	
8. Verify repair activities	**PERFORM**	
9. Document acceptance or rejection of mechanical fasteners	**DOCUMENT**	

END SECTION

[1] **PERFORM**: Perform these tasks for each weld, fastener or bolted connection, and required verification.
OBSERVE: Observe these items on a random sampling basis daily to insure that applicable requirements are met. Operations need not be delayed pending these inspections at contractor's risk.
DOCUMENT: Document in a report that the work has been performed as required. This is in addition to all other required reports.

J. STRUCTURAL - LIGHT GAUGE STEEL FRAMING AND/OR LIGHT GAUGE TRUSSES SECTION

THIS SECTION APPLICABLE IF BOX IS CHECKED: ☒

LIGHT GAUGE STEEL CONSTRUCTION AND CONNECTIONS – VERIFY THE FOLLOWING ARE IN COMPLIANCE IBC 1705.2.2, 1705.11.2, 1705.11.3, UFC 4 023 03		
TASK	INSPECTION TYPE[1]	DESCRIPTION
1. Trusses spanning 60-feet or greater where/if applies	**PERFORM**	Verify that temporary and permanent truss restraint/bracing is installed in accordance with approved truss submittal package.
2. Welded connections (seismic and/or wind resisting system)	OBSERVE	Visually inspect all welds composing part of the main wind or seismic force resisting system, including shearwalls, braces, collectors (drag struts), and hold-downs. **[NOTE: DOR must identify critical wind and/or seismic force resisting welds in the contract drawings so that the special inspector can confirm compliance.]**
3. Connections (seismic and/or wind resisting system)	OBSERVE	Visually inspect all screw attachment, bolting, anchoring and other fastening of components within the main wind or seismic force resisting system, including roof deck, roof framing, exterior wall covering, wall to roof/floor connections, braces, collectors (drag struts) and hold-downs. **[NOTE: DOR must identify critical wind and/or seismic force resisting connection/fastener components in the contract drawings so that the special inspector can confirm compliance.]**
4. Cold-formed steel (progressive collapse resisting system where/if applies)	OBSERVE	Verify proper welding operations, screw attachment, bolting, anchoring and other fastening of components within the progressive collapse resisting system, including horizontal tie force elements, vertical tie force elements and bridging elements (UFC 4 023 03). **[NOTE: DOR must identify critical progressive collapse resisting connection/fastener components in the contract drawings so that the special inspector can confirm compliance.]**

END SECTION

K. STRUCTURAL - OPEN-WEB STEEL JOISTS SECTION

THIS SECTION APPLICABLE IF BOX IS CHECKED: ☒

OPEN-WEB STEEL JOISTS AND JOIST GIRDERS – VERIFY THE FOLLOWING ARE IN COMPLIANCE IBC TABLE 1705.2.3		
TASK	INSPECTION TYPE[1]	DESCRIPTION
1. Installation of open-web steel joists and joist girders	OBSERVE	✓ End connections – welded or bolted ✓ Bridging – horizontal and diagonal

END SECTION

[1] **PERFORM**: Perform these tasks for each weld, fastener or bolted connection, and required verification.
OBSERVE: Observe these items on a random sampling basis daily to insure that applicable requirements are met. Operations need not be delayed pending these inspections at contractor's risk.

L. STRUCTURAL - CONCRETE CONSTRUCTION SECTION

THIS SECTION APPLICABLE IF BOX IS CHECKED: ☒

CONCRETE CONSTRUCTION, INCLUDING COMPOSITE DECK – VERIFY THE FOLLOWING ARE IN COMPLIANCE IBC TABLE 1705.3 (ACI 318 REFERENCES NOTED IN IBC TABLE)		
TASK	INSPECTION TYPE [1]	DESCRIPTION
1. Inspect reinforcement, including prestressing tendons, and verify placement.	OBSERVE	Verify prior to placing concrete that reinforcing is of specified type, grade and size; that it is free of oil, dirt and unacceptable rust; that it is located and spaced properly; that hooks, bends, ties, stirrups and supplemental reinforcement are placed correctly; that lap lengths, stagger and offsets are provided; and that all mechanical connections are installed per the manufacturer's instructions and/or evaluation report.
2. Reinforcing bar welding	OBSERVE	✓ Verify weldability of reinforcing bars other than ASTM A 706 ✓ Inspect single-pass fillet welds, maximum 5/16" in accordance with AWS D1.4
3. All other welding	**CONTINUOUS**	Visually inspect all welds in accordance with AWS D1.4
4. Cast in place anchors and post installed drilled anchors (downward inclined)	OBSERVE	Verify prior to placing concrete that cast in place anchors and post installed drilled anchors have proper embedment, spacing and edge distance.
5. Post-installed adhesive anchors in horizontal or upward inclined orientations	**CONTINUOUS AND DOCUMENT**	✓ Inspect as required per approved ICC-ES report ✓ Verify that installer is certified for installation of horizontal and overhead installation applications ✓ Inspect proof loading as required by the contract documents
6. Verify use of required mix design	OBSERVE	Verify that all mixes used comply with the approved construction documents
7. Prior to concrete placement, fabricate specimens for strength tests, perform slump and air content tests, and determine the temperature of the concrete	**CONTINUOUS**	At the time fresh concrete is sampled to fabricate specimens for strength test verify these tests are performed by qualified technicians.
8. Inspect concrete and/or shotcrete placement for proper application techniques	**CONTINUOUS**	Verify proper application techniques are used during concrete conveyance and depositing avoids segregation or contamination. Verify that concrete is properly consolidated.
9. Verify maintenance of specified curing temperature and technique	OBSERVE	Inspect curing, cold weather protection, and hot weather protection procedures.
10. Pre-stressed concrete	**CONTINUOUS**	Verify application of prestressing forces and grouting of bonded prestressing tendons.

CONTINUED ON FOLLOWING PAGE

[1] **OBSERVE**: Observe these items on a random sampling basis daily to insure that applicable requirements are met. Operations need not be delayed pending these inspections at contractor's risk.
DOCUMENT: Document in a report that the work has been performed as required. This is in addition to all other required reports.
CONTINUOUS: Constant monitoring of identified tasks by a special inspector over the duration of performance of said tasks.

K. STRUCTURAL - CONCRETE CONSTRUCTION (CONTINUED)

CONCRETE CONSTRUCTION, INCLUDING COMPOSITE DECK – VERIFY THE FOLLOWING ARE IN COMPLIANCE IBC TABLE 1705.3 (ACI 318 REFERENCES NOTED IN IBC TABLE)		
TASK	INSPECTION TYPE [1]	DESCRIPTION
11. Inspect erection of precast concrete members	OBSERVE	
12. Verify in-situ concrete strength, prior to stressing of tendons in post-tensioned concrete and prior to removal of shores and forms from beams and structural slabs.	OBSERVE	
13. Inspect formwork for shape, location and dimensions of the concrete member being formed.	OBSERVE	

END SECTION

[1] **OBSERVE**: Observe these items on a random sampling basis daily to insure that applicable requirements are met. Operations need not be delayed pending these inspections at contractor's risk.
DOCUMENT: Document in a report that the work has been performed as required. This is in addition to all other required reports.
CONTINUOUS: Constant monitoring of identified tasks by a special inspector over the duration of performance of said tasks.

M. STRUCTURAL - MASONRY CONSTRUCTION SECTION (ALL RISK CATEGORIES)

THIS SECTION APPLICABLE IF BOX IS CHECKED: ☒

MASONRY CONSTRUCTION – VERIFY THE FOLLOWING ARE IN COMPLIANCE AT START OF CONSTRUCTION IBC 1705.4 (ACI 530-13 TABLE 3.1.2 & 3.1.3)		
TASK	INSPECTION TYPE [1]	DESCRIPTION
1. Compliance with approved submittals prior to start	OBSERVE	
2. Proportions of site-mixed mortar.	OBSERVE	
3. Grade and type of reinforcement, anchor bolts, and prestressing tendons and anchorages	OBSERVE	
4. Prestressing technique	OBSERVE	
5. Properties of thin bed mortar for AAC masonry	OBSERVE	
MASONRY CONSTRUCTION – VERIFY THE FOLLOWING ARE IN COMPLIANCE PRIOR TO GROUTING IBC 1705.4 (ACI 530-13 TABLE 3.1.2 & 3.1.3)		
TASK	INSPECTION TYPE [1]	DESCRIPTION
6. Grout space	OBSERVE **CONTINUOUS**	**[NOTE: DOR must either delete 'OBSERVE' for Risk Category IV/V, or delete 'CONTINUOUS' for Risk Categories I/II/ III]**
7. Proportions of site-prepared grout and prestressing grout for bonded tendons	OBSERVE	
8. Proportions of site-mixed grout and prestressing grout for bonded tendons	OBSERVE	
9. Placement of masonry units and mortar joints	OBSERVE	
10. Welding of reinforcement	**CONTINUOUS**	
MASONRY CONSTRUCTION – VERIFY THE FOLLOWING ARE IN COMPLIANCE DURING CONSTRUCTION IBC 1705.4 (ACI 530-13 TABLE 3.1.2 & 3.1.3)		
TASK	INSPECTION TYPE [1]	DESCRIPTION
11. Size and location of structural elements is in compliance	OBSERVE	
12. Preparation, construction, and protection of masonry during cold weather (temperature below 40°F (4.4°c) or hot weather (temp above 90°F (32.2°C))	OBSERVE	
13. Application and measurement of prestressing force	**CONTINUOUS**	
14. Placement of grout and prestressing grout for bonded tendons	**CONTINUOUS**	
15. Placement of AAC masonry units and construction of thin bed mortar joints	**CONTINUOUS**	Continuous for first 5000 square feet only (465 square meters).
16. Observe preparation of grout specimens, mortar specimens, and/or prisms	OBSERVE	
17. Type, size and placement of reinforcement, connectors, anchor bolts and prestressing tendons and anchorages, including details of anchorage of masonry to structural members, frames, or other construction	OBSERVE **CONTINUOUS**	**[NOTE: DOR must either delete 'OBSERVE' for Risk Category IV/V, or delete 'CONTINUOUS' for Risk Categories I/II/III]**

END SECTION

[1] **OBSERVE**: Observe these items on a random sampling basis daily to insure that applicable requirements are met. Operations need not be delayed pending these inspections at contractor's risk.
CONTINUOUS: Constant monitoring of identified tasks by a special inspector over the duration of performance of said tasks.

N. STRUCTURAL - WOOD CONSTRUCTION – SPECIALTY ITEMS SECTION

THIS SECTION APPLICABLE IF BOX IS CHECKED: ☒

WOOD CONSTRUCTION – VERIFY THE FOLLOWING ARE IN COMPLIANCE IBC 1705.5		
TASK	INSPECTION TYPE [1]	DESCRIPTION
1. High-load diaphragms where applicable	OBSERVE	Verify thickness and grade of sheathing, size of framing members at panel edges, nail diameters and length, and the number of fastener lines and that fastener spacing is per approved contract documents.
2. Metal-plate connected wood trusses spanning 60 feet or greater	OBSERVE	Verify that the temporary installation restraint/bracing and the permanent individual truss member restraint/bracing are installed in accordance with the approved truss submittal package

END SECTION

O. STRUCTURAL - WOOD CONSTRUCTION - SEISMIC & WIND SECTION

THIS SECTION APPLICABLE IF BOX IS CHECKED: ☒

WOOD CONSTRUCTION SEISMIC AND WIND – VERIFY THE FOLLOWING ARE IN COMPLIANCE IBC 1705.5		
TASK	INSPECTION TYPE [1]	DESCRIPTION
[NOTE: DOR may uncheck this section where sheathing nailing/fasteners (both shearwall and roof) are consistently greater than 4" on center, or if the design wind speed is less than 110 mph (49 meters/sec) AND the seismic design category is A or B]		
1. Nailing, bolting, anchoring and other fastening of elements of the main wind/seismic force-resisting system	OBSERVE	Includes connectors for: shearwall sheathing, roof/floor sheathing, drag struts/collectors, braces, hold downs, roof and floor framing connections to exterior walls.

END SECTION

P. STRUCTURAL – ISOLATION AND ENERGY DISSIPATION SYSTEMS SECTION

THIS SECTION APPLICABLE IF BOX IS CHECKED: ☒

ISOLATION AND ENERGY DISSIPATION SYSTEMS – VERIFY THE FOLLOWING ARE IN COMPLIANCE IBC TABLE 1705.2.3		
TASK	INSPECTION TYPE [1]	DESCRIPTION
1. Fabrication and installation	OBSERVE	Verify that fabrication and installation of isolator units and energy dissipation devices conform to manufacturer's recommendations and approved construction documents

END SECTION

[1] **OBSERVE**: Observe these items on a random sampling basis daily to insure that applicable requirements are met. Operations need not be delayed pending these inspections at contractor's risk.

Q. GEOTECHNICAL - SOILS INSPECTION SECTION

THIS SECTION APPLICABLE IF BOX IS CHECKED: ☒

SOILS INSPECTION – VERIFY THE FOLLOWING ARE IN COMPLIANCE IBC 1705.6		
TASK	INSPECTION TYPE [1]	DESCRIPTION
1. Materials below shallow foundations are adequate to achieve the design bearing capacity.	OBSERVE	
2. Excavations are extended to proper depth and have reached proper material	OBSERVE	
3. Verify use of proper materials, densities and lift thicknesses during placement and compaction of compacted fill	**CONTINUOUS**	
4. Prior to placement of compacted fill, inspect subgrade and verify that site has been prepared properly.	OBSERVE	During fill placement, the special inspector shall verify that proper materials and procedures are used in accordance with the provisions of the approved geotechnical report

END SECTION

R. GEOTECHNICAL - DRIVEN DEEP FOUNDATION ELEMENTS SECTION

THIS SECTION APPLICABLE IF BOX IS CHECKED: ☒

DEEP DRIVEN FOUNDATION CONSTRUCTION – VERIFY THE FOLLOWING ARE IN COMPLIANCE IBC 1705.5		
TASK	INSPECTION TYPE [1]	DESCRIPTION
1. Verify element materials, sizes and lengths comply with requirements	**CONTINUOUS**	
2. Inspect driving operations and maintain complete and accurate records for each element	**CONTINUOUS**	
3. Verify placement locations and plumbness, confirm type and size of hammer, record number of blows per foot of penetration, determine required penetrations to achiever design capacity, record tip and butt elevations and document ay damage to foundation element	**CONTINUOUS**	

END SECTION

[1] **OBSERVE**: Observe these items on a random sampling basis daily to insure that applicable requirements are met. Operations need not be delayed pending these inspections at contractor's risk.

CONTINUOUS: Constant monitoring of identified tasks by a special inspector over the duration of performance of said tasks.

S. GEOTECHNICAL - HELICAL PILE FOUNDATIONS SECTION

THIS SECTION APPLICABLE IF BOX IS CHECKED: ☒

HELICAL PILE FOUNDATIONS – VERIFY THE FOLLOWING ARE IN COMPLIANCE IBC 1705.9		
TASK	INSPECTION TYPE [1]	DESCRIPTION
1. Record installation equipment used, pile dimensions, tip elevations, final depth, final installation torque and other pertinent installation data. The approved geotechnical report and the contract documents shall be used to determine compliance	**CONTINUOUS**	

END SECTION

T. GEOTECHNICAL - CAST IN PLACE DEEP FOUNDATION ELEMENTS SECTION

THIS SECTION APPLICABLE IF BOX IS CHECKED: ☒

CAST IN PLACE DEEP FOUNDATION ELEMENTS – VERIFY THE FOLLOWING ARE IN COMPLIANCE IBC 1705.8		
TASK	INSPECTION TYPE [1]	DESCRIPTION
1. Inspect drilling operations and maintain complete and accurate records for each element.	**CONTINUOUS**	
2. Verify placement locations and plumbness, confirm element diameters, bell diameters (if applicable), lengths, embedment into bedrock (if applicable and adequate end-bearing strata capacity. Record concrete or grout volumes	**CONTINUOUS**	

END SECTION

[1] **CONTINUOUS:** Constant monitoring of identified tasks by a special inspector over the duration of performance of said tasks.

U. FIRE PROTECTION - SPRAYED FIRE-RESISTANT MATERIALS SECTION

THIS SECTION APPLICABLE IF BOX IS CHECKED: ☒

SPRAYED FIRE RESISTANT MATERIALS – VERIFY THE FOLLOWING ARE IN COMPLIANCE IBC 1705.14		
TASK	INSPECTION TYPE [1]	DESCRIPTION
1. Surface condition	OBSERVE	Prior to application confirm that surface has been prepared per the approved fire-resistance design and manufacturer's instructions.
2. Application	OBSERVE	Prior to application confirm that the substrate meets the minimum ambient temperature per the approved fire-resistance design and manufacturer's instructions.
3. Material thickness	OBSERVE	Verify that the thickness of the SFRM to structural elements is not less than the thickness require by the fire-resistant design in more that 10 percent of the measurement, but in no case less than minimum allowable thickness required by 1705.14.
4. Material density	OBSERVE	Verify that the thickness of the SFRM to structural elements is not less than the thickness require by the fire-resistant design in more than 10 percent of the measurement, but in no case less than minimum allowable thickness required by IBC 1705.14.5
5. Bond strength	OBSERVE	Verify cohesive/adhesive bond strength of the cured SFRM applied to the structural element is not less than 150psf and according to IBC 1705.14.6

END SECTION

V. FIRE PROTECTION - MASTIC AND INTUMESCENT COATINGS SECTION

THIS SECTION APPLICABLE IF BOX IS CHECKED: ☒

MASTIC AND INTUMESCENT FIRE-RESISTANT COATINGS – VERIFY THE FOLLOWING ARE IN COMPLIANCE IBC 1705.15		
TASK	INSPECTION TYPE [1]	DESCRIPTION
1. Surface preparation	OBSERVE	Inspections shall be performed in accordance with AWCI 12-B and the contract documents

END SECTION

W. FIRE PROTECTION – FIRE RESISTANT PENETRATIONS AND JOINTS SECTION

THIS SECTION APPLICABLE IF BOX IS CHECKED: ☒

FIRE RESISTANT PENETRATIONS AND JOINTS – VERIFY THE FOLLOWING ARE IN COMPLIANCE IBC 1705.17		
TASK	INSPECTION TYPE [1]	DESCRIPTION
1. Inspections of penetration firestop systems conducted in accordance with ASTM E 2174.	OBSERVE	**[NOTE: This section applies to Risk Category III, IV, & V only. DOR may choose to uncheck this section where project is assigned to Risk Category I or II. Confirm Risk Category with Structural Engineer]**
2. Inspections of fire-resistant joint systems conducted in accordance with ASTM E 2393	OBSERVE	

END SECTION

[1] **OBSERVE**: Observe these items on a random sampling basis daily to insure that applicable requirements are met. Operations need not be delayed pending these inspections at contractor's risk.

X. FIRE PROTECTION – SMOKE CONTROL SECTION

THIS SECTION APPLICABLE IF BOX IS CHECKED: ☒

SMOKE CONTROL – VERIFY THE FOLLOWING ARE IN COMPLIANCE IBC 1705.17		
TASK	INSPECTION TYPE [1]	DESCRIPTION
1. Verify device locations and perform leakage testing	OBSERVE	Perform during erection of ductwork and prior to concealment
2. Pressure difference testing, flow measurements and detection and control verification	OBSERVE	Perform prior to occupancy and after sufficient completion

END SECTION

[1] **OBSERVE**: Observe these items on a random sampling basis daily to insure that applicable requirements are met. Operations need not be delayed pending these inspections at contractor's risk.

Y. ARCHITECTURAL - EXTERIOR INSULATION AND FINISH SYSTEMS SECTION

THIS SECTION APPLICABLE IF BOX IS CHECKED: ☒

EXTERIOR INSULATION AND FINISH SYSTEMS (EIFS) – VERIFY THE FOLLOWING ARE IN COMPLIANCE IBC 1705.16		
TASK	INSPECTION TYPE [1]	DESCRIPTION
1. Water resistive barrier coating applied over a sheathing substrate.	OBSERVE	Verify that water resistive barrier coating complies with ASTM E 2570. **[NOTE: not applicable to masonry or concrete wall applications. Uncheck this section in those cases]**

END SECTION

Z. ARCHITECTURAL – ARCHITECTURAL COMPONENTS

THIS SECTION APPLICABLE IF BOX IS CHECKED: ☒

ARCHITECTURAL COMPONENTS – VERIFY THE FOLLOWING ARE IN COMPLIANCE IBC 1705.12.5, 1705.12.7		
TASK	INSPECTION TYPE [1]	DESCRIPTION
[NOTE: This section is not applicable to Seismic Design Categories A, B, & C. Uncheck this section if one of those categories applies. Confirm Seismic Design Category with the structural engineer]		
1. Erection and fastening of exterior cladding and interior and exterior veneer.	OBSERVE	Verify appropriate materials, fasteners and attachment at commencement of work and at completion. **Inspector Note: Inspection not required if height is less than 30 feet or weight is less than 5psf**
2. Interior and exterior non-load bearing walls	OBSERVE	Verify appropriate materials, fasteners and attachment at commencement of work and at completion. **Inspector Note: Inspection not required if height is less than 30 feet. Also, Interior non-load bearing walls need not be inspected if weighing less than 15psf**
3. Access floors	OBSERVE	Verify that anchorage complies with approved construction documents. Inspection of post-installed anchors shall comply with approved ICC-ES report
4. Storage racks	OBSERVE	Verify that anchorage complies with approved construction documents. Inspection of post-installed anchors shall comply with approved ICC-ES report. **Inspector Note: Not required for racks less than 8 feet in height**

END SECTION

[1] **OBSERVE**: Observe these items on a random sampling basis daily to insure that applicable requirements are met. Operations need not be delayed pending these inspections at contractor's risk.

AA. PLUMBING/MECHANICAL/ELECTRICAL DESIGNATED SEISMIC SYSTEMS SECTION

THIS SECTION APPLICABLE IF BOX IS CHECKED: ☒

PLUMBING, MECHANICAL AND ELECTRICAL - DESIGNATED SEISMIC SYSTEMS IBC 1705.12.4		
TASK	INSPECTION TYPE [1]	DESCRIPTION
[NOTE: This section is not applicable to Seismic Design Categories A or B. Uncheck this section if one of those categories applies. Confirm Seismic Design Category with structural engineer]		
1. Designated Seismic Systems equipment verification	OBSERVE	✓ Verify model number and serial number are in conformance with project specific seismic qualification (PSSQ) ✓ Verify Tag ID is correct and installed per specifications
2. Designated Seismic Systems equipment Mounting	OBSERVE	✓ Verify that Anchor Base Bolting is installed per PSSQ ✓ Verify that Equipment Bracing is Installed per PSSQ ✓ Verify that Bracing Attachments are installed per PSSQ
3. Designated Seismic Systems utility Conduit/Piping	OBSERVE	✓ Verify that Conduit/Piping is connected to the equipment per PSSQ (flex or rigid) ✓ Verify that Conduit/Piping is seismically supported independently of equipment and in accordance with PSSQ support requirements
4. Designated Seismic Systems clearance	OBSERVE	✓ Adjacent Equipment – Verify that there is adequate gap to eliminate possibility of pounding ✓ Conduit/Piping - Verify that there is adequate gap to eliminate possibility of pounding

END SECTION

[1] **OBSERVE**: Observe these items on a random sampling basis daily to insure that applicable requirements are met. Operations need not be delayed pending these inspections at contractor's risk.

THIS PAGE HAS BEEN INTENTIONALLY LEFT BLANK

SECTION 01 50 00

TEMPORARY CONSTRUCTION FACILITIES AND CONTROLS
05/18

PART 1 GENERAL

1.1 REFERENCES

The publications listed below form a part of this specification to the extent referenced. The publications are referred to within the text by the basic designation only.

AMERICAN WATER WORKS ASSOCIATION (AWWA)

AWWA C511	(2017) Reduced-Pressure Principle Backflow Prevention Assembly

FOUNDATION FOR CROSS-CONNECTION CONTROL AND HYDRAULIC RESEARCH (FCCCHR)

FCCCHR List	(continuously updated) List of Approved Backflow Prevention Assemblies
FCCCHR Manual	(10th Edition) Manual of Cross-Connection Control

NATIONAL FIRE PROTECTION ASSOCIATION (NFPA)

NFPA 70	(2017; ERTA 1-2 2017; TIA 17-1; TIA 17-2; TIA 17-3; TIA 17-4; TIA 17-5; TIA 17-6; TIA 17-7; TIA 17-8; TIA 17-9; TIA 17-10; TIA 17-11; TIA 17-12; TIA 17-13; TIA 17-14; TIA 17-15; TIA 17-16; TIA 17-17) National Electrical Code
NFPA 241	(2019) Standard for Safeguarding Construction, Alteration, and Demolition Operations

U.S. ARMY CORPS OF ENGINEERS (USACE)

EM 385-1-1	(2014) Safety and Health Requirements Manual

U.S. FEDERAL AVIATION ADMINISTRATION (FAA)

FAA AC 70/7460-1	(2015; Rev L) Obstruction Marking and Lighting

U.S. FEDERAL HIGHWAY ADMINISTRATION (FHWA)

MUTCD	(2015) Manual on Uniform Traffic Control Devices

1.2 SUBMITTALS

Government approval is required for submittals with a "G" designation; submittals not having a "G" designation are for Contractor Quality Control approval. Submittals with an "S" are for inclusion in the Sustainability eNotebook, in conformance to Section 01 33 29 SUSTAINABILITY REPORTING. Submit the following in accordance with Section 01 33 00 SUBMITTAL PROCEDURES:

SD-01 Preconstruction Submittals

Construction Site Plan; G

Traffic Control Plan; G

Haul Road Plan; G

SD-06 Test Reports

Backflow Preventer Tests

SD-07 Certificates

Backflow Tester Certification

Backflow Preventers Certificate of Full Approval

1.3 CONSTRUCTION SITE PLAN

Prior to the start of work, submit a site plan showing the locations and dimensions of temporary facilities (including layouts and details, equipment and material storage area (onsite and offsite), and access and haul routes, avenues of ingress/egress to the fenced area and details of the fence installation. Identify any areas which may have to be graveled to prevent the tracking of mud. Indicate if the use of a supplemental or other staging area is desired. Show locations of safety and construction fences, site trailers, construction entrances, trash dumpsters, temporary sanitary facilities, and worker parking areas.

1.4 BACKFLOW PREVENTERS CERTIFICATE

Certificate of Full Approval from FCCCHR List, University of Southern California, attesting that the design, size and make of each backflow preventer has satisfactorily passed the complete sequence of performance testing and evaluation for the respective level of approval. Certificate of Provisional Approval will not be acceptable.

1.4.1 Backflow Tester Certificate

Prior to testing, submit to the Contracting Officer certification issued by the State or local regulatory agency attesting that the backflow tester has successfully completed a certification course sponsored by the regulatory agency. Tester must not be affiliated with any company participating in any other phase of this Contract.

1.4.2 Backflow Prevention Training Certificate

Submit a certificate recognized by the State or local authority that states the Contractor has completed at least 10 hours of training in

backflow preventer installations. The certificate must be current.

1.5 DOD CONDITION OF READINESS (COR)

DOD will set the Condition of Readiness (COR) based on the weather forecast for sustained winds 50 knots (60mph or 95 km/hr) or greater. Contact the Contracting Officer for the current COR setting.

Monitor weather conditions a minimum of twice a day and take appropriate actions according to the aproved Emergency Plan in the accepted Accident Prevention Plan, EM 385-1-1 Section 01 Emergency Planning and the instructions below.

Unless otherwise directed by the Contracting Officer, comply with:

a. Condition FOUR (Sustained winds of 50 knots or greater expected within 72 hours): Normal daily jobsite cleanup and good housekeeping practices. Collect and store in piles or containers scrap lumber, waste material, and rubbish for removal and disposal at the close of each work day. Maintain the construction site including storage areas, free of accumulation of debris. Stack form lumber in neat piles less than 4 feet high. Remove all debris, trash, or objects that could become missile hazards.

b. Condition THREE (Sustained winds of 50 knots or greater expected within 48 hours): Maintain "Condition FOUR" requirements and commence securing operations necessary for "Condition ONE" which cannot be completed within 18 hours. Cease all routine activities which might interfere with securing operations. Commence securing and stow all gear and portable equipment. Make preparations for securing buildings. Review requirements pertaining to "Condition TWO" and continue action as necessary to attain "Condition THREE" readiness.

c. Condition TWO (Sustained winds of 50 knots or greater expected within 24 hours): Curtail or cease routine activities until securing operation is complete. Reinforce or remove form work and scaffolding. Secure machinery, tools, equipment, materials, or remove from the jobsite. Expend every effort to clear all missile hazards and loose equipment from general base areas.

d. Condition ONE. (Sustained winds of 50 knots or greater expected within 12 hours): Secure the jobsite, and leave Government premises.

PART 2 PRODUCTS

2.1 TEMPORARY SIGNAGE

2.1.1 Bulletin Board

Within 7 calendar days of mobilization on site and prior to the commencement of work activities, provide a clear weatherproof covered bulletin board not less than 36 by 48 inches in size for displaying the Equal Employment Opportunity poster, a copy of the wage decision contained in the contract, Wage Rate Information poster, Safety and Health Information as required by EM 385-1-1 Section 01 and other information approved by the Contracting Officer. Coordinate requirements herein with 01 35 26 GOVERNMENTAL SAFETY REQUIREMENTS.

2.1.2 Project Identification Signs

The requirements for the signs, their content, and location are as specified in Section 01 58 00 PROJECT IDENTIFICATION. Erect signs within 15 days after receipt of the notice to proceed. Correct the data required by the safety sign daily, with light colored metallic or non-metallic numerals.

2.1.3 Warning Signs

Post temporary signs, tags, and labels to give workers and the public adequate warning and caution of construction hazards according to the EM 385-1-1 Section 04. Attach signs to the perimeter fencing every 150 feet warning the public of the presence of contruction hazards. Signs must require unauthorized persons to keep out of the construction site. Correct the data required by safety signs daily.

2.2 TEMPORARY TRAFFIC CONTROL

2.2.1 Haul Roads

Construct access and haul roads necessary for proper prosecution of the work under this contract in accordance with EM 385-1-1 Section 04. Construct with suitable grades and widths; sharp curves, blind corners, and dangerous cross traffic are be avoided. Submit haul road plan for approval. Provide necessary lighting, signs, barricades, and distinctive markings for the safe movement of traffic. The method of dust control, although optional, must be adequate to ensure safe operation at all times. Location, grade, width, and alignment of construction and hauling roads are subject to approval by the Contracting Officer. Lighting must be adequate to assure full and clear visibility for full width of haul road and work areas during any night work operations.

2.2.2 Barricades

Erect and maintain temporary barricades to limit public access to hazardous areas. Whenever safe public access to paved areas such as roads, parking areas or sidewalks is prevented by construction activities or as otherwise necessary to ensure the safety of both pedestrian and vehicular traffic barricades will be required. Securely place barricades clearly visible with adequate illumination to provide sufficient visual warning of the hazard during both day and night.

2.3 FENCING

Provide fencing along the construction site and at all open excavations and tunnels to control access by unauthorized personnel. Safety fencing must be highly visible to be seen by pedestrians and vehicular traffic. Specific fencing requirements are as described herein. All fencing will meet the requirements of EM 385-1-1.

2.3.1 Polyethylene Mesh Safety Fencing

Temporary safety fencing must be a high visibility orange colored, high density polyethylene grid, a minimum of 48 inches high and maximum mesh size of 2 inches. Fencing must extend from the grade to a minimum of 48 inches above the grade and be tightly secured to T-posts spaced as necessary to maintain a rigid and taut fence. Fencing must remain rigid and taut with a minimum of 200 pounds of force exerted on it from any direction with less than 4 inches of deflection.

2.3.2 Chain Link Panel Fencing

Temporary panel fencing must be galvanized steel chain link panels 8 feet high. Multiple fencing panels may be linked together at the bases toform long spens as needed. Each panel base must be weighted down using sand bags or other suitable materials in order for the fencing to withstand anticipated winds while remaining upright. Fencing must remain rigid and taut with a minimum of 200 pounds of force exerted on it from any direction with less than 4 inches of deflection.

2.3.3 Post-Driven Chain Link Fencing

Temporary post-driven fencing must be galvanized chain link fencing 8 feet high supported by an tightly secured to galvanized steel posts driven below grade. Fence posts must be located on minimum 10 foot centers. Posts may be set in various sufaces such as sand, soil, ashpalt or concrete as necessary. Chain link fencing must remain rigid and taut with a minimum of 200 pounds of force exerted on it from any direction with less than 4 inches of deflection. Fencing and posts must be completely removed at the completion of construction and any surfaces disturbed or damaged must be restored to its original condition. Underground utilities must be located and identified prior to setting fence posts. Fence must be equipped with a lockable gate. Gate must remain locked when construction personnel are not present.

2.4 TEMPORARY WIRING

Provide temporary wiring in accordance with EM 385-1-1 Section 11, NFPA 241 and NFPA 70. Include monthly inspection and testing of all equipment and apparatus.

2.5 BACKFLOW PREVENTERS

Reduced pressure principle type conforming to the applicable requirements AWWA C511. Provide backflow preventers complete with 150 pound flanged cast iron, bronze mounted gate valve and strainer, 304 stainless steel or bronze, internal parts. The particular make, model/design, and size of backflow preventers to be installed must be included in the latest edition of the List of Approved Backflow Prevention Assemblies issued by the FCCCHR List and be accompanied by a Certificate of Full Approval from FCCCHR List. After installation conduct Backflow Preventer Tests and provide test reports verifying that the installation meets the FCCCHR Manual Standards.

PART 3 EXECUTION

3.1 EMPLOYEE PARKING

Construction contract employees will park privately owned vehicles in an area designated by the Contracting Officer. This area will be within reasonable walking distance of the construction site. Employee parking must not interfere with existing and established parking requirements of the government installation.

3.2 TEMPORARY BULLETIN BOARD

Locate the bulletin board at the project site in a conspicuous place easily accessible to all employees, as approved by the Contracting Officer.

3.3 AVAILABILITY AND USE OF UTILITY SERVICES

3.3.1 Temporary Utilities

Provide temporary utilities required for construction. Materials may be new or used, must be adequate for the required usage, not create unsafe conditions, and not violate applicable codes and standards.

3.3.2 Payment for Utility Services

a. The Government will make all reasonably required utilities available from existing outlets and supplies, as specified in the contract. Unless otherwise provided in the contract, the amount of each utility service consumed will be charged to or paid at prevailing rates charged to the Government or, where the utility is produced by the Government, at reasonable rates determined by the Contracting Officer. Carefully conserve any utilities furnished without charge.

b. Reasonable amounts of the following utilities will be made available at the prevailing rates.

Utility Services		
	Cost ($) per	Unit
Electricity		
Potable Water		
Salt Water		
Compressed Air		
Steam		
Natural Gas		
Sanitary Sewer		

c. The point at which the Government will deliver such utilities or services and the quantity available is as indicated. Pay all costs incurred in connecting, converting, and transferring the utilities to the work. Make connections, including providing backflow-preventing devices on connections to domestic water lines; providing meters; and providing transformers; and make disconnections. Under no circumstances will taps to base fire hydrants be allowed for obtaining domestic water.

3.3.3 Meters and Temporary Connections

Provide and maintain necessary temporary connections, distribution lines, and meter bases (Government will provide meters) required to measure the amount of each utility used for the purpose of determining charges. Notify the Contracting Officer, in writing, 5 working days before final electrical connection is desired so that a utilities contract can be established. The Government will provide a meter and make the final hot connection after inspection and approval of the Contractor's temporary wiring installation. Do not make the final electrical connection.

3.3.4 Advance Deposit

An advance deposit for utilities consisting of an estimated month's usage or a minimum of $50.00 will be required. The last monthly bills for the fiscal year will normally be offset by the deposit and adjustments will be billed or returned as appropriate. Services to be rendered for the next fiscal year, beginning 1 October, will require a new deposit. Notification of the due date for this deposit will be mailed prior to the end of the current fiscal year.

3.3.5 Final Meter Reading

Before completion of the work and final acceptance of the work by the Government, notify the Contracting Officer, in writing, 5 working days before termination is desired. The Government will take a final meter reading, disconnect service, and remove the meters. Then remove all the temporary distribution lines, meter bases, and associated paraphernalia. Pay all outstanding utility bills before final acceptance of the work by the Government.

3.3.6 Utilities at Special Locations

b. Reasonable amounts of utilities will be made available without charge. Make connections, provide transformers and meters, make disconnections; and provide backflow preventer devices on connections to domestic water lines. Under no circumstances will taps to base fire hydrants be allowed for obtaining domestic water.

Reasonable amounts of utilities will be made available at the prevailing Government rates and may be obtained upon application to the Base Maintenance Officer, Bldg. 1202, Marine Corps Base, Camp Lejeune. A refundable security deposit to the Resident Officer in Charge of Construction shall be made prior to application for services. Provide transformers, meter bases, electrical service poles and drops for electrical services, and backflow preventer devices on connections to domestic water lines. Final taps and tie-ins to the Government utility grid will be made by Base Maintenance who will also provide and seal a 120 or 208 volt, three-wire kWh meter. Tap-in cost, if any, shall be the responsibility of the Contractor. Tampering or movement of a sealed meter without notification to base maintenance is grounds for discontinuance of electrical service. Provide larger meters required if they are not available from the Government. The Contractor is responsible for the cost of utility services required until the date of Government acceptance. Under no circumstances will taps to base fire hydrants be allowed for obtaining domestic water.

3.3.7 Sanitation

a. Provide and maintain within the construction area minimum field-type sanitary facilities approved by the Contracting Officer and periodically empty wastes into a municipal, district, or station sanitary sewage system, or remove waste to a commercial facility. Obtain approval from the system owner prior to discharge into any municipal, district, or commercial sanitary sewer system. Any penalties or fines associated with improper discharge will be the responsibility of the Contractor. Coordinate with the Contracting

Officer and follow station regulations and procedures when discharging into the station sanitary sewer system. Maintain these conveniences at all times. Include provisions for pest control and elimination of odors. Government toilet facilities will not be available to Contractor's personnel.

3.3.8 Telephone

Make arrangements and pay all costs for telephone facilities desired.

3.3.9 Obstruction Lighting of Cranes

Provide a minimum of 2 aviation red or high intensity white obstruction lights on temporary structures (including cranes) over 100 feet above ground level. Light construction and installation must comply with FAA AC 70/7460-1. Lights must be operational during periods of reduced visibility, darkness, and as directed by the Contracting Officer.

3.3.10 Fire Protection

Provide temporary fire protection equipment for the protection of personnel and property during construction. Remove debris and flammable materials daily to minimize potential hazards.

3.4 TRAFFIC PROVISIONS

3.4.1 Maintenance of Traffic

a. Conduct operations in a manner that will not close any thoroughfare or interfere in any way with traffic on railways or highways except with written permission of the Contracting Officer at least 15 calendar days prior to the proposed modification date, and provide a Traffic Control Plan detailing the proposed controls to traffic movement for approval. The plan must be in accordance with State and local regulations and the MUTCD, Part VI. . Contractor may move oversized and slow-moving vehicles to the worksite provided requirements of the highway authority have been met.

b. Conduct work so as to minimize obstruction of traffic, and maintain traffic on at least half of the roadway width at all times. Obtain approval from the Contracting Officer prior to starting any activity that will obstruct traffic.

c. Provide, erect, and maintain, at contractors expense, lights, barriers, signals, passageways, detours, and other items, that may be required by the Life Safety Signage, overhead protection authority having jurisdiction.

3.4.2 Protection of Traffic

Maintain and protect traffic on all affected roads during the construction period except as otherwise specifically directed by the Contracting Officer. Measures for the protection and diversion of traffic, including the provision of watchmen and flagmen, erection of barricades, placing of lights around and in front of equipment the work, and the erection and maintenance of adequate warning, danger, and direction signs, will be as required by the State and local authorities having jurisdiction. Protect

the traveling public from damage to person and property. Minimize the interference with public traffic on roads selected for hauling material to and from the site. Investigate the adequacy of existing roads and their allowable load limit. Contractor is responsible for the repair of any damage to roads caused by construction operations.

3.4.3 Rush Hour Restrictions

Do not interfere with the peak traffic flows preceding and during normal operations for without notification to and approval by the Contracting Officer.

3.4.4 Dust Control

Dust control methods and procedures must be approved by the Contracting Officer. Coordinate dust control methods with 01 57 19 TEMPORARY ENVIRONMENTAL CONTROLS.

3.5 CONTRACTOR'S TEMPORARY FACILITIES

Contractor-owned or -leased trailers must be identified by Government assigned numbers. Size and location of the number will comply with Goverment. Apply the number to the trailer within 14 calendar days of notification, or sooner, if directed by the Government. Temporary facilities will meet requirements as identified in EM 385-1-1 Section 04.

3.5.1 Safety Systems

Protect the integrity of any installed safety systems or personnel safety devices. Obtain prior approval from Contracting Officer if entrance into systems serving safety devices is required. If it is temporarily necessary to remove or disable personnel safety devices in order to accomplish contract requirements, provide alternative means of protection prior to removing or disabling any permanently installed safety devices or equipment and obtain approval from the Contracting Officer.

3.5.2 Administrative Field Offices

Provide and maintain administrative field office facilities within the construction area at the designated site. Government office and warehouse facilities will not be available to the Contractor's personnel.

3.5.3 Storage Area

Construct a temporary 6 foot high chain link fence around trailers and materials. Include plastic strip inserts, colored green, so that visibility through the fence is obstructed. Fence posts may be driven, in lieu of concrete bases, where soil conditions permit. Do not place or store trailers, materials, or equipment outside the fenced area unless such trailers, materials, or equipment are assigned a separate and distinct storage area by the Contracting Officer away from the vicinity of the construction site but within the installation boundaries. Trailers, equipment, or materials must not be open to public view with the exception of those items which are in support of ongoing work on any given day. Do not stockpile materials outside the fence in preparation for the next day's work. Park mobile equipment, such as tractors, wheeled lifting equipment, cranes, trucks, and like equipment within the fenced area at the end of each work day.

3.5.4 Supplemental Storage Area

Upon request, and pending availability, the Contracting Officer will designate another or supplemental area for the use and storage of trailers, equipment, and materials. This area may not be in close proximity of the construction site but will be within the installation boundaries. The area will be maintained in an clean and orderly fashion and secured if needed to protect supplies and equipment. Utilities will not be provided to this area by the Government.

3.5.5 Appearance of Trailers

a. Trailers which are rusted, have peeling paint or are otherwise in need of repair will not be allowed on Installation property. Trailers must present a clean and neat exterior appearance and be in a state of good repair.

b. and maintain the temporary facilities. Failure to do so will be sufficient reason to require their removal.

3.5.6 Maintenance of Storage Area

a. Keep fencing in a state of good repair and proper alignment. Grassed or unpaved areas, which are not established roadways, and will be traversed with construction equipment or other vehicles, will be covered with a layer of gravel as necessary to prevent rutting and the tracking of mud onto paved or established roadways, should the Contractor elect to traverse them with construction equipment or other vehicles. Mow and maintain grass located within the boundaries of the construction site for the duration of the project. Grass and vegetation along fences, buildings, under trailers, and in areas not accessible to mowers will be edged or trimmed neatly.

3.5.7 New Building

In the event a new building is constructed for the temporary project field office, it will be a minimum 12 feet in width, 16 feet in length and have a minimum of 7 feet headroom. Equip the building with approved electrical wiring, at least one double convenience outlet and the required switches and fuses to provide 110-120 volt power. Provide a work table with stool, desk with chair, two additional chairs, and one legal size file cabinet that can be locked. The building must be waterproof, supplied with a heater, have a minimum of two doors, electric lights, a telephone, a battery operated smoke detector alarm, a sufficient number of adjustable windows for adequate light and ventilation, and a supply of approved drinking water. Approved sanitary facilities must be furnished. Screen the windows and doors and provide the doors with dead bolt type locking devices or a padlock and heavy duty hasp bolted to the door. Door hinge pins will be non-removable. Arrange the windows to open and to be securely fastened from the inside. Protect glass panels in windows by bars or heavy mesh screens to prevent easy access. In warm weather, furnish air conditioning capable of maintaining the office at 50 percent relative humidity and a room temperature 20 degrees F below the outside temperature when the outside temperature is 95 degrees F. Any new building erected for a temporary field office must be maintained during the life of the contract. Unless otherwise directed by the Contracting Officer, remove the building from the site upon completion and acceptance

of the work.

3.5.8 Security Provisions

Provide adequate outside security lighting at the temporary facilities. The Contractor will be responsible for the security of its own equipment.

3.5.9 Storage Size and Location

The roofedopen site available for storage must be confined to the indicated operations area. Contractor to coordinate with Contract Officer for the storage area available at the site.

3.5.10 Weather Protection of Temporary Facilities and Stored Materials

Take necessary precautions to ensure that roof openings and other critical openings in the building are monitored carefully. Take immediate actions required to seal off such openings when rain or other detrimental weather is imminent, and at the end of each workday. Ensure that the openings are completely sealed off to protect materials and equipment in the building from damage.

3.5.10.1 Building and Site Storm Protection

When a warning of gale force winds is issued, take precautions to minimize danger to persons, and protect the work and nearby Government property. Precautions must include, but are not limited to, closing openings; removing loose materials, tools and equipment from exposed locations; and removing or securing scaffolding and other temporary work. Close openings in the work when storms of lesser intensity pose a threat to the work or any nearby Government property.

3.6 PLANT COMMUNICATIONS

Whenever the individual elements of the plant are located so that operation by normal voice between these elements is not satisfactory, install a satisfactory means of communication, such as telephone or other suitable devices and make available for use by Government personnel.

3.7 TEMPORARY PROJECT SAFETY FENCING

As soon as practicable, but not later than 15 days after the date established for commencement of work, furnish and erect temporary project safety fencing at the work site. Maintain the safety fencing during the life of the contract and, upon completion and acceptance of the work, removefrom the work site.

3.8 CLEANUP

Remove construction debris, waste materials, packaging material and the like from the work site daily. Any dirt or mud which is tracked onto paved or surfaced roadways must be cleaned away. Store any salvageable materials resulting from demolition activities within the fenced area described above or at the supplemental storage area. Neatly stack stored materials not in trailers, whether new or salvaged.

3.9 RESTORATION OF STORAGE AREA

Upon completion of the project remove the bulletin board, signs, barricades, haul roads, and any other temporary products from the site.

After removal of trailers, materials, and equipment from within the fenced area, remove the fence. Restore areas used during the performance of the contract to the original or better condition. Remove gravel used to traverse grassed areas and restore the area to its original condition, including top soil and seeding as necessary.

-- End of Section --

SECTION 01 57 19

TEMPORARY ENVIRONMENTAL CONTROLS
11/15

PART 1 GENERAL

1.1 REFERENCES

The publications listed below form a part of this specification to the extent referenced. The publications are referred to within the text by the basic designation only.

U.S. ENVIRONMENTAL PROTECTION AGENCY (EPA)

EPA SW-846	(Third Edition; Update IV) Test Methods for Evaluating Solid Waste: Physical/Chemical Methods

U.S. NATIONAL ARCHIVES AND RECORDS ADMINISTRATION (NARA)

29 CFR 1910.120	Hazardous Waste Operations and Emergency Response
29 CFR 1910.1053	Respirable Crystalline Silica
29 CFR 1926.1153	Respirable Crystalline Silica
40 CFR 50	National Primary and Secondary Ambient Air Quality Standards
40 CFR 60	Standards of Performance for New Stationary Sources
40 CFR 61	National Emission Standards for Hazardous Air Pollutants
40 CFR 63	National Emission Standards for Hazardous Air Pollutants for Source Categories
40 CFR 64	Compliance Assurance Monitoring
40 CFR 112	Oil Pollution Prevention
40 CFR 122.26	Storm Water Discharges (Applicable to State NPDES Programs, see section 123.25)
40 CFR 241	Guidelines for Disposal of Solid Waste
40 CFR 243	Guidelines for the Storage and Collection of Residential, Commercial, and Institutional Solid Waste
40 CFR 258	Subtitle D Landfill Requirements
40 CFR 260	Hazardous Waste Management System: General
40 CFR 261	Identification and Listing of Hazardous

	Waste
40 CFR 261.7	Residues of Hazardous Waste in Empty Containers
40 CFR 262	Standards Applicable to Generators of Hazardous Waste
40 CFR 262.31	Standards Applicable to Generators of Hazardous Waste-Labeling
40 CFR 262.34	Standards Applicable to Generators of Hazardous Waste-Accumulation Time
40 CFR 263	Standards Applicable to Transporters of Hazardous Waste
40 CFR 264	Standards for Owners and Operators of Hazardous Waste Treatment, Storage, and Disposal Facilities
40 CFR 265	Interim Status Standards for Owners and Operators of Hazardous Waste Treatment, Storage, and Disposal Facilities
40 CFR 266	Standards for the Management of Specific Hazardous Wastes and Specific Types of Hazardous Waste Management Facilities
40 CFR 268	Land Disposal Restrictions
40 CFR 273	Standards for Universal Waste Management
40 CFR 273.2	Standards for Universal Waste Management - Batteries
40 CFR 273.4	Standards for Universal Waste Management - Mercury Containing Equipment
40 CFR 273.5	Standards for Universal Waste Management - Lamps
40 CFR 279	Standards for the Management of Used Oil
40 CFR 300	National Oil and Hazardous Substances Pollution Contingency Plan
40 CFR 300.125	National Oil and Hazardous Substances Pollution Contingency Plan - Notification and Communications
40 CFR 355	Emergency Planning and Notification
40 CFR 403	General Pretreatment Regulations for Existing and New Sources of Pollution
40 CFR 745	Lead-Based Paint Poisoning Prevention in Certain Residential Structures

40 CFR 761	Polychlorinated Biphenyls (PCBs) Manufacturing, Processing, Distribution in Commerce, and Use Prohibitions
49 CFR 171	General Information, Regulations, and Definitions
49 CFR 172	Hazardous Materials Table, Special Provisions, Hazardous Materials Communications, Emergency Response Information, and Training Requirements
49 CFR 172.101	Hazardous Material Regulation-Purpose and Use of Hazardous Material Table
49 CFR 173	Shippers - General Requirements for Shipments and Packagings
49 CFR 178	Specifications for Packagings

1.2 DEFINITIONS

1.2.1 Class I and II Ozone Depleting Substance (ODS)

Class I ODS is defined in Section 602(a) of The Clean Air Act. A list of Class I ODS can be found on the EPA website at the following weblink. https://www.epa.gov/ozone-layer-protection/ozone-depleting-substances.

Class II ODS is defined in Section 602(s) of The Clean Air Act. A list of Class II ODS can be found on the EPA website at the following weblink. https://www.epa.gov/ozone-layer-protection/ozone-depleting-substances.

1.2.2 Contractor Generated Hazardous Waste

Contractor generated hazardous waste is materials that, if abandoned or disposed of, may meet the definition of a hazardous waste. These waste streams would typically consist of material brought on site by the Contractor to execute work, but are not fully consumed during the course of construction. Examples include, but are not limited to, excess paint thinners (i.e. methyl ethyl ketone, toluene), waste thinners, excess paints, excess solvents, waste solvents, excess pesticides, and contaminated pesticide equipment rinse water.

1.2.3 Electronics Waste

Electronics waste is discarded electronic devices intended for salvage, recycling, or disposal.

1.2.4 Environmental Pollution and Damage

Environmental pollution and damage is the presence of chemical, physical, or biological elements or agents which adversely affect human health or welfare; unfavorably alter ecological balances of importance to human life; affect other species of importance to humankind; or degrade the environment aesthetically, culturally or historically.

1.2.5 Environmental Protection

Environmental protection is the prevention/control of pollution and

habitat disruption that may occur to the environment during construction. The control of environmental pollution and damage requires consideration of land, water, and air; biological and cultural resources; and includes management of visual aesthetics; noise; solid, chemical, gaseous, and liquid waste; radiant energy and radioactive material as well as other pollutants.

1.2.6 Hazardous Debris

As defined in paragraph SOLID WASTE, debris that contains listed hazardous waste (either on the debris surface, or in its interstices, such as pore structure) in accordance with 40 CFR 261. Hazardous debris also includes debris that exhibits a characteristic of hazardous waste in accordance with 40 CFR 261.

1.2.7 Hazardous Materials

Hazardous materials as defined in 49 CFR 171 and listed in 49 CFR 172.

Hazardous material is any material that: Is regulated as a hazardous material in accordance with 49 CFR 173; or requires a Safety Data Sheet (SDS) in accordance with 29 CFR 1910.120; or during end use, treatment, handling, packaging, storage, transportation, or disposal meets or has components that meet or have potential to meet the definition of a hazardous waste as defined by 40 CFR 261 Subparts A, B, C, or D. Designation of a material by this definition, when separately regulated or controlled by other sections or directives, does not eliminate the need for adherence to that hazard-specific guidance which takes precedence over this section for "control" purposes. Such material includes ammunition, weapons, explosive actuated devices, propellants, pyrotechnics, chemical and biological warfare materials, medical and pharmaceutical supplies, medical waste and infectious materials, bulk fuels, radioactive materials, and other materials such as asbestos, mercury, and polychlorinated biphenyls (PCBs).

1.2.8 Hazardous Waste

Hazardous Waste is any material that meets the definition of a solid waste and exhibit a hazardous characteristic (ignitability, corrosivity, reactivity, or toxicity) as specified in 40 CFR 261, Subpart C, or contains a listed hazardous waste as identified in 40 CFR 261, Subpart D.

1.2.9 Land Application

Land Application means spreading or spraying discharge water at a rate that allows the water to percolate into the soil. No sheeting action, soil erosion, discharge into storm sewers, discharge into defined drainage areas, or discharge into the "waters of the United States" must occur. Comply with federal, state, and local laws and regulations.

1.2.10 Municipal Separate Storm Sewer System (MS4) Permit

MS4 permits are those held by installations to obtain NPDES permit coverage for their stormwater discharges.

1.2.11 National Pollutant Discharge Elimination System (NPDES)

The NPDES permit program controls water pollution by regulating point sources that discharge pollutants into waters of the United States.

1.2.12 Oily Waste

Oily waste are those materials that are, or were, mixed with Petroleum, Oils, and Lubricants (POLs) and have become separated from that POLs. Oily wastes also means materials, including wastewaters, centrifuge solids, filter residues or sludges, bottom sediments, tank bottoms, and sorbents which have come into contact with and have been contaminated by, POLs and may be appropriately tested and discarded in a manner which is in compliance with other state and local requirements.

This definition includes materials such as oily rags, "kitty litter" sorbent clay and organic sorbent material. These materials may be land filled provided that: It is not prohibited in other state regulations or local ordinances; the amount generated is "de minimus" (a small amount); it is the result of minor leaks or spills resulting from normal process operations; and free-flowing oil has been removed to the practicable extent possible. Large quantities of this material, generated as a result of a major spill or in lieu of proper maintenance of the processing equipment, are a solid waste. As a solid waste, perform a hazardous waste determination prior to disposal. As this can be an expensive process, it is recommended that this type of waste be minimized through good housekeeping practices and employee education.

1.2.13 Regulated Waste

Regulated waste are solid wastes that have specific additional federal, state, or local controls for handling, storage, or disposal.

1.2.14 Sediment

Sediment is soil and other debris that have eroded and have been transported by runoff water or wind.

1.2.15 Solid Waste

Solid waste is a solid, liquid, semi-solid or contained gaseous waste. A solid waste can be a hazardous waste, non-hazardous waste, or non-Resource Conservation and Recovery Act (RCRA) regulated waste. Types of solid waste typically generated at construction sites may include:

1.2.15.1 Debris

Debris is non-hazardous solid material generated during the construction, demolition, or renovation of a structure that exceeds 2.5-inch particle size that is: a manufactured object; plant or animal matter; or natural geologic material (for example, cobbles and boulders), broken or removed concrete, masonry, and rock asphalt paving; ceramics; roofing paper and shingles. Inert materials may be reinforced with or contain ferrous wire, rods, accessories and weldments. A mixture of debris and other material such as soil or sludge is also subject to regulation as debris if the mixture is comprised primarily of debris by volume, based on visual inspection.

1.2.15.2 Green Waste

Green waste is the vegetative matter from landscaping, land clearing and grubbing, including, but not limited to, grass, bushes, scrubs, small trees and saplings, tree stumps and plant roots. Marketable trees,

grasses and plants that are indicated to remain, be re-located, or be re-used are not included.

1.2.15.3 Material not regulated as solid waste

Material not regulated as solid waste is nuclear source or byproduct materials regulated under the Federal Atomic Energy Act of 1954 as amended; suspended or dissolved materials in domestic sewage effluent or irrigation return flows, or other regulated point source discharges; regulated air emissions; and fluids or wastes associated with natural gas or crude oil exploration or production.

1.2.15.4 Non-Hazardous Waste

Non-hazardous waste is waste that is excluded from, or does not meet, hazardous waste criteria in accordance with 40 CFR 263.

1.2.15.5 Recyclables

Recyclables are materials, equipment and assemblies such as doors, windows, door and window frames, plumbing fixtures, glazing and mirrors that are recovered and sold as recyclable, wiring, insulated/non-insulated copper wire cable, wire rope, and structural components. It also includes commercial-grade refrigeration equipment with Freon removed, household appliances where the basic material content is metal, clean polyethylene terephthalate bottles, cooking oil, used fuel oil, textiles, high-grade paper products and corrugated cardboard, stackable pallets in good condition, clean crating material, and clean rubber/vehicle tires. Metal meeting the definition of lead contaminated or lead based paint contaminated may not be included as recyclable if sold to a scrap metal company. Paint cans that meet the definition of empty containers in accordance with 40 CFR 261.7 may be included as recyclable if sold to a scrap metal company.

1.2.15.6 Surplus Soil

Surplus soil is existing soil that is in excess of what is required for this work, including aggregates intended, but not used, for on-site mixing of concrete, mortars, and paving. Contaminated soil meeting the definition of hazardous material or hazardous waste is not included and must be managed in accordance with paragraph HAZARDOUS MATERIAL MANAGEMENT.

1.2.15.7 Scrap Metal

This includes scrap and excess ferrous and non-ferrous metals such as reinforcing steel, structural shapes, pipe, and wire that are recovered or collected and disposed of as scrap. Scrap metal meeting the definition of hazardous material or hazardous waste is not included.

1.2.15.8 Wood

Wood is dimension and non-dimension lumber, plywood, chipboard, hardboard. Treated or painted wood that meets the definition of lead contaminated or lead based contaminated paint is not included. Treated wood includes, but is not limited to, lumber, utility poles, crossties, and other wood products with chemical treatment.

1.2.16 Surface Discharge

Surface discharge means discharge of water into drainage ditches, storm sewers, creeks or "waters of the United States". Surface discharges are discrete, identifiable sources and require a permit from the governing agency. Comply with federal, state, and local laws and regulations.

1.2.17 Wastewater

Wastewater is the used water and solids from a community that flow to a treatment plant.

1.2.17.1 Stormwater

Stormwater is any precipitation in an urban or suburban area that does not evaporate or soak into the ground, but instead collects and flows into storm drains, rivers, and streams.

1.2.18 Waters of the United States

Waters of the United States means Federally jurisdictional waters, including wetlands, that are subject to regulation under Section 404 of the Clean Water Act or navigable waters, as defined under the Rivers and Harbors Act.

1.2.19 Wetlands

Wetlands are those areas that are inundated or saturated by surface or groundwater at a frequency and duration sufficient to support, and that under normal circumstances do support, a prevalence of vegetation typically adapted for life in saturated soil conditions.

1.2.20 Universal Waste

The universal waste regulations streamline collection requirements for certain hazardous wastes in the following categories: batteries, pesticides, mercury-containing equipment (for example, thermostats), and lamps (for example, fluorescent bulbs). The rule is designed to reduce hazardous waste in the municipal solid waste (MSW) stream by making it easier for universal waste handlers to collect these items and send them for recycling or proper disposal. These regulations can be found at 40 CFR 273.

1.3 SUBMITTALS

Government approval is required for submittals with a "G" designation; submittals not having a "G" designation are for Contractor Quality Control approval. Submittals with an "S" are for inclusion in the Sustainability eNotebook, in conformance with Section 01 33 29 SUSTAINABILITY REPORTING. Submit the following in accordance with Section 01 33 00 SUBMITTAL PROCEDURES:

SD-01 Preconstruction Submittals

Preconstruction Survey

Solid Waste Management Permit; G

Regulatory Notifications; G

Environmental Protection Plan; G

Stormwater Pollution Prevention Plan (SWPPP); G

Stormwater Notice of Intent (for NPDES coverage under the general permit for construction activities); G

Dirt and Dust Control Plan; G

Employee Training Records; G

Environmental Manager Qualifications; G

SD-06 Test Reports

Laboratory Analysis

Inspection Reports

Monthly Solid Waste Disposal Report; G

SD-07 Certificates

Employee Training Records; G

ECATTS Certificate Of Completion; G

Erosion and Sediment Control Inspector Qualifications

SD-11 Closeout Submittals

Stormwater Pollution Prevention Plan Compliance Notebook; G

Stormwater Notice of Termination (for NPDES coverage under the general permit for construction activities); G

Waste Determination Documentation; G

Disposal Documentation for Hazardous and Regulated Waste; G

Assembled Employee Training Records; G

Solid Waste Management Permit; G

Project Solid Waste Disposal Documentation Report; G

Contractor Hazardous Material Inventory Log; G

Hazardous Waste/Debris Management; G

Regulatory Notifications; G

Sales Documentation; G

Contractor Certification

As-Built Topographic Survey

1.4 ENVIRONMENTAL PROTECTION REQUIREMENTS

Provide and maintain, during the life of the contract, environmental protection as defined. Plan for and provide environmental protective measures to control pollution that develops during construction practice. Plan for and provide environmental protective measures required to correct conditions that develop during the construction of permanent or temporary environmental features associated with the project. Protect the environmental resources within the project boundaries and those affected outside the limits of permanent work during the entire duration of this Contract. Comply with federal, state, and local regulations pertaining to the environment, including water, air, solid waste, hazardous waste and substances, oily substances, and noise pollution.

Tests and procedures assessing whether construction operations comply with Applicable Environmental Laws may be required. Analytical work must be performed by qualified laboratories; and where required by law, the laboratories must be certified.

1.4.1 Training in Environmental Compliance Assessment Training and Tracking System (ECATTS)

1.4.1.1 Personnel Requirements

The Environmental Manager is responsible for environmental compliance on projects. The Environmental Manager, must complete applicable ECATTS training modules (installation specific or general) prior to starting respective portions of on-site work under this Contract. If personnel changes occur for any of these positions after starting work, replacement personnel must complete applicable ECATTS training within 14 days of assignment to the project.

1.4.1.2 Certification

Submit an ECATTS certificate of completion for personnel who have completed the required ECATTS training. This training is web-based and can be accessed from any computer with Internet access using the following instructions.

Register for NAVFAC Environmental Compliance Assessment, Training, and Tracking System, by logging on to https://environmentaltraining.ecatts.com/. Obtain the password for registration from the Contracting Officer.

1.4.1.3 Refresher Training

This training has been structured to allow contractor personnel to receive credit under this contract and to carry forward credit to future contracts. Ensure the Environmental Manager review their training plans for new modules or updated training requirements prior to beginning work. Some training modules are tailored for specific state regulatory requirements; therefore, Contractors working in multiple states will be required to retake modules tailored to the state where the contract work is being performed.

1.4.2 Conformance with the Environmental Management System

Perform work under this contract consistent with the policy and objectives identified in the installation's Environmental Management System (EMS). Perform work in a manner that conforms to objectives and targets of the environmental programs and operational controls identified by the EMS. Support Government personnel when environmental compliance and EMS audits

are conducted by escorting auditors at the Project site, answering questions, and providing proof of records being maintained. Provide monitoring and measurement information as necessary to address environmental performance relative to environmental, energy, and transportation management goals. In the event an EMS nonconformance or environmental noncompliance associated with the contracted services, tasks, or actions occurs, take corrective and preventative actions. In addition, employees must be aware of their roles and responsibilities under the installation EMS and of how these EMS roles and responsibilities affect work performed under the contract.

Coordinate with the installation's EMS coordinator to identify training needs associated with environmental aspects and the EMS, and arrange training or take other action to meet these needs. Provide training documentation to the Contracting Officer. The Installation Environmental Office will retain associated environmental compliance records. Make EMS Awareness training completion certificates available to Government auditors during EMS audits and include the certificates in the Employee Training Records. See paragraph EMPLOYEE TRAINING RECORDS.

1.5 SPECIAL ENVIRONMENTAL REQUIREMENTS

Comply with the special environmental requirements listed here and attached at the end of this section.

1.6 QUALITY ASSURANCE

1.6.1 Preconstruction Survey and Protection of Features

This paragraph supplements the Contract Clause PROTECTION OF EXISTING VEGETATION, STRUCTURES, EQUIPMENT, UTILITIES, AND IMPROVEMENTS. Prior to start of any onsite construction activities, perform a Preconstruction Survey of the project site with the Contracting Officer, and take photographs showing existing environmental conditions in and adjacent to the site. Submit a report for the record. Include in the report a plan describing the features requiring protection under the provisions of the Contract Clauses, which are not specifically identified on the drawings as environmental features requiring protection along with the condition of trees, shrubs and grassed areas immediately adjacent to the site of work and adjacent to the Contractor's assigned storage area and access route(s), as applicable. The Contractor and the Contracting Officer will sign this survey report upon mutual agreement regarding its accuracy and completeness. Protect those environmental features included in the survey report and any indicated on the drawings, regardless of interference that their preservation may cause to the work under the Contract.

1.6.2 Regulatory Notifications

Provide regulatory notification requirements in accordance with federal, state and local regulations. In cases where the Government will also provide public notification (such as stormwater permitting), coordinate with the Contracting Officer. Submit copies of regulatory notifications to the Contracting Officer at least 30 days prior to commencement of work activities. Typically, regulatory notifications must be provided for the following (this listing is not all-inclusive): demolition, renovation, NPDES defined site work, construction, removal or use of a permitted air emissions source, and remediation of controlled substances (asbestos, hazardous waste, lead paint).

1.6.3 Environmental Brief

Attend an environmental brief to be included in the preconstruction meeting. Provide the following information: types, quantities, and use of hazardous materials that will be brought onto the installation; and types and quantities of wastes/wastewater that may be generated during the Contract. Discuss the results of the Preconstruction Survey at this time.

Prior to initiating any work on site, meet with the Contracting Officer and installation Environmental Office to discuss the proposed Environmental Protection Plan (EPP). Develop a mutual understanding relative to the details of environmental protection, including measures for protecting natural and cultural resources, required reports, required permits, permit requirements (such as mitigation measures), and other measures to be taken.

1.6.4 Environmental Manager

Appoint in writing an Environmental Manager for the project site. The Environmental Manager is directly responsible for coordinating contractor compliance with federal, state, local, and installation requirements. The Environmental Manager must ensure compliance with Hazardous Waste Program requirements (including hazardous waste handling, storage, manifesting, and disposal); implement the EPP; ensure environmental permits are obtained, maintained, and closed out; ensure compliance with Stormwater Program requirements; ensure compliance with Hazardous Materials (storage, handling, and reporting) requirements; and coordinate any remediation of regulated substances (lead, asbestos, PCB transformers). This can be a collateral position; however, the person in this position must be trained to adequately accomplish the following duties: ensure waste segregation and storage compatibility requirements are met; inspect and manage Satellite Accumulation areas; ensure only authorized personnel add wastes to containers; ensure Contractor personnel are trained in 40 CFR requirements in accordance with their position requirements; coordinate removal of waste containers; and maintain the Environmental Records binder and required documentation, including environmental permits compliance and close-out. Submit Environmental Manager Qualifications to the Contracting Officer.

1.6.5 Employee Training Records

Prepare and maintain Employee Training Records throughout the term of the contract meeting applicable 40 CFR requirements. Provide Employee Training Records in the Environmental Records Binder. Ensure every employee completes a program of classroom instruction or on-the-job training that teaches them to perform their duties in a way that ensures compliance with federal, state and local regulatory requirements for RCRA Large Quantity Generator. Provide a Position Description for each employee, by subcontractor, based on the Davis-Bacon Wage Rate designation or other equivalent method, evaluating the employee's association with hazardous and regulated wastes. This Position Description will include training requirements as defined in 40 CFR 265 for a Large Quantity Generator facility. Submit these Assembled Employee Training Records to the Contracting Officer at the conclusion of the project, unless otherwise directed.

Train personnel to meet state requirements. Conduct environmental protection/pollution control meetings for personnel prior to commencing construction activities. Contact additional meetings for new personnel

and when site conditions change. Include in the training and meeting agenda: methods of detecting and avoiding pollution; familiarization with statutory and contractual pollution standards; installation and care of devices, vegetative covers, and instruments required for monitoring purposes to ensure adequate and continuous environmental protection/pollution control; anticipated hazardous or toxic chemicals or wastes, and other regulated contaminants; recognition and protection of archaeological sites, artifacts, waters of the United States, and endangered species and their habitat that are known to be in the area. Provide copy of the Erosion and Sediment Control Inspector Certification as required by state.

1.6.6 Non-Compliance Notifications

The Contracting Officer will notify the Contractor in writing of any observed noncompliance with federal, state or local environmental laws or regulations, permits, and other elements of the Contractor's EPP. After receipt of such notice, inform the Contracting Officer of the proposed corrective action and take such action when approved by the Contracting Officer. The Contracting Officer may issue an order stopping all or part of the work until satisfactory corrective action has been taken. FAR 52.242-14 Suspension of Work provides that a suspension, delay, or interruption of work due to the fault or negligence of the Contractor allows for no adjustments to the contract for time extensions or equitable adjustments. In addition to a suspension of work, the Contracting Officer may use additional authorities under the contract or law..

1.7 ENVIRONMENTAL PROTECTION PLAN

The purpose of the EPP is to present an overview of known or potential environmental issues that must be considered and addressed during construction. Incorporate construction related objectives and targets from the installation's EMS into the EPP. Include in the EPP measures for protecting natural and cultural resources, required reports, and other measures to be taken. Meet with the Contracting Officer or Contracting Officer Representative to discuss the EPP and develop a mutual understanding relative to the details for environmental protection including measures for protecting natural resources, required reports, and other measures to be taken. Submit the EPP within 15 days after Contract award and not less than 10 days before the preconstruction meeting. Revise the EPP throughout the project to include any reporting requirements, changes in site conditions, or contract modifications that change the project scope of work in a way that could have an environmental impact. No requirement in this section will relieve the Contractor of any applicable federal, state, and local environmental protection laws and regulations. During Construction, identify, implement, and submit for approval any additional requirements to be included in the EPP. Maintain the current version onsite.

The EPP includes, but is not limited to, the following elements:

1.7.1 General Overview and Purpose

1.7.1.1 Descriptions

A brief description of each specific plan required by environmental permit or elsewhere in this Contract such as stormwater pollution prevention plan, spill control plan, solid waste management plan, wastewater management plan, air pollution control plan, contaminant prevention plan,

a historical, archaeological, cultural resources, biological resources and wetlands plan, traffic control plan Non-Hazardous Solid Waste Disposal Plan borrowing material plan.

1.7.1.2 Duties

The duties and level of authority assigned to the person(s) on the job site who oversee environmental compliance, such as who is responsible for adherence to the EPP, who is responsible for spill cleanup and training personnel on spill response procedures, who is responsible for manifesting hazardous waste to be removed from the site (if applicable), and who is responsible for training the Contractor's environmental protection personnel.

1.7.1.3 Procedures

A copy of any standard or project-specific operating procedures that will be used to effectively manage and protect the environment on the project site.

1.7.1.4 Communications

Communication and training procedures that will be used to convey environmental management requirements to Contractor employees and subcontractors.

1.7.1.5 Contact Information

Emergency contact information contact information (office phone number, cell phone number, and e-mail address).

1.7.2 General Site Information

1.7.2.1 Drawings

Drawings showing locations of proposed temporary excavations or embankments for haul roads, stream crossings, jurisdictional wetlands, material storage areas, structures, sanitary facilities, storm drains and conveyances, and stockpiles of excess soil.

1.7.2.2 Work Area

Work area plan showing the proposed activity in each portion of the area and identify the areas of limited use or nonuse. Include measures for marking the limits of use areas, including methods for protection of features to be preserved within authorized work areas and methods to control runoff and to contain materials on site, and a traffic control plan.

1.7.2.3 Documentation

A letter signed by an officer of the firm appointing the Environmental Manager and stating that person is responsible for managing and implementing the Environmental Program as described in this contract. Include in this letter the Environmental Manager's authority to direct the removal and replacement of non-conforming work.

1.7.3 Management of Natural Resources

a. Land resources

b. Tree protection

c. Replacement of damaged landscape features

d. Temporary construction

e. Stream crossings

f. Fish and wildlife resources

g. Wetland areas

1.7.4 Protection of Historical and Archaeological Resources

a. Objectives

b. Methods

1.7.5 Stormwater Management and Control

a. Ground cover

b. Erodible soils

c. Temporary measures

(1) Structural Practices

(2) Temporary and permanent stabilization

d. Effective selection, implementation and maintenance of Best Management Practices (BMPs).

1.7.6 Protection of the Environment from Waste Derived from Contractor Operations

Control and disposal of solid and sanitary waste. Control and disposal of hazardous waste.

This item consist of the management procedures for hazardous waste to be generated. The elements of those procedures will coincide with the Installation Hazardous Waste Management Plan. The Contracting Officer will provide a copy of the Installation Hazardous Waste Management Plan. As a minimum, include the following:

a. List of the types of hazardous wastes expected to be generated

b. Procedures to ensure a written waste determination is made for appropriate wastes that are to be generated

c. Sampling/analysis plan, including laboratory method(s) that will be used for waste determinations and copies of relevant laboratory certifications

d. Methods and proposed locations for hazardous waste accumulation/storage (that is, in tanks or containers)

e. Management procedures for storage, labeling, transportation, and disposal of waste (treatment of waste is not allowed unless specifically noted)

f. Management procedures and regulatory documentation ensuring disposal of hazardous waste complies with Land Disposal Restrictions (40 CFR 268)

g. Management procedures for recyclable hazardous materials such as lead-acid batteries, used oil, and similar

h. Used oil management procedures in accordance with 40 CFR 279; Hazardous waste minimization procedures

i. Plans for the disposal of hazardous waste by permitted facilities; and Procedures to be employed to ensure required employee training records are maintained.

1.7.7 Prevention of Releases to the Environment

Procedures to prevent releases to the environment

Notifications in the event of a release to the environment

1.7.8 Regulatory Notification and Permits

List what notifications and permit applications must be made. Some permits require up to 180 days to obtain. Demonstrate that those permits have been obtained or applied for by including copies of applicable environmental permits. The EPP will not be approved until the permits have been obtained.

1.7.9 Clean Air Act Compliance

1.7.9.1 Haul Route

Submit truck and material haul routes along with a Dirt and Dust Control Plan for controlling dirt, debris, and dust on Installation roadways. As a minimum, identify in the plan the subcontractor and equipment for cleaning along the haul route and measures to reduce dirt, dust, and debris from roadways.

1.7.9.2 Pollution Generating Equipment

Identify air pollution generating equipment or processes that may require federal, state, or local permits under the Clean Air Act. Determine requirements based on any current installation permits and the impacts of the project. Provide a list of all fixed or mobile equipment, machinery or operations that could generate air emissions during the project to the Installation Environmental Office (Air Program Manager).

1.7.9.3 Stationary Internal Combustion Engines

Identify portable and stationary internal combustion engines that will be supplied, used or serviced. Comply with 40 CFR 60 Subpart IIII, 40 CFR 60 Subpart JJJJ, 40 CFR 63 Subpart ZZZZ, and local regulations as applicable. At minimum, include the make, model, serial number, manufacture date, size (engine brake horsepower), and EPA emission certification status of each engine. Maintain applicable records and log

hours of operation and fuel use. Logs must include reasons for operation and delineate between emergency and non-emergency operation.

1.7.9.4 Refrigerants

Identify management practices to ensure that heating, ventilation, and air conditioning (HVAC) work involving refrigerants complies with 40 CFR 82 requirements. Technicians must be certified, maintain copies of certification on site, use certified equipment and log work that requires the addition or removal of refrigerant. Any refrigerant reclaimed is the property of the Government, coordinate with the Installation Environmental Office to determine the appropriate turn in location.

1.7.9.5 Air Pollution-engineering Processes

Identify planned air pollution-generating processes and management control measures (including, but not limited to, spray painting, abrasive blasting, demolition, material handling, fugitive dust, and fugitive emissions). Log hours of operations and track quantities of materials used.

1.7.9.6 Compliant Materials

Provide the Government a list of and SDSs for all hazardous materials proposed for use on site. Materials must be compliant with all Clean Air Act regulations for emissions including solvent and volatile organic compound contents, and applicable National Emission Standards for Hazardous Air Pollutants requirements. The Government may alter or limit use of specific materials as needed to meet installation permit requirements for emissions.

1.8 LICENSES AND PERMITS

Obtain licenses and permits required for the construction of the project and in accordance with FAR 52.236-7 Permits and Responsibilities. Notify the Government of all general use permitted equipment the Contractor plans to use on site. This paragraph supplements the Contractor's responsibility under FAR 52.236-7 Permits and Responsibilities.

1.9 ENVIRONMENTAL RECORDS BINDER

Maintain on-site a separate three-ring Environmental Records Binder and submit at the completion of the project. Make separate parts within the binder that correspond to each submittal listed under paragraph CLOSEOUT SUBMITTALS in this section.

1.10 SOLID WASTE MANAGEMENT PERMIT

Provide the Contracting Officer with written notification of the quantity of anticipated solid waste or debris that is anticipated or estimated to be generated by construction. Include in the report the locations where various types of waste will be disposed or recycled. Include letters of acceptance from the receiving location or as applicable; submit one copy of the receiving location state and local Solid Waste Management Permit or license showing such agency's approval of the disposal plan before transporting wastes off Government property.

1.10.1 Monthly Solid Waste Disposal Report

Monthly, submit a solid waste disposal report to the Contracting Officer. For each waste, the report will state the classification (using the definitions provided in this section), amount, location, and name of the business receiving the solid waste.

1.11 FACILITY HAZARDOUS WASTE GENERATOR STATUS

Contractor is designated as a Large Quantity Generator Small Quantity Generator Conditionally Exempt-Small Quantity Generator. Meet the regulatory requirements of this generator designation for any work conducted within the boundaries of this Installation. Comply with provisions of federal, state, and local regulatory requirements applicable to this generator status regarding training and storage, handling, and disposal of construction derived wastes.

PART 2 PRODUCTS

Not Used

PART 3 EXECUTION

3.1 PROTECTION OF NATURAL RESOURCES

Minimize interference with, disturbance to, and damage to fish, wildlife, and plants, including their habitats. Prior to the commencement of activities, consult with the Installation Environmental Office, regarding rare species or sensitive habitats that need to be protected. The protection of rare, threatened, and endangered animal and plant species identified, including their habitats, is the Contractor's responsibility.

Preserve the natural resources within the project boundaries and outside the limits of permanent work. Restore to an equivalent or improved condition upon completion of work that is consistent with the requirements of the Installation Environmental Office or as otherwise specified. Confine construction activities to within the limits of the work indicated or specified.

3.1.1 Flow Ways

Do not alter water flows or otherwise significantly disturb the native habitat adjacent to the project and critical to the survival of fish and wildlife, except as specified and permitted.

3.1.2 Vegetation

Except in areas to be cleared, do not remove, cut, deface, injure, or destroy trees or shrubs without the Contracting Officer's permission. Do not fasten or attach ropes, cables, or guys to existing nearby trees for anchorages unless authorized by the Contracting Officer. Where such use of attached ropes, cables, or guys is authorized, the Contractor is responsible for any resultant damage.

Protect existing trees that are to remain to ensure they are not injured, bruised, defaced, or otherwise damaged by construction operations. Remove displaced rocks from uncleared areas. Coordinate with the Contracting Officer and Installation Environmental Office to determine appropriate action for trees and other landscape features scarred or damaged by equipment operations.

3.1.3 Streams

Stream crossings must allow movement of materials or equipment without violating water pollution control standards of the federal, state, and local governments. Construction of stream crossing structures must be in compliance with any required permits including, but not limited to, Clean Water Act Section 404, and Section 401 Water Quality.

The Contracting Officer's approval and appropriate permits are required before any equipment will be permitted to ford live streams. In areas where frequent crossings are required, install temporary culverts or bridges. Obtain Contracting Officer's approval prior to installation. Remove temporary culverts or bridges upon completion of work, and repair the area to its original condition unless otherwise required by the Contracting Officer.

3.2 STORMWATER

Do not discharge stormwater from construction sites to the sanitary sewer. If the water is noted or suspected of being contaminated, it may only be released to the storm drain system if the discharge is specifically permitted. Obtain authorization in advance from the Installation Environmental Office for any release of contaminated water.

3.2.1 Construction General Permit

Provide a Construction General Permit as required by 40 CFR 122.26 or the State of North Carolina General Permit. Under the terms and conditions of the permit, install, inspect, maintain BMPs, prepare stormwater erosion and sediment control inspection reports, and submit SWPPP inspection reports. Maintain construction operations and management in compliance with the terms and conditions of the general permit for stormwater discharges from construction activities.

3.2.1.1 Stormwater Pollution Prevention Plan

Submit a project-specific Stormwater Pollution Prevention Plan (SWPPP) to the Contracting Officer for approval, prior to the commencement of work. The SWPPP must meet the requirements of 40 CFR 122.26 and the North Carolina State General Permit for stormwater discharges from construction sites.

Include the following:

a. Comply with terms of the state general permit for stormwater discharges from construction activities. Prepare SWPPP in accordance with state requirements.

b. Select applicable BMPs from EPA Fact Sheets located at https://www.epa.gov/npdes/national-menu-best-management-practices-bmps-stormwater# or in accordance with applicable state or local requirements.

c. Include a completed copy of the Notice of Intent, BMP Inspection Report Template, and Stormwater Notice of Termination, except for the effective date.

d. Comply with additional requirements provided in Section 01 57 19.01 20 SUPPLEMENTAL TEMPORARY ENVIRONMENTAL CONTROLS

3.2.1.2 Stormwater Notice of Intent for Construction Activities
Prepare and submit the Notice of Intent for NPDES coverage under the general permit for construction activities to the Contracting Officer for review and approval.

Submit the approved NOI and appropriate permit fees onto the appropriate federal or state agency for approval. No land disturbing activities may commence without permit coverage. Maintain an approved copy of the SWPPP at the onsite construction office, and continually update as regulations require, reflecting current site conditions.

Comply with the additional requirements in Section 01 57 19.01 20 SUPPLEMENTAL TEMPORARY ENVIRONMENTAL CONTROLS.

3.2.1.3 Inspection Reports

Submit "Inspection Reports" to the Contracting Officer in accordance with the State of North CarolinaConstruction General Permit. Provide Inspection Reports in accordance with 01 57 19.01 20 SUPPLEMENTAL TEMPORARY ENVIRONMENTAL CONTROLS.

3.2.1.4 Stormwater Pollution Prevention Plan Compliance Notebook

Create and maintain a three ring binder of documents that demonstrate compliance with the Construction General Permit. Include a copy of the permit Notice of Intent, proof of permit fee payment, SWPPP and SWPPP update amendments, inspection reports and related corrective action records, copies of correspondence with the the North Carolina State Permitting Agency, and a copy of the permit Notice of Termination in the binder. At project completion, the notebook becomes property of the Government. Provide the compliance notebook to the Contracting Officer.

3.2.1.5 Stormwater Notice of Termination for Construction Activities

Submit a Notice of Termination to the Contracting Officer for approval once construction is complete and final stabilization has been achieved on all portions of the site for which the permittee is responsible. Once approved, submit the Notice of Termination to the appropriate state or federal agency. Prepare as-built topographic survey information required by the permitting agency for certification of the stormwater management system, and provide to the Contracting Officer.

3.2.2 Erosion and Sediment Control Measures

Provide erosion and sediment control measures in accordance with state and local laws and regulations. Preserve vegetation to the maximum extent practicable.

Erosion control inspection reports may be compiled as part of a stormwater pollution prevention plan inspection reports.

3.2.2.1 Erosion Control

Prevent erosion by mulching, Compost Blankets, Geotextiles, temporary slope drains,. Stabilize slopes by chemical stabilization, sodding, seeding, or such combination of these methods necessary for effective erosion control. Use of hay bales is prohibited.

Provide seeding in accordance with Section 32 92 23 SODDING.

3.2.2.2 Sediment Control Practices

Implement sediment control practices to divert flows from exposed soils, temporarily store flows, or otherwise limit runoff and the discharge of pollutants from exposed areas of the site. Implement sediment control practices prior to soil disturbance and prior to creating areas with concentrated flow, during the construction process to minimize erosion and sediment laden runoff. Include the following devices: silt fence, temporary diversion dikes, storm drain inlet protection, Location and details of installation and construction are indicated on the drawings.

3.2.3 Work Area Limits

Mark the areas that need not be disturbed under this Contract prior to commencing construction activities. Mark or fence isolated areas within the general work area that are not to be disturbed. Protect monuments and markers before construction operations commence. Where construction operations are to be conducted during darkness, any markers must be visible in the dark. Personnel must be knowledgeable of the purpose for marking and protecting particular objects.

3.2.4 Contractor Facilities and Work Areas

Place field offices, staging areas, stockpile storage, and temporary buildings in areas designated on the drawings or as directed by the Contracting Officer. Move or relocate the Contractor facilities only when approved by the Government. Provide erosion and sediment controls for onsite borrow and spoil areas to prevent sediment from entering nearby waters. Control temporary excavation and embankments for plant or work areas to protect adjacent areas.

3.2.5 Municipal Separate Storm Sewer System (MS4) Management

Comply with the Installation's MS4 permit requirements. Comply with requirements of Section 01 57 19.01 20 SUPPLEMENTAL TEMPORARY ENVIRONMENTAL CONTROLS.

3.3 SURFACE AND GROUNDWATER

3.3.1 Cofferdams, Diversions, and Dewatering

Construction operations for dewatering, removal of cofferdams, tailrace excavation, and tunnel closure must be constantly controlled to maintain compliance with existing state water quality standards and designated uses of the surface water body. Comply with the State of North Carolina water quality standards and anti-degradation provisions. Do not discharge excavation ground water to the sanitary sewer, storm drains, or to surface waters without prior specific authorization in writing from the Installation Environmental Office. Discharge of hazardous substances will not be permitted under any circumstances. Use sediment control BMPs to prevent construction site runoff from directly entering any storm drain or surface waters.

If the construction dewatering is noted or suspected of being contaminated, it may only be released to the storm drain system if the discharge is specifically permitted. Obtain authorization for any contaminated groundwater release in advance from the Installation

Environmental Officer and the federal or state authority, as applicable. Discharge of hazardous substances will not be permitted under any circumstances.

3.3.2 Waters of the United States

Do not enter, disturb, destroy, or allow discharge of contaminants into waters of the United States except as authorized herein. The protection of waters of the United States shown on the drawings in accordance with paragraph LICENSES AND PERMITS is the Contractor's responsibility. Authorization to enter specific waters of the United States identified does not relieve the Contractor from any obligation to protect other waters of the United States within, adjacent to, or in the vicinity of the construction site and associated boundaries.

3.4 PROTECTION OF CULTURAL RESOURCES

3.4.1 Archaeological Resources

If, during excavation or other construction activities, any previously unidentified or unanticipated historical, archaeological, and cultural resources are discovered or found, activities that may damage or alter such resources will be suspended. Resources covered by this paragraph include, but are not limited to: any human skeletal remains or burials; artifacts; shell, midden, bone, charcoal, or other deposits; rock or coral alignments, pavings, wall, or other constructed features; and any indication of agricultural or other human activities. Upon such discovery or find, immediately notify the Contracting Officer so that the appropriate authorities may be notified and a determination made as to their significance and what, if any, special disposition of the finds should be made. Cease all activities that may result in impact to or the destruction of these resources. Secure the area and prevent employees or other persons from trespassing on, removing, or otherwise disturbing such resources. The Government retains ownership and control over archaeological resources.

Protect these resources and be responsible for their preservation during the life of the Contract.

3.5 AIR RESOURCES

Equipment operation, activities, or processes will be in accordance with 40 CFR 64 and state air emission and performance laws and standards.

3.5.1 Preconstruction Air Permits

Notify the Air Program Manager, through the Contracting Officer, at least 6 months prior to bringing equipment, assembled or unassembled, onto the Installation, so that air permits can be secured. Necessary permitting time must be considered in regard to construction activities. Clean Air Act (CAA) permits must be obtained prior to bringing equipment, assembled or unassembled, onto the Installation.

Permits will be provided by the Government.

3.5.2 Oil or Dual-fuel Boilers and Furnaces

Provide product data and details for new, replacement, or relocated fuel fired boilers, heaters, or furnaces to the Installation Environmental

Office (Air Program Manager) through the Contracting Officer. Data to be reported include: equipment purpose (water heater, building heat, process), manufacturer, model number, serial number, fuel type (oil type, gas type) size (MMBTU heat input). Provide in accordance with paragraph PRECONSTRUCTION AIR PERMITS.

3.5.3 Burning

Burning is prohibited on the Government premises.

3.5.4 Class I ODS Prohibition

Class I ODS are Government property and must be returned to the Government for appropriate management. Coordinate with the Installation Environmental Office to determine the appropriate location for turn in of all reclaimed refrigerant.

3.5.5 Accidental Venting of Refrigerant

Accidental venting of a refrigerant is a release and must be reported immediately to the Contracting Officer.

3.5.6 EPA Certification Requirements

Heating and air conditioning technicians must be certified through an EPA-approved program. Maintain copies of certifications at the employees' places of business; technicians must carry certification wallet cards, as provided by environmental law.

3.5.7 Dust Control

Keep dust down at all times, including during nonworking periods. Sprinkle or treat, with dust suppressants, the soil at the site, haul roads, and other areas disturbed by operations. Dry power brooming will not be permitted. Instead, use vacuuming, wet mopping, wet sweeping, or wet power brooming. Air blowing will be permitted only for cleaning nonparticulate debris such as steel reinforcing bars. Only wet cutting will be permitted for cutting concrete blocks, concrete, and bituminous concrete. Do not unnecessarily shake bags of cement, concrete mortar, or plaster. Since these products contain Crystalline Silica, comply with the applicable OSHA standard, 29 CFR 1910.1053 or 29 CFR 1926.1153 for controlling exposure to Crystalline Silica Dust.

3.5.7.1 Particulates

Dust particles, aerosols and gaseous by-products from construction activities, and processing and preparation of materials (such as from asphaltic batch plants) must be controlled at all times, including weekends, holidays, and hours when work is not in progress. Maintain excavations, stockpiles, haul roads, permanent and temporary access roads, plant sites, spoil areas, borrow areas, and other work areas within or outside the project boundaries free from particulates that would exceed 40 CFR 50, state, and local air pollution standards or that would cause a hazard or a nuisance. Sprinkling, chemical treatment of an approved type, baghouse, scrubbers, electrostatic precipitators, or other methods will be permitted to control particulates in the work area. Sprinkling, to be efficient, must be repeated to keep the disturbed area damp. Provide sufficient, competent equipment available to accomplish these tasks. Perform particulate control as the work proceeds and whenever a

particulate nuisance or hazard occurs. Comply with state and local visibility regulations.

3.5.7.2 Abrasive Blasting

Blasting operations cannot be performed without prior approval of the Installation Air Program Manager. The use of silica sand is prohibited in sandblasting.

Provide tarpaulin drop cloths and windscreens to enclose abrasive blasting operations to confine and collect dust, abrasive agent, paint chips, and other debris. Perform work involving removal of hazardous material in accordance with 29 CFR 1910.

3.5.8 Odors

Control odors from construction activities. The odors must be in compliance with state regulations and local ordinances and may not constitute a health hazard.

3.6 WASTE MINIMIZATION

Minimize the use of hazardous materials and the generation of waste. Include procedures for pollution prevention/ hazardous waste minimization in the Hazardous Waste Management Section of the EPP. Obtain a copy of the installation's Pollution Prevention/Hazardous Waste Minimization Plan for reference material when preparing this part of the EPP. If no written plan exists, obtain information by contacting the Contracting Officer. Describe the anticipated types of the hazardous materials to be used in the construction when requesting information.

3.6.1 Salvage, Reuse and Recycle

Identify anticipated materials and waste for salvage, reuse, and recycling. Describe actions to promote material reuse, resale or recycling. To the extent practicable, all scrap metal must be sent for reuse or recycling and will not be disposed of in a landfill.

Include the name, physical address, and telephone number of the hauler, if transported by a franchised solid waste hauler. Include the destination and, unless exempted, provide a copy of the state or local permit (cover) or license for recycling.

3.6.2 Nonhazardous Solid Waste Diversion Report

Maintain an inventory of nonhazardous solid waste diversion and disposal of construction and demolition debris. Submit a report to the Contracting Officer on the first working day after each fiscal year quarter, starting the first quarter that nonhazardous solid waste has been generated. Include the following in the report:

Construction and Demolition (C&D) Debris Disposed	tons
C&D Debris Recycled	tons
C&D Debris Composted	tons
Total C&D Debris Generated	tons
Waste Sent to Waste-To-Energy Incineration Plant (This amount should not be included in the recycled amount)	tons

3.7 WASTE MANAGEMENT AND DISPOSAL

3.7.1 Waste Determination Documentation

Complete a Waste Determination form (provided at the pre-construction conference) for Contractor-derived wastes to be generated. All potentially hazardous solid waste streams that are not subject to a specific exclusion or exemption from the hazardous waste regulations (e.g. scrap metal, domestic sewage) or subject to special rules, (lead-acid batteries and precious metals) must be characterized in accordance with the requirements of 40 CFR 261 or corresponding applicable state or local regulations. Base waste determination on user knowledge of the processes and materials used, and analytical data when necessary. Consult with the Installation environmental staff for guidance on specific requirements. Attach support documentation to the Waste Determination form. As a minimum, provide a Waste Determination form for the following waste (this listing is not inclusive): oil- and latex -based painting and caulking products, solvents, adhesives, aerosols, petroleum products, and containers of the original materials.

3.7.1.1 Sampling and Analysis of Waste

3.7.1.1.1 Waste Sampling

Sample waste in accordance with EPA SW-846. Clearly mark each sampled drum or container with the Contractor's identification number, and cross reference to the chemical analysis performed.

3.7.1.1.2 Laboratory Analysis

Follow the analytical procedure and methods in accordance with the 40 CFR 261. Provide analytical results and reports performed to the Contracting Officer.

3.7.1.1.3 Analysis Type

Identify hazardous waste by analyzing for the following characteristics: ignitability, corrosivity, reactivity, toxicity based on TCLP results, .

3.7.2 Solid Waste Management

3.7.2.1 Project Solid Waste Disposal Documentation Report

Provide copies of the waste handling facilities' weight tickets, receipts, bills of sale, and other sales documentation. In lieu of sales documentation, a statement indicating the disposal location for the solid waste that is signed by an employee authorized to legally obligate or bind the firm may be submitted. The sales documentation Contractor certification must include the receiver's tax identification number and business, EPA or state registration number, along with the receiver's delivery and business addresses and telephone numbers. For each solid waste retained for the Contractor's own use, submit the information previously described in this paragraph on the solid waste disposal report. Prices paid or received do not have to be reported to the Contracting Officer unless required by other provisions or specifications of this Contract or public law.

3.7.2.2 Control and Management of Solid Wastes

Pick up solid wastes, and place in covered containers that are regularly emptied. Do not prepare or cook food on the project site. Prevent contamination of the site or other areas when handling and disposing of wastes. At project completion, leave the areas clean. Employ segregation measures so that no hazardous or toxic waste will become co-mingled with non-hazardous solid waste. Transport solid waste off Government property and dispose of it in compliance with 40 CFR 260, state, and local requirements for solid waste disposal. A Subtitle D RCRA permitted landfill is the minimum acceptable offsite solid waste disposal option. Verify that the selected transporters and disposal facilities have the necessary permits and licenses to operate. Solid waste disposal offsite must comply with most stringent local, state, and federal requirements, including 40 CFR 241, 40 CFR 243, and 40 CFR 258.

Manage hazardous material used in construction, including but not limited to, aerosol cans, waste paint, cleaning solvents, contaminated brushes, and used rags, in accordance with 49 CFR 173.

3.7.3 Control and Management of Hazardous Waste

Do not dispose of hazardous waste on Government property. Do not discharge any waste to a sanitary sewer, storm drain, or to surface waters or conduct waste treatment or disposal on Government property without written approval of the Contracting Officer.

3.7.3.1 Hazardous Waste/Debris Management

Identify construction activities that will generate hazardous waste or debris. Provide a documented waste determination for resultant waste streams. Identify, label, handle, store, and dispose of hazardous waste or debris in accordance with federal, state, and local regulations, including 40 CFR 261, 40 CFR 262, 40 CFR 263, 40 CFR 264, 40 CFR 265, 40 CFR 266, and 40 CFR 268.

Manage hazardous waste in accordance with the approved Hazardous Waste Management Section of the EPP. Store hazardous wastes in approved containers in accordance with 49 CFR 173 and 49 CFR 178. Hazardous waste generated within the confines of Government facilities is identified as being generated by the Government. Prior to removal of any hazardous waste from Government property, hazardous waste manifests must be signed

by personnel from the Installation Environmental Office. Do not bring hazardous waste onto Government property. Provide the Contracting Officer with a copy of waste determination documentation for any solid waste streams that have any potential to be hazardous waste or contain any chemical constituents listed in 40 CFR 372-SUBPART D.

3.7.3.2 Waste Storage/Satellite Accumulation/90 Day Storage Areas

Accumulate hazardous waste at satellite accumulation points and in compliance with 40 CFR 262.34 and applicable state or local regulations. Individual waste streams will be limited to 55 gallons of accumulation (or 1 quart for acutely hazardous wastes). If the Contractor expects to generate hazardous waste at a rate and quantity that makes satellite accumulation impractical, the Contractor may request a temporary 90 day accumulation point be established. Submit a request in writing to the Contracting Officer and provide the following information (Attach Site Plan to the Request):

Contract Number	
Contractor	
Haz/Waste or Regulated Waste POC	
Phone Number	
Type of Waste	
Source of Waste	
Emergency POC	
Phone Number	
Location of the Site	

Attach a Waste Determination form for the expected waste streams. Allow 10 working days for processing this request. Additional compliance requirements (e.g. training and contingency planning) that may be required are the responsibility of the Contractor. Barricade the designated area where waste is being stored and post a sign identifying as follows:

"DANGER - UNAUTHORIZED PERSONNEL KEEP OUT"

3.7.3.3 Hazardous Waste Disposal

3.7.3.3.1 Responsibilities for Contractor's Disposal

Provide hazardous waste manifest to the Installations Environmental Office for review, approval, and signature prior to shipping waste off Government property.

3.7.3.3.1.1 Services

Provide service necessary for the final treatment or disposal of the hazardous material or waste in accordance with 40 CFR 260, local, and state, laws and regulations, and the terms and conditions of the Contract within 60 days after the materials have been generated. These services

include necessary personnel, labor, transportation, packaging, detailed analysis (if required for disposal or transportation, include manifesting or complete waste profile sheets, equipment, and compile documentation).

3.7.3.3.1.2 Samples

Obtain a representative sample of the material generated for each job done to provide waste stream determination.

3.7.3.3.1.3 Analysis

Analyze each sample taken and provide analytical results to the Contracting Officer. See paragraph WASTE DETERMINATION DOCUMENTATION.

3.7.3.3.1.4 Labeling

Determine the Department of Transportation's (DOT's) proper shipping names for waste (each container requiring disposal) and demonstrate to the Contracting Officer how this determination is developed and supported by the sampling and analysis requirements contained herein. Label all containers of hazardous waste with the words "Hazardous Waste" or other words to describe the contents of the container in accordance with 40 CFR 262.31 and applicable state or local regulations.

3.7.3.3.2 Contractor Disposal Turn-In Requirements

Hazardous waste generated must be disposed of in accordance with the following conditions to meet installation requirements:

a. Drums must be compatible with waste contents and drums must meet DOT requirements for 49 CFR 173 for transportation of materials.

b. Band drums to wooden pallets.

c. No more than three 55 gallon drums or two 85 gallon over packs are to be banded to a pallet.

d. Band using 1-1/4 inch minimum band on upper third of drum.

e. Provide label in accordance with 49 CFR 172.101.

f. Leave 3 to 5 inches of empty space above volume of material.

3.7.3.4 Universal Waste Management

Manage the following categories of universal waste in accordance with federal, state, and local requirements and installation instructions:

a. Batteries as described in 40 CFR 273.2

b. Lamps as described in 40 CFR 273.5

c. Mercury-containing equipment as described in 40 CFR 273.4

Mercury is prohibited in the construction of this facility, unless specified otherwise, and with the exception of mercury vapor lamps and fluorescent lamps. Dumping of mercury-containing materials and devices such as mercury vapor lamps, fluorescent lamps, and mercury switches, in

rubbish containers is prohibited. Remove without breaking, pack to prevent breakage, and transport out of the activity in an unbroken condition for disposal as directed.

3.7.3.5 Electronics End-of-Life Management

Recycle or dispose of electronics waste, including, but not limited to, used electronic devices such computers, monitors, hard-copy devices, televisions, mobile devices, in accordance with 40 CFR 260-262, state, and local requirements, and installation instructions.

3.7.3.6 Disposal Documentation for Hazardous and Regulated Waste

Contact the Contracting Officer for the facility RCRA identification number that is to be used on each manifest.

Submit a copy of the applicable EPA and or state permit(s), manifest(s), or license(s) for transportation, treatment, storage, and disposal of hazardous and regulated waste by permitted facilities. Hazardous or toxic waste manifests must be reviewed, signed, and approved by the Contracting Officer before the Contractor may ship waste. To obtain specific disposal instructions, coordinate with the Installation Environmental Office. Refer to Section 01 57 19.01 20 SUPPLEMENTAL TEMPORARY ENVIRONMENTAL CONTROLS for the Installation Point of Contact information.

3.7.4 Releases/Spills of Oil and Hazardous Substances

3.7.4.1 Response and Notifications

Exercise due diligence to prevent, contain, and respond to spills of hazardous material, hazardous substances, hazardous waste, sewage, regulated gas, petroleum, lubrication oil, and other substances regulated in accordance with 40 CFR 300. Maintain spill cleanup equipment and materials at the work site. In the event of a spill, take prompt, effective action to stop, contain, curtail, or otherwise limit the amount, duration, and severity of the spill/release. In the event of any releases of oil and hazardous substances, chemicals, or gases; immediately (within 15 minutes) notify the Installation Fire Department, the Installation Command Duty Officer, the Installation Environmental Office, the Contracting Officer and the state or local authority.

Submit verbal and written notifications as required by the federal (40 CFR 300.125 and 40 CFR 355), state, local regulations and instructions. Provide copies of the written notification and documentation that a verbal notification was made within 20 days. Spill response must be in accordance with 40 CFR 300 and applicable state and local regulations. Contain and clean up these spills without cost to the Government.

3.7.4.2 Clean Up

Clean up hazardous and non-hazardous waste spills. Reimburse the Government for costs incurred including sample analysis materials, clothing, equipment, and labor if the Government will initiate its own spill cleanup procedures, for Contractor- responsible spills, when: Spill cleanup procedures have not begun within one hour of spill discovery/occurrence; or, in the Government's judgment, spill cleanup is inadequate and the spill remains a threat to human health or the environment.

3.7.5 Mercury Materials

Immediately report to the Environmental Office and the Contracting Officer instances of breakage or mercury spillage. Clean mercury spill area to the satisfaction of the Contracting Officer.

Do not recycle a mercury spill cleanup; manage it as a hazardous waste for disposal.

3.7.6 Wastewater

3.7.6.1 Disposal of wastewater must be as specified below.

3.7.6.1.1 Treatment

Do not allow wastewater from construction activities, such as onsite material processing, concrete curing, foundation and concrete clean-up, water used in concrete trucks, and forms to enter water ways or to be discharged prior to being treated to remove pollutants. Dispose of the construction- related waste water off-Government property in accordance with 40 CFR 403, state, regional, and local laws and regulations. by collecting and placing it in a retention pond where suspended material can be settled out or the water can evaporate to separate pollutants from the water. The site for the retention pond must be coordinated and approved with the Contracting Officer. The residue left in the pond prior to completion of the project must be removed, tested, and disposed of off-Government property in accordance with federal, state, and local laws and regulations. Backfill the area to the original grade, top-soiled, and seeded or sodded..

3.7.6.1.2 Surface Discharge

For discharge of ground water, obtain a state or federal permit specific for pumping and discharging ground water prior to surface discharging. Surface discharge in accordance with federal, state, and local laws and regulations. Surface discharge in accordance with the requirements of the NPDES or state STORMWATER DISCHARGES FROM CONSTRUCTION SITES permit.

3.7.6.1.3 Land Application

Water generated from the flushing of lines after disinfection or disinfection in conjunction with hydrostatic testing hydrostatic testing must be land- applied in accordance with federal, state, and local laws and regulations for land application discharged into the sanitary sewer with prior approval and notification to the Wastewater Treatment Plant's Operator.

3.8 HAZARDOUS MATERIAL MANAGEMENT

Include hazardous material control procedures in the Safety Plan, in accordance with Section 01 35 26 GOVERNMENTAL SAFETY REQUIREMENTS. Address procedures and proper handling of hazardous materials, including the appropriate transportation requirements. Do not bring hazardous material onto Government property that does not directly relate to requirements for the performance of this contract. Submit an SDS and estimated quantities to be used for each hazardous material to the Contracting Officer prior to bringing the material on the installation. Typical materials requiring SDS and quantity reporting include, but are

not limited to, oil and latex based painting and caulking products, solvents, adhesives, aerosol, and petroleum products. Use hazardous materials in a manner that minimizes the amount of hazardous waste generated. Containers of hazardous materials must have National Fire Protection Association labels or their equivalent. Certify that hazardous materials removed from the site are hazardous materials and do not meet the definition of hazardous waste, in accordance with 40 CFR 261.

3.8.1 Contractor Hazardous Material Inventory Log

Submit the "Contractor Hazardous Material Inventory Log"(found at: http://www.wbdg.org/ffc/dod/unified-facilities-guide-specifications-ufgs/forms-graphic), which provides information required by (EPCRA Sections 312 and 313) along with corresponding SDS, to the Contracting Officer at the start and at the end of construction (30 days from final acceptance), and update no later than January 31 of each calendar year during the life of the contract. Keep copies of the SDSs for hazardous materials onsite. At the end of the project, provide the Contracting Officer with copies of the SDSs, and the maximum quantity of each material that was present at the site at any one time, the dates the material was present, the amount of each material that was used during the project, and how the material was used.

The Contracting Officer may request documentation for any spills or releases, environmental reports, or off-site transfers.

3.9 PREVIOUSLY USED EQUIPMENT

Clean previously used construction equipment prior to bringing it onto the project site. Equipment must be free from soil residuals, egg deposits from plant pests, noxious weeds, and plant seeds. Consult with the U.S. Department of Agriculture jurisdictional office for additional cleaning requirements.

3.10 CONTROL AND MANAGEMENT OF ASBESTOS-CONTAINING MATERIAL (ACM)

Manage and dispose of asbestos- containing waste in accordance with 40 CFR 61. Refer to Section 02 82 00 ASBESTOS REMEDIATION. Manifest asbestos-containing waste and provide the manifest to the Contracting Officer. Notifications to the state and Installation Air Program Manager are required before starting any asbestos work.

3.11 CONTROL AND MANAGEMENT OF LEAD-BASED PAINT (LBP)

Manage and dispose of lead-contaminated waste in accordance with 40 CFR 745 and Section 02 83 00 LEAD REMEDIATION. Manifest any lead-contaminated waste and provide the manifest to the Contracting Officer.

3.12 CONTROL AND MANAGEMENT OF POLYCHLORINATED BIPHENYLS (PCBS)

Manage and dispose of PCB-contaminated waste in accordance with 40 CFR 761 and Section 02 84 33 REMOVAL AND DISPOSAL OF POLYCHLORINATED BIPHENYLS (PCBS).

3.13 CONTROL AND MANAGEMENT OF LIGHTING BALLAST AND LAMPS CONTAINING PCBS

Manage and dispose of contaminated waste in accordance with 40 CFR 761.

3.14 MILITARY MUNITIONS

In the event military munitions, as defined in 40 CFR 260, are discovered or uncovered, immediately stop work in that area and immediately inform the Contracting Officer.

3.14.1 Emergency Unexploded Ordinance (UXO) Response

In the event UXOs, as defined in 40 CFR 260, are encountered during construction activities, stop work immediately and have all personnel clear the immediate area. Immediately report the situation to the ROICC or Contracting Representative, who will then report the item to Range Control and Explosive Ordnance Disposal (EOD).

3.14.2 UXO Safety Awareness Training

Complete 3R (Recognize, Retreat, Report) UXO Safety Awareness Training prior to working in known contaminated areas at MCB Camp Lejeune. Refer to the website http://www.lejeune.marines.mil/OfficesStaff/EnvironmentalMgmt/TrainingVideo.aspx for the training and the latest edition of the Camp Lejeune Contractor Environmental Guide for guidance and information.

3.15 PETROLEUM, OIL, LUBRICANT (POL) STORAGE AND FUELING

POL products include flammable or combustible liquids, such as gasoline, diesel, lubricating oil, used engine oil, hydraulic oil, mineral oil, and cooking oil. Store POL products and fuel equipment and motor vehicles in a manner that affords the maximum protection against spills into the environment. Manage and store POL products in accordance with EPA 40 CFR 112, and other federal, state, regional, and local laws and regulations. Use secondary containments, dikes, curbs, and other barriers, to prevent POL products from spilling and entering the ground, storm or sewer drains, stormwater ditches or canals, or navigable waters of the United States. Describe in the EPP (see paragraph ENVIRONMENTAL PROTECTION PLAN) how POL tanks and containers must be stored, managed, and inspected and what protections must be provided. Storage of oil, including fuel, on the project site is not allowed. Fuel must be brought to the project site each day that work is performed. Storage of fuel on the project site must be in accordance with EPA, state, and local laws and regulations and paragraph OIL STORAGE INCLUDING FUEL TANKS.

3.15.1 Used Oil Management

Manage used oil generated on site in accordance with 40 CFR 279. Determine if any used oil generated while onsite exhibits a characteristic of hazardous waste. Used oil containing 1,000 parts per million of solvents is considered a hazardous waste and disposed of at the Contractor's expense. Used oil mixed with a hazardous waste is also considered a hazardous waste. Dispose in accordance with paragraph HAZARDOUS WASTE DISPOSAL.

3.15.2 Oil Storage Including Fuel Tanks

Provide secondary containment and overfill protection for oil storage tanks. A berm used to provide secondary containment must be of sufficient size and strength to contain the contents of the tanks plus 5 inches freeboard for precipitation. Construct the berm to be impervious to oil for 72 hours that no discharge will permeate, drain, infiltrate, or

otherwise escape before cleanup occurs. Use drip pans during oil transfer operations; adequate absorbent material must be onsite to clean up any spills and prevent releases to the environment. Cover tanks and drip pans during inclement weather. Provide procedures and equipment to prevent overfilling of tanks. If tanks and containers with an aggregate aboveground capacity greater than 1320 gallons will be used onsite (only containers with a capacity of 55 gallons or greater are counted), provide and implement a SPCC plan meeting the requirements of 40 CFR 112. Do not bring underground storage tanks to the installation for Contractor use during a project. Submit the SPCC plan to the Contracting Officer for approval.

Monitor and remove any rainwater that accumulates in open containment dikes or berms. Inspect the accumulated rainwater prior to draining from a containment dike to the environment, to determine there is no oil sheen present.

3.16 INADVERTENT DISCOVERY OF PETROLEUM-CONTAMINATED SOIL OR HAZARDOUS WASTES

If petroleum-contaminated soil, or suspected hazardous waste is found during construction that was not identified in the Contract documents, immediately notify the Contracting Officer. Do not disturb this material until authorized by the Contracting Officer.

3.17 CHLORDANE

Evaluate excess soils and concrete foundation debris generated during the demolition of housing units or other wooden structures for the presence of chlordane or other pesticides prior to reuse or final disposal.

3.18 SOUND INTRUSION

Make the maximum use of low-noise emission products, as certified by the EPA. Blasting or use of explosives are not permitted without written permission from the Contracting Officer, and then only during the designated times. Confine pile-driving operations to the period between 8 a.m. and 4 p.m., Monday through Friday, exclusive of holidays, unless otherwise specified.

Keep construction activities under surveillance and control to minimize environment damage by noise. Comply with the provisions of the State of North Carolina rules.

3.19 POST CONSTRUCTION CLEANUP

Clean up areas used for construction in accordance with Contract Clause: "Cleaning Up". Unless otherwise instructed in writing by the Contracting Officer, remove traces of temporary construction facilities such as haul roads, work area, structures, foundations of temporary structures, stockpiles of excess or waste materials, and other vestiges of construction prior to final acceptance of the work. Grade parking area and similar temporarily used areas to conform with surrounding contours.

-- End of Section --

SECTION 01 57 19.01 20

SUPPLEMENTAL TEMPORARY ENVIRONMENTAL CONTROLS
05/16

PART 1 GENERAL

1.1 MID-ATLANTIC

Comply with the following state, regional, and local requirements which supplement Section 01 57 19 TEMPORARY ENVIRONMENTAL CONTROLS.

1.1.1 North Carolina

1.1.1.1 MCB Camp Lejeune

1.1.1.1.1 Removal of Waste

Remove and dispose of rubbish and debris from Government property. Provide 24-hour advance written notice to the Contracting Office of Contractor's intention to dispose rubbish and debris off base. Disposal at sites or landfills not holding a valid state of North Carolina permit is specifically prohibited. The prohibition also applies to sites where a permit my have been applied for but not yet obtained. If construction debris has been disposed off-base outside the parameter of this paragraph at a site without state permits or not in accordance with regulatory requirements, remove, transport, and relocate the debris to a state-approved site at Contractor expense. Pay any required fines, penalties, or fees related to the illegal disposal of construction debris. Metal will not be accepted at the Base Sanitary Landfill. Materials that may be deposited in the landfill include the following:

CATEGORY	**CONSTRUCTION DEBRIS DISPOSAL - BASE SANITARY LANDFILL EXAMPLE/GENERAL INFORMATION FOR DEPOSIT IN THE LANDFILL**
Mixed Debris	The following materials may be placed in the landfill in a location designated by the landfill operator. These items may be mixed together.
	Sheetrock, plaster, glass (broken), Non-asbestos insulation, (fiberglass and mineral wool must be bagged).
	Packing paper, Styrofoam, and pasteboard boxes Non-asbestos roofing materials such as shingles built-up and shingle roofing. Painted wood such as doors, windows, siding, and trim.

CATEGORY	CONSTRUCTION DEBRIS DISPOSAL - BASE SANITARY LANDFILL EXAMPLE/GENERAL INFORMATION FOR DEPOSIT IN THE LANDFILL
	Plastic and fiberglass such as pipe, electrical boxes, cover plates, and similar. Ceramic and vinyl flooring or tile and ceiling tile.
Masonry and Concrete	Deliver concrete, block, brick, mortar to the landfill separate from any other items, and place in a location designated by the landfill operator. Reinforcement wire and rebar must be removed flush with exposed surfaces.
Non-recyclable Cardboard	Breakdown corrugated cardboard boxes and deliver to the Base Recycling Center located at Building 913. If Base personnel rejects the cardboard, take cardboard to the landfill.
Non-recyclable Wall Pallets	Deliver usable pallets to the Base Recycling Center located at Building 913. If Base personnel rejects the pallets, take pallets to the landfill.
Treated Wood	Deliver treated wood, and such as piling and power poles, to the landfill separated from any other items, and place in locations as designated by the landfill operator.
Untreated/Unpainted Wood	Deliver lumber, trees, stumps, limbs, tops, and shrubs to the landfill separated from any other items, and place in locations as designated by landfill operator.
Organic Matter	Deliver leaves, pine straw, and grass clippings to the landfill separated from any other items, and place in locations as designated by landfill operator. No bags or containers are allowed.
Fiberglass Tanks - 2000 liter 550 Gallons or less	Clean tanks before delivering to the landfill.
Asphalt Pavement	Remove pavement from Government property and deliver to an asphalt-recycling establishment. Provide a record of the total tons of asphalt recycled and the corporate name and location of the recycling establishment receiving the removed asphalt.

CATEGORY	CONSTRUCTION DEBRIS DISPOSAL - BASE SANITARY LANDFILL EXAMPLE/GENERAL INFORMATION FOR DEPOSIT IN THE LANDFILL
Weigh each and every vehicle delivering debris	Separate each category of construction debris at construction site and deliver separately to the landfill.
Weigh each and every vehicle delivering debris	Place each category of construction debris in the landfill at the location designated by the landfill operator.
Metals	Metals will not be accepted at the landfill. Remove metals from each category before delivery to the landfill. (Example: Remove hardware from doors and windows)
	Dispose of metal construction debris at Defense Reutilization Maintenance Office (DRMO) Building TC-861, Camp Geiger.
	Aluminum, brass, copper, lead, other metal, electrical wiring, cable (cut in 3-foot or less sections)

1.1.1.1.2 Surplus Soils Disposal for Camp Lejeune

No soil from construction sites shall leave Marine Corps Base Camp Lejeune or Marine Corps Air Station property, with the exception of environmental remedial activities. Any surplus soil that cannot be reused on its originating site shall be transported to one of the following locations:

a. Areas managed by G-3/5 for reuse on training areas for various maintenance activities:

3.5 acre storage within TLZ Condor off Verona Loop Road, approximate coordinates 34°38'07.3"N 77°26'41.7"W.

Coordinate with G-3/5 Project Development Specialist, MCIEAST-MCB CAMLEJ at (910) 451-5772 to determine capacity available at the storage location, prior to delivery.

This site operates Monday through Thursday between 0730 and 1500.

b. Area managed by PWD for use as daily cover:

Base landfill, located on Piney Green Road, approximate coordinates 34°41'26.9"N 77°19'27.4"W.

Contractor shall provide temporary silt fencing around designated stockpile areas as needed.

Coordinate with Landfill Manager at (910) 451-8666. Landfill use letters will be provided so that deliveries can be tracked.

This site operates Monday through Thursday between 0730 and 1500 and on Friday between 0700 and 1400.

Contact POCs listed above 7 to 10 days in advance to coordinate delivery of material at the storage locations.

Prior to transport, contractors shall screen soil on-site. Particle size shall be limited to 3 inches or less.

All soils will be clear of deleterious organic debris such as roots and timber, and construction debris. Construction debris shall include, but is not limited to: wood, plastic, glass, concrete, brick, and metal.

Upon each delivery to the storage areas, Contractor shall mobilize a bulldozer to the disposal location and assist the Government by the stacking of material. Subsequently, Contractor shall then provide the following items to the Contracting Officer for review and approval:

1) Photographic documentation, with timestamp, of stockpiled soil.
2) Certification statement indicating volume, in cubic yards (CY), of material delivered and confirming material is free of contaminants.

NOTE: Soil contaminated with debris or chemicals cannot be disposed at the stockpile locations. If contaminated soils are suspected or confirmed through presence of UXO, odors, or visual staining, affected soils must be properly tested, manifested, and disposed of in accordance with RCRA regulations. Contact Base EMD, ER Program Manager, for more information.

PART 2 PRODUCTS

Not Used

PART 3 EXECUTION

Not Used

-- End of Section --

SECTION 01 58 00

PROJECT IDENTIFICATION
09/15

PART 1 GENERAL

1.1 REFERENCES

The publications listed below form a part of this specification to the extent referenced. The publications are referred to within the text by the basic designation only.

AMERICAN WOOD PROTECTION ASSOCIATION (AWPA)

AWPA C1	(2003) All Timber Products - Preservative Treatment by Pressure Processes
AWPA C2	(2003) Lumber, Timber, Bridge Ties and Mine Ties - Preservative Treatment by Pressure Processes

1.2 SUBMITTALS

Government approval is required for submittals with a "G" designation; submittals not having a "G" designation are for Contractor Quality Control approval. The following shall be submitted in accordance with Section 01 33 00 SUBMITTAL PROCEDURES:

SD-02 Shop Drawings

preliminary drawing indicating layout and text content; G

SD-04 Samples

Final framed rendering and copies; G

1.3 QUALITY ASSURANCE

1.3.1 Rendering

Hard copies of (2) color renderings will be provided to the GC for faming.

1.3.1.1 Final Framed Rendering and Copies

GC will provide frame (6) color renderings; (3) of 1481 and (3) of 1482.

1.4 PROJECT SIGN

Prior to initiating any work on site, provide two project identification signs, (1) for P1481 and (1) for P1482, at the locations designated by the RIOCC. Construct the sign in accordance with project sign detail attached at the end of this section. Maintain sign throughout the life of the project. Upon completion of the project, remove the sign from the site.

1.4.1 Project Identification Signboard (Navy)

A project identification signboard shall be provided in accordance with the attached Plates. Provide preliminary drawing indicating layout and text content.The signboard shall be provided at a conspicuous location on the job site where directed by the Contracting Officer.

a. The field of the sign shall consist of a 4 by 8 foot sheet of grade B-B medium density overlaid exterior plywood.

b. Lumber shall be B or better Southern pine, pressure-preservative treated in accordance with AWPA C1 and AWPA C2. Nails shall be aluminum or galvanized steel.

c. The entire signboard and supports shall be given one coat of exterior alkyd primer and two coats of exterior alkyd enamel paint. The lettering and sign work shall be performed by a skilled sign painter using paint known in the trade as bulletin colors. The colors, lettering sizes, and lettering styles shall be as indicated. Where preservative-treated lumber is required, utilize only cured pressure-treated wood which has had the chemicals leached from the surface of the wood prior to painting.

d. Use spray applied automotive quality high gloss acrylic white enamel paint as background for the NAVFAC logo. NAVFAC logo shall be an applied 2 millimeter film sticker/decal with either transparent or white background or paint the logo by stencil onto the sign. The weather resistant sticker/decal film shall be rated for a minimum of 2-year exterior vertical exposure. The self-adhering sticker shall be mounted to the sign with pressure sensitive, permanent acrylic adhesive. Shop cut sticker/decal to rectangular shape and provide pull-off backing sheet on adhesive side of design sticker for shipping.

e. Sign paint colors (manufacturer's numbers/types listed below for color identification only)

   (1) Blue = To match dark blue color in the NAVFAC logo.

   (2) White = To match Brilliant White color in the NAVFAC logo.

f. NAVFAC logo must retain proportions and design integrity. NAVFAC logos in electronic format may be obtained from the NAVFAC web portal via the following link: http://www.flickr.com/photos/navfac/sets/72157627315803197/with/6045913859/. Use the following to choose color values for the paint to be used:

   (1) Dark Blue = equivalent to CMYK values 100, 72, 0, 8.

   (2) Light Blue = equivalent to CMYK values 69, 34, 0, 0.

   (3) Cyan = equivalent to CMYK values 100, 9, 0, 6.

   (4) Yellow = equivalent to CMYK values 0.9,94, 0.

PART 2 PRODUCTS

Not Used.

PART 3 EXECUTION

Not Used.

-- End of Section --

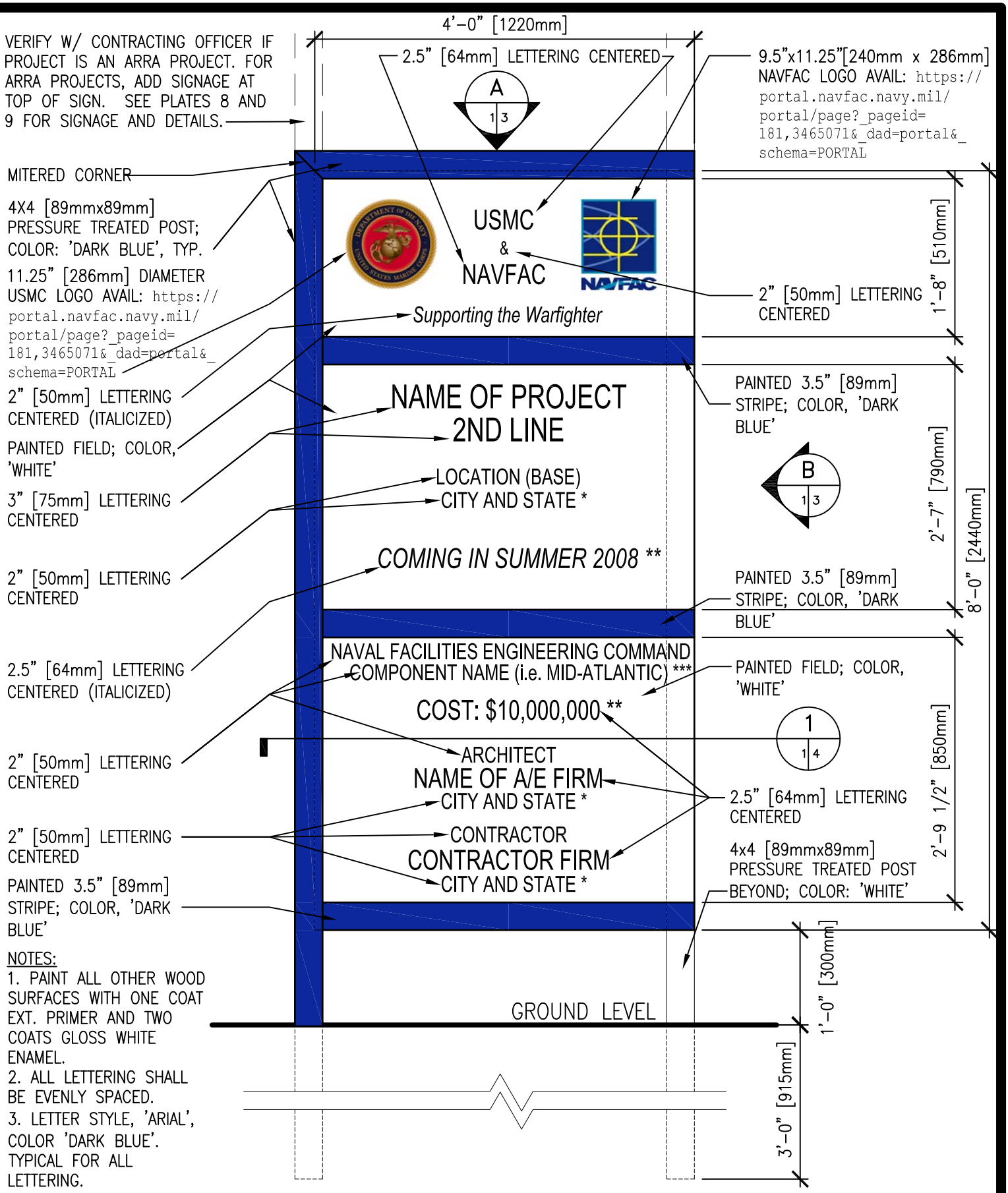

NOTES:
1. PAINT ALL OTHER WOOD SURFACES WITH ONE COAT EXT. PRIMER AND TWO COATS GLOSS WHITE ENAMEL.
2. ALL LETTERING SHALL BE EVENLY SPACED.
3. LETTER STYLE, 'ARIAL', COLOR 'DARK BLUE'. TYPICAL FOR ALL LETTERING.
*–ABBREVIATE STATE
**–CONFIRM USE WITH CONTRACTING OFFICER
***–VERIFY NAME WITH CONTRACTING OFFICER.

PROJECT IDENTIFICATION SIGNBOARD FOR MARINE CORPS PROJECTS

SCALE: 3/4" = 1'-0"

PLATE 1MC

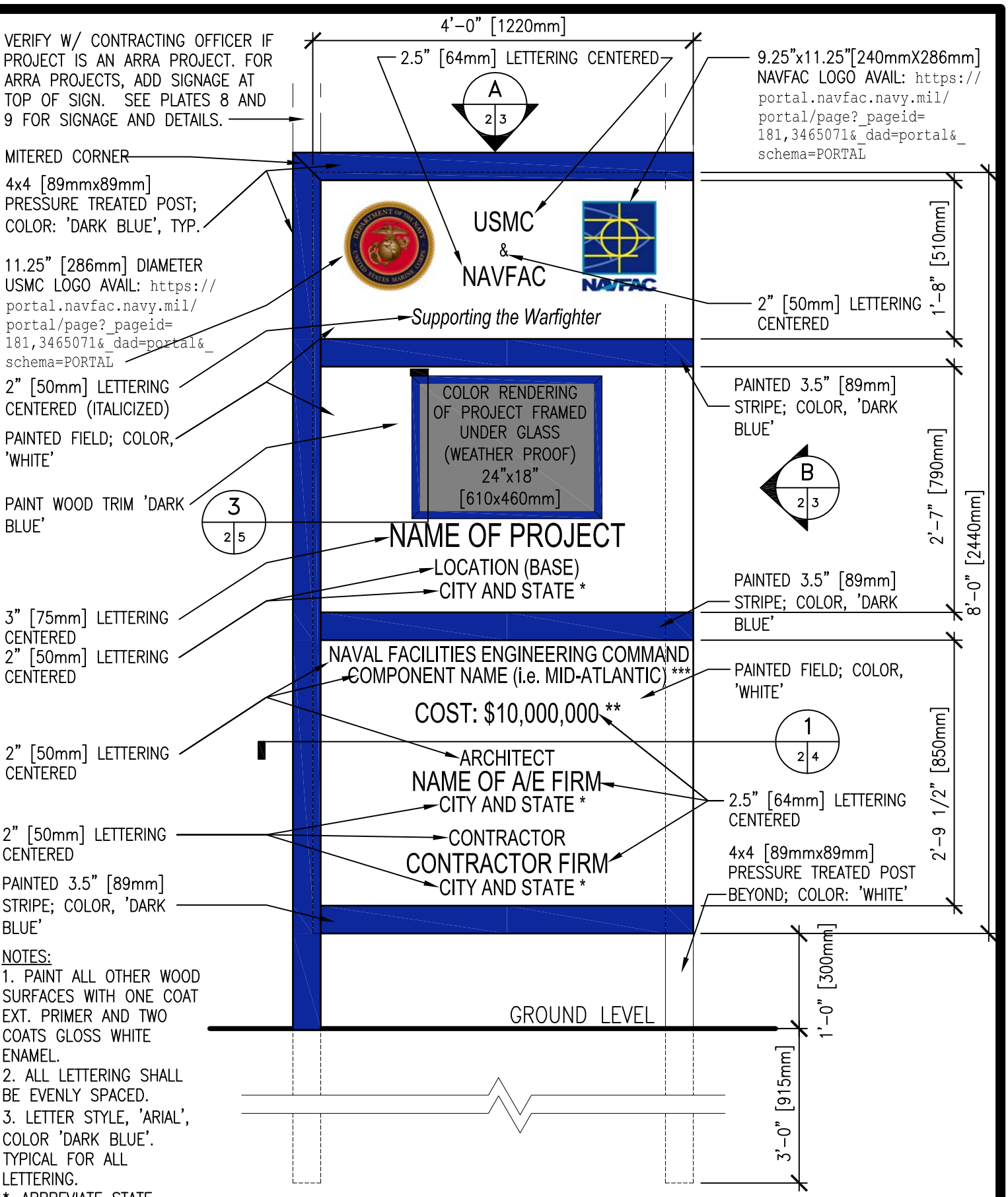

NOTES:
1. PAINT ALL OTHER WOOD SURFACES WITH ONE COAT EXT. PRIMER AND TWO COATS GLOSS WHITE ENAMEL.
2. ALL LETTERING SHALL BE EVENLY SPACED.
3. LETTER STYLE, 'ARIAL', COLOR 'DARK BLUE'. TYPICAL FOR ALL LETTERING.

*–ABBREVIATE STATE
**–CONFIRM USE WITH CONTRACTING OFFICER
***–VERIFY NAME WITH CONTRACTING OFFICER.

PROJECT IDENTIFICATION SIGNBOARD FOR MARINE CORPS PROJECTS

SCALE: 3/4" = 1'-0"

PLATE 2MC

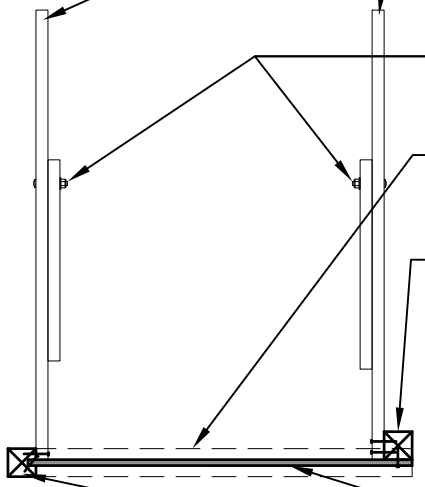

A 1,2 3

TOP VIEW

SCALE: 1/2" = 1'-0"

NOTES:
1. POSTS AND BRACES SHALL BE PRESSURE TREATED.
2. ALL FASTENERS SHALL BE ZINC COATED.
3. BRACING IS REQUIRED IN ALL SOIL CONDITIONS AND HIGH WIND ENVIRONMENTS.

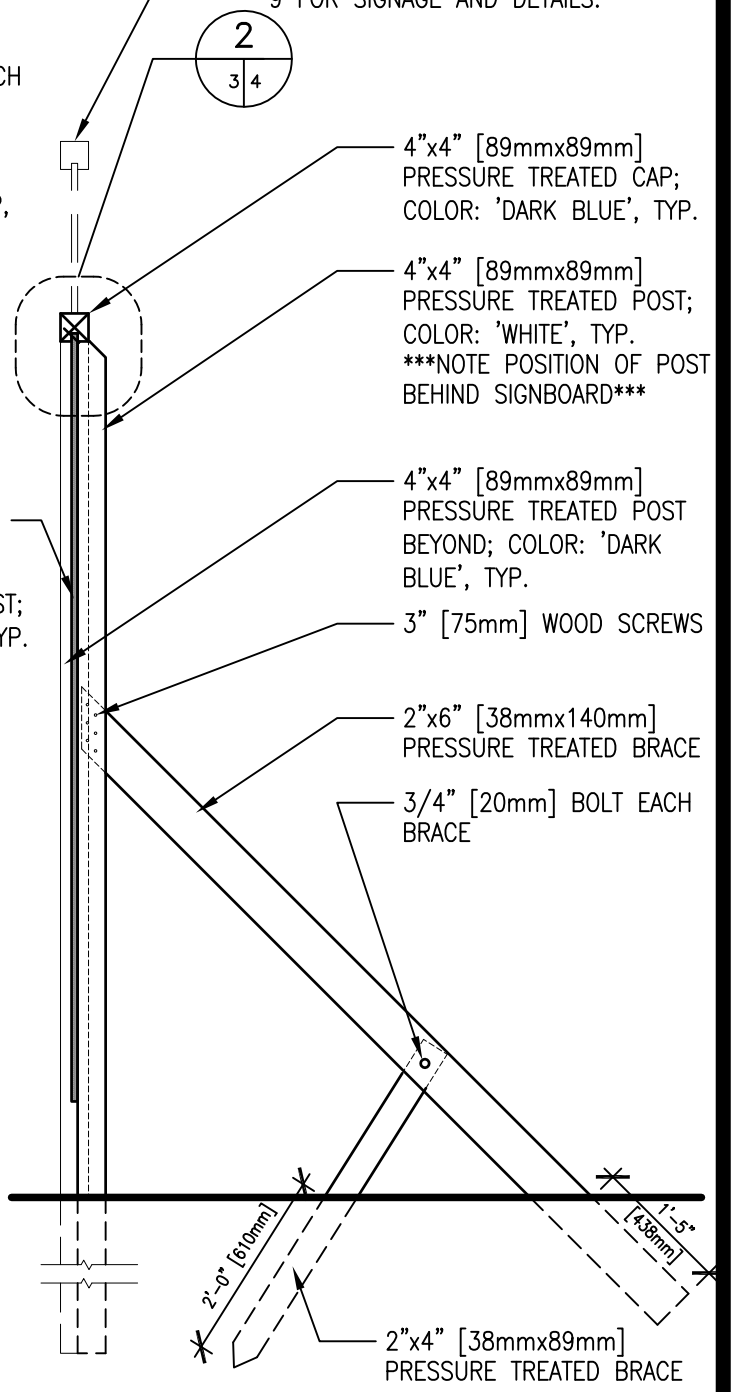

B 1,2 3

SIDE VIEW

SCALE: 1/2" = 1'-0"

PROJECT IDENTIFICATION SIGNBOARD SUPPORT DETAILS

PLATE 3

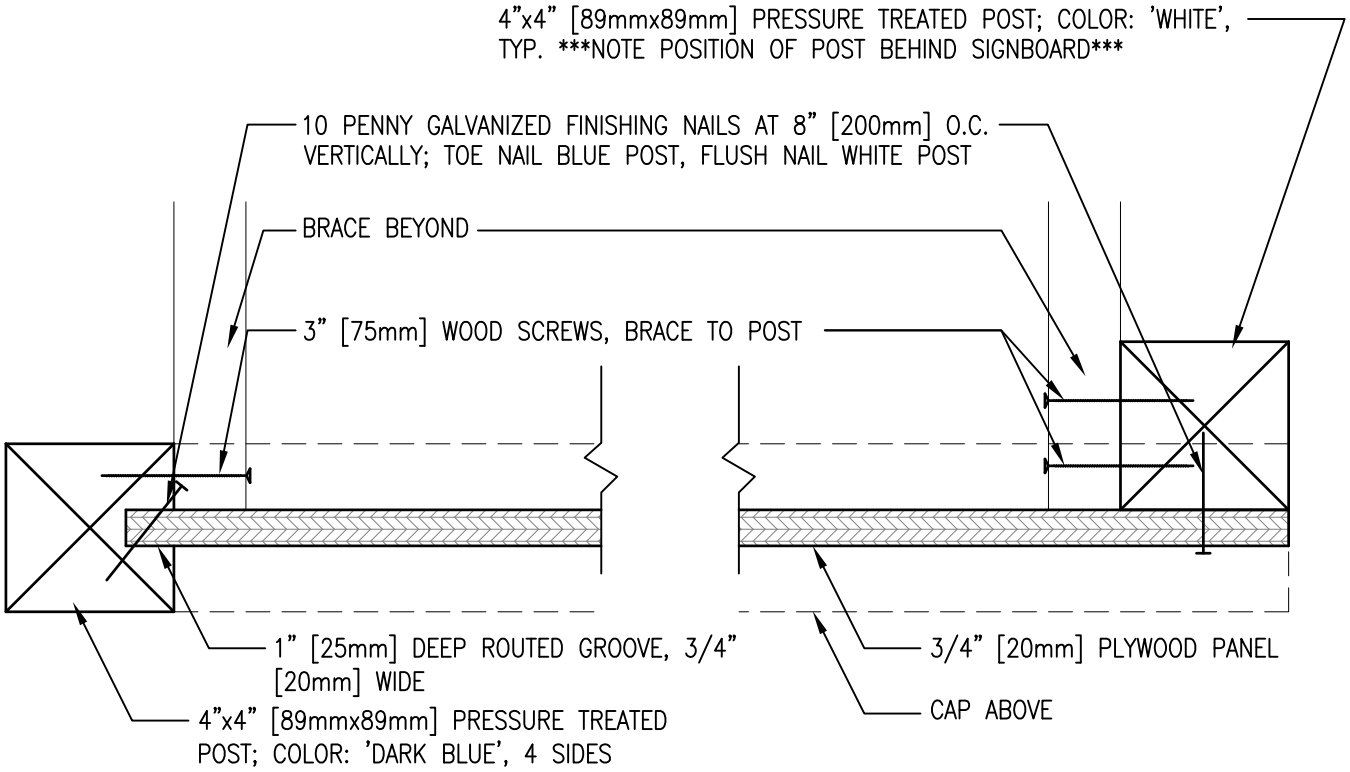

1 PLAN SECTION

1,2 | 4

SCALE: 3" = 1'-0"

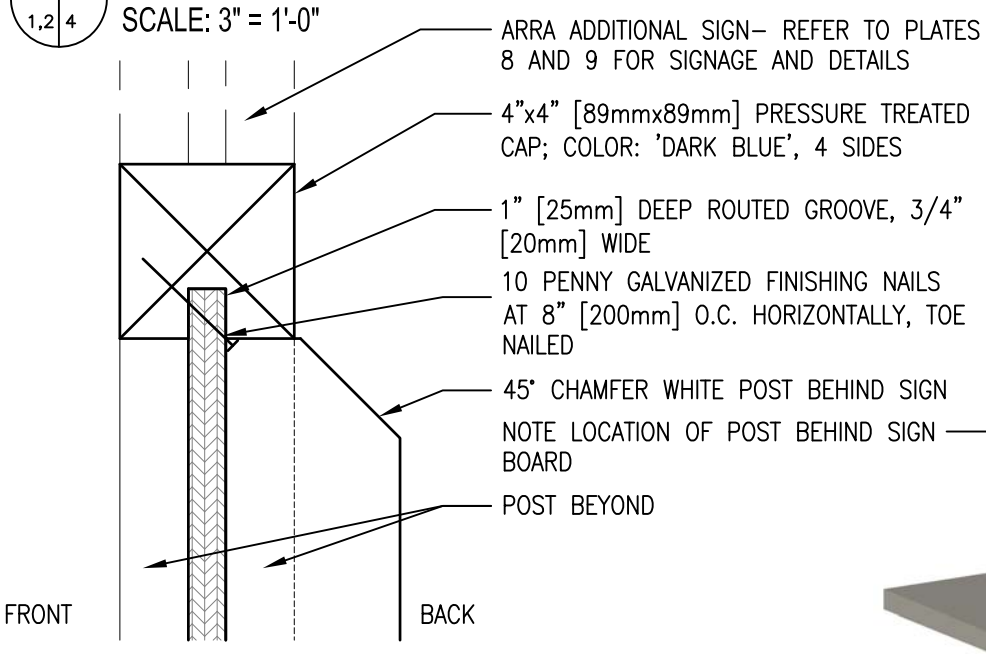

2 SECTION AT TOP

1,2 | 4

SCALE: 3" = 1'-0"

3 ISO VIEW

2 | 4

SCALE: NONE

PROJECT IDENTIFICATION SIGNBOARD SECTIONS

PLATE 4

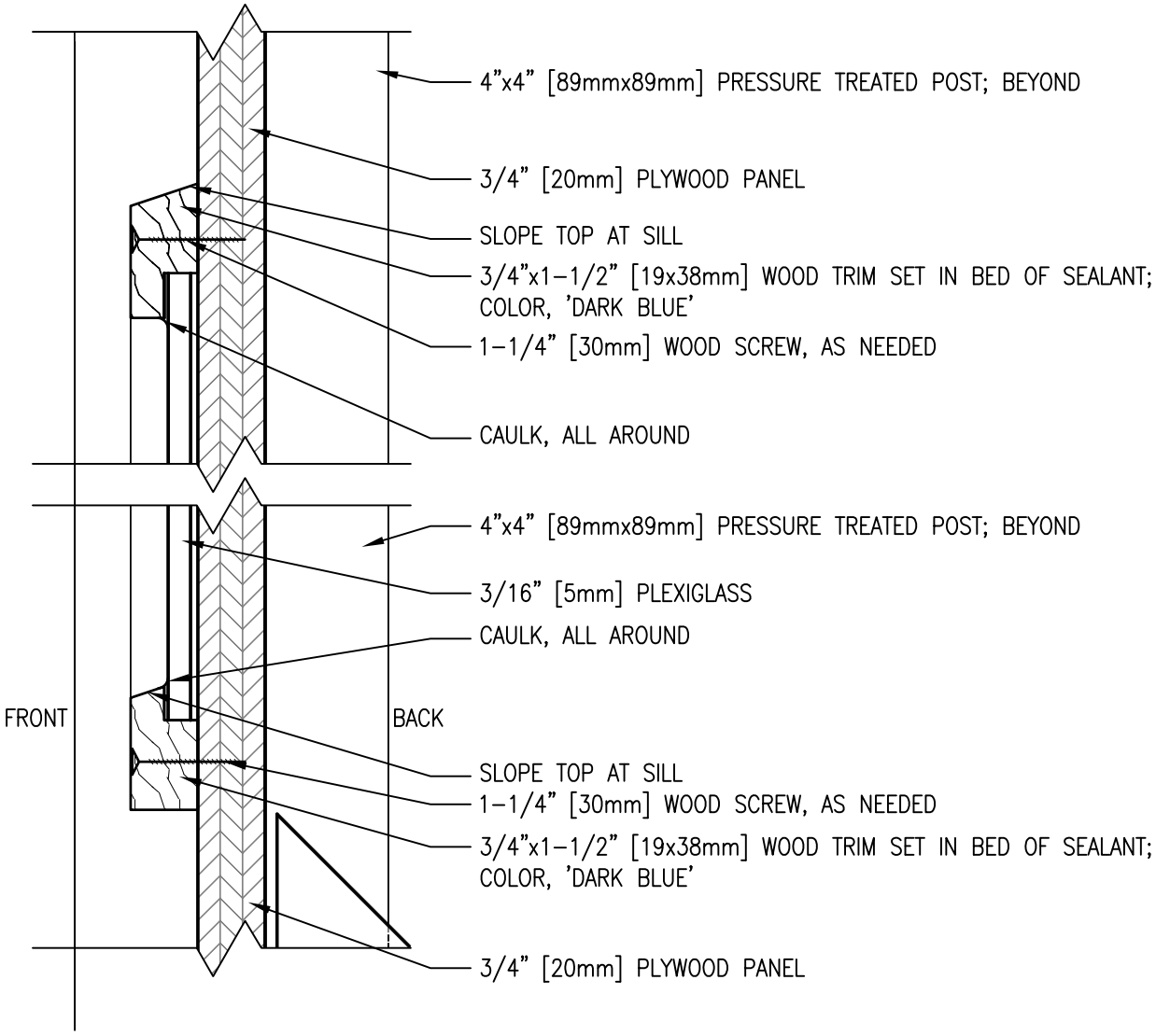

3
2 5

SECTION AT RENDERING FRAME

SCALE: 6" = 1'-0"

PROJECT IDENTIFICATION SIGNBOARD SECTION

PLATE 5

SECTION 01 60 00.00 22

REQUIREMENTS FOR PESTICIDE AND HERBICIDE COORDINATION
08/16

PART 1 GENERAL

1.1 SUBMITTALS

Government approval is required for submittals with a "G" designation; submittals not having a "G" designation are for Contractor Quality Control approval. Submit the following in accordance with Section 01 33 00 SUBMITTAL PROCEDURES:

SD-07 Certificates

Certificate of State Licensed Applicator; G

SD-11 Closeout Submittals

Completed Field Pesticide/Herbicide Management Record Form; G

1.2 QUALITY ASSURANCE

1.2.1 Certificate of State Licensed Applicator

A State licensed applicator is required and must be licensed in the state in which the project is located. Submit a copy of the certificate(s) to the Base Pest Management Coordinator (PMC) through the Contracting Officer.

PART 2 PRODUCTS

2.1 PESTICIDE/HERBICIDE LIST

Comply with Base Regulations and use only approved pesticides/herbicides listed on the current "Base Approved Pesticide/herbicide List". Use the approved list that is current at the time of application. Contact the Contracting Officer to obtain the current approved list.

PART 3 EXECUTION

3.1 COORDINATION WITH BASE PEST MANAGEMENT COORDINATOR (PMC)

Coordinate with the PMC before proceeding with any pesticide/herbicide application. The Point of Contact information for the Base Pest Management Coordinator can be obtained from the Contracting Officer.

3.2 Field Pesticide/Herbicide Management Record Form

Following the pesticide/herbicide application, complete the attached Field Pesticide/Herbicide Management Record Form and submit to the Base Pest Management Coordinator (PMC) through the Contracting Officer. Submit the completed form(s) within 15 days after application.

-- End of Section --

J-1503020-05

FIELD **PESTICIDE / HERBICIDE** MANAGEMENT RECORD FORM

Revised 24 October 2012

Electronic Form

PROJECT / CONTRACT# _____

Instructions: **A separate form will be filled out for EACH formulation at EACH location or building (if treating inside AND outside of a building, use two separate forms).**

1. Date of Application: _____

2. Location: (Check One) ☐ Inside or ☐ Outside

3. Building # and/or Name: _____

4. Type of Pest Control Operation: _____
   (i.e. Baiting, Power Spray, Manual application of pesticides, ULV, etc.)

5. Site Description: _____
   (i.e. Office, Barracks, Housing, Warehouse, Snack Bar, Lawn, Unimproved Grounds, etc.)

6. Pest type: _____
   (i.e. Ants, Fire Ants, Cockroaches, Spiders, Termites, etc.)

7. **Contractor/Subcontractor's Company Name**: _____

8. Pesticide Used:
   a. Pesticide Trade Name: _____

   b. Pesticide Active Ingredient: _____

   c. EPA Registration #: _____

   d. Formulation (i.e. Liquid, Granular, Gel, EC, Aerosol, etc.): _____

9. Total Area treated (approximate):_____
   Units: (Check one) ☐ SF ☐ LF ☐ AC ☐ CF
   ☐ EA (for baiting, aerosol cans, etc.) ☐ Other

10. Quantity of **Pesticide Concentrate** applied (approximate) _____
    Units: (Check one) ☐ FLoz ☐ DRoz ☐ Gal ☐ QT ☐ PT ☐ LB
    ☐ PKT ☐ GR ☐ Bait Block ☐ Bait Station ☐ Briquette ☐ Other

11. **Quantity of Dilutant applied (if applicable)**:
    a. Type of Dilutant (i.e. Water, Oil, etc.): _____
    b. Units: (Check one) ☐ FLoz ☐ Gal ☐ LT ☐ ML ☐ Other

12. Comments: (i.e. Survey results, Wind conditions, Sanitation deficiencies, etc.)

    _____

13. Printed Name **AND** Signature of Applicator:

    _____

14. Certification # of Applicator: _____

SECTION 01 74 19

CONSTRUCTION AND DEMOLITION WASTE MANAGEMENT
01/07

PART 1 GENERAL

1.1 REFERENCES

The publications listed below form a part of this specification to the extent referenced. The publications are referred to within the text by the basic designation only.

U.S. GREEN BUILDING COUNCIL (USGBC)

LEED BD+C	(2009; R 2010) Leadership in Energy and Environmental Design(tm) Building Design and Construction (LEED-NC)
LEED GBDC Ref Guide	(2009; R 2010) LEED Reference Guide for Green Building Design, Construction and Major Renovations of Commercial and Institutional Buildings including Core & Shell and K-12 Projects

1.2 GOVERNMENT POLICY

Government policy is to apply sound environmental principles in the design, construction and use of facilities. As part of the implementation of that policy: (1) practice efficient waste management when sizing, cutting, and installing products and materials and (2) use all reasonable means to divert construction and demolition waste from landfills and incinerators and to facilitate their recycling or reuse. Divert a minimum of 50 percent by weight of total project solid waste from the landfill.

1.3 MANAGEMENT

Develop and implement a waste management program. Take a pro-active, responsible role in the management of construction and demolition waste and require all subcontractors, vendors, and suppliers to participate in the effort. The Environmental Manager, as specified in Section 01 57 19 TEMPORARY ENVIRONMENTAL CONTROLS, is responsible for instructing workers and overseeing and documenting results of the Waste Management Plan for the project. Construction and demolition waste includes products of demolition or removal, excess or unusable construction materials, packaging materials for construction products, and other materials generated during the construction process but not incorporated into the work. In the management of waste, consider the availability of viable markets, the condition of the material, the ability to provide the material in suitable condition and in a quantity acceptable to available markets, and time constraints imposed by internal project completion mandates. Implement any special programs involving rebates or similar incentives related to recycling of waste. Revenues or other savings obtained for salvage, or recycling accrue to the Contractor. Appropriately permit firms and facilities used for recycling, reuse, and disposal for the intended use to the extent required by federal, state, and local regulations. Also, provide on-site instruction of appropriate

separation, handling, recycling, salvage, reuse, and return methods to be used by all parties at the appropriate stages of the project.

1.4 SUBMITTALS

Government approval is required for submittals with a "G" designation; submittals not having a "G" designation are for Contractor Quality Control approval. Submittals with an "S" are for inclusion in the Sustainability Notebook, in conformance to Section 01 33 29 SUSTAINABILITY REPORTING. Submit the following in accordance with Section 01 33 00 SUBMITTAL PROCEDURES:

SD-01 Preconstruction Submittals

Waste Management Plan; G; (LEED BD+C)

SD-11 Closeout Submittals

Records; (LEED BD+C)

1.5 MEETINGS

Conduct Construction Waste Management meetings. After award of the Contract and prior to commencement of work, schedule and conduct a meeting with the Contracting Officer to discuss the proposed Waste Management Plan and to develop a mutual understanding relative to the details of waste management. The requirements for this meeting may be fulfilled during the coordination and mutual understanding meeting outlined in Section 01 45 00.00 20 QUALITY CONTROL. At a minimum, discuss environmental and waste management goals and issues at the following additional meetings:

a. Pre-bid meeting.

b. Preconstruction meeting.

c. Regular site meetings.

d. Work safety meetings.

1.6 WASTE MANAGEMENT PLAN

Submit a waste management plan within 15 days after contract award and not less than 10 days before the preconstruction meeting. The plan demonstrates how to meet the the project waste diversion goal. Also, include the following in the plan:

a. Name of individuals on the Contractor's staff responsible for waste prevention and management.

b. Actions that will be taken to reduce solid waste generation, including coordination with subcontractors to ensure awareness and participation.

c. Description of the regular meetings to be held to address waste management.

d. Description of the specific approaches to be used in recycling/reuse of the various materials generated, including the areas on site and equipment to be used for processing, sorting, and temporary storage of wastes.

e. Characterization, including estimated types and quantities, of the waste to be generated.

f. Name of landfill and/or incinerator to be used and the estimated costs for use, assuming that there would be no salvage or recycling on the project.

g. Identification of local and regional reuse programs, including non-profit organizations such as schools, local housing agencies, and organizations that accept used materials such as materials exchange networks and Habitat for Humanity. Include the name, location, and phone number for each reuse facility to be used, and provide a copy of the permit or license for each facility.

h. List of specific waste materials that will be salvaged for resale, salvaged and reused on the current project, salvaged and stored for reuse on a future project, or recycled. Identify the recycling facilities by name, location, and phone number, including a copy of the permit or license for each facility.

i. Identification of materials that cannot be recycled/reused with an explanation or justification, to be approved by the Contracting Officer.

j. Description of the means by which any waste materials identified in item (h) above will be protected from contamination.

k. Description of the means of transportation of the recyclable materials (whether materials will be site-separated and self-hauled to designated centers, or whether mixed materials will be collected by a waste hauler and removed from the site).

l. Anticipated net cost savings determined by subtracting Contractor program management costs and the cost of disposal from the revenue generated by sale of the materials and the incineration and/or landfill cost avoidance.

Revise and resubmit Plan as required by the Contracting Officer. Approval of Contractor's Plan will not relieve the Contractor of responsibility for compliance with applicable environmental regulations or meeting project cumulative waste diversion requirement. Distribute copies of the Waste Management Plan to each subcontractor, the Quality Control Manager, and the Contracting Officer.

1.7 RECORDS

Maintain records to document the quantity of waste generated; the quantity of waste diverted through sale, reuse, or recycling; and the quantity of waste disposed by landfill or incineration. Keep records in accordance with the LEED GBDC Ref Guide and using the LEED BD+C Letter Template. Quantities may be measured by weight or by volume, but must be consistent throughout. List each type of waste separately noting the disposal or diversion date. Identify the landfill, recycling center, waste processor, or other organization used to process or receive the solid waste. Provide explanations for any waste not recycled or reused. With each application for payment, submit updated documentation for solid waste disposal and diversion, and submit manifests, weight tickets, receipts, and invoices specifically identifying the project and waste material. Make the records

available to the Contracting Officer during construction, and deliver to the Contracting Officer upon completion of the constructioninclude in the Sustainability Notebook a copy of the records.

Demolition accomplished by other parties on this project site count toward the project's total waste diversion cumulative score for LEED BD+C and for sustainability requirements. Information on the quantity and disposition of these materials will be provided by the Contracting Officer. Include this data in records, annotated to indicate that it was accomplished by another party.

1.8 COLLECTION

Separate, store, protect, and handle at the site identified recyclable and salvageable waste products in a manner that maximizes recyclability and salvagability of identified materials. Provide the necessary containers, bins and storage areas to facilitate effective waste management and clearly and appropriately identify them. Provide materials for barriers and enclosures around recyclable material storage areas which are nonhazardous and recyclable or reusable. Locate out of the way of construction traffic. Provide adequate space for pick-up and delivery and convenience to subcontractors. Recycling and waste bin areas are to be kept neat and clean, and handle recyclable materials to prevent contamination of materials from incompatible products and materials. Clean contaminated materials prior to placing in collection containers. Use cleaning materials that are nonhazardous and biodegradable. Handle hazardous waste and hazardous materials in accordance with applicable regulations and coordinate with Section 01 57 19 TEMPORARY ENVIRONMENTAL CONTROLS. Separate materials by one of the following methods:

1.8.1 Source Separated Method.

Separate waste products and materials that are recyclable from trash and sorted as described below into appropriately marked separate containers and then transported to the respective recycling facility for further processing. Deliver materials in accordance with recycling or reuse facility requirements (e.g., free of dirt, adhesives, solvents, petroleum contamination, and other substances deleterious to the recycling process). Separate materials into the following category types as appropriate to the project waste and to the available recycling and reuse programs in the project area:

a. Land clearing debris.

b. Asphalt.

c. Concrete and masonry.

d. Metal (e.g. banding, stud trim, ductwork, piping, rebar, roofing, other trim, steel, iron, galvanized, stainless steel, aluminum, copper, zinc, lead brass, bronze).

   (1) Ferrous.

   (2) Non-ferrous.

e. Wood (nails and staples allowed).

f. Debris.

g. Glass (colored glass allowed).

h. Paper.

(1) Bond.

(2) Newsprint.

(3) Cardboard and paper packaging materials.

i. Plastic.

Type	
1	Polyethylene Terephthalate (PET, PETE)
2	High Density Polyethylene (HDPE)
3	Vinyl (Polyvinyl Chloride or PVC)
4	Low Density Polyethylene (LDPE)
5	Polypropylene (PP)
6	Polystyrene (PS)
7	Other. Use of this code indicates that the package in question is made with a resin other than the six listed above, or is made of more than one resin listed above, and used in a multi-layer combination.

j. Gypsum.

k. Non-hazardous paint and paint cans.

l. Carpet.

m. Ceiling tiles.

n. Insulation.

o. Beverage containers.

1.8.2 Co-Mingled Method.

Place waste products and recyclable materials into a single container and then transport to a recycling facility where the recyclable materials are sorted and processed.

1.8.3 Other Methods.

Other proposed methods may be used when approved by the Contracting Officer.

1.9 DISPOSAL

Control accumulation of waste materials and trash. Recycle or dispose of collected materials off-site at intervals approved by the Contracting Officer and in compliance with waste management procedures. Except as otherwise specified in other sections of the specifications, dispose of in accordance with the following:

1.9.1 Reuse.

Give first consideration to salvage for reuse since little or no re-processing is necessary for this method, and less pollution is created when items are reused in their original form. Coordinate reuse with the Contracting Officer. Consider sale or donation of waste suitable for reuse.

1.9.2 Recycle.

Recycle waste materials not suitable for reuse, but having value as being recyclable. Recycle all fluorescent lamps, HID lamps, and mercury-containing thermostats removed from the site. Arrange for timely pickups from the site or deliveries to recycling facilities in order to prevent contamination of recyclable materials.

1.9.3 Waste.

Dispose of materials with no practical use or economic benefit to waste-to-energy plants where available. As the last choice, dispose of materials at a landfill or incinerator.

1.9.4 Return

Set aside and protect misdelivered and substandard products and materials and return to supplier for credit.

PART 2 PRODUCTS

Not used.

PART 3 EXECUTION

Not used. -- End of Section --

SECTION 01 78 00

CLOSEOUT SUBMITTALS
09/15

PART 1 GENERAL

1.1 REFERENCES

The publications listed below form a part of this specification to the extent referenced. The publications are referred to within the text by the basic designation only.

ASTM INTERNATIONAL (ASTM)

ASTM E1971	(2005; R 2011) Stewardship for the Cleaning of Commercial and Institutional Buildings

GREEN SEAL (GS)

GS-37	(2012) Cleaning Products for Industrial and Institutional Use

U.S. DEPARTMENT OF DEFENSE (DOD)

UFC 1-300-08	(2009, Change 2, 2011) Criteria for Transfer and Acceptance of DoD Real Property

1.2 SUBMITTALS

Government approval is required for submittals with a "G" designation; submittals not having a "G" designation are for Contractor Quality Control approval. Submit the following in accordance with Section 01 33 00 SUBMITTAL PROCEDURES:

SD-03 Product Data

As-Built Record of Equipment and Materials
Warranty Management Plan
Warranty Tags
Final Cleaning
Spare Parts Data

SD-08 Manufacturer's Instructions

Preventative Maintenance
Condition Monitoring (Predictive Testing)
Inspection
Posted Instructions

SD-10 Operation and Maintenance Data

Operation and Maintenance Manuals

SD-11 Closeout Submittals

Record Drawings
NAVFAC Sustainable & Energy Data Record Card; G
Certification of EPA Designated Items; G
Preliminary Interim DD Form 1354; G
Updated Interim DD Form 1354; G

1.3 PROJECT RECORD DOCUMENTS

1.3.1 Record Drawings

Drawings showing final as-built conditions of the project. This paragraph covers record drawings complete, as a requirement of the contract. The terms "drawings," "contract drawings," "drawing files," "working record drawings" and "final record drawings" refer to contract drawings which are revised to be used for final record drawings showing as-built conditions. The final CAD record drawings must consist of one set of electronic CAD drawing files in the specified format, 2 sets of prints, and one set of the approved working Record drawings. The manually prepared drawings must consist of 1 set of the original marked-up blueline drawings.

1.3.1.1 Government Furnished Materials

One set of electronic CADD files in the specified software and format revised to reflect all bid amendments will be provided by the Government at the preconstruction conference for projects requiring CADD file record drawings.

1.3.1.2 Working Record and Final Record Drawings

Revise 2 sets of paper drawings by red-line process to show the as-built conditions during the prosecution of the project. Keep these working as-built marked drawings current on a weekly basis and at least one set available on the jobsite at all times. Changes from the contract plans which are made in the work or additional information which might be uncovered in the course of construction must be accurately and neatly recorded as they occur by means of details and notes. Prepare final record (as-built) drawings after the completion of each definable feature of work as listed in the Contractor Quality Control Plan (Foundations, Utilities, Structural Steel, etc., as appropriate for the project). The working as-built marked prints and final record (as-built) drawings will be jointly reviewed for accuracy and completeness by the Contracting Officer and the Contractor prior to submission of each monthly pay estimate. If the Contractor fails to maintain the working and final record drawings as specified herein, the Contracting Officer will deduct from the monthly progress payment an amount representing the estimated cost of maintaining the record drawings. This monthly deduction will continue until an agreement can be reached between the Contracting Officer and the Contractor regarding the accuracy and completeness of updated drawings. Show on the working and final record drawings, but not limited to, the following information:

a. The actual location, kinds and sizes of all sub-surface utility lines. In order that the location of these lines and appurtenances may be determined in the event the surface openings or indicators become covered over or obscured, show by offset dimensions to two permanently fixed surface features the end of each run including each change in direction on the record drawings. Locate valves, splice boxes and similar appurtenances by dimensioning along the utility run from a reference point. Also record the average depth below the

surface of each run.

b. The location and dimensions of any changes within the building structure.

c. Correct grade, elevations, cross section, or alignment of roads, earthwork, structures or utilities if any changes were made from contract plans.

d. Changes in details of design or additional information obtained from working drawings specified to be prepared and/or furnished by the Contractor; including but not limited to fabrication, erection, installation plans and placing details, pipe sizes, insulation material, dimensions of equipment foundations, etc.

e. The topography, invert elevations and grades of drainage installed or affected as part of the project construction.

f. Changes or modifications which result from the final inspection.

g. Where contract drawings or specifications present options, show only the option selected for construction on the final as-built prints.

h. If borrow material for this project is from sources on Government property, or if Government property is used as a spoil area, furnish a contour map of the final borrow pit/spoil area elevations.

i. Systems designed or enhanced by the Contractor, such as HVAC controls, fire alarm, fire sprinkler, and irrigation systems.

j. Modifications (include within change order price the cost to change working and final record drawings to reflect modifications) and compliance with the following procedures.

(1) Follow directions in the modification for posting descriptive changes.

(2) Place a Modification Delta at the location of each deletion.

(3) For new details or sections which are added to a drawing, place a Modification Delta by the detail or section title.

(4) For minor changes, place a Modification Delta by the area changed on the drawing (each location).

(5) For major changes to a drawing, place a Modification Delta by the title of the affected plan, section, or detail at each location.

(6) For changes to schedules or drawings, place a Modification Delta either by the schedule heading or by the change in the schedule.

(7) The Modification Delta size shall be 1/2 inch diameter unless the area where the circle is to be placed is crowded. Smaller size circle shall be used for crowded areas.

(8) Document all field changes to the Landscape drawings including changes in sod area, planting location and type of plant(s). Any field changes made to the Landscape layout must be shown on the LS drawings - also revise the data found in the 'Maintenance Data Tables' found on the Landscape drawings.

1.3.1.3 Drawing Preparation

Modify the record drawings as may be necessary to correctly show the features of the project as it has been constructed by bringing the contract set into agreement with approved working as-built prints, and adding such additional drawings as may be necessary. These working as-built marked prints must be neat, legible and accurate. These drawings are part of the permanent records of this project and must be returned to the Contracting Officer after approval by the Government. Any drawings damaged or lost by the Contractor must be satisfactorily replaced by the Contractor at no expense to the Government.

1.3.1.4 Computer Aided Design and Drafting (CADD) Drawings

Only employ personnel proficient in the preparation of CADD drawings to modify the contract drawings or prepare additional new drawings. Additions and corrections to the contract drawings must be equal in quality and detail to that of the originals. Line colors, line weights, lettering, layering conventions, and symbols must be the same as the original line colors, line weights, lettering, layering conventions, and symbols. If additional drawings are required, prepare them using the specified electronic file format applying the same graphic standards specified for original drawings. The title block and drawing border to be used for any new final record drawings must be identical to that used on the contract drawings. Accomplish additions and corrections to the contract drawings using CADD files. The Contractor will be furnished "as-designed" drawings in AutoCad Release 2016 format compatible with a Windows 7 operating system. The electronic files will be supplied on compact disc, read-only memory (CD-ROM). Provide all program files and hardware necessary to prepare final record drawings. The Contracting Officer will review final record drawings for accuracy and return them to the Contractor for required corrections, changes, additions, and deletions.

a. Provide CADD "base" colors of red, green, and blue. Color code for changes as follows:

   (1) Deletions (Red) - Over-strike deleted graphic items (lines), lettering in notes and leaders.

   (2) Additions (Green) - Added items, lettering in notes and leaders.

   (3) Special (Blue) - Items requiring special information, coordination, or special detailing or detailing notes.

b. Rename the Contract Drawing files in a manner related to the contract number (i.e., 98-C-10.DGN) as instructed in the Pre-Construction conference. Use only those renamed files for the Marked-up changes. All changes shall be made on the layer/level as the original item.

c. When final revisions have been completed, show the wording "RECORD DRAWINGS / AS-BUILT CONDITIONS" followed by the name of the Contractor in letters at least 3/16 inch high on the cover sheet drawing. Mark all other contract drawings either "Record" drawing denoting no revisions on the sheet or "Revised Record" denoting one or more revisions. Date original contract drawings in the revision block.

d. Within 10 days for contracts less than $5 million after Government approval of all of the working record drawings for a phase of work,

prepare the final CADD record drawings for that phase of work and submit two sets of blue-lined prints of these drawings for Government review and approval. The Government will promptly return one set of prints annotated with any necessary corrections. Within 7 days for contracts less than $5 million revise the CADD files accordingly at no additional cost and submit one set of final prints for the completed phase of work to the Government. Within 10 days for contracts less than $5 million of substantial completion of all phases of work, submit the final record drawing package for the entire project. Submit one set of electronic files on compact disc, read-only memory (CD-ROM), one set of mylars, two sets of blue-line prints and one set of the approved working record drawings. They must be complete in all details and identical in form and function to the contract drawing files supplied by the Government. Any transactions or adjustments necessary to accomplish this is the responsibility of the Contractor. The Government reserves the right to reject any drawing files it deems incompatible with the customer's CADD system. Paper prints, drawing files and storage media submitted will become the property of the Government upon final approval. Failure to submit final record drawing files and marked prints as specified will be cause for withholding any payment due the Contractor under this contract. Approval and acceptance of final record drawings must be accomplished before final payment is made to the Contractor.

1.3.1.5 Payment

No separate payment will be made for record drawings required under this contract, and all costs accrued in connection with such drawings are considered a subsidiary obligation of the Contractor.

1.3.2 As-Built Record of Equipment and Materials

Furnish one copy of preliminary record of equipment and materials used on the project 15 days prior to final inspection. This preliminary submittal will be reviewed and returned 2 days after final inspection with Government comments. Submit Two sets of final record of equipment and materials 10 days after final inspection. Key the designations to the related area depicted on the contract drawings. List the following data:

RECORD OF DESIGNATED EQUIPMENT AND MATERIALS DATA				
Description	Specification Section	Manufacturer and Catalog, Model, and Serial Number	Composition and Size	Where Used

1.3.3 Final Approved Shop Drawings

Furnish final approved project shop drawings 30 days after transfer of the completed facility.

1.3.4 Construction Contract Specifications

Furnish final record (as-built) construction contract specifications, including modifications thereto, 30 days after transfer of the completed facility.

1.3.5 Real Property Equipment

Furnish a list of installed equipment furnished under this contract. Include all information usually listed on manufacturer's name plate. In the "EQUIPMENT-IN-PLACE LIST" include, as applicable, the following for each piece of equipment installed: description of item, location (by room number), model number, serial number, capacity, name and address of manufacturer, name and address of equipment supplier, condition, spare parts list, manufacturer's catalog, and warranty. Furnish a draft list at time of transfer. Furnish the final list 30 days after transfer of the completed facility.

1.4 SPARE PARTS DATA

Submit two copies of the Spare Parts Data list.

a. Indicate manufacturer's name, part number, nomenclature, and stock level required for maintenance and repair. List those items that may be standard to the normal maintenance of the system.

1.5 PREVENTATIVE MAINTENANCE

Submit Preventative Maintenance, Condition Monitoring (Predictive Testing) and Inspection schedules with instructions that state when systems should be retested.

a. Define the anticipated length of each test, test apparatus, number of personnel identified by responsibility, and a testing validation procedure permitting the record operation capability requirements within the schedule. Provide a signoff blank for the Contractor and Contracting Officer for each test feature; e.g., gpm, rpm, psi. Include a remarks column for the testing validation procedure referencing operating limits of time, pressure, temperature, volume, voltage, current, acceleration, velocity, alignment, calibration, adjustments, cleaning, or special system notes. Delineate procedures for preventative maintenance, inspection, adjustment, lubrication and cleaning necessary to minimize corrective maintenance and repair.

b. Repair requirements must inform operators how to check out, troubleshoot, repair, and replace components of the system. Include electrical and mechanical schematics and diagrams and diagnostic techniques necessary to enable operation and troubleshooting of the system after acceptance.

1.6 CERTIFICATION OF EPA DESIGNATED ITEMS

Submit the Certification of EPA Designated Items as required by FAR 52.223-9, "Certification and Estimate of Percentage of Recovered Material Content for EPA Designated Items". Include on the certification form the following information: project name, project number, Contractor name, license number, Contractor address, and certification. The certification will read as follows and be signed and dated by the Contractor. "I hereby certify the information provided herein is accurate and that the requisition/procurement of all materials listed on this form comply with current EPA standards for recycled/recovered materials content. The following exemptions may apply to the non-procurement of recycled/recovered content materials: 1) The product does not meet appropriate performance standards; 2) The product is not available within

a reasonable time frame; 3) The product is not available competitively (from two or more sources); 4) The product is only available at an unreasonable price (compared with a comparable non-recycled content product)." Record each product used in the project that has a requirement or option of containing recycled content in accordance with Section 01 33 29 Sustainablity Reporting, noting total price, total value of post-industrial recycled content, total value of post-consumer recycled content, exemptions (1, 2, 3, or 4, as indicated), and comments. Recycled content values may be determined by weight or volume percent, but must be consistent throughout.

1.7 WARRANTY MANAGEMENT

1.7.1 Warranty Management Plan

Develop a warranty management plan which contains information relevant to the clause Warranty of Construction. At least 30 days before the planned pre-warranty conference, submit one set of the warranty management plan. Include within the warranty management plan all required actions and documents to assure that the Government receives all warranties to which it is entitled. The plan must be in narrative form and contain sufficient detail to render it suitable for use by future maintenance and repair personnel, whether tradesmen, or of engineering background, not necessarily familiar with this contract. The term "status" as indicated below must include due date and whether item has been submitted or was accomplished. Warranty information made available during the construction phase must be submitted to the Contracting Officer for approval prior to each monthly pay estimate. Assemble approved information in a binder and turn over to the Government upon acceptance of the work. The construction warranty period will begin on the date of project acceptance and continue for the full product warranty period. A joint 4 month and 9 month warranty inspection will be conducted, measured from time of acceptance, by the Contractor, Contracting Officer and the Customer Representative. Include within the warranty management plan , but not limited to, the following:

a. Roles and responsibilities of all personnel associated with the warranty process, including points of contact and telephone numbers within the organizations of the Contractors, Subcontractors, manufacturers or suppliers involved.

b. Furnish with each warranty the name, address, and telephone number of each of the guarantor's representatives nearest to the project location.

c. Listing and status of delivery of all Certificates of Warranty for extended warranty items, to include roofs, HVAC balancing, pumps, motors, transformers, and for all commissioned systems such as fire protection and alarm systems, sprinkler systems, lightning protection systems, etc.

d. A list for each warranted equipment, item, feature of construction or system indicating:

   (1) Name of item.
   (2) Model and serial numbers.
   (3) Location where installed.
   (4) Name and phone numbers of manufacturers or suppliers.
   (5) Names, addresses and telephone numbers of sources of spare parts.

(6) Warranties and terms of warranty. Include one-year overall warranty of construction, including the starting date of warranty of construction. Items which have extended warranties must be indicated with separate warranty expiration dates.
(7) Cross-reference to warranty certificates as applicable.
(8) Starting point and duration of warranty period.
(9) Summary of maintenance procedures required to continue the warranty in force.
(10) Cross-reference to specific pertinent Operation and Maintenance manuals.
(11) Organization, names and phone numbers of persons to call for warranty service.
(12) Typical response time and repair time expected for various warranted equipment.

e. The Contractor's plans for attendance at the 4 and 9 month post-construction warranty inspections conducted by the Government.

f. Procedure and status of tagging of all equipment covered by extended warranties.

g. Copies of instructions to be posted near selected pieces of equipment where operation is critical for warranty and/or safety reasons.

1.7.2 Performance Bond

The Contractor's Performance Bond must remain effective throughout the construction period.

a. In the event the Contractor fails to commence and diligently pursue any construction warranty work required, the Contracting Officer will have the work performed by others, and after completion of the work, will charge the remaining construction warranty funds of expenses incurred by the Government while performing the work, including, but not limited to administrative expenses.

b. In the event sufficient funds are not available to cover the construction warranty work performed by the Government at the Contractor's expense, the Contracting Officer will have the right to recoup expenses from the bonding company.

c. Following oral or written notification of required construction warranty repair work, respond in a timely manner. Written verification will follow oral instructions. Failure of the Contractor to respond will be cause for the Contracting Officer to proceed against the Contractor.

1.7.3 Pre-Warranty Conference

Prior to contract completion, and at a time designated by the Contracting Officer, meet with the Contracting Officer to develop a mutual understanding with respect to the requirements of this section. Communication procedures for Contractor notification of construction warranty defects, priorities with respect to the type of defect, reasonable time required for Contractor response, and other details deemed necessary by the Contracting Officer for the execution of the construction warranty will be established/reviewed at this meeting. In connection with these requirements and at the time of the Contractor's quality control completion inspection, furnish the name, telephone number and address of a

licensed and bonded company which is authorized to initiate and pursue construction warranty work action on behalf of the Contractor. This point of contact will be located within the local service area of the warranted construction, be continuously available, and be responsive to Government inquiry on warranty work action and status. This requirement does not relieve the Contractor of any of its responsibilities in connection with other portions of this provision.

1.7.4 Warranty Tags

At the time of installation, tag each warranted item with a durable, oil and water resistant tag approved by the Contracting Officer. Attach each tag with a copper wire and spray with a silicone waterproof coating. Also, submit two record copies of the warranty tags showing the layout and design. The date of acceptance and the QC signature must remain blank until the project is accepted for beneficial occupancy. Show the following information on the tag.

Type of product/material	
Model number	
Serial number	
Contract number	
Warranty period from/to	
Inspector's signature	
Construction Contractor	
Address	
Telephone number	
Warranty contact	
Address	
Telephone number	
Warranty response time priority code	
WARNING - PROJECT PERSONNEL TO PERFORM ONLY OPERATIONAL MAINTENANCE DURING THE WARRANTY PERIOD.	

1.8 COMMISSIONING

1.8.1 Building Commissioning

All contract requirements for building commissioning shall be completed prior to contract completion.

1.8.2 HVAC Commissioning

All contract requirements of Section 01 91 00.15 22 TOTAL BUILDING COMMISSIONINGmust be fully completed, including all testing concurrent with Building Commissioning. All contract requirements of Section 23 05 93.00 22 TESTING, ADJUSTING, AND BALANCING OF MECHANICAL SYSTEMS must be fully completed, including testing and inspection, prior to HVAC commissioning, except as noted otherwise in Section 23 05 93.00 22. All contract requirements of Section 23 09 00.00 22 INSTRUMENTATION AND CONTROL FOR HVAC must be fully completed, including all testing, prior to HVAC commissioning. The time required to complete all work and testing as prescribed by Sections 01 91 00.15 22, 23 09 00.00 22, and 23 05 93.00 22 is included in the allotted calendar days for completion.

1.9 OPERATION AND MAINTENANCE MANUALS

Submit 6 copies of the project operation and maintenance manuals 30 calendar days prior to testing the system involved. Update and resubmit data for final approval no later than 30 calendar days prior to contract completion.

1.9.1 Configuration

Operation and Maintenance Manuals must be consistent with the manufacturer's standard brochures, schematics, printed instructions, general operating procedures, and safety precautions. Bind information in manual format and grouped by technical sections. Test data must be legible and of good quality. Light-sensitive reproduction techniques are acceptable provided finished pages are clear, legible, and not subject to fading. Pages for vendor data and manuals must have 0.3937-inch holes and be bound in 3-ring, loose-leaf binders. Organize data by separate index and tabbed sheets, in a loose-leaf binder. Binder must lie flat with printed sheets that are easy to read. Caution and warning indications must be clearly labeled.

1.9.2 Training and Instruction

Submit classroom and field instructions in the operation and maintenance of systems equipment where required by the technical provisions. These services must be directed by the Contractor, using the manufacturer's factory-trained personnel or qualified representatives. Contracting Officer will be given 7 calendar days written notice of scheduled instructional services. Instructional materials belonging to the manufacturer or vendor, such as lists, static exhibits, and visual aids, must be made available to the Contracting Officer.

1.10 CLEANUP

Provide final cleaning in accordance with ASTM E1971 and submit two copies of the listing of completed final clean-up items. Leave premises "broom clean." Comply with GS-37 for general purpose cleaning and bathroom cleaning. Use only nonhazardous cleaning materials, including natural cleaning materials, in the final cleanup. Clean interior and exterior glass surfaces exposed to view; remove temporary labels, stains and foreign substances; polish transparent and glossy surfaces; vacuum carpeted and soft surfaces. Clean equipment and fixtures to a sanitary condition. Replace filters of operating equipment and comply with the Indoor Air Quality (IAQ) Management Plan. Clean debris from roofs, gutters, downspouts and drainage systems. Sweep paved areas and rake clean landscaped areas. Remove waste and surplus materials, rubbish and

construction facilities from the site. Recycle, salvage, and return construction and demolition waste from project in accordance with the Waste Management Plan. Promptly and legally transport and dispose of any trash. Do not burn, bury, or otherwise dispose of trash on the project site.

1.11 REAL PROPERTY RECORD

DD Form 1354 "Transfer and Acceptance of Military Real Property" is utilized to record and maintain the Base's real property inventory and to manage capital improvements costs.

A Draft DD Form 1354 is attached to this section. Note: The Draft DD Form 1354 will not contain cost or quantity information. The Contractor shall provide this information based on "as constructed" conditions.

Near the completion of the project, but a minimum of 60 days prior to the projected Beneficial Occupancy Date (BOD), update the Draft DD Form 1354 and submit a Preliminary Interim DD Form 1354, accounting for all installed property. Required data will include costs, quantities, units of measure, etc. as indicated on the DD Form 1354. Include any additional assets/improvements/alterations from the Draft DD Form 1354. An Excel version of this document can be provided by the Government for use in providing this data. Contact the Contracting Officer for any project specific information necessary to complete the DD Form 1354.

The DD Form 1354 shall be prepared in accordance with UFC 1-300-08, available at http://www.wbdg.org/ccb/browse_cat.php?o=29&c=4.

Submit an Updated Interim DD Form 1354 for approval with the Final Invoice. The Updated Interim DD Form 1354 shall address all requested revisions to the Preliminary Interim DD Form 1354 and shall be updated to contain Contractor's "Final" quantity and cost information.

The Final DD Form 1354 will be prepared by the Activity Real Property Accountability Officer (RPAO) at final project closeout after all outstanding issues have been resolved. The Final DD Form 1354 will be prepared using the Contractor provided project data.

1.11.1 MCB Camp Lejeune / MCAS New River

Point of Contact (POC) for assistance in completing the DD Form 1354:

Facilities Planner
Installation Dev Div/Fac Planning Branch
Building 12 Marine Corps Base
PSC Box 20004
Camp Lejeune, NC 28542-0004
Phone: (910) 451-1833

Coordinate with Section 01 20 00.00 20 PRICE AND PAYMENT PROCEDURES paragraph "EARNED VALUE REPORT".

The Contractor's Earned Value Report shall allocate the total cost of construction to the appropriate category codes. If a supporting facility feature has a unique category code, it shall be listed separately on the DD Form 1354. If a supporting facility does not have a unique category code the costs associated with the feature shall be included in the primary facility cost.

When documenting demolition work, the DD Form 1354 shall list the quantitative data associated with this work as a negative value to show the costs should be deleted from the Navy Asset Data Store. Coordinate with the POCs listed above in determining the negative value for demolition work.

The Contractor shall complete DD Form 1354 to the satisfaction of the Installation Development Division of MCB Camp Lejeune.

1.12 GEOSPATIAL INFORMATION SYSTEMS (GIS) DELIVERABLES

Provide geospatial data and documents for all features added, demolished or modified as part of this project in accordance with Section 01 78 30.00 22 DIGITAL DATA DELIVERABLES (GIS).

1.13 NAVFAC SUSTAINABLE & ENERGY DATA RECORD CARD

Within 60 days of the completion of Project, complete an electronic copy of the NAVFAC Sustainable & Energy Data Record Card, and submit to the Contracting Officer. Draft Record card for this project should be available from Designer of Record (DOR) or Contracting Officer. Instructions and a blank DD Form (fill-able) in ADOBE (PDF) may be obtained at the Whole Building Design Guide web site by navigating: Home > Participating Agencies > Department of Defense (DoD) > NAVFAC Sustainable Development Program > Contract Documents > NAVFAC Sustainable & Energy Data Record Card; or directly at http://www.wbdg.org/pdfs/navfac_sustainable_energy_data_record_card.pdf.

PART 2 PRODUCTS

Not Used.

PART 3 EXECUTION

Not Used.

-- End of Section --

TITLE: MARINE SPECIAL OPS 120 MAN CLASSROOM, MCB CAMP LEJEUNE, NC (17P1482)

TRANSFER AND ACCEPTANCE OF MILITARY REAL PROPERTY

Form Approved
OMB No. 0704-0188

The public reporting burden for the collection of information is estimated to average 30 minutes per response, including the time for reviewing instructions, searching existing data sources, gathering and maintaining the data needed and completing and reviewing the collection of information. Send comments regarding this burden estimate or any other aspect of this collection of information, including suggestions for reducing the burden, to the Department of Defense, Executive Services and Communications Directorate (0704-0188). Respondents should be aware that notwithstanding any other provision of law, no person shall be subject to any penalty for failing to comply with a collection of information if it does not display a currently valid OMB control number.

PLEASE DO NOT RETURN YOUR COMPLETED FORM TO THE ABOVE ORGANIZATION

1. FROM (Installation/Activity/District and ZIP Code)

2. DATE PREPARED (YYYYMMDD): 20200608

3. PROJECT/JOB NUMBER: 17P1482

4. SERIAL NUMBER

5. TO (Installation/Activity/Service, ZIP Code & INSNO)
COMMANDING GENERAL
ATTN: PUBLIC WORKS DIVISION
MARINE CORPS BASE
PSC BOX 20004
CAMP LEJEUNE, NC 28542-0004

6. SITE/INSN0/ NAME: M67001

7. CONTRACT NUMBER(S)

7a. PLACED-IN-SERVICE DATE (YYYYMMDD)

8. TRANSACTION DETAILS

a. ☑ NEW CONST.
☐ EXISTING FAC.
☐ CAPITAL IMP.
☐ OTHER (Specify)

b. ☐ PHYS. COM. AVAIL.
☐ BENF/O
☐ PARTIAL BOD
☐ FINANCIAL COM.
☐ OTHER (Specify)

c. ☑ DRAFT ☐ FINAL
☐ INTERIM

d. EFFECTIVE DATE (YYYYMMDD)

9. ITEM NO.	10a. FACILITY NO.	10b. RPUID	11. CATEGORY CODE	12. CATCODE DESCRIPTION	13. TYPE CODE	AREA 14. UNIT OF MEAS 1	AREA 15. TOTAL QUANTITY UM 1	OTHER 16. UNIT OF MEAS 2	OTHER 17. TOTAL QUANTITY UM2	18. COST	19. FUND SOURCE	20. FUND ORG	21. INTER-EST CODE	22. ITEM REMARKS
1			17110	ACADEMIC INSTRUCTION BUILDING	P	SF					1			
2			13510	COMMUNICATION-LINES - OTHER THAN TELEPHONE	P									
3			13520	TELEPHONE LINES	P									
4			81220	STREET LIGHTING	P									
5			87110	STORM SEWER	P	LF								
6														
7														

23a. TRANSFERRED BY (Typed Name and Signature)

23b. DATE SIGNED (YYYYMMDD)

24a. ACCEPTED BY (Typed Name and Signature)

24b. DATE SIGNED (YYYYMMDD)

23c. TITLE (Area Engr./Base Engr./DPW)

24c. TITLE (DPW/RPAO)

25. PROPERTY VOUCHER NUMBER

26. CONSTRUCTION DEFICIENCIES (attach blank sheet for continuations)

THIRD MEASUREMENT =

NOTE: THE ATTACHED SUPPORT FACILITY NUMBERS AND CATCODES ARE NOT ALL INCLUSIVE. THEY ARE LISTED HERE AS A COURTESY ONLY.

27. PROJECT REMARKS (attach blank sheet for continuation)

Height: Width: Length: Regular:

S & A Cost:
Construction Cost:
Subtotal:
Equipment Cost:
Total Project Cost:

DD 1354 Prepared by

INSTRUCTIONS

GENERAL. This form has been designed and issued for use in connection with the transfer of military real property between the military departments and to or from other government agencies. It supersedes ENG Forms 290 and 290B (formerly used by the Army and Air Force) and NAVDOCKS Form 2317 (formerly used by the Navy).

Existing instructions issued by the military departments relative the the preparation of DD Form 1354 are applicable to this revised form to the extent that the various items and columns on the superseded forms have been retained. The military departments may promulgate additional instructions, as appropriate.

For detailed instructions on how to fill out this form, please refer to Unified Facilities Criteria (UFC) 1-300-08, dated 16 April 2009 or later.

SPECIFIC DATA ITEMS.

1. From. Name and address of the transferring agency.

2. Date Prepared. Date of actual preparation. Enter all dates in YYYYMMDD format (Example: March 31, 2004 = 20040331).

3. Project/Job Number. Project number on a DD Form 1354 or Individual Job Order Number.

4. Serial Number. Sequential serial number assigned by the preparing organization. (e.g., 2004-0001).

5. To. Name and address of the receiving installation, activity, and service of the Real Property Accountable Officer (RPAO).

6. Site/INSNO and Name. Site or installation number and site name where the constructed facility is located.

7. Contract Number(s). Contract number(s) for this project.

7a. Placed-In-Service Date. RPA Placed In Service Date. This is the date the asset is actually placed-in-service.

8. Transaction Details.

a. Type of Transaction. Mark (X) only one box.

b. When/Event. When or event causing preparation of DD Form 1354. X only one box.

c. Version, Draft, Interim, or Final DD Form 1354. X only one box.

d. Effective Date. Effective date for transaction; start date of depreciation.

9. Item Number. Use a separate item number for each facility, no item number for additional usages.

10a. Facility Number. Unique facility number identified in Real Property Inventory.

10b. RPUID. Real Property Unique Identifier - Identified in Real Property Inventory.

11. Category Code. The category code describes the facility usage.

12. Catcode Description. The category code name which describes the facility usage.

13. Type Code. Type of construction. **P** for Permanent; **S** for Semipermanent; **T** for Temporary

14. Area: Unit of Meas 1. Area unit of measure; use SF, SY, AC only

15. Total Quantity UM 1. The total area for the measure identified in Item 15. Use negative numbers for demolition.

16. Other: Unit of Meas 2. Unit of Measure 2 is the capacity or other measurement unit (e.g., LF, MB, EA, etc..).

17. Total Quantity UM 2. The total capacity/other for the measure identified in Item 17.

18. Cost. Cost for each facility; for capital improvements to existing facilities, show amount of increase only.

19. Fund Source. Enter the Fund Source Code for this item, i.e., 01-MILCON, 02-BRAC, 03-O&M, etc.

20. Funding Organization. Enter the code for the organization responsible for replacing this facility at the end of its useful life, i.e., 00-Army Active, 01-Army Reserve, 02-Army National Guard, etc.

21. Interest Code. Enter the code that reflects government interest or ownership in the facility, i.e., 01-Owned by DoD, 02-Owned by Federal Government (non-DoD), etc.

22. Item Remarks. Remarks pertaining only to the item number identified in Item 10; show cost sharing.

23. Statement of Completion. Typed name, signature, title, and date of signature by the responsible transferring individual or agent.

24. Accepted By. Typed name, signature, title, and date of signature by the RPAO or accepting official.

25. Property Voucher Number. Next sequential number assigned by the RPAO in voucher register.

26. Construction Deficiencies. List construction deficiencies in project during contractor turnover inspection.

27. Project Remarks. Project level remarks, continuation of blocks, and used to explain "other" entries in Item 9.

TITLE: MARINE SPECIAL OPS 120 MAN CLASSROOM, MCB CAMP LEJEUNE, NC (17P 1482)

						AREA		OTHER						
9. ITEM NO.	10a. FACILITY NO.	10b. RPUID	11. CATEGORY CODE	12. CATCODE DESCRIPTION	13. TYPE CODE	14. UNIT OF MEAS 1	15. TOTAL QUANTITY UM 1	16. UNIT OF MEAS 2	17. TOTAL QUANTITY UM2	18. COST	19. FUND SOURCE	20. FUND ORG	21. INTER-EST CODE	22. ITEM REMARKS
8			81231	OVERHEAD ELECTRICAL DISTRIBUTION LINES										
9			81232	UNDERGROUND ELECTRICAL DISTRIBUTION LINES										
10			81240	AREA LIGHTING										
11			83210	SANITARY SEWER										
12			84120	WATER SUPPLY MAINS										
13			84210	WATER DISTRIBUTION POTABLE BASE										
14			84310	FIRE PROTECTION WATER DISTRIBUTION	20200608									
15			84450	STORMWATER POND										
16			85210	PARKING AREA										
17			85220	SIDEWALK										
18			87110	STORM SEWER										
19			88010	FIRE-ALARM SYSTEM										
20			93310	DEMOLITION										
21														
22														
23														

DD Form 1354 Addendum

CLASS 2 PROPERTY RECORD DATA

ACTIVITY UIC: _____DD Form 1354, Item 6
ACTIVITY NAME: _____DD Form 1354, Item 5
SPEC AREA_____
PR NO _____
FACILITY NO: _____DD Form 1354, Item 11

LOCATION GENERAL INFO
COUNTRY: iNFADS fills this based on UIC and Special Area
RPTG-CLMT-UIC _____
ACTION TYPE _____(Acquisition, Capital Improvement, Disposal)
STATE: iNFADS fills this based on UIC and Special Area
COUNTY: iNFADS fills this based on UIC and Special Area
CITY: iNFADS fills this based on UIC and Special Area
FACILITY NAME: _____Completed by gaining installation
MAP GRID: _____Completed by gaining installation
FORMER ACTIVITY UIC: _____DD Form 1354, Item 1, Transfer only
FORMER PR NO.: _____Transfers within Dept of Navy only
FACILITY TYPE: _____Determined by Prime Use Category Code
FAMILY HOUSING INDICATOR: _____ Y/N

MEASUREMENTS
LENGTH_____
WIDTH_____
HEIGHT_____
DEPTH_____
AREA/UM_____
STORIES_____
IRREGULAR_____(Y or N)
ATTIC____ (Y or N)
BASEMENT____(Y or N)
MEZZANINE___(Y or N)
PENTHOUSE____(Y or N)

CONSTRUCTION
YEAR BUILT_____ (New Construction)
YEAR IMPROVED _____ (Capital Improvement)
CURR PROJ NO_____ (Capital Improvement)

DD Form 1354 Addendum

ORIG PROJ NO_____ (New Construction)
CONSTRUCTION TYPE_____(P, S, T, or R)
HERITAGE ASSET DATA –_____ Transfers only

MAINTENANCE
PRIME USE CAT CODE_____ (Largest Category Code for facility on DD Form 1354, Item 12)
MAINT FUND CODE_____ (Supplied by gaining installation)
MAINT RESP_____ (Supplied by gaining installation)
COST REF DOCUMENT NUMBERS: _____DD Form 1354, Item 7

EXCESS / DISPOSAL (DISPOSAL DD FORM 1354 ONLY)
EXCESS ACTION CODE_____
EXCESS ACTION DATE_____
DISPOSAL METHOD_____
DISPOSAL DATE_____
EFD DISPOSAL CONTRACT_____
GSA DISPOSAL CONTRACT_____
DISP CONSOL PR_____

STATUS / UTILIZATION
USER UIC/OG ID_____ (Supplied by gaining installation)
CATEGORY CODE_____ DD Form 1354, Item 12
USE_____(Optional)
AREA/UM_____ DD Form 1354, Items 15 and 16
OTHER/UM_____ DD Form 1354, Items 17 and 18
ALT/UM _____ Must be put in Remarks section of DD Form 1354, where applicable.

SECTION 01 78 23

OPERATION AND MAINTENANCE DATA
09/15

PART 1 GENERAL

1.1 REFERENCES

The publications listed below form a part of this specification to the extent referenced. The publications are referred to within the text by the basic designation only.

ASTM INTERNATIONAL (ASTM)

ASTM E1971	(2005; R 2011) Stewardship for the Cleaning of Commercial and Institutional Buildings

1.2 SUBMISSION OF OPERATION AND MAINTENANCE DATA

Submit Operation and Maintenance (O&M) Data specifically applicable to this contract and a complete and concise depiction of the provided equipment, product, or system, stressing and enhancing the importance of system interactions, troubleshooting, and long-term preventative maintenance and operation. The subcontractors must compile and prepare data and deliver to the Contractor prior to the training of Government personnel. The Contractor must compile and prepare aggregate O&M data including clarifying and updating the original sequences of operation to as-built conditions. Organize and present information in sufficient detail to clearly explain O&M requirements at the system, equipment, component, and subassembly level. Include an index preceding each submittal. Submit in accordance with this section, Section 01 78 24.00 20 FACILITY ELECTRONIC OPERATION AND MAINTENANCE SUPPORT INFORMATION (eOMSI), and Section 01 33 00 SUBMITTAL PROCEDURES.

1.2.1 Package Quality

Documents must be fully legible. Poor quality copies and material with hole punches obliterating the text or drawings will not be accepted.

1.2.2 Package Content

Data package content shall be as shown in the paragraph titled "Schedule of Operation and Maintenance Data Packages." Comply with the data package requirements specified in the individual technical sections, including the content of the packages and addressing each product, component, and system designated for data package submission, except as follows. Commissioned items without a specified data package requirement in the individual technical sections must use Data Package 4. Commissioned items with a Data Package 1 or 2 requirement must use instead Data Package 4.

1.2.3 Changes to Submittals

Manufacturer-originated changes or revisions to submitted data must be furnished by the Contractor if a component of an item is so affected subsequent to acceptance of the O&M Data. Submit changes, additions, or revisions required by the Contracting Officer for final acceptance of

submitted data within 30 calendar days of the notification of this change requirement.

1.2.4 Review and Approval

The Government's Commissioning Authority (CA) must review the commissioned systems and equipment submittals for completeness and applicability. The Government CA must verify that the systems and equipment provided meet the requirements of the Contract documents and design intent, particularly as they relate to functionality, energy performance, water performance, maintainability, sustainability, system cost, indoor environmental quality, and local environmental impacts. The CA will communicate deficiencies to the Contracting Officer. Upon a successful review of the corrections, the CA must recommend approval and acceptance of these O&M manuals to the Contracting Officer. This work is in addition to the normal review procedures for O&M data.

1.2.5 O&M Database

Develop a database from the O&M manuals that contains the information required to start a preventative maintenance program.

1.3 TYPES OF INFORMATION REQUIRED IN O&M DATA PACKAGES

1.3.1 Operating Instructions

Include specific instructions, procedures, and illustrations for the following phases of operation for the installed model and features of each system:

1.3.1.1 Safety Precautions

List personnel hazards and equipment or product safety precautions for all operating conditions.

1.3.1.2 Operator Prestart

Include procedures required to install, set up, and prepare each system for use.

1.3.1.3 Startup, Shutdown, and Post-Shutdown Procedures

Provide narrative description for Startup, Shutdown and Post-shutdown operating procedures including the control sequence for each procedure.

1.3.1.4 Normal Operations

Provide narrative description of Normal Operating Procedures. Include Control Diagrams with data to explain operation and control of systems and specific equipment.

1.3.1.5 Emergency Operations

Include Emergency Procedures for equipment malfunctions to permit a short period of continued operation or to shut down the equipment to prevent further damage to systems and equipment. Include Emergency Shutdown Instructions for fire, explosion, spills, or other foreseeable contingencies. Provide guidance and procedures for emergency operation of all utility systems including required valve positions, valve locations

and zones or portions of systems controlled.

1.3.1.6 Operator Service Requirements

Include instructions for services to be performed by the operator such as lubrication, adjustment, inspection, and recording gage readings.

1.3.1.7 Environmental Conditions

Include a list of Environmental Conditions (temperature, humidity, and other relevant data) that are best suited for the operation of each product, component or system. Describe conditions under which the item equipment should not be allowed to run.

1.3.2 Preventive Maintenance

Include the following information for preventive and scheduled maintenance to minimize corrective maintenance and repair for the installed model and features of each system. Include potential environmental and indoor air quality impacts of recommended maintenance procedures and materials.

1.3.2.1 Lubrication Data

Include preventative maintenance lubrication data, in addition to instructions for lubrication provided under paragraph titled "Operator Service Requirements":

a. A table showing recommended lubricants for specific temperature ranges and applications.

b. Charts with a schematic diagram of the equipment showing lubrication points, recommended types and grades of lubricants, and capacities.

c. A Lubrication Schedule showing service interval frequency.

1.3.2.2 Preventive Maintenance Plan and Schedule

Include manufacturer's schedule for routine preventive maintenance, inspections, tests and adjustments required to ensure proper and economical operation and to minimize corrective maintenance. Provide manufacturer's projection of preventive maintenance work-hours on a daily, weekly, monthly, and annual basis including craft requirements by type of craft. For periodic calibrations, provide manufacturer's specified frequency and procedures for each separate operation.

1.3.2.3 Cleaning Recommendations

Provide environmentally preferable cleaning recommendations in accordance with ASTM E1971.

1.3.3 Corrective Maintenance (Repair)

Include manufacturer's recommended procedures and instructions for correcting problems and making repairs for the installed model and features of each system. Include potential environmental and indoor air quality impacts of recommended maintenance procedures and materials.

1.3.3.1 Troubleshooting Guides and Diagnostic Techniques

Include step-by-step procedures to promptly isolate the cause of typical malfunctions. Describe clearly why the checkout is performed and what conditions are to be sought. Identify tests or inspections and test equipment required to determine whether parts and equipment may be reused or require replacement.

1.3.3.2 Wiring Diagrams and Control Diagrams

Wiring diagrams and control diagrams shall be point-to-point drawings of wiring and control circuits including factory-field interfaces. Provide a complete and accurate depiction of the actual job specific wiring and control work. On diagrams, number electrical and electronic wiring and pneumatic control tubing and the terminals for each type, identically to actual installation configuration and numbering.

1.3.3.3 Maintenance and Repair Procedures

Include instructions and a list of tools required to repair or restore the product or equipment to proper condition or operating standards.

1.3.3.4 Removal and Replacement Instructions

Include step-by-step procedures and a list of required tools and supplies for removal, replacement, disassembly, and assembly of components, assemblies, subassemblies, accessories, and attachments. Provide tolerances, dimensions, settings and adjustments required. Instructions shall include a combination of text and illustrations.

1.3.3.5 Spare Parts and Supply Lists

Include lists of spare parts and supplies required for maintenance and repair to ensure continued service or operation without unreasonable delays. Special consideration is required for facilities at remote locations. List spare parts and supplies that have a long lead-time to obtain.

1.3.4 Corrective Maintenance Work-Hours

Include manufacturer's projection of corrective maintenance work-hours including requirements by type of craft. Corrective maintenance that requires completion or participation of the equipment manufacturer shall be identified and tabulated separately.

1.3.5 Appendices

Provide information required below and information not specified in the preceding paragraphs but pertinent to the maintenance or operation of the product or equipment. Include the following:

1.3.5.1 Product Submittal Data

Provide a copy of all SD-03 Product Data submittals required in the applicable technical sections.

1.3.5.2 Manufacturer's Instructions

Provide a copy of all SD-08 Manufacturer's Instructions submittals required in the applicable technical sections.

1.3.5.3 O&M Submittal Data

Provide a copy of all SD-10 Operation and Maintenance Data submittals required in the applicable technical sections.

1.3.5.4 Parts Identification

Provide identification and coverage for all parts of each component, assembly, subassembly, and accessory of the end items subject to replacement. Include special hardware requirements, such as requirement to use high-strength bolts and nuts. Identify parts by make, model, serial number, and source of supply to allow reordering without further identification. Provide clear and legible illustrations, drawings, and exploded views to enable easy identification of the items. When illustrations omit the part numbers and description, both the illustrations and separate listing shall show the index, reference, or key number that will cross-reference the illustrated part to the listed part. Parts shown in the listings shall be grouped by components, assemblies, and subassemblies in accordance with the manufacturer's standard practice. Parts data may cover more than one model or series of equipment, components, assemblies, subassemblies, attachments, or accessories, such as typically shown in a master parts catalog

1.3.5.5 Warranty Information

List and explain the various warranties and clearly identify the servicing and technical precautions prescribed by the manufacturers or contract documents in order to keep warranties in force. Include warranty information for primary components such as the compressor of air conditioning system.

1.3.5.6 Personnel Training Requirements

Provide information available from the manufacturers that is needed for use in training designated personnel to properly operate and maintain the equipment and systems.

1.3.5.7 Testing Equipment and Special Tool Information

Include information on test equipment required to perform specified tests and on special tools needed for the operation, maintenance, and repair of components.

1.3.5.8 Testing and Performance Data

Include completed prefunctional checklists, functional performance test forms, and monitoring reports. Include recommended schedule for retesting and blank test forms.

1.3.5.9 Contractor Information

Provide a list that includes the name, address, and telephone number of the General Contractor and each Subcontractor who installed the product or equipment, or system. For each item, also provide the name address and telephone number of the manufacturer's representative and service organization that can provide replacements most convenient to the project site. Provide the name, address, and telephone number of the product, equipment, and system manufacturers.

1.4 TYPES OF INFORMATION REQUIRED IN CONTROLS O&M DATA PACKAGES

Include Data Package 5 and the following for control systems:

a. Narrative description on how to perform and apply all functions, features, modes, and other operations, including unoccupied operation, seasonal changeover, manual operation, and alarms. Include detailed technical manual for programming and customizing control loops and algorithms.

b. Full as-built sequence of operations.

c. Copies of all checkout tests and calibrations performed by the Contractor (not Cx tests).

d. Full points list. A listing of rooms shall be provided with the following information for each room:

(1) Floor

(2) Room number

(3) Room name

(4) Air handler unit ID

(5) Reference drawing number

(6) Air terminal unit tag ID

(7) Heating and/or cooling valve tag ID

(8) Minimum cfm

(9) Maximum cfm

e. Full print out of all schedules and set points after testing and acceptance of the system.

f. Full as-built print out of software program.

g. Electronic File:

(1) Assemble each manual into a composite electronically indexed file in PDF format. Provide HDD’s, DVD's or CD's as appropriate, so that each one contains all maintenance and record files, and also the Project Record Documents and Training Videos, of the entire program for this facility.

(2) Name each indexed document file in composite electronic index with applicable item name. Include a complete electronically linked operation and maintenance directory.

(3) Link the index to separate files within the composite of files. Book mark maintenance and record files, that have a Table of Contents, according to the Table of Contents

h. Marking of all system sensors and thermostats on the as-built floor plan and mechanical drawings with their control system designations.

1.5 SCHEDULE OF OPERATION AND MAINTENANCE DATA PACKAGES

Furnish the O&M data packages specified in individual technical sections. The required information for each O&M data package is as follows:

1.5.1 Data Package 1

a. Safety precautions

b. Cleaning recommendations

c. Maintenance and repair procedures

d. Warranty information

e. Contractor information

f. Spare parts and supply list

1.5.2 Data Package 2

a. Safety precautions

b. Normal operations

c. Environmental conditions

d. Lubrication data

e. Preventive maintenance plan and schedule

f. Cleaning recommendations

g. Maintenance and repair procedures

h. Removal and replacement instructions

i. Spare parts and supply list

j. Parts identification

k. Warranty information

l. Contractor information

1.5.3 Data Package 3

a. Safety precautions

b. Operator prestart

c. Startup, shutdown, and post-shutdown procedures

d. Normal operations

e. Emergency operations

f. Environmental conditions

g. Lubrication data

h. Preventive maintenance plan and schedule

i. Cleaning recommendations

j. Troubleshooting guides and diagnostic techniques

k. Wiring diagrams and control diagrams

l. Maintenance and repair procedures

m. Removal and replacement instructions

n. Spare parts and supply list

o. Product submittal data

p. O&M submittal data

q. Parts identification

r. Warranty information

s. Testing equipment and special tool information

t. Testing and performance data

u. Contractor information

1.5.4 Data Package 4

a. Safety precautions

b. Operator prestart

c. Startup, shutdown, and post-shutdown procedures

d. Normal operations

e. Emergency operations

f. Operator service requirements

g. Environmental conditions

h. Lubrication data

i. Preventive maintenance plan and schedule

j. Cleaning recommendations

k. Troubleshooting guides and diagnostic techniques

l. Wiring diagrams and control diagrams

m. Maintenance and repair procedures

n. Removal and replacement instructions

o. Spare parts and supply list

p. Corrective maintenance man-hours

q. Product submittal data

r. O&M submittal data

s. Parts identification

t. Warranty information

u. Personnel training requirements

v. Testing equipment and special tool information

w. Testing and performance data

x. Contractor information

1.5.5 Data Package 5

a. Safety precautions

b. Operator prestart

c. Start-up, shutdown, and post-shutdown procedures

d. Normal operations

e. Environmental conditions

f. Preventive maintenance plan and schedule

g. Troubleshooting guides and diagnostic techniques

h. Wiring and control diagrams

i. Maintenance and repair procedures

j. Removal and replacement instructions

k. Spare parts and supply list

l. Product submittal data

m. Manufacturer's instructions

n. O&M submittal data

o. Parts identification

p. Testing equipment and special tool information

q. Warranty information

r. Testing and performance data

s. Contractor information

PART 2 PRODUCTS

Not Used.

PART 3 EXECUTION

Not Used.

-- End of Section --

SECTION 01 78 24.00 20

FACILITY ELECTRONIC OPERATION AND MAINTENANCE SUPPORT INFORMATION (eOMSI)
02/15

PART 1 GENERAL

1.1 REFERENCES

The publications listed below form a part of this specification to the extent referenced. The publications are referred to within the text by the basic designation only.

U.S. DEPARTMENT OF DEFENSE (DOD)

FC 1-300-09N	(2014; with Change 4, 2018) Navy and Marine Corps Design

1.2 DEFINITIONS AND ABBREVIATIONS

1.2.1 eOMSI Manual

Manual (PDF file) provided by the Contractor that includes, but is not limited to, product information, a facility description with photos, and a list of primary facility systems.

1.2.2 Systems

The words "system", "systems", and "equipment", when used in this document refer to as-built systems and equipment.

1.2.3 Computer Assisted Design and Drafting (CADD)

Electronic Computer Assisted Design and Drafting graphic software program that is used to create facility design contract documents and Record Drawings.

1.2.4 KTR

An abbreviation for "Contractor."

1.3 EOMSI MEETINGS

1.3.1 Pre-Construction Meeting

Be prepared to discuss the following during this meeting:

a. eOMSI Manual Development Meetings

b. Processes and methods of gathering eOMSI Manual information during construction.

c. The eOMSI Submittals schedule. Include the eOMSI submittal schedule on the Baseline Construction Schedule in accordance with Section 01 32 17.00 20 COST-LOADED NETWORK ANALYSIS SCHEDULE (NAS).

1.3.2 eOMSI Manual Coordination Meeting

Facilitate a meeting after the Pre-Construction Meeting prior to the submission of the eOMSI Progress Submittal. Meeting attendance must include the Contractor's eOMSI Manual Preparer, and Quality Control Manager, and the Government's Design Manager (DM), Contracting Officer's Representative, and NAVFAC Public Works (PW) Facilities Management Division (FMD). Include any Mechanical, Electrical, and Fire Protection Sub-Contractors.

The purpose of this meeting is to reach a mutual understanding of the scope of work concerning the contract requirements for eOMSI and coordinate the efforts necessary by both the Government and Contractor to ensure an accurate collection, preparation and timely Government review of eOMSI.

1.3.3 Facility Turnover Meeting

Include eOMSI in NAVFAC Red Zone (NRZ) facility turnover meetings as specified in Section 01 30 00, ADMINISTRATIVE REQUIREMENTS.

1.4 SUBMITTAL SCHEDULING

1.4.1 eOMSI, Progress Submittal

Submit the Progress submittal when construction is approximately 50 percent complete, to the Contracting Officer for approval. Provide eOMSI Manual Files (Bookmarked PDF). Include the elements and portions of system construction completed up to this point.

The purpose of this submittal is to verify progress is in accordance with contract requirements as discussed during the eOMSI Coordination Meeting. Field verify a portion of the eOMSI information in accordance with paragraph FIELD VERIFICATION.

1.4.2 eOMSI, Prefinal Submittal

Submit the 100 percent submittal of the eOMSI Prefinal Submittal to the Contracting Officer for approval within 90 calendar days of the Beneficial Occupancy Date (BOD). This submittal must provide a complete, working document that can be used to operate and maintain the facility. Any portion of the submittal that is incomplete or inaccurate requires the entire submittal to be returned for correction. Any discrepancies discovered during the Government's review of eOMSI Progress submittal must be corrected prior to the Prefinal submission.

The eOMSI Prefinal Submittal must include eOMSI Manual Files (Bookmarked PDF).

1.4.3 eOMSI, Final Submittal

Submit completed eOMSI Manual Files (Bookmarked PDF). The Final submittal is due at BOD. Any discrepancies discovered during the Government's review of the Prefinal eOMSI submittal, including the Field Verification, must be corrected prior to the Final eOMSI submission.

1.5 UNITS OF MEASURE

Provide eOMSI utilizing the units of measure used in the Government generated contract documents.

1.6 SUBMITTALS

Government approval is required for submittals with a "G" designation; submittals not having a "G" designation are for Contractor Quality Control approval. Submittals with an "S" are for inclusion in the Sustainability eNotebook, in conformance with Section 01 33 29 SUSTAINABILITY REPORTING. Submit the following in accordance with Section 01 33 00 SUBMITTAL PROCEDURES:

SD-11 Closeout Submittals

eOMSI, Progress Submittal; G

eOMSI, Prefinal Submittal; G

eOMSI, Final Submittal; G

PART 2 PRODUCTS

2.1 eOMSI FILES FORMAT

Format eOMSI manuals and files in accordance with Section 01 78 23 OPERATION AND MAINTENANCE DATA. Include a complete electronically linked operation and maintenance directory. Provide four electronic copies of the eOMSI Manuals to the Contracting Officer for approval.

Scan eOMSI Manual Files for viruses, malware, and spyware using a commercially available scanning program that is routinely updated to identify and remove current virus threats.

2.1.1 eOMSI Manual Organization

Organize the eOMSI Manuals into two parts: 1) Product and Drawing Information, and 2) Facility Information. Bookmark the PDF files for easy access to the information.

a. Bookmark Product and Drawing Information documents in accordance with Section 01 78 23 OPERATION AND MAINTENANCE DATA.

b. Bookmark Facility Information to at least one level lower than the major system.

2.1.2 eOMSI Manual CD or DVD Disk Label and Disk Holder or Case

Provide disks in accordance with Section 01 78 23 OPERATION AND MAINTENANCE DATA.

2.2 eOMSI MANUAL

2.2.1 Product and Drawing Information

Provide an organized record of the facility products, materials, equipment, and minimum information necessary to operate the facility. Provide Product and Drawing Information for the systems in the final constructed facility.

2.2.1.1 O&M Data

As a minimum, provide the approved O&M Data, submitted in the technical

specification sections, in accordance with paragraph TYPES OF INFORMATION REQUIRED IN O&M DATA PACKAGES in Section 01 78 23 OPERATION AND MAINTENANCE DATA.

2.2.1.2 Record Drawings

Provide an electronic, PDF copy of the Record Drawings, prepared in accordance with FC 1-300-09N and 01 78 00 CLOSEOUT SUBMITTALS. Bookmark drawings using the sheet title and sheet number.

Include Record Drawings as part of the Red-Zone specified in Section 01 30 00 ADMINISTRATIVE REQUIREMENTS.

2.2.1.3 Utility Record Drawings

Using Record Source Drawings, show and document details of the actual installation of the utility systems; annotate and highlight the eOMSI information. Provide Utility Record Drawings in PDF format. Provide the following drawings at a large enough scale to differentiate designated isolation units from surrounding valves and switches.

a. Utility Schematic Diagrams - Provide a one line schematic diagram for each utility system such as power, water, wastewater, and gas/fuel. Schematic diagram must show from the point where the utility line is connected to the mainline up to the five-foot connection point to the facility. Indicate location or area designation for route of transmission or distribution lines; locations of duct banks, manholes/ handholes or poles; isolation units such as valves and switches; and utility facilities such as pump stations, lift stations, and substations.

b. Enlarged Connection and Cutoff Plans - Provide enlarged floor plans that provide information between the five foot utility connection point and where utilities connect to facility distribution. Enlarge floor plans/ elevations of the rooms where the utility enters the building and indicate on these plans locations of the main interior and exterior connection and cutoff points for the utilities. Also enlarge floor plans / elevations of the rooms where equipment is located. Include enough information to enable someone unfamiliar with the facility to locate the connection and cutoff points. Indicate designations such as room number, panel number, circuit breaker, or valve number, of each utility and equipment connection and cutoff point, and what that connection and cutoff point controls.

2.2.2 Facility Information

Provide the following in Facility Information:

2.2.2.1 General Facility and System Description

Describe the function of the facility. Detail the overall dimensions of the facility, number of floors, foundation type, expected number of occupants, and facility Category Code. List and generally describe all the facility systems and any special building features (for example, HVAC Controls, Sprinkler Systems, Cranes, Elevators, and Generators). Include photographs marked up and labeled to show key operating components and the overall facility appearance.

2.2.2.2 Floor Plans

Provide uncluttered, legible 11 by 17 inches floor plans. Include room numbers, type or function of spaces, and overall facility dimensions on the floor plans. Do not include items such as construction instructions, references, or frame numbers.

2.2.2.3 Floor Coverings, Wall Surfaces, and Ceiling Surfaces

Provide a table that lists by room number (including hallways and common spaces), the type, and area of finish, manufacturer's product name, identifying number, and color. Include a facility summary of the total area for each type of space and floor, wall, or ceiling finish in the table.

2.2.2.4 Windows

Provide a table that lists by room number (including hallways and common spaces), the type of window, window size, number of each size and type, special features, manufacturer's product name, identifying number, and color. The table must include a facility summary of the total number for each type and size of window.

2.2.2.5 Roofing

Provide the total area of each type of roof surface and system. Provide the name of the roofing product and system; manufacturer's, supplier's, and installer's names, addresses, and phone numbers; manufacturer's product name, identifying number, and color. For each type of roof, provide a recommended inspection, maintenance and repair schedule that details checkpoints, frequencies, and prohibited practices. List roof structural load limits.

2.2.2.6 HVAC Filters

Provide a table that lists the quantity, type, size, and location of each HVAC filter, manufacturer's product name, and identifying number.

2.2.2.7 Plumbing Fixtures

Provide a table that lists by room number, the number and type of plumbing and bathroom plumbing fixtures (for example, sinks, water closets, urinals, showers and drinking fountains).

2.2.2.8 Lighting Fixtures

Provide a table that lists by room number (including hallways and common spaces), the type of lighting fixture, ballast, number of lighting fixtures, type of lamps and number of lamps, and the manufacturer's product name and the identifying number. The table must include a facility summary of the total number of fixtures of each type and number of lamps of each type.

2.2.2.9 Equipment Listing

Provide a table that lists the major equipment shown on the design equipment schedules. Show the item descriptions, locations, model numbers; and the names, addresses, and telephone numbers of the manufacturers, suppliers, contractors, and subcontractors.

2.2.2.10 System Flow Diagrams

Provide a flow diagram indicating system liquid, air or gas flow during normal operations. Integrate the system components into the diagram. A compilation of non-integrated, flow diagrams for the individual system components are not acceptable.

2.2.2.11 Valve List

Provide a list of all valves associated with the system. Show valve type, identification number, function, location and normal operating position.

2.2.2.12 Riser Diagrams

Provide riser diagrams and settings of equipment.

PART 3 EXECUTION

3.1 eOMSI TRAINING

Provide training on eOMSI Manuals in accordance with Section 01 78 23 OPERATION AND MAINTENANCE DATA.

-- End of Section --

SECTION 01 78 30.00 22

GIS DATA DELIVERABLES

11/18

PART 1 GENERAL

1.1 OBJECTIVE

The primary objective of this section is to provide detailed specifications for collection and delivery of geospatial data commonly referred to as Geographic Information System (GIS) data. Additionally, this section shall provide guidance to ensure that all GIS data delivered is compatible and will add value to the Marine Corps Base (MCB) Camp Lejeune Installation Geospatial Information and Services (IGI&S) GEOdatabase.

Failure to comply with the specifications outlined in this document will result in non-acceptance of data deliverables.

1.1.1 Point of Contact for MCB Camp Lejeune

The Points of Contact (POC) for assistance in preparation of GIS deliverables are:

Resident Officer In Charge Of Construction
Construction Manager (CM)
1005 Michael Drive
Camp Lejeune, NC 28547-2521
(910) 451-2581

Public Works Division
GIS Data Manager
1005 Michael Road
Camp Lejeune, NC 28547-2521
(910) 451-5507 ext 3264

1.2 SUBMITTALS

Government approval is required for submittals with a "G" designation; submittals not having a "G" designation are for Contractor Quality Control approval. Submit the following in accordance with Section 01 33 00 SUBMITTAL PROCEDURES:

SD-11 Closeout Submittals

GIS Data Deliverables; G

1.3 GOVERNMENT GEOSPATIAL DATA AND SCHEMA

1. The IGI&S repository model schema is based on the Spatial Data Standards for Facilities, Infrastructure and Environment (SDSFIE) GEOFidelis Data Model with recurring business driven modifications and or adaptations.

   a. Data will be created and delivered by developing an ARCGIS Personal GEODatabase using ArcGIS 10.1 or higher if a higher version is being utilized by the Government at the time the deliverable is being developed.

   b. Request the existing GIS Data, Schema and Domain Properties by means of a Data Request Package (DRP). Receipt of request will include Geospatial Database table structure, schema, Domain

configuration, Attribute text format, i.e., case size as well as Meta Data information.

c. The DRP should be submitted prior to the start of data collection efforts and again every 6 months for the duration of the contract. Ensure that all GIS data has been created and delivered utilizing the most up to date IGI&S GEODatabase schema.

d. Verify the ArcGIS and schema version, via the CM or PM, at the commencement of this contract. All GIS DATA DELIVERABLES will be created in accordance with the current version and these specifications.

2. Submit a request for a Geospatial DRP to the CM or the Project Manager.

a. Request to be completely filled out and include all the information as instructed on the data request form.

b. Request only GIS data and or schema for feature classes that are relevant to the contract and within the boundary of project area.

c. Attach Scope of Work, which is defined by this GIS DATA DELIVERABLES section for each project request.

d. Return the DRP to the CM or Project Manager for sponsorship and submittal to the Installation Geospatial Information & Services (IGI&S) Office.

e. Incomplete forms may delay receipt of the requested GIS data and Schema.

1.3.1 Global Positioning System (GPS) and Spatial Reference Properties

GPS data shall be completed in accordance with the GPS Data Collection and Documentation Standards, Version 4 (or higher version if available at the time of this project) as prepared by Geographic Information Coordinating Council (GICC) Statewide Mapping Advisory Committee (SMAC) and adopted by the North Carolina Geographic Information Coordinating Council.

1. Prior to GPS efforts, ALL underground utilities are to be located utilizing a utility locating service in order to verify and obtain accurate feature locations.

2. Only bench marks included in the North Carolina Geodetic Survey Base Station Network are to be used for GPS data collection.

3. Mission planning is essential. Utilize the best Position Dilution of Precision (PDOP) values for data accuracy.

4. Utility data, as identified in paragraph "ATTRIBUTE DATA COLLECTION AND GPS REQUIREMENTS FOR SPECIFIC FEATURES" will be collected utilizing Survey Grade GPS data collection methods.

5. Infrastructure data, as identified in paragraph "ATTRIBUTE DATA COLLECTION AND GPS REQUIREMENTS FOR SPECIFIC FEATURES" will be collected utilizing Sub-Foot or better GPS data collection methods.

a. Spatial accuracy requirements for Survey and Sub-Foot grade data collection are as follows:

i. Sub-Foot requirements:

1) All points shall be within + 12 inches

2) 95 percent accuracy rate for all points.

ii. Survey Grade requirements:

1) All points shall be within + 1 centimeter

2) 98 percent accuracy rate for all points

6. Make every effort to capture feature locations without using offsets. All Offsets will be noted in the Final Report for each feature.

7. Excessive offsets included in the Final Data, which will be referenced in the Final Report, will be reviewed for quality control.

   a. Resubmittal of data will be required if PDOP planning was not observed per this specification.

The following GEODatabase Coordinate Systems and Spatial Reference Properties should be utilized for Camp Lejeune:

1. Transverse Mercator (UTM) Zone 18N

   a. GRS 1980 spheroid

   b. North American Datum 1983 (NAD83) horizontal datum

   c. North American Vertical Datum 1988 (NAVD88) vertical datum.

2. Domain precision of 1000 which will result in a database accuracy of 1/1000 m

1.3.2 Demolished and Abandoned in Place (AIP) Features

Reference all Demolished and or AIP features in the data delivered. Should the current feature data class attributes and or domains not reference AIP or demolished features, the Contractor will be responsible for appropriately delivering these features by creating an associated "Demolished" or AIP feature class for all point and polyline data, i.e., CLJN.CL.WastewaterUtilitySegment and CLJN.CL.WateUtilNode_wHydrant, etc.

1. Utilize a blank schema for the associated feature class.

2. Rename associated feature class and add DEMO or AIP as a prefix, i.e., DEMO.CLJN.CL.WastewaterUtilitySegment, AIP.CLJN.CL.WastewaterUtilitySegment.

3. All demolished and or AIP features should provide existing spatial and non-spatial data which may be copied from existing data.

4. Update attributes appropriately to include the following:

   a. Contract Number.

   b. Drawing Number.

c. isDemolished.

d. dateDemolished or dateAIP.

e. Status.

1.3.3 Creating a New Feature Class

Should a new feature class be required that is not readily available in the current GIS schema provided by the Government. Contact the CM or Project Manager for guidence and schema format.

1.3.4 GIS Topology Rules

All data must be created using GIS topology rules for polygons, points and lines, such as, but not limited to the following examples:

1. Polygons, Polylines and points rules; please reference illustrating topology rules in ArcGIS at www.esri.com.

2. Polygons must not have slivers.

3. All utility or infrastructure system data, which is, but is not limited to, transportation system and electrical, water, steam distribution, and wastewater collection, etc., will be created using GIS spatial connectivity rules which specify that vertex, edge and endpoints be snapped to features within the system.

4. Features will be snapped to the appropriate item.

5. Data will be created to represent the real world, for example, water, sewer, and transportations systems, etc. will be drawn and or created in the direction of flow.

6. Utility and transportation systems will be created from source to sink, etc.

7. Abandoned In Place (AIP) utility lines will be located and updated in the current feature data set and identified as AIP in the attribute tableor provide in a feature data set as specified in paragraph "Demolished and Abandoned in Place (AIP) Features" with CM approval.

1.3.5 Creation of Geographic Data Documentation (METADATA)

For each digital file delivered containing geographic information, provide documentation consistent with the Federal Geographic Data Committee (FGDC) Content Standards for Digital Geospatial Metadata (CSDGM).

Metadata generation tools included in the ArcGIS suite of software (or equivalent technology) will be used in the production of the required metadata in XML format. Regardless of the tools used for metadata creation, must ensure that the metadata is delivered in XML format and can be easily imported into the IGI&S GEODatabase.

(NOTE: The metadata should be formatted from the Government perspective, not the Contractor project perspective. Therefore such items as Point of Contact (POC) should be the POC currently associated with the data and NOT the Contractor's Project Manager. Use language and format consistent with

existing metadata.)

1.3.6 GIS Submittals Guidelines

All GIS Submittals will be submitted to the CM or PM and then analyzed by Government GIS personnel prior to final approval. Failure to comply with the specifications outlined in this document will result in non-acceptance of data deliverables.

1. Prior to any database development, provide the Government with a technical approach document, in PDF format, for review and approval. The Technical Approach document will describe in detail the Contractor's technical approach to designing and developing the database.

2. All attributes will be populated in accordance with the "ATTRIBUTE DATA COLLECTION AND GPS REQUIREMENTS FOR SPECIFIC FEATURES" and will be obtained via contract specifications, plans and record drawings.

3. Reasearch may be required to be conducted to collect data and make copies of reports and studies as necessary to verify existing and/or record drawing data. Record drawing data and closed contracts can be located in the Technical Records Section in the Public Works Department which is located at 1005 Michael Street, MCB Camp Lejeune.

4. Raw GPS data and collection data files will be included with every phase of delivery.

5. Actual spatial and non-spatial conditions in the field always supersede drawings. Locate and field verify all features to ensure attribute data and location is correctly recorded.

6. Submit a preliminary review of data at 25 percent contract completion to ensure specifications compliance.

7. Deliver digital geographic maps, GPS collection files and related data. All working text and documents and personal geodatabase will be included for review in the draft and final delivery of data.

   a. All maps of GIS DATA DELIVERABLES will be ANSI C size and include a project title, contract number, scale, legend, standard symbology, attributes, i.e., building numbers, road names, segment diameters, etc. Also provide a PDF copy of all maps.

8. When required, provide a technical consultant to meet on site.

9. Do not deliver blank unused schema or feature class data with no attributes. Deliver only data pertinent to the contract that adds value to the GEODatabase per this section.

10. When projects are constructed in phases, deliver GIS Data at the end of each phase for all Phased Projects and Construction projects.

11. It is the Contractor's responsibility to perform quality assurance for all data and related materials required in the section prior to submitting product to the Government.

12. The data will be analyzed for discrepancies in subject content, correct format in accordance with this statement of work, and

compatibility with the existing GIS system as well as all other specifications in this section.

1.3.7 Formats, Versions and Guidelines

All data deliverables will be in the following formats and/or versions.

1. GIS data will be provided in an ArcGIS 10.1 or higher if a higher version is being used by the Government at the time of this project. Verify the ArcGIS version, via the CM or PM at the commencement of this contract.

2. Microsoft Windows 7 operating system, unless otherwise approved by the Government.

3. All reports and maps will be delivered as a hard copy and in a searchable Adobe Portable Document Format (PDF).

4. All text, spreadsheet, database files, reports, and maps will be delivered on Digital Versatile Disc read - only memory (DVD-ROM).

5. Verify required version(s) of software and schema, via the CM or PM.

6. Map submittals will accompany each geospatial deliverable.

    a. Include ANSI C map for each project/area.

    b. Data should be labeled and attributed per specification.

    c. All maps should include the date, a legend, scale, contract title, and number.

    d. Each map should be exported on a .pdf and delivered electronically with the project.

1.3.8 Final Report Requirements with additional Guidelines

Follow the following:

1. Specific procedures and list of equipment, software and versions that were utilized for the GPS data collection and creation of geospatial data.

2. Submit all GPS data files.

3. Provide the date(s) the IGI&S schema and geospatial data was received.

4. Provide details on any offsets to include justification as to why offsets were utilized and on which features and or points offsets were used.

5. Describe all modifications to the geodatabase to include the name of all new features classes, i.e., new, demolished or AIP.

6. Provide the source that was utilized for required attributes.

    a. Include an ANSI C size copy of all design drawings that were referenced in the attribute data. This information should be included in all phases of delivery to include draft and final

reviews.

b. Provide the overall utility site plan drawing(s)with each submittal.

c. Provide a separate map for communication which includes infrastructure in PDF format.

7. Specify Deliverable "Draft #" or "Final Submittal" when data is submitted to the CM or PM for review.

8. Provide the name and contact information for the GIS Technical Point of Contact who can answer questions regarding the data deliverable.

9. GIS DATA DELIVERABLES must be provided in a format that does not require translation or pre/post processing prior to being loaded into the IGI&S GEODatabase.

10. Provide any miscellaneous information that is deemed significant.

11. Provide the current version of the GIS DATA DELIVERABLES specification utilized for this contract submittal.

1.3.9 Ownership

All digital files, final hardcopy products, GPS raw data, source data acquired for this project, and related materials, including that furnished by the Government, will become the property of the Government and will not be issued, posted, distributed, or published by the Contractor. All documentation will be delivered in the final delivery.

Note: No endorsement of software or hardware is implied.

1.4 ATTRIBUTE DATA COLLECTION AND GPS REQUIREMENTS FOR SPECIFIC FEATURES

GPS and collect attribute data as specified for each feature listed with (GPS) accuracy as described in paragraph "Global Positioning System (GPS) and Spatial Reference Properties". Attribute fields may be associated with Domains, which are utilized to constrain the values allowed in a particular field, attribute table or feature class. Domains must be utilized when populating the feature where required.

1.4.1 **CLJN.CL.Common**

GPS and collect attribute data as specified for each feature listed with GPS accuracy as described in paragraph "Global Positioning System (GPS) and Spatial Reference Properties." Attribute fields may be associated with Domains, which are utilized to constrain the values allowed in a particular field, attribute table, or feature class. Domains must be utilized when populating the feature where required.

GPS and collect the following attributes:

CLJN.CL.Sign
A structure that conveys directional, warning, or other information.

a) numberOfSigns
b) assemblyOffset
c) SignText

d) SignType - Directional, Standard Identifier, Safety Warnings, Regulatory, etc.
e) SymbolCode - Utilize manual for Uniform Traffic Control Devices Code as issued by the Federal Highway Administration
f) GisFeatureCollectionMethod - Survey Grade GPS, Digitized, etc.
g) Contract Number
h) SdsFeatureDescription
i) signAssemblyType - Pedestal Pole, Wood 4x4, etc.

1.4.2 CLJN.CL.EMERGENCY_SERVICES

GPS and collect attribute data as specified for each feature listed with GPS accuracy as described in paragraph "Global Positioning System (GPS) and Spatial Reference Properties". Attribute fields may be associated with Domains, which are utilized to constrain the values allowed in a particular field, attribute table, or feature class. Domains must be utilized when populating the feature where required.

CLJN.CL.RoadCenterline
The center of the road area

a) roadClass - Major Roads/Local Roads/etc.
b) trackOrLaneCount
c) speedLimit
d) isPaved - YES / NO
e) oneWayDirection
f) fullStreetName
g) mediaID - GIS Collection Method - CAD, Survey Grade GPS, etc.
h) contractNumber
i) isTankTrail - YES / NO
j) isLighted - Yes / No
k) routeMinTravelledWayWidth
l) routeMinTravelledWayWidthUOM
m) routeTotalUsableWidth
n) routeTotalUsableWidthUOM
o) supportedByBridgeSpan - Yes / No

1.4.3 CLJN.CL.REAL.PROPERTY

GPS and collect attribute data as specified for each feature listed with GPS accuracy as described in paragraph "Global Positioning System (GPS) and Spatial Reference Properties." Attribute fields may be associated with Domains, which are utilized to constrain the values allowed in a particular field, attribute table or feature class. Domains must be utilized when populating the feature where required.

GPS and collect the following attributes:

CLJN.CL.AccessControl
A structure manned or unmanned intended to control access to an area

a) controlType - gate, barricade, tire shedder, etc.
b) contractNumber
c) mediaID - GIS Collection Method - CAD, Survey Grade GPS, etc.

d) isRangeAccess - YES / NO
e) gateType -
f) Facility Number
g) sdsFeatureDescription - Location

CLJN.CL.AlternativeEnergyPoint
Locations used for the production of alternative energy sources, such as wind turbines, photovoltaic, etc.

a) alternativeEnergyType - Photovoltaic, Natural Gas, etc.
b) contractNumber
c) designDrawingNumber
d) gisFeatureCollectionMethod - CAD, Survey Grade GPS, etc.
e) isPortable - YES / NO
f) wattage
g) operationalStatus - inservice, abandoned, etc.
h) panelType
i) sdsFeatureName
j) sdsFeatureDescription
k) wattage - Total per unit
l) hasInverter - YES / NO
m) isPartOfElectricalNetwork - YES / NO
n) photovoltaicPanelInstallation

CLJN.CL.AlternativeEnergyArea
Locations used for the production of alternative energy sources

a) operationalStatus - inservice, abandoned, etc.
b) isPortable - YES / NO
c) panelType
d) wattage - total for area
e) gisFeatureCollectionMethod - CAD, Survey Grade GPS, etc.
f) contractNumber
g) sdsFeatureName - Facility Number
h) hasInverter - YES / NO
i) isPartOfElectricalNetwork - YES / NO

CLJN.CL.BoatRamp
A partially submerged hard surfaced structure on a shoreline for launching or retrieving vessels or vehicles

a) boatRampIDPK - Facility Number
b) dateConstructed
c) gisFeatureCollectionMethod - CAD, Survey Grade GPS, etc.
d) contractNumber
e) sdsFeatureName
f) sdsFeatureDescription - Location
g) numberofLaunchLanes

CLJN.CL.Bridge
A structure used by vehicles that allows passage over or under an obstacle such as a river, chasm, mountain, road or railroad

a) isFixed - YES / NO
b) TransportationSystemType - Pedestrian, Road, Railway, etc.

c) FacilityNumber
d) verticalConstructionMaterial - Brick, Concrete, etc.
e) mediaID - GIS Collection Method - CAD, Survey Grade GPS, etc.
f) contractNumber
g) sdsFeatureDescription - Road Name if applicable
h) OperationalStatus - closed, operational, etc.

CLJN.CL.Building
A roofed, floored and walled structure that is completely enclosed

a) facilityNumber
b) builtDate
c) mediaID - GIS Collection Method - CAD, Survey Grade GPS, etc.
d) contractNumber
e) sdsFeatureDescription - General Description of Building's Purpose
f) floorCount
g) material - Exterior material such as Brick, Concrete, etc.
h) operationalStatus - inService, abandoned, etc.

CLJN.CL.BuildingFloorPlan
A linear representation of floor plans for buildings, provided in one feature per floor

a) buildingFloorLevel
b) buildingIDFK - Structure Number
c) gisFeatureCollectionMethod - CAD, Survey Grade GPS, etc.
d) contractNumber
e) sdsFeatureDescription Renovation Date

CLJN.CL.Disposal_RealProperty
Real property demolished structures

a) sdsFeatureDescription
b) sdsFeatureName
c) facilityNumber
d) contractNumber
e) disposalDate

CLJN.CL.DocksAndWharfs
A manmade water-land interface structure often for access to boats or ships

a) PurposeType - Fishing, Mooring, etc.
b) mediaID - GIS Collection Method - CAD, Survey Grade GPS, etc.
c) contractNumber
d) Facility Number - Structure Number
e) sdsFeatureDescription - Pier, boat ramp, dock, etc.
f) natureOfConstruction - concrete, earthen, steel

CLJN.CL.Fence
A freestanding structure designed to restrict or prevent movement across a boundary

a) facilityIDFK - Structure Number
b) fenceType - metal, wood, etc.
c) fenceUse - agriculture, boundary, etc.
d) mediaID - GIS Collection Method - CAD, Survey Grade GPS, etc.
e) contractNumber
f) sdsFeatureName - Fence or Gate
g) sdsFeatureDescription

CLJN.CL.Marina
Any facility or area for the exchange of people or materials from land to water such as a port, harbor, marina, launch area or small craft facility

a) marinaIDPK - Structure Number
b) marinaType
c) gisFeatureCollectionMethod - CAD, Survey Grade GPS, etc.
d) contractNumber
e) sdsFeatureName
f) createdDate - Construction Date
g) categoryOfCraftFacility - boat launch or landed, etc.

CLJN.CL.NavigationalAid
A visual or electronic device, on the ground or airborne, which provides point-to-point guidance information or position data to aircraft in flight

a) navigationalAidIDPK - Structure Number
b) navaidType - TACAN, Radar station, Beacon, etc.
c) gisFeatureCollectionMethod - CAD, Survey Grade GPS, etc.
d) contractNumber
e) sdsFeatureName - Type of navigational aid

CLJN.CL.PavementSectionAirfield
A pavement section is a portion of a pavement branch that differs in some aspect from other sections such that further segmentation is required to uniquely identify that section)

a) pavementSectionType - apron, roadway, etc.
b) isLighted - YES / NO
c) operationalStatus - inService, abandoned, etc.
d) mediaID - GIS Collection Method - CAD, Survey Grade GPS, etc.
e) builtDate
f) contractNumber
g) runwayClassification - class A, class B, rotatory, etc.
h) sdsFeatureName
i) sdsFeatureDescription - MCBCL, MCASNR, Geiger, Stone Bay, etc.

CLJN.CL.PavementSectionParkingArea
A vehicle parking area is an area used for parking vehicles not including residential streets and driveways.

a) mediaID - GIS Collection Method - CAD, Survey Grade GPS, etc.
b) operationalStatus - inService, abandoned, etc.

c) pavementSectionType - parking, slab, driveway, etc.
d) sdsFeatureDescription - Dumpster, Driveway, Transformer, Parking, etc.
e) sdsFeatureName - Pad, Slab, Parking, etc.
f) facilityNumber
g) builtDate
h) contractNumber
i) isLighted

CLJN.CL.PavementSectionRoadway
The surface area that comprise a road area, upon which vehicles drive and park.

a) mediaID - GIS Collection Method - CAD, Survey Grade GPS, etc.
b) operationalStatus - inService, abandoned, etc.
c) pavementSectionType - curb, roadway, etc.
d) facCode - Surfaced or Unsurfaced
e) divided - Yes / No
f) featureCode
g) oneWay - Yes / No
h) routeSurfaceComposition - concrete, asphalt, etc.
i) builtDate
j) contractNumber
k) isLighted - Yes / No
l) isTankTrail - Yes / No

CLJN.CL.PavementSectionSidewalk
The paved pedestrian walkway prepared to facilitate travel on foot. It may or may not be adjacent to a street/road.

a) mediaID - GIS Collection Method - CAD, Survey Grade GPS, etc.
b) operationalStatus - inService, abandoned, etc.
c) pavementSectionType - Sidewalks
d) sdsFeatureDescription - Named Area
e) routeSurfaceComposition - Concrete, Asphalt, etc.
f) builtDate
g) contractNumber
h) installationCode - M67001
i) isLighted - Yes / No

CLJN.CL.RailTrack
A track is the main designation for describing a physical linear portion of the network

a) contractNumber
b) facilityNumber
c) mediaID - GIS Collection Method - CAD, Survey Grade GPS, etc.
d) NetworkSubtype - railroadTrack, craneTrack
e) operationalStatus - inservice, abandoned, etc.
f) sdsFeatureName - Start & finish Points
g) sdsFeatureDescription - Provide Street Name Cross cover

CLJN.CL.RecreationArea

An area defined for recreational purposes

a) facilityNumber
b) mediaID - GIS Collection Method - CAD, Survey Grade GPS, etc.
c) contractNumber
d) sdsFeatureName - Type of recreation field
e) sdsFeatureDescription - Type of recreation feature
f) areaType - biking, boating, picnic, Hunting, etc.

CLJN.CL.RecreationTrail
A location providing physical activities which are mentally relaxing, such as running/walking, biking, or hiking

a) recreationTrailIDPK - Facility or Structure Number
b) trailType - Multi-use, horse riding, etc.
c) isPaved - YES / NO
d) dateConstructed
e) gisFeatureCollectionMethod - CAD, Survey Grade GPS, etc.
f) contractNumber
g) sdsFeatureName - Trail Name
h) sdsFeatureDescription - Area, Location or parallel street

CLJN.CL.StructureArea
A facility classified as other than a building or linear asset

a) facilityNumber - Structure Number
b) builtDate
c) mediaID - GIS Collection Method - CAD, Survey Grade GPS, etc.
d) contractNumber
e) sdsFeatureName - Name of structure according to contract
f) sdsFeatureDescription - Description of item
g) heightAboveSurfaceLevel
h) heightAboveSurfaceLevelUOM - foot, inch, meter, etc.

CLJN.CL.StructurePoint
Example: Flag poles; Point of Information Signs (POI) etc

a) facilityNumber - Structure Number
b) builtDate
c) mediaID - GIS Collection Method - CAD, Survey Grade GPS, etc.
d) contractNumber
e) sdsFeatureName - POI, Sign, Flagpole, bleacher, etc.
f) sdsFeatureDescription - Specific type of feature

CLJN.CL.Tower
A vertical projection, higher than its diameter, generally used for observation, storage, or electronic transmission

a) towerUseType - communication, observation, etc.
b) heightMax
c) heightUOM - foot, inch, meter, etc.
d) contractNumber
e) towerType - Observation Tower, Guard Tower, etc.

f) facilityNumber - Structure number
g) sdsFeatureDescription
h) mediaID - GIS Collection Method - CAD, Survey Grade GPS, etc.
i) towerMaterial - wood, concrete, steel, etc.

CLJN.CL.TrafficControlLight
A feature used to represent traffic lights

a) contractNumber
b) gisFeatureCollectionMethod - CAD, Survey Grade GPS, etc.
c) sdsFeatureName - Traffic Control Light, Traffic Signal control box, etc.
d) sdsFeatureDescription - Location such as streets that intersect

CLJN.CL.Wall
A linear feature used for separation of facilities, ornamental decoration, or structural reinforcement (retaining wall

a) wallType - brick, timber, stone, concrete, etc.
b) wallHeight
c) wallHeightUOM - foot, inch, meter, etc.
d) dateConstructed
e) gisFeatureCollectionMethod - CAD, Survey Grade GPS, etc.
f) contractNumber
g) sdsFeatureName
h) sdsFeatureDescription - Dumpster enclosure, Utility Enclosure, Blast Protection, etc.

1.4.4 CLJN.CL.REAL_PROPERTY_RESTRICTED

GPS and collect attribute data as specified for each feature listed with GPS accuracy as described in paragraph "Global Positioning System (GPS) and Spatial Reference Properties." Attribute fields may be associated with Domains, which are utilized to constrain the values allowed in a particular field, attribute table or feature class. Domains must be utilized when populating the feature where required.

GPS and collect the following attributes:

CLJN.CL.Well
A shaft dug or drilled into the Earth for the purpose of extracting fluids from the subsurface, collecting environmental samples, injecting fluids into the subsurface or extracting contamination or other impurities from the subsurface

a) facilityNumber - Structure Number
b) wellPurpose - extraction, injection, etc.
c) wellResource - WATER
d) operationalStatus - inservice, abandoned, etc.
e) mediaID - GIS Collection Method - CAD, Survey Grade GPS, etc.
f) contractNumber
g) sdsFeatureName - potable or nonpotable
h) sdsFeatureDescription - operational status source

i) ProjectID - Name of Plant this well services
j) wellType - artesian, drilled, etc.
k) operationalStatus - inservice, abandoned, removed, etc

1.4.5 CLJN.CL.COMMUNICATIONS_RESTRICTED

GPS and collect attribute data as specified for each feature listed with GPS accuracy as described in paragraph "Global Positioning System GPS and Spatial Reference Properties." Attribute fields may be associated with Domains, which are utilized to constrain the values allowed in a particular field, attribute table or feature class. Domains must be utilized when populating the feature where required.

GPS and collect the following attributes:

CLJN.CL.CommCartographicFeatureArea
Graphic features that aid in visually associating CommAnnotation features to the appropriate communication infrastructure feature.

a) gisFeatureCollectionMethod - CAD, Survey Grade GPS, etc.
b) sdsFeatureName
c) sdsFeatureDescription
d) commProjectName - Contract Number
e) operationalStatus - In service, Removed, Abandon in Place, etc.

CLJN.CL.CommCartographicFeatureLine
Graphic features that aid in visually associating CommAnnotation features to the appropriate communication infrastructure feature.

a) gisFeatureCollectionMethod - CAD, Survey Grade GPS, etc.
b) sdsFeatureName
c) sdsFeatureDescription
d) commProjectName - Contract Number
e) operationalStatus - In service, Removed, Abandon in Place, etc.

CLJN.CL.CommCartographicFeaturePoint
Graphic features that aid in visually associating CommAnnotation features to the appropriate communication infrastructure feature.

a) gisFeatureCollectionMethod - CAD, Survey Grade GPS, etc.
b) sdsFeatureName
c) sdsFeatureDescription
d) commProjectName - Contract Number
e) operationalStatus - In service, Removed, Abandon in Place, etc.

CLJN.CL.CommUtilityNode
A subdivision of a communications network, particularly an asset that participates in the transmission of a signal but that is not a cable.

a) commUtilityNodeIDPK - Structure Number
b) commNodeType - connection or two or more sheaths, Devise Used to detect & measure various environmental conditions,

Devise converts electrical signal in to sound, etc.
c) operatingSpectrum
d) transmissionPower
e) powerUOM
f) operationalStatus - In service, Removed, Abandon in Place, etc.
g) commProjectName - Contract Number
h) gisFeatureCollectionMethod - CAD, Survey Grade GPS, etc.
i) sdsFeatureName - MNS - Big Voice, MNS - Little Voice, MSN - Control Station, etc.
j) sdsFeatureDescription - MNS - Big Voice, Field Antenna, Antenna Communication, etc.

CLJN.CL.CommUtilitySegment
A subdivision of a communications network, particularly a cable for the transmission of a signal.

a) cableMaterial - Fiber Optical, PB, CU, Steel, ABS, etc.
b) cableSheathing - PE, XLPE, Cross Ply, etc.
c) availableFibers -
d) usedFibers
e) numberOfMultiModeFibers
f) numberOfPairs
g) numberOfSingleModeFibers
h) installationTypeCode - Underground, above ground, etc.
i) operationalStatus - In service, Removed, Abandon in Place, etc.
j) cableInstaller -
k) cableRoute -
l) cableCount -
m) numberOfStrands -
n) wireGauge -
o) commProjectName - Contract Number
p) gisFeatureCollectionMethod - CAD, Survey Grade GPS, etc.
q) sdsFeatureName - Non-direct Buried Lines, Direct Buried Lines, etc.
r) sdsFeatureDescription - communications line, etc.

CLJN.CL.UtilityFeature_cDuctBank
One or more ducts routed in parallel between two nodes.

a) networkType - A network used for the transmission of a signal.
b) networkSubType - The communication network subtype.
c) utilityFeatureType - One or more ducts routed in parallel between two nodes. (L), etc.
d) diameter
e) diameterUOM - Inches, Feet, meters, etc.
f) ductDepth
g) ductDepthUOM - Inches, Feet, meters, etc.
h) interDuctDiameter
i) interDuctDiameterUOM - Inches, Feet, meters, etc.
j) isEncased - Yes or No
k) numberOfDucts
l) numberOfInserts
m) operationalStatus - In service, Removed, Abandon in Place, etc.

n) commProjectName - Contract Number
o) gisFeatureCollectionMethod - CAD, Survey Grade GPS, etc.

CLJN.CL.UtilityFeature_cManhole
An enclosed structure (manhole, or handhole)

a) utilityFeatureIDPK - MH Number - See project Manager
b) networkType - Network used for transmission of signal,
c) networkSubType - Communication network subtype
d) utilityFeatureType - Manhole, hand hole, etc.
e) cManholeType - T, R2A, L, j4, JC9C, etc.
f) cManholeMaterial - steel, plastic, aluminum, fiberglass, etc.
g) isHandhole - Yes or No
h) widthValue
i) widthUOM - Inches, Feet, meters, etc.
j) lengthValue
k) lengthUOM - Inches, Feet, meters, etc.
l) heightValue
m) heightUOM - Inches, Feet, meters, etc.
n) diameter
o) diameterUOM - Inches, Feet, meters, etc.
p) cManholeDepth
q) cManholeDepthUOM - Inches, Feet, meters, etc.
r) operationalStatus - In service, Removed, Abandon in Place, etc.
s) commProjectName - Contract Number
t) gisFeatureCollectionMethod - CAD, Survey Grade GPS, etc.

CLJN.CL.UtilityFeature_cPedestal
An above-ground enclosed structure that provides access to buried plant and a place to house splices, terminals, etc.

a) networkType - A network used for the transmission of a signal.
b) networkSubType - The communication network subtype.
c) utilityFeatureType - above-ground enclosed structure that provides access to buried plant and a place to house splices, terminal, etc.
d) pedestalType - rectangular box type, etc.
e) operationalStatus - In service, Removed, Abandon in Place, etc.
f) commProjectName - Add Contract Number
g) gisFeatureCollectionMethod - CAD, Survey Grade GPS, etc.
h) sdsFeatureDescription

CLJN.CL.UtilityFeature_cVault
An enclosed structure in a facility used for cable entrance.

a) utilityFeatureType
b) networkType - A network used for the transmission of a signal.
c) networkSubType - The communication network subtype.
d) heightValue
e) heightUOM - Inches, Feet, meters, etc.
f) widthValue
g) widthUOM - Inches, Feet, meters, etc.

h) vaultDepth
i) vaultDepthUOM - Inches, Feet, meters, etc.
j) diameter
k) diameterUOM - Inches, Feet, meters, etc.
l) operationalStatus - In service, Removed, Abandon in Place, etc.
m) commProjectName - Contract Number
n) gisFeatureCollectionMethod - CAD, Survey Grade GPS, etc.
o) sdsFeatureDescription

1.4.6 CLJN.CL.UTILITIES_ELECTRICAL

GPS and collect attribute data as specified for each feature listed with GPS accuracy as described in paragraph "Global Positioning System (GPS) and Spatial Reference Properties." Attribute fields may be associated with Domains, which are utilized to constrain the values allowed in a particular field, attribute table or feature class. Domains must be utilized when populating the feature where required.

GPS and collect the following attributes:

CLJN.CL.ElecUtilNode_eExteriorLight
Exterior lighting is supplied by local distribution systems and is generally the only service for which the electric utility installs, operates and maintains utilization equipment

a) electricalUtilityNodeIDPK
b) exteriorLightType - streetLight, parkingLotLight, etc.
c) electricalNodeType - eExteriorLight
d) operationalStatus - inservice, abandoned, etc.
e) bulbType LED, INCA, etc.
f) circuitID - This available from CM or PM
g) hasSensor - YES / NO
h) mediaID - GIS Collection Method - CAD, Survey Grade GPS, etc.
i) contractNumber
j) dateInService
k) sdsFeatureName
l) Voltage
m) Wattage

CLJN.CL.ElecUtilNode_eGenerator
Generator is a power source for providing electricity. Generators may be primary or standby power sources

a) FacilityNumber - structure number
b) electricalNodeType - eGenerator
c) operationalStatus - inservice, abandoned, etc.
d) voltage
e) kvaRate
f) circuitID - List is available from CM or PM
g) mediaID - GIS Collection Method - CAD, Survey Grade GPS, etc.
h) contractNumber
i) dateInService
j) sdsFeatureName - Manufacturer
k) generatorType - Primary, backup, emergency, etc.

CLJN.CL.ElecUtilNode_eMeterPoint
A electrical meter point represents the location of the metering device

a) electricalNodeType - Description
b) operationalStatus - inservice, abandoned, etc.
c) circuitID - List is available from CM or PM
d) mediaID - GIS Collection Method - CAD, Survey Grade GPS, etc.
e) contractNumber
f) dateInService
g) sdsFeatureName
h) sdsFeatureDescription -
i) mountingType
j) utilityOwner
k) voltage - 208Y-120V, 480Y-277V, etc.

CLJN.CL.ElecUtilNode_eSwitch
Electrical Switches are installed at strategic locations throughout distribution feeder circuits

a) electricalNodeType
b) switchPosition - closed, open, etc.
c) operationalStatus - inservice, abandoned, etc.
d) electricalSwitchType - switches
e) circuitID - List is available from CM or PM
f) numberOfPhases single, three, two
g) switchPosition - Open, closed, etc.
h) voltage - 208Y-120V, 480Y-277V, etc.
i) mediaID - GIS Collection Method - CAD, Survey Grade GPS, etc.
j) contractNumber

CLJN.CL.ElecUtilNode_eTransformer
The Transformer feature class captures information about distribution and power transformers

a) electricalNodeType - Transformer
b) transformerType - stepdown, step up, etc.
c) mountingType - pool or pad
d) numberOfPhases - 1, 2, 3, etc.
e) primaryVoltage - 208Y-120V, 480Y-277V, etc.
f) secondaryVoltage - 208Y-120V, 480Y-277V, etc.
g) totalKVA
h) circuitID - List is available from CM or PM
i) mediaID - GIS Collection Method - CAD, Survey Grade GPS, etc.
j) contractNumber
k) sdsFeatureName - Manufacturer
l) operationalStatus - inservice, abandoned, etc.

CLJN.CL.ElecUtilNode_eVoltageRegulator
Voltage regulators vary the ac supply or source voltage to the customer to maintain the voltage within desired limits

a) electricalNodeType - VoltageRegulator
b) operationalStatus - inservice, abandoned, etc.
c) primaryVoltage - 208Y-120V, 480Y-277V, etc.
d) secondaryVoltage - 208Y-120V, 480Y-277V, etc.

e) numberOfPhases - 1, 2, 3,
f) circuitID - This available from CM or PM
g) mediaID - GIS Collection Method - CAD, Survey Grade GPS, etc.
h) contractNumber

CLJN.CL.UtilFeat_eSupportStructure
A structure that supports electric devices

a) utilityFeatureType - Utility, Guy, Poles, etc.
b) networkType - electrical
c) heightValue -
d) heightUOM - foot, inch, meter, etc.
e) utilityOwner
f) operationalStatus - inservice, abandoned, etc.
g) cableCircuitName - List is available from CM or PM
h) gisFeatureCollectionMethod - CAD, Survey Grade GPS, etc.
i) contractNumber
j) sdsFeatureName - Utility Pole, etc
k) sdsFeatureDescription - Number of circuits attached to pole

CLJN.CL.UtilFeat_eUndergroundStructure
Underground Structure is a simple junction feature that includes vaults and manholes that house and protect electrical equipment

a) utilityFeatureIDPK - Structure Number
b) utilityFeatureType - Underground, surface structure, etc
c) networkType - electrical
d) operationalStatus - inservice, abandoned, etc.
e) electricalJunctionType - Manhole, Junction Box, Handhole, etc.
f) numberOfCables -
g) rimElevation -
h) rimElevationUOM - foot, inch, meter, etc.
i) cableCircuitName - List is available from CM or PM
j) gisFeatureCollectionMethod - CAD, Survey Grade GPS, etc.
k) contractNumber

CLJN.CL.ElecUtilSegment
A subdivision of an electrical distribution network, particularly a line for the transmission of electricity

a) electricalSegmentType - OH Primary, UG Primary, OH Secondary, UG Secondary, etc.
b) cableMaterial - AL, copper, etc.
c) location - aboveground, underground, etc.
e) voltage - 208Y-120V, 480Y-277V, etc.
f) utilityOwner -
g) operationalStatus - inservice, abandoned, etc.
h) insulationMaterial - polyCross, none, etc.
i) conductorSize -
j) neutralSize -
k) numberOfConduct -
l) numberOfNeutral -
m) numberOfPhases - 1, 2, 3, etc.
n) circuitID - List is available from CM or PM
o) mediaID - GIS Collection Method - CAD, Survey Grade GPS, etc.

p) contractNumber -
q) dateInService -
r) sdsFeatureName - Electrical Distribution, exterior lighting, etc.
s) sdsFeatureDescription - Armless mount, cross arm, etc.

CLJN.CL.UtilFeat_eElecFacilitySite
Polygon feature class to define boundaries of electrical facility stations

a) utilityFeatureType - Electrical Facility station
b) operationalStatus - inservice, abandoned, etc.
c) numberOfCircuits
d) numberOfSpareBays
e) numberOfTransformers
f) voltageIn - 208Y-120V, 480Y-277V, etc.
g) utilityOwner
h) gisFeatureCollectionMethod - - CAD, Survey Grade GPS, etc.
i) contractNumber
j) equipmentInstallationDate
k) sdsFeatureDescription - Location of substation
l) facilityIDFK - structure number

1.4.7 CLJN.CL.UTILITIES_POL

GPS and collect attribute data as specified for each feature listed with GPS accuracy as described in paragraph "Global Positioning System GPS and Spatial Reference Properties." Attribute fields may be associated with Domains, which are utilized to constrain the values allowed in a particular field, attribute table or feature class. Domains must be utilized when populating the feature where required.

GPS and collect the following attributes:

CLJN.CL.POLUtilNode_oDispenser
A fuel dispenser is a machine at a fueling station that is used to pump fuel into vehicles or AGE equipment

a) polNodeType - Fuel dispenser
b) networkSubType - automotive_diesel, jpts, etc.
c) operationalStatus - inservice, abandoned, etc.
d) mediaID - GIS Collection Method - CAD, Survey Grade GPS, etc.
e) contractNumber
f) dateInService
g) sdsFeatureName - Fuel Dispenser
h) sdsFeatureDescription - Type of fuel, unleaded, ethanol, diesel, etc.

CLJN.CL.UtilFeat_oPumpingFacility
A structure, typically a building, containing pumps, filters, and controls as part of a larger fuel handling system

a) utilityFeatureIDPK
b) utilityFeatureType - off-loading pumping facility
c) networkSubType automotive_diesel, jpts, etc.
d) operationalStatus - inservice, abandoned, etc.
e) gisFeatureCollectionMethod - - CAD, Survey Grade GPS, etc.

f) contractNumber
g) equipmentInstallationDate
h) sdsFeatureDescription -

1.4.8 CLJN.CL.UTILITIES_STORMWATER

GPS and collect attribute data as specified for each feature listed with GPS accuracy as described in paragraph "Global Positioning System GPS and Spatial Reference Properties." Attribute fields may be associated with Domains, which are utilized to constrain the values allowed in a particular field, attribute table or feature class. Domains must be utilized when populating the feature where required.

GPS and collect the following attributes:

CLJN.CL.Impoundment_Stormwater
An accumulation of storm water that is impounded by a dam or weir

a) permitID - Permit Number
b) impoundmentType - minimumPool, topOfFloodControl, etc.
c) waterSurfaceElevation
d) waterSurfaceElevationUOM - foot, inch, meter, etc.
e) dateConstructed
f) gisFeatureCollectionMethod - CAD, Survey Grade GPS, etc.
g) contractNumber
h) operationalStatus - inservice, abandoned, etc.
i) stormwaterTreatmentType - Infiltration Basin, Constructed Wetlands, etc.
j) utilityOwner

CLJN.CL.StormwaterUtilityNode_swInlet
The location at which stormwater is collected/received into the stormwater network

a) stormwaterUtilityNodeIDPK - Structure ID
b) stormwaterNodeType - swInlet description
c) networkSubType - stormWater
d) stormwaterInletType - Inlet, Headwall, etc.
e) gisFeatureCollectionMethod - CAD, Survey Grade GPS, etc.
f) contractNumber
g) equipmentInstallationDate
h) sdsFeatureDescription -
i) operationalStatus inservice, abandoned, etc.

CLJN.CL.StormwaterUtilitySegment
A subdivision of a stormwater network, particularly a pipeline or drainage ditch for the transport of stormwater, between the source, holding facilities, and/or treatment facilities

a) diameter
b) diameterUOM - inch
c) pipeMaterial - cement, plastic, etc.
d) isLined - YES / NO
e) downstreamInvertElevation
f) upstreamInvertElevation
g) gisFeatureCollectionMethod - - CAD, Survey Grade GPS, etc.

h) contractNumber
i) equipmentInstallationDate
j) sdsFeatureName - Stormwater pipe, Open Ditch, etc.
k) sdsFeatureDescription
l) operationalStatus - inservice, abandoned, etc.
m) stormwaterPipeStyle
n) stormwaterSegmentType - open ditch, closed under other feature type, etc.

CLJN.CL.StorUtilNode_swManhole
A storm water manhole is an underground concrete structure with a top opening used for collecting and routing storm water runoff through underground pipes

a) stormwaterNodeType
b) stormwaterUtilityNodeIDPK - Structure Number
c) numberOfPipes
d) operationalStatus - inservice, abandoned, etc.
e) stormwaterBasinIDFK - Basin id
f) gisFeatureCollectionMethod - CAD, Survey Grade GPS, etc.
g) contractNumber
h) equipmentInstallationDate
i) sdsFeatureName
j) sdsFeatureDescription

1.4.9 CLJN.CL.UTILITIES_THERMAL

GPS and collect attribute data as specified for each feature listed with GPS accuracy as described in paragraph "Global Positioning System GPS and Spatial Reference Properties." Attribute fields may be associated with Domains, which are utilized to constrain the values allowed in a particular field, attribute table or feature class. Domains must be utilized when populating the feature where required.

GPS and collect the following attributes:

CLJN.CL.GeothermalWell
A geothermal well is part of a central heating and/or cooling system that pumps heat to or from the ground

a) geothermalWellIDPK - Well ID
b) pipeMaterial - AL, stainless_steel, etc.
c) geothermalWellCasingMaterial
d) thermalInsulationMaterial - MINERAL_FIBER, ARMAFLEX, etc.
e) geothermalWellDepth
f) geothermalWellDepthUOM - foot, inch, meter, etc.
g) downholePipeDiameter
h) downholePipeDiameterUOM - foot, inch, meter, etc.
i) hasBentoniteSeal - YES / NO
j) hasPump - YES / NO
k) operationalStatus - inservice, abandoned, etc.
l) gisFeatureCollectionMethod - CAD, Survey Grade GPS, etc.
m) contractNumber
n) designDrawingNumber
o) equipmentInstallationDate
p) sdsFeatureDescription - Associated Building Number
q) geothermalPipeType

r) xLocation
s) xLocationUOM - foot, inch, meter, etc.
t) yLocation
u) yLocationUOM - foot, inch, meter, etc.

CLJN.CL.TherUtilNode
The Thermal Fitting Type bend, cap, tee, etc. subclass represents the joint between two lines

a) thermalUtilityNodeIDPK
b) thermalNodeType - tFittingType bend, cap, tee, etc.
c) diameter
d) diameterUOM - foot, inch, meter, etc.
e) operationalStatus - inservice, abandoned, etc.
f) fittingType - bend, cap, tee, etc.
g) mediaID - GIS Collection Method - CAD, Survey Grade GPS, etc.
h) contractNumber
i) dateInService
j) sdsFeatureName
k) sdsFeatureDescription
l) depth
m) depthUOM - foot, inch, meter, etc.
n) facilityNumber
o) fittingType - bend, cap, tee, etc.
p) projectID
q) utilityOwner

CLJN.CL.TherUtilSegment
A subdivision of a thermal distribution network, particularly a pipeline for the transmission of chilled water, refrigerant, hot water, or steam

a) thermalSegmentType - tMainLine, tServiceLine
b) networkSubType
c) operationalStatus - inservice, abandoned, etc.
d) material - AL, stainless_steel, etc.
e) pipeLocation - aboveground, underground, etc.
f) diameter
g) diameterUOM - foot, inch, meter, etc.
h) mediaID - GIS Collection Method - CAD, Survey Grade GPS, etc.
i) contractNumber
j) dateInService
k) sdsFeatureName
l) sdsFeatureDescription
m) cathodicProtection - YES / NO
n) depth
o) depthUOM - foot, inch, meter, etc.
p) facilityNumber
q) pipeType - circular, box, etc.
r) projectID
s) utilityOwner

CLJN.CL.TherUtilNode_tProdStruc
Thermal production structures are facilities which produce steam, high-temperature water, low-temperature water, dual-temperature water or chilled water

a) thermalNodeType - facility which produce steam, etc.
b) Capacity
c) CapacityUOM - foot, inch, meter, etc.
d) operationalStatus - inservice, abandoned, etc.
e) mediaID - GIS Collection Method - CAD, Survey Grade GPS, etc.
f) contractNumber
g) dateInService
h) sdsFeatureName
i) sdsFeatureDescription
j) facilityNumber
k) utilityOwner

CLJN.CL.TherUtilNode_tSystemValve
A thermal system valve is a device installed in a pipeline to isolate flow

a) thermalNodeType
b) systemValveType - gate, ball, etc.
c) diameter
d) diameterUOM - foot, inch, meter, etc.
e) operationalStatus - inservice, abandoned, etc.
f) mediaID - GIS Collection Method - CAD, Survey Grade GPS, etc.
g) contractNumber
h) dateInService
i) depth
j) depthUOM - foot, inch, meter, etc.
k) utilityOwner
l) valveMaterial - AL, stainless_steel, etc.

CLJN.CL.UtilFeat_tUGEnclosureAccess
A point feature class for locating the access point to a thermal manhole junction

a) utilityFeatureType - SCADA, UGEnclosureAccess point, etc.
b) networkSubType - steamSupply, steamReturn, etc.
c) networktype -
d) operationalStatus - inservice, abandoned, etc.
e) gisFeatureCollectionMethod - CAD, Survey Grade GPS, etc.
f) contractNumber
g) diameter
h) diameterUOM - inch, feet, meter, etc.
i) sdsFeatureName - steam pit, etc.

1.4.10 CLJN.CL.UTILITIES_WASTEWATER

GPS and collect attribute data as specified for each feature listed with GPS accuracy as described in paragraph "Global Positioning System GPS and Spatial Reference Properties." Attribute fields may be associated with Domains, which are utilized to constrain the values allowed in a particular field, attribute table or feature class. Domains must be utilized when populating the feature where required.

GPS and collect the following attributes:

CLJN.CL.UtilFeat_sPretreatmentDevice

A wastewater pretreatment device is a piece of equipment that removes contaminants before they enter the waste system, etc.

a) utilityFeatureIDPK - Structure Number
b) utilityFeatureType - Pretreatment Device see existing data
c) operationalStatus - inservice, abandoned, etc.
d) pretreatmentDeviceType - OWS, Trap, etc.
e) gisFeatureCollectionMethod - CAD, Survey Grade GPS, etc.
f) contractNumber
g) equipmentInstallationDate
h) sdsFeatureDescription - detailed description

CLJN.CL.UtilityFeature_sPumpStation
This is a collection of waste water Pump Station is a facility, which indications total capacity for the station

a) utilityFeatureIDPK - Structure Number
b) utilityFeaturetype - Pump station, etc.
c) networkType - wastewater network subtype….
d) numberOfPumps -
e) totalDesignCapacity -
f) designCapacityUOM -
g) totalRatedFlow
h) ratedFlowUOM - GPM, CF_SEC, etc.
i) operationalStatus - inservice, abandoned, etc.
j) gisFeatureCollectionMethod - CAD, Survey Grade GPS, etc.
k) contractNumber
l) equipmentInstallationDate
m) sdsFeatureName
n) sdsFeatureDescription

CLJN.CL.UtilityFeature_sSCADASensor
The SCADA sensor is a feature that is used to remotely measure the status of network components

a) utilityFeatureIDPK - Structure Number
b) utilityFeatureType - SCADA
c) networkType - wastewater
d) operationalStatus - inservice, abandoned, etc.
e) gisFeatureCollectionMethod - CAD, Survey Grade GPS, etc.
f) contractNumber
g) equipmentInstallationDate
h) sdsFeatureName
i) sdsFeatureDescription - Antenna Radio to Location

CLJN.CL.UtilityFeature_sSepticTank
A wastewater septic tank is a small-scale anaerobic digester and leach field designed to treat wastewater from an individual facility, and is not connected to the wastewater collection system

a) utilityFeatureIDPK - Structure Number
b) utilityFeatureType - septic tank
c) storageTankProduct - domestic wastewater
d) volume
e) volumeUOM - usGallon, cubicMeter, etc.
f) isRegulated - YES / NO

g) operationalStatus - inservice, abandoned, etc.
h) gisFeatureCollectionMethod - CAD, Survey Grade GPS, etc.
i) contractNumber
j) equipmentInstallationDate
k) sdsFeatureName - Septic Tank
l) sdsFeatureDescription - Location area name

CLJN.CL.WastUtilNode_sCleanOut
A clean out is an access point in a lateral used for maintenance purposes

a) wastewaterNodeType - Cleanout
b) material - PVC, etc.
c) diameter
d) diameterUOM - inch, meter, etc.
e) operationalStatus - inservice, abandoned, etc.
f) mediaID - GIS Collection Method - - CAD, Survey Grade GPS, etc.
g) contractNumber
h) utilityOwner

CLJN.CL.WastUtilNode_sFitting
The wastewater fitting that represents the join between two lines

a) fittingType - Bend, Cap, Tee, etc.
b) sdsFeatureDescription - Ben, Cap, Tee, Wye, etc.
c) diameter
d) diameterUOM - foot, inch, meter, etc.
e) operationalStatus - inservice, abandoned, etc.
f) material - PVC, precast, stainless steel, etc.
g) mediaID - GIS Collection Method - - CAD, Survey Grade GPS, etc.
h) contractNumber
i) fittingType - bend, cap, tee, etc.
j) utilityOwner

CLJN.CL.WastUtilNode_sManhole
The wastewater manhole represents an access point between two or more lines

a) wastewaterNodeType - sManhole
b) operationalStatus - inservice, abandoned, etc.
c) numberOfPipes
d) pipeMaterial - precast brick, etc.
e) diameter
f) diameterUOM - inch, etc.
g) rimElevation
h) rimElevationUOM - foot, inch, meter, etc.
i) mediaID - GIS Collection Method - - CAD, Survey Grade GPS, etc.
j) contractNumber
k) dateInService
l) sdsFeatureName - Manhole, Valve box, etc.
m) manholeMaterial - precast brick, etc.
n) utilityOwner

CLJN.CL.WastUtilNode_sPump
A wastewater pump is a piece of equipment that adds energy to a fluid being conveyed through a pipe or other closed conduit

a) facilityNumber
b) numberOfPumps
c) operationalStatus - inservice, abandoned, etc.
d) wastewaterNodeType - sPump
e) ratedFlow
f) ratedFlowUOM - GPM, CF_SEC, etc.
g) pumpHorsepower
h) contractNumber
i) dateInService
j) mediaID - GIS Collection Method - - CAD, Survey Grade GPS, etc.
k) sdsFeatureName - Wastwater Pump, Lift Station, etc.
l) utilityOwner

CLJN.CL.WastUtilNode_sSystemValve
A system valve is a facility that is fitted to a pipeline or orifice in which the closure member is either rotated or moved transversely or longitudinally in the waterway so as to control or stop the flow

a) wastewaterNodeType - sSystemValve
b) valveMaterial - stainless_steel, etc.
c) diameter
d) diameterUOM - inch, meter, etc.
e) operationalStatus - inservice, abandoned, etc.
f) valveType - gate, butterfly, check, etc.
g) mediaID - GIS Collection Method - CAD, Survey Grade GPS, etc.
h) contractNumber
i) dateInService
j) utilityOwner

CLJN.CL.WastUtilNode_sTreatmentPlant
A facility designed to treat wastewater using physical, chemical and/or biological processes prior to discharge into receiving waters

a) wastewaterNodeType - facility designed to treat wastewater
b) Capacity
c) CapacityUOM - gallons, meter, etc.
d) ContractNumber
e) operationalStatus - inservice, abandoned, etc.
f) facilityNumber - Structure Number
g) mediaID - GIS Collection Method - - CAD, Survey Grade GPS, etc.
h) dateInService
i) sdsFeatureName

CLJN.CL.WastUtilSegment
Wastewater Line - A pipeline for the transport of sewage or industrial waste between the source, holding facilities, and/or treatment facilities

a) wastewaterSegmentType - Gravity, Force Main, Service etc.
b) utilityOwner - CLJN / ONWASA
c) operationalStatus - inservice, abandoned, etc.
d) pipeMaterial - PVC, VC, etc.
e) isLined - YES / NO
f) diameter
g) diameterUOM -foot, inch, meter, etc.
h) mediaID - GIS Collection Method - - CAD, Survey Grade GPS, etc.
i) contractNumber
j) dateInService
k) sdsFeatureName -
l) invertElevationDownstream
m) invertElevationUpstream
n) invertElevationUOM - foot, inch, meter, etc.
o) slope

1.4.11 CLJN.CL.UTILITIES_WATER

GPS and collect attribute data as specified for each feature listed with GPS accuracy as described in paragraph "Global Positioning System (GPS) and Spatial Reference Properties." Attribute fields may be associated with Domains, which are utilized to constrain the values allowed in a particular field, attribute table or feature class. Domains must be utilized when populating the feature where required.

GPS and collect the following attributes:

CLJN.CL.UtilFeat_wUGEnclosureAccess
A point feature class for locating the access point to a water manhole junction

a) utilityFeatureIDPK - Manhole Number
b) numberOfPipes
c) groundElevation
d) elevationUOM - inch, foot, meter, etc.
e) operationalStatus - inservice, abandoned, etc.
f) gisFeatureCollectionMethod - CAD, Survey Grade GPS, etc.
g) contractNumber
h) equipmentInstallationDate
i) sdsFeatureName - Manhole
j) utilityFeatureType - wUGEnclosureAccess
k) waterServiceAreaIDFK - Holcomb, Hadnot Pt, Onslow Beach, etc.

CLJN.CL.WaterUtilNode_wFittingType bend, cap, tee, etc.
The water fitting class represents the joint between two lines in the water network

a) waterNodeType - fitting class represents transition between two lines
b) diameter -
c) diameterUOM - inch, meter, etc.
d) operationalStatus -inservice, abandoned, etc.
e) fittingType - reducer, bend, cap, tee, etc.
f) mediaID - GIS Collection Method - CAD, Survey Grade GPS, etc.
g) contractNumber
h) dateInServicen

CLJN.CL.WaterUtiNode_wHydrant
A water distribution point that enables fire fighters to attach fire hoses

a) waterNodeType - wHydrant
b) networkSubType - fireProtectionwater
c) operationalStatus - inservice, abandoned, etc.
d) connectionType - fireconnect, firehydrant
e) facilityNumber - Structure number if connection is to structure
f) mediaID - GIS Collection Method - CAD, Survey Grade GPS, etc.
g) contractNumber
h) dateInService

CLJN.CL.WaterUtilNode_wMeterPoint
A water meter point represents the location of the metering device

a) waterNodeType - meterPoint
b) operationalStatus - inservice, abandoned, etc.
c) projectID - area name
d) mediaID - GIS Collection Method - CAD, Survey Grade GPS, etc.
e) contractNumber
f) diameter
g) diameterUOM - foot, inch, meter, etc.
h) dateInService

CLJN.CL.WateUtilNode_wReliefValve
A valve used to relieve pressure

a) operationalStatus
b) sdsFeatureDescription
c) sdsFeatureName - Air Release Valve
d) contractNumber
e) dateInService
f) diameter
g) diameterUOM
h) mediaID - GIS Collection Method - CAD, Survey Grade GPS, etc.
i) projectID
j) utilityOwner

CLJN.CL.WaterUtilNode_wSystemValve
A valve used to regulate pressure, isolate, throttle flow, prevent backflow

a) waterNodeType - wSystemValve
b) diameter
c) diameterUOM - foot, inch, meter, etc.
d) operationalStatus - inservice, abandoned, etc.
e) valveType - gate, ball, etc.
f) projectID - MCASNR, MCBCLJN, Geiger, etc
g) mediaID - GIS Collection Method -- CAD, Survey Grade GPS, etc.
h) contractNumber
i) dateInService

j) valveType - Gate Valve, Post Indicator Valve, etc.

CLJN.CL.WaterUtilSegment
A subdivision of a water distribution network, particularly a distribution pipeline

a) networkSubType - potable water, raw water, Service, Fire etc.
b) material - PVC, Ductile Iron, Cement, etc,
c) diameter
d) diameterUOM - inch
e) utilityOwner - MBCCLJN, Onwasa, etc.
f) operationalStatus -inservice, abandoned, etc.
g) projectID
h) mediaID - GIS Collection Method /- CAD, Survey Grade GPS, etc.
i) contractNumber
j) dateInService
k) sdsFeatureName - Main, Service, Fire, AIP, Raw, etc.
l) invertElevationDownstream
m) invertElevationUpstream

CLJN.CL.WateUtilNode_wProdStructure
Water production structures are facilities which produce raw or treated water

a) waterNodeType - produce treated water, etc.
b) facilityNumber - Structure Number
c) capacity
d) capacityUOM - gallons per day, etc
e) operationalStatus - inservice, abandoned, etc.
f) mediaID - GIS Collection Method - CAD, Survey Grade GPS, etc.
g) contractNumber
h) dateInService
i) sdsFeatureName - Water Treatment Plant, Location
j) sdsFeatureDescription - Describe Plant purpose

CLJN.CL.WateUtilNode_wStorageStructure
Water storage structures are facilities that store large volumes of water - Water Tank)

a) facilityNumber - structure number
b) waterNodeType - water Storage Structure
c) storageTankProduct - treatedWater, rawWater, etc.
d) volume
e) volumeUOM - gallons, etc.
f) tankType - Elevated, Under Ground, Above Ground, etc.
g) operationalStatus - inservice, abandoned, etc.
h) width
i) widthUOM - foot, etc.
j) groundElevation
k) invertElevation
l) overflowElevation
m) surfaceElevation
n) elevationUOM - foot, etc.
o) projectID - Named Area of Location, Hadnot Point, etc.
p) mediaID - GIS Collection Method - CAD, Survey Grade GPS, etc.

q) contractNumber
r) dateInService
s) storageTypeProduct - Raw water or Potable Water

1.4.12 Non-Compliance

Failure to follow the specification outlined in this document will result in non-acceptance of data deliverable.

Note: Geospatial data delivery does not replace record drawing requirements.

PART 2 PRODUCTS

Not Used.

PART 3 EXECUTION

Not Used.

-- End of Section --

SECTION 01 91 00.15 22

TOTAL BUILDING COMMISSIONING
10/18

PART 1 GENERAL

1.1 SUMMARY

Commission the building systems listed herein. The Government will employ the services of an independent, Commissioning Firm acting as the Commissioning Authority (CxA). The Contractor will support the commissioning efforts described herein. Conform to the commissioning procedures outlined in this specification. and the Design Phase Commissioning Plan in Appendix A.

1.2 SYSTEMS TO BE COMMISSIONED

Commission the following systems:

Heating, Ventilating, Air Conditioning, and Refrigeration Systems (HVAC)
Building Automation System
Utility Monitoring and Control System
Lighting Systems
Power Distribution Systems
Natural Gas and Propane Systems
Building Envelope: moisture and thermal integrity and air tightness
Fenestration Control Systems

1.3 COMMUNICATION WITH THE GOVERNMENT

Submit all plans, schedules, reports, and other requested documentation directly to the CxA concurrently with the Contracting Officer's Technical Representative (CTOR) in accordance with Section 01 33 00 SUBMITTAL PROCEDURES.

1.4 SEQUENCING AND SCHEDULING

1.4.1 Sequencing

Complete Functional Performance Tests of HVAC systems prior to Performance Verification Tests required by Specification Section 23 09 00 INSTRUMENTATION AND CONTROL FOR HVAC. Complete the following prior to starting Functional Performance Tests of mechanical systems:

a. All equipment and systems have been completed, cleaned, flushed, disinfected, calibrated, tested, and operate in accordance with contract documents and construction plans and specifications.

b. Testing, Adjusting, and Balancing has been completed and the Testing, Adjusting, and Balancing Report, and all TAB and DALT related submittals prerequisite to the TAB Report, have been submitted and approved in accordance with Specification Section 23 05 93.00 22 TESTING, ADJUSTING, AND BALANCING FOR MECHANICAL SYSTEMS.

c. The building envelope is enclosed according to contract documents with

final construction completed, the Air Barrier Pressure Tests have been completed and the Air Leakage Test Reports and Diagnostic Test Reports have been submitted and approved in accordance with Specification Section 07 05 23 PRESSURE TESTING AN AIR BARRIER SYSTEM FOR AIR TIGHTNESS.

d. The Pre-Functional Checklists have been submitted and approved.

e. The Certificate of Readiness for mechanical systems has been submitted and approved.

Complete the following prior to starting Functional Performance Tests of the electrical systems:

a. All electrical, power generation, and lighting equipment and systems have been completed, calibrated, tested, and operate in accordance with contract documents and construction plans and specifications.

b. The building envelope is enclosed according to contract documents with final construction completed.

c. Ceiling tiles, floor coverings, and window coverings are in place.

d. The Certificate of Readiness for electrical systems has been submitted and approved.

1.4.2 Project Schedule

Include the following tasks in the project schedule required by Section 01 32 17.00 20 NETWORK ANALYSIS SCHEDULES (NAS). Ensure sufficient time is scheduled to accommodate the requirements of this specification section. The order of items listed below is not intended to imply a specified sequence:

a. Submission and approval of the Testing, Adjusting, and Balancing (TAB) Firm and TAB Specialist specified in Section 23 05 93.00 22 TESTING, ADJUSTING, AND BALANCING FOR MECHANICAL SYSTEMS.

b. Submission of the Design Review Report specified in Section 23 05 93.00 22 TESTING, ADJUSTING, AND BALANCING FOR MECHANICAL SYSTEMS.

c. Installation of permanent utilities (gas, water, electric).

d. Building Envelope Construction.

f. Factory Acceptance Testing for each of the systems to be commissioned as required by technical specifications.

g. Manufacturer's Equipment Start-Up for each of the systems to be commissioned.

h. Submission and approval of the TAB Schematic Drawings, Report Forms, Design Review Report and Procedures specified in Section 23 05 93.00 22 TESTING, ADJUSTING, AND BALANCING FOR MECHANICAL SYSTEMS.

i. Submission and approval of Duct Air Leakage Test Procedures specified in Section 23 05 93.00 22 TESTING, ADJUSTING, AND BALANCING FOR HVAC.

j. Duct Air Leakage Test Execution specified in Section 23 05 93.00 22

TESTING, ADJUSTING, AND BALANCING FOR MECHANICAL SYSTEMS.

k. Submission and approval of the Final Duct Air Leakage Test Report specified in Section 23 05 93.00 22 TESTING, ADJUSTING, AND BALANCING FOR MECHANICAL SYSTEMS.

l. Testing, Adjusting, and Balancing (TAB) Field Work required by Section 23 05 93 TESTING, ADJUSTING, AND BALANCING FOR MECHANICAL SYSTEMS.

m. Submission and approval of the TAB Report specified in Section 23 05 93.00 22 TESTING, ADJUSTING, AND BALANCING FOR MECHANICAL SYSTEMS.

n. TAB Field Acceptance Testing required by Section 23 05 93.00 22 TESTING, ADJUSTING, AND BALANCING FOR MECHANICAL SYSTEMS.

o. Submission and approval of the Start-Up Testing Report specified in Section 23 09 00.00 22 INSTRUMENTATION AND CONTROL FOR HVAC.

p. Submission and approval of the Performance Verification Test Procedures specified in Section 23 09 00.00 22 INSTRUMENTATION AND CONTROL FOR HVAC.

q. Performance Verification Tests required by Section 23 09 00.00 22 INSTRUMENTATION AND CONTROL FOR HVAC.

r. Performance Verification Test Report specified in Section 23 09 00.00 22 INSTRUMENTATION AND CONTROL FOR HVAC.

s. Pre-Functional Checklist Submittal.

t. Functional Performance Testing for each system to be commissioned.

u. Integrated Systems Tests.

v. Post-Test Deficiency Correction for each system to be commissioned.

w. Re-Testing.

x. Endurance Tests.

y. Training for each of the systems to be commissioned.

z. Systems Manual, submission and approval.

1.5 SUBMITTALS

Government approval is required for submittals with a "G" designation; submittals not having a "G" designation are for Contractor Quality Control approval. Submittals with an "S" are for inclusion in the Sustainability eNotebook, in conformance to Section 01 33 29 SUSTAINABILITY REPORTING. Submit the following in accordance with Section 01 33 00 SUBMITTAL PROCEDURES:

SD-06 Test Reports

Completed Building Envelope Inspection Checklists; G

Completed Pre-Functional Checklists; G

SD-07 Certificates

Certificate of Readiness; G

SD-10 Operation and Maintenance Data

Training Plan; G

Training Attendance Rosters; G

Systems Manual; G

1.6 GOVERNMENT ACCEPTANCE ENGINEER

A Government Acceptance Engineer will perform many of the Government Quality Assurance functions for the project including review of select submittals, plans, procedures, reports, and inspection and testing of systems. The Government Acceptance Engineer will participate in TAB Field Acceptance Testing and Performance Verification Tests. Coordinate submittal transmission and testing schedules with the Contracting Officer's Technical Representative and the Government Acceptance Engineer.

[1.7 SUSTAINABILITY THIRD PARTY CERTIFICATION (TPC)

The Contractor must execute and document the commissioning activities required of the Commissioning Authority (CxA)for the purposes of complying with the Third Party Certification (TPC) requirements for the project in accordance with Section 01 33 29 SUSTAINABILITY REPORTING. Provide all commissioning documentation required to meet the TPC requirements.

]1.8 ISSUES LOG

The CxA will develop and maintain an Issues Log for tracking and resolution of all deficiencies discovered through commissioning review, inspection, and testing. The log will include areas for the date of initial discovery of each issue, description of each issue, the Contractor response / corrective action for each issue, and the date of final resolution of each issue as confirmed by the CxA or Government Acceptance Engineer. The CxA will provide to the Contractor the Issues Log on a monthly basis at a minimum. At any point during construction, any commissioning team member finding deficiencies must communicate those deficiencies in writing to the CxA within three working days of the discrepency discovery for inclusion into the Issues Log. The Contractor is responsible for providing, within five working days, responses, updates and resolutions to identified issues.

Track construction deficiencies identified in the Issues Log in accordance with the Quality Control Plan required by Specification Section 01 45 00.10 20 QUALITY CONTROL.

1.9 CERTIFICATE OF READINESS

Prior to scheduling Functional Performance Tests for each system, issue a Certificate of Readiness for the system certifying that the system is ready for Functional Performance Testing. The Certificate of Readiness must include, for each system to be commissioned, all equipment and system start-up reports; completed Building Envelope Inspection Checklists; completed Pre-Functional Checklists; Testing, Adjusting, and Balancing (TAB) Report; HVAC Controls Start-Up Reports[; and the Air Leakage Test

Reports and Diagnostic Test Reports] to the extent applicable to the system. The Contractor; the Lead Commissioning Specialist; the Contractor's Quality Control Representative; the Mechanical, Electrical, Controls, and TAB subcontractor representatives must sign and date the Certificate of Readiness. Submit the Certificate of Readiness for each system no later than 14 calendar days prior to Functional Performance Tests of that system. Submit an electronic copy. Do not schedule Functional Performance Tests for a system until the Certificate of Readiness for that system receives approval by the Government.

PART 2 PRODUCTS

Not used

PART 3 EXECUTION

3.1 CONSTRUCTION PHASE

3.1.1 Construction Commissioning Coordination Meeting

The Commissioning Authority (CxA) will lead a Construction Commissioning Coordination Meeting no later than 14 days after approval of the Commissioning Firm and Commissioning Specialists to discuss the commissioning process including contract requirements, lines of communication, roles and responsibilities, schedules, documentation requirements, inspection and test procedures, and logistics as specified in this specification section. The Contractor's Superintendent or Project Manager, the Contractor's Quality Control Representative, any applicable Sub-Contractor representatives, and the Government must attend this meeting. Invite the User and a Public Works Division Representative, [_____] to attend this meeting.

[3.1.2 Design Phase Commissioning Plan

A commissioning plan developed during design phase is provided as Appendix A. The design phase commissioning plan is a part of this contract.

]3.1.3 Construction Phase Commissioning Plan

3.1.3.1 Interim Construction Phase Commissioning Plan

The Commissioning Authority (CxA) will prepare and distribute to the Commissioning Team the Interim Construction Phase Commissioning Plan, based on the Design Phase Commissioning Plan. After the Construction Commissioning Coordination Meeting the Interim Construction Phase Commissioning Plan will be an update of the Design Phase Cx Plan as a result of the Commissioning Coordination Meeting discussions and any applicable resolved request for information, awarded change orders, actual equipment operation conditions, and other items that impact or otherwise alter the content of the Design Phase Commissioning Plan. This Interim Cx Plan will include the checklists identified as part of the Final Construction Phase Commissioning Plan. The Contractor will provide supporting input and product data.

3.1.3.2 Final Construction Phase Commissioning Plan

The Commissioning Authority (CxA) will prepare and distribute the Final Construction Phase Commissioning Plan prior to the start of Pre-Functional Checks.

The Final Construction Commissioning Plan will include the information provided in the Interim Construction Phase Commissioning Plan. The Commissioning Authority (CxA) will develop the Pre-Functional Checklists, Integrated Systems Test Checklists, and Functional Performance Test Checklists for each building, for each system required to be commissioned, and for each component for inclusion in the Final Construction Phase Commissioning Plan. The Contractor will review and provide supporting input and product data.

3.1.3.2.1 Pre-Functional Checklists

The Pre-Functional Checklists will include items for physical inspection or testing that demonstrate that installation and start-up of equipment and systems is complete. See paragraph Pre-Functional Checks for more information.

3.1.3.2.2 Functional Performance Test Checklists

Functional Performance Test Checklists will include procedures that explain, step-by-step, the actions and expected results that will demonstrate that the system performs in accordance with the contract. See paragraph Functional Performance and Integrated Systems Tests for more information. The Checklist will include the following sections and details appropriate to the systems being tested:

a. Notable system features including information about such attributes as system sizing and controls to facilitate understanding of system operation.

b. Conclusions and recommendations based on control system feature, point-to-point, actuator, and system operation observations. Conclusions will clearly indicate if system does or does not perform in accordance with contract requirements. Recommendation will clearly indicate that the system should or should not be accepted by the Government.

c. Test conditions including date, beginning and ending time, and beginning and ending outdoor air conditions.

d. Attendees present throughout the entire system test.

e. Identification of the equipment involved in the test.

f. Control system feature identification including control point description, embedded/visible type, adjustable/monitoring type, actual value, and setpoint value/alarm range.

g. Point-to-point observations including demonstrating system flow meters and sensors have been calibrated and are correctly displayed on the Operator work station.

h. Actuator operation observations demonstrating actuator responses to commands from the control system.

i. System operation observations for system-based tests demonstrating each control algorithm, operation mode, and alarm condition resulting from control point(s) manipulation. System operation observations must contain the following:

(1) Introduction identifying testing methodology

(2) As-found conditions prior to control point(s) manipulation

(3) Clear list of test items (step numbers)

(4) Control algorithm (design control sequence) segmented by unique functions

(5) Intended test procedures following each segmented control algorithm identifying control point(s) required to be manipulated to initiate system response

(6) Expected system response

(7) Space for comments for each test item complete including resulting control signal such as 0-volts, 10-volts, active, or inactive

(8) Pass or fail indication for each test item

3.1.3.2.3 Integrated Systems Test Checklists

The Integrated Systems Test Checklists will include test procedures that explain, step-by-step, the actions and expected results that will demonstrate that the system performs in accordance with the contract. See paragraph Functional Performance and Integrated Systems Tests for more information. The Checklist will include the following sections:

a. Notable features of the interconnected systems organized by discipline including information to facilitate understanding of system operation

b. Conclusions and recommendations based on observations of interconnected system operation. Conclusions must clearly indicate if the systems do or do not perform in accordance with contract requirements. Recommendation must clearly indicate that the systems should or should not be accepted by the Government

c. Test conditions including date and beginning and ending time

d. Attendees present throughout the entire system test

e. Identification of the equipment and systems involved in the test

f. Identification of dates for the completion and approval of relevant functional performance test checklists, and identify the Contractor's Quality Control Personnel that accepted and signed the related functional performance test checklists.

g. Interconnected system operation observations for tests demonstrating each operation resulting from system manipulation. System operation observations must contain the following:

(1) Introduction identifying testing methodology.

(2) As-found conditions prior to system manipulation.

(3) Clear list of test items (step numbers).

(4) Design control sequences or interlocks segmented by unique functions.

(5) Intended test procedures following each segmented sequence or interlock identifying the system manipulation required to initiate system response.

(6) Expected system responses.

(7) Space for comments for each test item.

(8) Pass or fail indication for each test.

3.1.4 Construction Submittals

Provide all submittals associated with the systems to be commissioned, including shop drawings; equipment submittals; test plans, procedures, and reports; and resubmittal's to the Commissioning Authority (CxA).

3.1.5 Inspection and Testing

Demonstrate that all system components have been installed, that each control device and item of equipment operates, and that the systems operate and perform, including interactive operation between systems, in accordance with contract documents and the Owner's Project Requirements. Requirements in related specification sections are independent from the requirements of this section and do not satisfy any of the requirements specified in this specification section. Provide all materials, services, and labor required to perform the Pre-Functional Checks, Building Envelope Inspection, Integrated Systems Tests, and Functional Performance Tests.

The Commissioning Authority (CxA) will, from time to time, perform site visits to observe construction of the systems in progress and will distribute to the Commissioning Team the results of those visits as a Site Visit Report. Deficiencies contained in the Site Visit Report will be documented in the Issues Log for action.

The Commissioning Authority (CxA) will document discrepancies and other issues discovered during testing in the Issues Log for action.

3.1.5.1 Commissioning Team

The Commissioning Team Members will be defined in the Interim and Final Construction Phase Commissioning Plans. Provide a commissioning representative for each sub-contractor associated with the systems to be commissioned. Each commissioning representative is responsible for coordination of their respective sub-contractor's execution of the commissioning activities and participation in the inspection and testing required by this specification section. The designers listed below are the designers of record for their respective systems. Substitutes must be approved by the Contracting Officer's Technical Representative.

3.1.5.1.1 Building Envelope Inspections Team

The following team members must participate in building envelope inspections:

Designation	Function
CxA	Building Envelope Technical Commissioning Specialist
QAR	Contracting Officer's Quality Assurance Representative
CQC	Contractor's Quality Control Personnel
BEC	Contractor's Building Envelope Commissioning Representative
[AD]	[Architectural Designer]

3.1.5.1.2 Mechanical System Pre-Functional Checks Team

The following team members must participate in Pre-Functional checks of mechanical systems:

Designation	Function
CQC	Contractor's Quality Control Personnel
MC	Contractor's Mechanical Commissioning Representative
EC	Contractor's Electrical Commissioning Representative
CC	Contractor's Controls Commissioning Representative
TABC	Contractor's TAB Commissioning Representative
PC	Contractor's Plumbing Commissioning Representative

3.1.5.1.3 Electrical System Pre-Functional Checks Team

The following team members must participate in Pre-Functional checks of electrical systems:

Designation	Function
CQC	Contractor's Quality Control Personnel
EC	Contractor's Electrical Commissioning Representative

3.1.5.1.4 Mechanical Systems Test Team

The following team members must participate in Functional Performance, Seasonal, and Integrated Systems Testing of mechanical systems:

Designation	Function
CxA	Mechanical System Technical Commissioning Specialist
QAR	Contracting Officer's Quality Assurance Representative
CQC	Contractor's Quality Control Personnel
MC	Contractor's Mechanical Commissioning Representative
EC	Contractor's Electrical Commissioning Representative
CC	Contractor's Controls Commissioning Representative
TABC	Contractor's TAB Commissioning Representative
PC	Contractor's Plumbing Commissioning Representative
IC	Contractor's Irrigation Commissioning Representative
[MD]	[Mechanical Designer]

[3.1.5.1.5 Electrical Systems Test Team

The following team members must participate in Functional Performance and Integrated Systems Testing of electrical systems:

Designation	Function
CxA	Electrical System Technical Commissioning Specialist
QAR	Contracting Officer's Quality Assurance Representative
CQC	Contractor's Quality Control Personnel
EC	Contractor's Electrical Commissioning Representative
[ED]	[Electrical Designer]

]3.1.5.1.6 Other Pre-Functioanl and Functional Performance Participants

The following may participate as team members during Pre-Functional Checks and Functional Performance Testing:

Designation	Function
DPW	Directorate of Public Works Representative
PWD	Public Works Division Representative
User	Using Agent's Representative

3.1.5.2 Building Envelope Inspection

Document building envelope inspection by the commissioning team using the approved Template Building Envelope Inspection Checklists. Indicate commissioning team member inspection and acceptance of each Building Envelope Inspection Checklist item by initials at the time they are inspected and found to be in conformance with contract requirements. Inspect checklist items before they become hidden as construction progresses.

a. Submit the initialed and completed Building Envelope Inspection Checklists no later than 7 calendar days after completion of inspection of all checklists items. Submit an electronic copy.

b. The Commissioning Authority (CxA) will make at least two site visits to the site to observe construction of the building envelope in-progress. On each visit, the Commissioning Authority (CxA) will review the Contractor's in-progress checklists to ensure that the commissioning team is inspecting the building envelope as required.

c. The Commissioning Authority (CxA) will witness the building envelope pressure tests and diagnostic tests specified in Specification Section 07 05 23 PRESSURE TESTING AN AIR BARRIER SYSTEM FOR AIR TIGHTNESS. The Commissioning Authority (CxA) will review the resulting reports and provide recommendations for correction of any deficiencies or further testing.

3.1.5.3 Pre-Functional Checks

Pre-Functional Checklists from the approved Final Construction Phase Commissioning Plan must be completed by the Contractor. Complete one Pre-Functional Checklist for each individual item of equipment or system for each system required to be commissioned including, but not limited to, ductwork, piping, equipment, fixtures (lighting and plumbing), and controls. Indicate Contractor team member inspection and acceptance of each Pre-Functional Checklist item by initials. Acceptance of each Pre-Functional Checklist item by each team member indicates that item conforms to the construction contract requirements in their area of responsibility. Submit an electronic copy. Include completed manufacturer start-up checklists associated with equipment with the submission of the completed Pre-Functional Checklists.

3.1.5.4 Tests

3.1.5.4.1 Functional Performance and Integrated Systems Tests

Schedule Functional Performance Tests for each system only after the Certificate of Readiness has been approved by the Government for the system. Provide written notice to the Commissioning Team of the Proposed initial start date of the Functional Performance Testing no later than 7 calendar days prior to the proposed start date.

a. Technical Commissioning Specialists must lead and document all Functional Performance Tests and Integrated Systems Tests for the systems to be commissioned with the Contractor and appropriate sub-contractors performing the Functional Performance Tests and Integrated Systems Tests. The representatives listed in the paragraph Commissioning Team must attend the tests. Abort Functional Performance Tests or Integrated Systems Tests when any required commissioning team member is not present for the test.

3.1.5.4.1.1 Checklist

Use the Functional Performance Test and Integrated Systems Test Checklists from the approved Final Construction Phase Commissioning Plan to guide the Functional Performance Tests and Integrated Systems Tests. Functional Performance Tests must be performed for each item of equipment and each system required to be commissioned and verify all sensor calibrations, control responses, safeties, interlocks, operating modes, sequences of operation, capacities, lighting levels, and all other performance requirements comply with construction contract regardless of the specific items listed within the Functional Performance Test and Integrated Systems Test Checklists provided. Testing must progress from equipment or components to subsystems to systems to interlocks and connections between systems. Integrated Systems Tests must be performed for the interactive operation between systems such as HVAC systems, fire protection systems, back-up electrical supply, energy generation systems, and other systems, and verify correct interactive operation, acceptable speed of response, and other contract requirements for both normal and failure modes. Examples of Integrated Systems Tests include the correct operation of HVAC systems during emergency system activation, correct operation of uninterruptible power supplies or energy generators and connected systems, or lighting system operation during power outage or emergency system activation. The order of components and systems to be tested will be determined by the Commissioning Authority (CxA).

3.1.5.4.1.2 Acceptance

Indicate acceptance of each item of equipment and systems tested by signature of each commissioning team member for each Functional Performance Test or Integrated Systems Test Checklist. The Contractor's Quality Control Representative and the Commissioning Authority (CxA) will indicate acceptance after the equipment and systems are free of deficiencies.

3.1.5.4.2 HVAC Test Methods

Perform Functional Performance Tests in accordance with the following:

3.1.5.4.2.1 Prior to Testing

Prior to system testing, complete control system feature, point-to-point, and actuator observations.

3.1.5.4.2.2 Simulating Conditions

Over-writing control input (actual) values through the controls system is not acceptable, unless approved by the Contracting Officer's Technical Representative. Identify proposed exceptions in a protocol submitted to the Contracting Officer's Technical Representative for approval. Before simulating conditions, overwriting values (if approved), or changing set-points, calibrate all sensors, transducers and devices. Below are several examples of exceptions that would be considered acceptable:

a. When varying static pressures inside ductwork can not be simulated within the duct, and where a sensor signals the controls system to initiate sequences at various duct static pressures, it is acceptable to simulate the various pressures with a Pneumatic Squeeze-Bulb Type Signaling Device with gauge temporarily attached to the sensing tube leading to the transmitter. It is not acceptable to reset the various set-points, nor to simulate an electric analog signal (unless approved as noted above).

b. Dirty filter pressure drops can be simulated using sheets of cardboard at filter face.

c. Freeze-stat safeties can be simulated by packing portion of sensor with ice.

d. High outside air temperatures can be simulated with a hair blower.

e. High entering cooling coil temperatures can be used to simulate entering cooling coil conditions.

f. Do not use signal generators to simulate sensor signals unless approved by the Contracting Officer's Technical Representative, as noted above, for special cases.

g. Control set points can be altered. For example, to see the air conditioning compressor lockout work at an outside air temperature below 55 degrees F, when the outside air temperature is above 55 degrees F, temporarily change the lockout set point to be 0 degrees F above the current outside air temperature. Caution: Set points are not to be raised or lowered to a point such that damage to the components, systems, or the building structure and/or contents will occur.

h. Test duct mounted smoke detectors in accordance with the manufacturer's recommendations. Perform the tests with air system at minimum airflow condition in ductwork.

i. Test current sensing relays used for fan and pump status signals to control system to indicate unit failure and run status by resetting the set point on the relay to simulate a lost belt or unit failure while the unit is running. Confirm that the failure alarm was generated and received at the control system. After the test is conducted, return the set point to its original set-point or a set-point as indicated by the Contracting Officer's Technical Representative.

3.1.5.4.2.3 Setup

Perform each test under conditions that simulate actual conditions as close as is practically possible. Provide all necessary materials and system modifications to produce the necessary flows, pressures, temperatures, and other conditions necessary to execute the test according to the specified conditions. At completion of the test, return the affected building equipment and systems to their pre-test condition.

3.1.5.4.3 Sample Strategy

[Perform Functional Performance Tests using the following sample strategy. Prepare and complete a Functional Performance Test Checklist for each item of equipment or system to be tested. For sample sizes less than 100 percent for all similar equipment, the Government will select the specific equipment or system to be tested during testing. Equipment Identifiers are as indicated on the design drawings:

Equipment Identifier	Sample Size (Percent)
AHU	[_____]
VAV	[_____]
CUH	[_____]
CWP	[_____]
DWH	[_____]
Lighting Controls	[_____]
Renewable Energy Systems/Equipment	[_____]

Perform Integrated Systems Tests for all systems and equipment having interactive operation.]

3.1.5.4.4 Endurance Test

Following successful completion of Functional Performance Tests for HVAC systems and prior to the Performance Verification Test, perform an Endurance Test of the HVAC systems in accordance with the paragraph Endurance Test in Specification Section 23 09 00.00 22 INSTRUMENTATION AND CONTROL FOR HVAC. Use the Temporary Trending Hardware, if necessary, in accordance with Specification Section 23 09 00.00 22 INSTRUMENTATION AND CONTROL FOR HVAC. Perform the test with all equipment and systems in full automatic mode. Restart the test if the equipment and systems or setpoints are overridden to manual mode at any time during the test. Poll all points shown in the project schedules with an alarm condition at 5 minute intervals. Poll all points shown in the Point Schedule required for trending, overrides, or graphical displays at 15 minute intervals. In instances where the equipment performance or operation dictates, perform subsequent endurance testing of duration determined by the CxA on the applicable point(s) at a higher polling rate to identify anomalies hidden by the above polling rates. For example, an air handler with a modulating compressor supplied cooling coil may require sampling coil discharge air temperature at 30 second intervals during the morning start-up period.

Provide an Endurance Test Report with the Commissioning Report that includes a graphical representation of all trends with all trend data clearly identified.

3.1.5.4.5 Seasonal Tests

3.1.5.4.5.1 Initial Functional Performance Tests

Perform Initial Functional Performance Tests as soon as all contract work is completed, regardless of the season. Develop and implement means of artificial loading to demonstrate, to a reasonable level of confidence, the ability of the HVAC systems to handle peak seasonal loads.

3.1.5.4.5.2 Full-Load Conditions

In addition to the Initial Functional Performance Tests, perform Functional Performance Tests of HVAC systems under full-load conditions during peak heating and cooling seasons during outdoor air condition design extremes as the seasons are defined in Section 23 05 93.00 22 TESTING, ADJUSTING, AND BALANCING FOR MECHANICAL SYSTEMS. Control set points may be altered to obtain full load performance with advance approval of the Contracting Officer's Technical Representative.[Test cooling equipment and systems with the building fully occupied when performing the Functional Performance Tests during peak cooling season.]

Schedule Seasonal Functional Performance Tests in coordination with the Government.

3.1.5.4.5.3 System Acceptance

Systems may be partially accepted prior to seasonal testing if they comply with all construction contract that can be tested during initial Functional Performance Tests. All Functional Performance Test procedures must be completed prior to full systems acceptance.

3.1.5.4.6 Re-Testing

Re-test only after all deficiencies identified during the origional test have been confirmed by the CxA to be resolved.

3.1.5.4.6.1 100 Percent Sample

Systems or equipment fail if one or more of the test procedures results in discovery of a deficiency and the deficiency cannot be resolved within 5 minutes during the test.

In accordance with the system or equipment sample strategy, re-test the effected systems or equipment to the extent necessary to confirm that the deficiencies have been corrected without negatively impacting the performance of the rest of the system.

3.1.5.4.6.2 Less than 100 Percent Sample

For systems tests with a sample size less than 100 percent, if one or more of the test procedures for an item of equipment or a system results in discovery of a deficiency, regardless of whether the deficiency is corrected during the sample tests, the item of equipment or system fails the test.

In accordance with the system or equipment sample strategy, re-test the effected systems or equipment, and one additional system or epuipment to the extent necessary to confirm that the deficiencies have been corrected without negatively impacting the performance of the rest of the system. If systems or equipment being tested continue to fail the test, add additional systems or equipment to the testing, up to 100 percent testing of systems and equipment, if necessary.

3.1.6 Training Plan

The Contractor must develop training plans which identify all training required by specification sections associated with commissioned systems. Include a matrix listing each training requirement, content of the training, the trainer name, trainer contact information, and schedule and location of training. Submit an electronic copy of the Training Plan to the Commissioning Authority (CxA) and the Government no later than [30][_____] calendar days prior to the associated training.

Document training attendance using training attendance rosters and provide completed attendance rosters to the Commissioning and the Government no later than 7 calendar days following the completion of training for each system to be commissioned. Submit [one][_____] hard copy and an electronic copy..

3.1.7 Systems Manual

Prepare and submit Systems Manual including, for all commissioned systems, the Basis of Design, system single line diagrams, as-built sequences of operation and controls drawings, as-built control setpoints, recommended schedule for sensor and actuator calibration, recommended schedule of maintenance when not in the O&M manuals, recommended re-testing schedule with proposed testing forms, and full equipment warranty information. Update and resubmit the Systems Manual based on any corrective action taken during the warranty period.

Submit Systems Manual no later than 30 calendar days following completion of Functional Performance Tests. Submit an electronic copy.

3.2 COMMISSIONING REPORT

Following the completion of Functional Performance Tests[and Integrated Systems Tests], with the exception of Seasonal Tests, and following the Endurance Tests, the Commissioning Authority (CxA) will prepare a Commissioning Report. The report will include the following:

a. An executive summary describing the overall commissioning process, the results of the commissioning process, any outstanding deficiencies and recommended resolutions, and any seasonal testing that must be scheduled for a later date. The summary will indicate whether the systems meet the requirements of the construction contract and the Owner's Project Requirements.

b. A detail of any deficiencies discovered during the commissioning process and the corrective actions taken in the report. The completed [Building Envelope Inspection Checklists,]Pre-Functional Checklists, Functional Performance Test Checklists, [Integrated Systems Test Checklists,]the Endurance Test Report, the Commissioning Plans, the Issues Log, Training Attendance Rosters, the Design Review Report, the final TAB Report, and any other test reports required by the

certifying organization of the CxA will be included in the report.

c. Following any Seasonal Tests or Post-Construction Activities, the Final Commissioning Report will be updated to reflect any changes and resubmitted by the Commissioning Authority (CxA). File the approved, updated, Final Commissioning Report in the Sustainability eNotebook.

[3.3 POST-CONSTRUCTION SUPPORT

3.3.1 Post-Construction Endurance Test

[Perform an Endurance Test in accordance with the paragraph Endurance Test in Specification Section 23 09 00 INSTRUMENTATION AND CONTROL FOR HVAC once during the peak heating season and once during the peak cooling season during outdoor air condition extremes with the exception that network bandwidth usage measurement and recording is not required. [Use the Temporary Trending Hardware, if necessary, in accordance with Specification Section 23 09 00 INSTRUMENTATION AND CONTROL FOR HVAC.]]

The Commissioning Authority (CxA) will review the trend logs from the Endurance Tests. The Commissioning Authority (CxA) will provide a Post-Construction Trend Log Report that identifies any deficiencies noted in operation and includes a graphical representation of the trends.

3.3.2 Post-Construction Site Visit

The Commissioning Authority (CxA) will visit the building site [concurrent with the 9 month warranty inspection][_____] to inspect building system equipment and review building operation with the building operating/maintenance staff. The Commissioning Authority (CxA) will identify any deficiency of the building systems to operate in accordance with the contract requirements and the Owner's Project Requirements. The Commissioning Authority (CxA) will submit an updated commissioning report and systems manual documenting the results of the post-construction inspection.

]

APPENDIX A - DESIGN PHASE COMMISSIONING PLAN

-- End of Section --

SECTION 01 91 13.00 22

GENERAL COMMISSIONING REQUIREMENTS FOR CONSTRUCTION
03/16

PART 1 GENERAL

1.1 REFERENCES

The publications listed below form a part of this section to the extent referenced. The publications are referred to within the text by the basic designation only.

NATIONAL ENVIRONMENTAL BALANCING BUREAU (NEBB)

NEBB PROCEDURAL STANDARDS	(2005) Procedural Standards for TAB (Testing, Adjusting and Balancing) Environmental Systems

U.S. GREEN BUILDING COUNCIL (USGBC)

LEED GBDC Ref Guide	(2009; R 2010) LEED Reference Guide for Green Building Design, Construction and Major Renovations of Commercial and Institutional Buildings including Core & Shell and K-12 Projects
LEED NC	(2009) Leadership in Energy and Environmental Design(tm) New Construction Rating System

1.2 COMMISSIONING - GENERAL

Commissioning is a quality-oriented, systematic process for achieving, verifying, and documenting that the performance of facilities, systems, and assemblies meet defined objectives and criteria. The commissioning process shall include specific tasks to be conducted during each phase in order to verify that design, construction, documentation, and training provided for this facility meets the Government's project requirements.

Commissioning shall:

a. Verify that applicable equipment and systems are installed according to the contract documents, manufacturer's recommendations, industry accepted minimum standards, and equipment and systems have received adequate operational checkout by the Contractor.

b. Verify and document proper performance of equipment and systems.

c. Verify that O&M documentation prepared for this project is accurate and complete.

d. Verify that all components requiring servicing can be accessed, serviced and removed without disturbing nearby components including ducts, piping, cabling or wiring.

e. Verify that the Government's operating personnel are adequately trained.

It is the intent of the Government that the commissioning process shall comply with the requirements of LEED NC prerequisite EAp1 - Fundamental Commissioning . Refer to LEED GBDC Ref Guide for reference.

The Commissioning Authority (CxA) shall be provided by the Government or its representative and shall direct and coordinate the project commissioning activities.

Commissioning Team: A team comprised of the Commissioning Authority (CxA), Government Project Manager, Designer of Record (DOR), Contractor, subcontractors, and O&M personnel. Commissioning Team members shall have the authority to act on behalf of the entity he or she represents relative to the commissioning process. The Commissioning Team is explicitly organized to implement the commissioning process through collaborative and coordinated action. All team members shall work together to fulfill their contracted responsibilities and meet the objectives of the contract documents.

The commissioning process shall not take away from nor reduce the responsibility of the system designers or Contractor to provide a finished and fully functioning product.

Contractor shall include the cost of his commissioning activities in the total contract price.

Contractor is responsible for providing commissioning support for the equipment he supplies. Include cost of all special tools and instruments required for testing, operating, and maintaining equipment according to these contract documents in the total contract price.

1.3 RELATED UFGS SECTIONS

Refer to the following Sections for system specific commissioning requirements:

a. Section 01 33 29 SUSTAINABILITY REPORTING.

b. Section 22 08 00.00 22 COMMISSIONING OF PLUMBING SYSTEMS for commissioning process activities for plumbing systems.

c. Sections 23 08 00.00 22 COMMISSIONING OF HVAC SYSTEMS and 23 05 93 TESTING, ADJUSTING AND BALANCING FOR HVAC for commissioning process activities for HVAC systems and equipment.

d. Section 26 08 10.00 22 COMMISSIONING OF ELECTRICAL SYSTEMS for commissioning process requirements for the facility electrical power and lighting control systems.

e. The responsible Fire Protection Engineer will function as the commissioning agent for fire suppression and fire alarm and mas notification systems. Refer to Divisions 21 and 28 technical section requirements for commissioning process activities for these activities.

1.4 SUBMITTAL REQUIREMENTS

The CxA will provide Contractor with a specific request for the type of submittal documentation the CxA will require to facilitate the commissioning work. These requests will be integrated into the normal

submittal process and protocol of the construction team. At minimum, the request will include the manufacturer and model number, the manufacturer's printed installation and detailed startup procedures, full sequences of operation, O&M data, and performance data, any performance test procedures, control drawings and details of manufacturer's tests and calibration procedures. In addition, the installation and checkout materials that are actually shipped with/inside the equipment and the actual field checkout sheet forms to be used by the factory or field technicians shall be submitted to the CxA. All documentation requested by the CxA will be included by the Contractor in the O&M manual.

The CxA will review and approve submittals related to the commissioned equipment for conformance to the contract documents as it relates to the commissioning process, to the performance of the equipment and adequacy of information for developing test procedures. This review is intended primarily to aid in the development of performance procedures and only secondarily to verify compliance with equipment specifications. The CxA will notify the Government of items missing or areas that are not in conformance with contract documents and which require resubmission.

These submittals to the CxA do not constitute compliance for O&M manual documentation. The O&M manuals are the responsibility of the contractor, though the CxA will review and approve them for adequacy with respect to the commissioning review.

1.5 DEFINITIONS

Acceptance: Acceptance is a formal action, to declare that some aspect of the project meets defined requirements, thus permitting subsequent activities to proceed.

Acceptance Phase Commissioning: Commissioning tasks executed after the construction has been completed, all Site Observations and Static Tests have been completed and all Pre-Functional Testing has been completed and accepted. The main commissioning activities performed during this phase are verification that the installed systems are functional as verified by conducting Functional Performance tests and Government Training.

Basis of Design (BOD): The Engineer's Basis of Design is comprised of two components: the Design Criteria and the Design Narrative, these documents record the concepts, calculations, decisions, and product selections used to meet the Owner's Project Requirements (OPR) and to satisfy applicable regulatory requirements, standards, and guidelines. See also: Design Narrative.

Benchmarks: Benchmarks are the comparison of a building's water and energy usage to other similar buildings and to the building itself.

Building Commissioning: Commissioning of building systems such as Building Envelope, HVAC, Electrical, Special Electrical Fire Alarm, Security & Communications, Plumbing and Fire Protection.

Calibrate: The act of comparing an instrument of unknown accuracy with a standard of known accuracy to detect, correlate, report, or eliminate by adjustment any variation in the accuracy of the tested instrument.

Checklists: Lists of data or inspections that should be verified to ensure proper system or component installation, operation and function. Verification checklists are developed and used during all phases of the

commissioning process to verify that the Owner's Project Requirements (OPR) are being achieved.

Commissioning Authority (CxA): The entity, who plans, schedules and coordinates the commissioning team to implement the Commissioning Process. Where CxA is used it means the Commissioning Authority, members of his staff or appointed members of the commissioning team. The qualifications for the CxA shall comply with the requirements of LEED NC prerequisite EAp1 - Fundamental Commissioning.

Commissioning Issue: Any condition that adversely affects the commissionability, operability, maintainability or functionality of a system, equipment or component. Any condition that is in conflict with the Contract Documents and/or performance requirements of the installed systems and components. Can also be referred to as "Deficiency".

Commissioning Observation: An issue that does not conform to the project OPR, contract documents or standard industry best practices.

Commissioning Plan: A document that outlines the scope and defines responsibilities, processes, schedules, and the documentation requirements of the Commissioning Process.

Commissioning Process: A quality focused process for enhancing the delivery of a project. The process focuses upon verifying and documenting that the facility and all of its systems, components, and assemblies are planned, designed, installed, tested, can be operated, and maintained to meet the Owner's Project Requirements.

Commissioning Report (Cx): The final document which presents the commissioning process results for the project. Cx reports include an executive summary, the commissioning plan, issue log, correspondence, and all appropriate check sheets and test forms.

Commissioning Design Review: A commissioning design review is a collaborative review of the design professionals design documents for items pertaining to the following: owner's project requirements; basis of design; operability and maintainability (O&M) including documentation; functionality; training; energy efficiency, control systems' sequence of operations including building automation system features; commissioning specifications and the ability to functionally test the systems.

Commissioning Team: A team comprised of the Commissioning Authority (CxA), Government Project Manager, DOR, Contractor, and O&M personnel. Commissioning Team members shall have the authority to act on behalf of the entity he or she represents relative to the commissioning process. The Commissioning Team is explicitly organized to implement the commissioning process through collaborative and coordinated action.

Contractor: "Contractor" includes all subcontractors, vendors, etc. that are responsible to the Contractor.

Construction Phase Commissioning: All commissioning efforts executed during the construction process after the design phase and prior to the Acceptance Phase Commissioning.

Contract Documents: The documents binding on parties involved in the construction of this project (drawings, specifications, change orders, amendments, contracts, commissioning plan, etc.

Corrective Action: The implementation of actions that correct a tested or observed commissioning issue.

Data Logging: The monitoring and recording of temperature, flow, current, status, pressure, etc. of equipment using stand-alone data recorders.

Deferred System Functional Test: Tests that cannot be completed at the end of the acceptance phase due to ambient conditions, schedule issues or other conditions preventing testing during the normal acceptance testing period.

Design Criteria: A listing of the projects design requirements, including its source. These are used during the design process to show the design element meets the OPR.

Design Intent: The overall term that includes the OPR and the BOD. It is a detailed explanation of the ideas, concepts, and criteria that are defined by the Government to be important. The design intent documents are utilized to provide a written record of these ideas, concepts and criteria.

Design Phase Commissioning: All commissioning tasks executed during the design phase of the project.

Functional Performance Test (FPT): Functional performance tests are tests that are intended to prove functionality of the component or system using direct observation and monitoring methods. Functional Performance Tests include static testing, dynamic testing, failure modes, and integrated systems testing. FPT tests are done after all Pre-Functional Checklists are complete. Also called Systems Functional Performance Test, Functional Test, or Integrated Systems Test.

Functional Test Procedure: A written protocol that defines methods, steps, personnel, and acceptance criteria for tests conducted on components, equipment, assemblies, systems, and interfaces among systems.

Industry Accepted Best Practice: A design component or construction process that has achieved industry consensus for quality performance and functionality.

Installation Verification: Observations or inspections that confirm the system or component has been installed in accordance with the contract documents and to industry accepted best practices.

Issues Log: A formal and ongoing record of issues, observations, problems or concerns - and their resolution - that have been raised by members of the commissioning team during the course of the commissioning process.

Manual Test: Testing using hand-held instruments, immediate control system readouts or direct observation to verify performance (contrasted to analyzing monitored data taken over time to make the 'observation').

Operations and Maintenance (O&M) Manual: O&M manuals describe key components of each system or piece of equipment and explain how they should be operated and maintained for optimum performance.

Owner's Project Requirements (OPR): A written document that details the project requirements and the expectations of how the building and its systems will be used and operated. These include project goals, measurable

performance criteria, cost considerations, benchmarks, success criteria, and supporting information.

Precision: The ability of an instrument to produce repeatable readings of the same quantity under the same conditions. The precision of an instrument refers to its ability to produce a tightly grouped set of values around the mean value of the measured quantity.

Pre-Design Phase Commissioning: Commissioning tasks performed prior to the commencement of design activities that includes project programming and the development of the commissioning process for the project.

Pre-Functional Checklist: A form used by the contractor to verify that appropriate components are onsite, correctly installed, set up, calibrated, functional and ready for functional testing.

Sampling: Performing observation, review, testing or other verification on only a fraction of the total number of identical or near identical pieces of equipment, drawings, events, etc. Sampling techniques include random statistical sampling and less formal professional judgment methods.

Site Observation Visit: On-site inspections and observations made by the Commissioning Authority for the purpose of verifying component, equipment, and system installation, to observe contractor testing, equipment start-up procedures, or other purposes.

Site Observation Reports: Reports of site inspections and observations made by the Commissioning Authority. Observation reports are intended to provide early indication of an installation issue which will need correction or analysis.

Start Up Tests: Tests that validate the component or system is ready for automatic operation in accordance with the manufacturers' requirements.

Static Tests: Tests or inspections that validate a specified static condition such as pressure testing. Static tests may be specification or code initiated.

Systems Manual: A system-focused composite manual organized by system which contains the information needed to optimally operate the building systems. Much of the Systems Manual is not found in traditional vendor O&M Manuals. For reference, ASHRAE includes all maintenance and design documentation in their definition of Systems Manual.

Test Procedure: A written protocol that defines methods, personnel, and expectations for tests conducted on components, equipment, assemblies, systems, and interfaces among systems.

Testing: The use of specialized and calibrated instruments to measure parameters such as: temperature, pressure, vapor flow, air flow, fluid flow, rotational speed, electrical characteristics, velocity, and other data in order to determine performance, operation, or function.

Testing, Adjusting, and Balancing (TAB): A systematic process or service applied to heating, ventilating and air-conditioning (HVAC) systems and other environmental systems to achieve and document air and hydronic flow rates. The standards and procedures for providing these services are referred to as "Testing, Adjusting, and Balancing" and are described in NEBB PROCEDURAL STANDARDS.

Thermal Scans: Thermographic pictures taken with an Infrared Thermographic Camera. Thermographic pictures show the relative temperatures of objects and surfaces and are used to identify leaks, thermal bridging, thermal intrusion, electrical overload conditions, moisture containment, and insulation failure.

Training Plan: A written document that details, in outline form, the expectations of the operator training. Training agendas should include instruction on how to obtain service, operate, startup, shutdown and maintain all systems and components of the project.

Unresolved Commissioning Issue: Any Commissioning Issue that, at the time that the Final Report or the Amended Final Report is issued that has not been either resolved by the Contractor or accepted by the Government.

Validation: The process by which work is verified as complete and operating correctly:

a. First party validation occurs when a firm or individual verifying the task is the same firm or individual performing the task.

b. Second party validation occurs when the firm or individual verifying the task is under the control of the firm performing the task or has other possibilities of financial conflicts of interest in the resolution (Architects, Designers, General Contractors and Third Tier Subcontractors or Vendors).

c. Third party validation occurs when the firm verifying the task is not associated with or under control of the firm performing or designing the task.

Verification: The process by which specific documents, components, equipment, assemblies, systems, and interfaces among systems are confirmed to comply with the criteria described in the Contract Documents and Owner's Project Requirements.

Warranty Period: Period of time in which the contractor is responsible for equipment repairs following turnover to the Government. The warranty period is defined in the construction contract.

Warranty Phase Commissioning: Commissioning efforts executed after a project has been completed and accepted by the Government. Warranty Phase Commissioning includes follow-up on verification of system performance, measurement and verification tasks and assistance in identifying warranty issues and enforcing warranty provisions of the construction contract.

Warranty Visit: A commissioning meeting and site review where all outstanding warranty issues and deferred testing is reviewed and discussed.

1.6 SYSTEMS TO BE COMMISSIONED

Commissioning of a system or systems specified for this project is part of the construction process. Documentation and testing of these systems, as well as training of the Government's personnel, is required in cooperation with the Government and the Commissioning Authority.

1.6.1 Building Envelope (Division 07 and Division 08)

The following systems shall be commissioned as part of this project:

a. Roofs: Asphalt shingles, slate shingles, wood shingles, clay roof tiles, built-up bituminous, modified bituminous, EPDM, PVC, fluid-applied, sprayed polyurethane, flashing & sheet metal, metal roofing, roof specialties, and roof accessories.

b. Exterior Insulation and Finish Systems (EIFS).

c. Curtain Wall Systems: Mullions, glazing, and sealing

d. Exterior Doors: Revolving, glass leaf, emergency exit, and service

e. Exterior Windows: Aluminum, steel, glazing, storm

f. Louvers and Vents

g. Sealants: Caulking, mechanical seals, and wind and vapor barriers

h. Air Barrier Systems

i. Vapor Barrier Systems

1.6.2 Fire Suppression (Division 21)

The following systems shall be commissioned as part of this project:

a. Fire Protection Systems: Fire pump, jockey pump, fire pump automatic transfer switch/controller, Wet-pipe fire suppression, dry-pipe fire suppression, pre-action fire suppression, dry system air compressors and motors, clean agent fire suppression, and foam fire suppression.

b. Smoke Control Systems: Smoke evacuation, smoke control, and stair pressurization.

1.6.3 Plumbing (Division 22)

Provide Plumbing commissioning as required in Section 22 08 00.00 22 COMMISSIONING OF PLUMBING SYSTEMS.

1.6.4 HVAC (Division 23)

Provide HVAC commissioning as required in Section 23 08 00.00 22 COMMISSIONING OF HVAC SYSTEMS.

1.6.5 Electrical (Divisions 26 and 33)

Provide electrical commissioning as required in Section 26 08 10.00 22 COMMISSIONING OF ELECTRICAL SYSTEMS.

1.6.6 Communications (Divisions 27 and 33)

Provide Communications commissioning as required in Section 26 08 10.00 22 COMMISSIONING OF ELECTRICAL SYSTEMS.

1.6.7 Electronic Safety and Security (Division 28)

The following systems shall be commissioned as part of this project:

a. Fire Detection and Alarm Systems: Master panel and software, addressable units - i.e. pull stations, flow detectors, heat detectors, etc., controls and alarm functions, horns/bells/door releases and other output devices, and fire command center functions - mechanical systems shutdowns.

b. Intrusion Detection Systems

c. Access Control Systems

d. Video Surveillance Systems / Closed Circuit Control Systems

e. Radio Communications Systems

f. Chemical, Biological, Radiological, Nuclear (CRRNE) Detection Systems

1.6.8 Site Utility Systems

The following systems shall be commissioned as part of this project:

a. Sanitary Sewage Lift Stations: Lift station sump or tank level controls, pump alternator, alarms and alarm panel, pumps and motors.

b. Steam Condensate Pump Stations: Condensate receivers and transfer pumps, motors, controls, pump alternator, alarms and instrumentation, and safeties.

c. Storm Drainage Pump Systems: Sump level controls, pump alternator, alarms and alarm panel, pumps and motors.

1.6.9 Other Systems

The following systems shall be commissioned as part of this project:

a. Solar Systems: Solar water heaters, transpired solar collectors, and Photovoltaic.

b. Renewable Energy Systems: Wind turbines, waste-to-energy, and geo-thermal.

1.7 COMMISSIONING PLAN

The CxA will develop the Commissioning Plan which shall be coordinated with and incorporated into the Contractor's project schedule, approved by the Government. The Commissioning Plan outlines the scope and defines responsibilities, processes, schedules, and the documentation requirements of the commissioning process. The Commissioning Plan shall be initially developed during the design phase of the project and shall be refined, with the assistance and input of the Contractor, throughout construction. The Contractor, as an integral member of the Commissioning Team, shall support the CxA and the Commissioning Team throughout the contract. The components of the Commissioning Plan are outlined in this section and other technical sections in the contract documents.

The Commissioning Plan shall naturally evolve over the course of construction. The CxA shall add, modify and refine the commissioning procedures, as approved by the Government, to suit field conditions and actual manufacturer's equipment, incorporate test data and procedure results, and provide detailed scheduling for all commissioning tasks.

Contractor should reasonably expect modifications to the Commissioning Plan throughout construction.

1.8 RESPONSIBILITIES

The general responsibilities of various parties in the commissioning process are provided in this Article. The specific responsibilities are in the technical specification sections.

The Contractor shall provide all equipment, materials, and labor to inspect, check-out, start-up and test equipment and systems, except for specified testing with portable data-loggers, which shall be supplied and installed by the CxA, as required.

1.8.1 Commissioning Authority (CxA)

Coordinates and directs the commissioning activities in a logical, sequential and efficient manner using consistent protocols and forms, centralized documentation, clear and regular communications and consultations with all necessary parties, frequently updated timelines and schedules and technical expertise.

References herein to the "CxA" shall be inferred to mean "CxA or his designated representative".

1.8.1.1 Construction Phase

a. Coordinate the commissioning work and with Commissioning Team members, help integrate commissioning activities into the master schedule.

b. Revise the Construction Phase Commissioning Plan as necessary.

c. Plan and conduct commissioning scoping meetings and other commissioning meetings.

d. Request and review additional information required to perform commissioning tasks, including O&M materials, manufacturer's supplemental instructions, and contractor startup and checkout procedures.

e. Write and distribute construction checklists and functional test procedures. Prepare and maintain completed construction checklist log. Obtain the completed construction checklists from the Contractor and verify and approve by selected site observation and spot checking of a random number of typical installations.

f. Before startup, gather and review the current control sequences and interlocks and work with Contractor and DOR until sufficient clarity has been obtained, in writing, to be able to write the detailed, functional testing procedures.

g. Review and approve normal Contractor submittals applicable to systems being commissioned for compliance with commissioning needs, concurrent with the DOR reviews.

h. Develop an enhanced startup and initial systems checkout plan with Contractor.

i. Perform site visits as necessary to observe component and system

installations. Attend selected planning and job-site meetings to ensure that commissioning activities are included in job progress meetings and to obtain information on construction progress. Review construction meeting minutes for revisions/substitutions relating to the commissioning process. Assist in resolving any discrepancies.

j. Verify the execution of commissioning process activities using random sampling. Verification will include, but is not limited to, equipment submittals, construction checklists, pre-functional checklists, start-up reports, training, operating and maintenance data, functional performance tests, and test reports to verify compliance with the OPR. When a random sample does not meet the requirement, report the failure in the "Issues Log."

k. Review TAB execution plan for HVAC.

l. Oversee sufficient testing of the control system and approve it to be used for TAB, before TAB is executed.

m. Recommend approval of air and water systems balancing by spot testing, by reviewing completed reports and by selected site observation.

n. Coordinate the development of a systems manual.

1.8.1.2 Acceptance Phase

a. Witness HVAC piping flushing and test procedures, to ensure that proper procedures were followed. Document this testing and include the documentation in O&M manuals. Notify PM/CM of any deficiencies in results or procedures.

b. Witness ductwork cleaning and testing procedures, to ensure that proper procedures were followed. Document this testing and include the documentation in O&M manuals. Notify PM/CM of any deficiencies in results or procedures.

c. Recommend approval of systems startup by reviewing startup reports and by selected site observation.

d. With assistance as needed from installing contractors, witness the functional performance verification testing (PVT) of equipment and systems, performed by the Contractor and sub-contractors, including energy management control system trending, stand-alone data logger monitoring or manual performance testing, as required. Coordinate, witness, verify and document retesting as necessary until satisfactory performance is achieved. Coordinate and supervise required 2nd season testing and corrections to deficiencies.

e. Analyze any PVT trend logs and monitoring data to verify performance.

f. Maintain a master Issues Log and a separate testing record. Provide the PM/CM with written progress reports and test results with recommended actions.

g. Review and approve the training materials prepared by the Contractor for the Government's operating and maintenance personnel.

h. Review and evaluate the Operation and Maintenance (O&M) manuals submitted by the Contractor for completeness.

i. Provide a final commissioning report.

j. When necessary to solve a specific issue, prepare a standard trend logging package of primary parameters that will allow troubleshooting of improper system operations and solution recommendation.

1.8.1.3 Warranty Phase

a. Coordinate and supervise required seasonal or deferred testing and deficiency corrections.

b. Return to the site at 10 months into the 12 month warranty period and review with facility staff the current building operation and the condition of outstanding issues related to the original and seasonal commissioning. Interview facility staff and identify problems or concerns they have operating the building as originally intended. Make suggestions for improvements and for recording these changes in the O&M manuals. Identify areas that may come under warranty or under the original construction contract. Assist facility staff in developing reports, documents and requests for services to remedy outstanding problems.

c. Attend lessons learned sessions as required.

1.8.2 Government Project Manager (PM/CM)

1.8.2.1 Construction Phase

a. Attend the commissioning scoping meetings and selected commissioning team meetings.

b. Perform normal review of contract submittals, construction observation, as-built drawing preparation, O&M manual preparation, etc., as required.

c. Provide any design narrative documentation requested by the CxA.

d. Coordinate resolution of system design and construction deficiencies identified during commissioning, according to the contract documents.

e. Facilitate the coordination of the commissioning work by the CxA and the DOR, and with the assistance of the Contractor, ensure that commissioning activities are being scheduled into the master schedule.

f. Review and approve the final commissioning plan.

g. Furnish a copy of all construction documents, addenda, change orders, and shop drawing submittals related to commissioned equipment to the CxA.

h. Review and approve the functional performance test procedures submitted by the CxA, prior to testing.

1.8.2.2 Acceptance Phase

a. Prepare and submit final as-built design intent documentation for inclusion in the O&M manuals. Review and approve the O&M manuals.

b. When necessary, observe and witness startup and performance verification testing (PVT) of selected equipment.

c. Review commissioning progress and deficiency reports.

d. Coordinate the resolution of non-compliance and design deficiencies identified in all phases of commissioning.

e. Provide the Government's OPR documentation to the CxA for information and use.

f. Provide the BoD documents, prepared by DOR and approved by Government, to the CxA for use in developing the commissioning plan and systems manual.

g. Review and approve the Contractor's Training Plan for operations and maintenance personnel.

h. Coordinate and arrange for facility operation and maintenance personnel to attend various field commissioning activities, including field and classroom training sessions.

i. Provide final approval for the completion of the commissioning work.

1.8.2.3 Warranty Phase

a. Assist the CxA as necessary in the seasonal or deferred testing and deficiency corrections required by the specifications.

b. Attend lessons learned session.

1.8.3 Designer of Record (DOR)

1.8.3.1 Construction Phase

a. Perform normal submittal review, construction observation, as-built drawing preparation, etc., as required. Onsite observation should be completed just prior to system startup.

b. Provide design narratives and automatic controls sequences of operations documentation requested by the CxA. Assist (along with the Contractor) in clarifying the operation and control of commissioned equipment in areas where the specifications, control drawings or equipment documentation is not sufficient for writing detailed testing procedures.

c. Attend commissioning scoping meetings and other selected commissioning team meetings.

d. Participate in the resolution of system deficiencies identified during commissioning, according to the contract documents.

e. Prepare and submit the final as-built design intent and operating parameters documentation for inclusion in the O&M manuals. Review and approve the O&M manuals.

f. From the Contractor's red-line drawings, edit and update one-line diagrams developed as part of the design narrative documentation and those provided by the vendor as shop drawings for the domestic water;

HVAC systems; supply, return and exhaust air systems and emergency power system.

g. Review and approve the CxA's construction checklist templates for major pieces of equipment for sufficiency prior to their use.

h. Review and approve the CxA's functional performance test procedure forms for major pieces of equipment for sufficiency prior to their use.

1.8.3.2 Acceptance Phase

a. Provide a presentation at one of the training sessions for the Government's personnel.

b. Witness testing of selected pieces of equipment and systems.

1.8.3.3 Warranty Phase

a. During the warranty period, participate in the resolution of non-compliance, non-conformance and design deficiencies identified during commissioning.

b. Attend lessons learned sessions, as required.

1.8.4 Contractor

Contractor shall assign representatives with expertise and authority to act on their behalf and shall schedule them to participate in and perform commissioning process activities including, but not limited to, the following:

The CxA will provide sufficient notice to the Contractor in order to schedule commissioning activities. All parties will address scheduling problems and make necessary notifications in a timely manner in order to expedite the commissioning process.

1.8.4.1 Construction Phase

a. Facilitate the coordination of the commissioning and incorporate commissioning activities (the Commissioning Plan) into the Overall Project Schedule.

b. Submit detailed startup procedures for equipment and systems for approval.

c. Ensure that all commissioning responsibilities are executed according to the contract documents and the commissioning plan.

d. Provide copies of all submittals as required in Section 01 33 29 SUSTAINABILITY REPORTING, including all changes thereto.

e. Attend and participate in commissioning team meetings.

f. No later than 60 days prior to startup of the first piece of major equipment, meet with the commissioning team to finalize the detailed commissioning procedures and schedule.

g. Review and accept the construction checklists, pre-functional checklists, and functional performance test procedures provided by the

CxA.

h. Complete paper copies of construction checklists and pre-functional checklists as work is completed. Provide these completed checklists to the CxA, with copies to the Government and the DOR, on a weekly basis or as otherwise required.

i. Provide all requested submittal data, including detailed startup procedures and specific responsibilities of the Government to keep warranties in force.

j. Analyze specified products and verify that the Government and DOR have specified the newest, most current equipment reasonable for this project's scope and budget.

k. Provide requested information to the CxA regarding equipment sequence of operations and testing procedures.

l. Review construction checklists and test procedures for equipment installed by factory representatives.

1.8.4.2 Acceptance Phase

a. Provide the training of Government personnel.

b. Accomplish the commissioning functional performance test procedures. Provide for retesting as required until the equipment and system have been adjusted for provide satisfactory test results.

c. Evaluate performance deficiencies identified in test reports and, in collaboration with entity responsible for system and equipment installation, recommend corrective action.

d. Cooperate with the CxA for resolution of issues recorded in the "Commissioning Issues Log".

e. Prepare O&M manuals, according to the contract documents, including clarifying and updating the original sequences of operation to as-built/as-tested conditions.

1.8.4.3 Warranty Phase

a. Provide assistance for seasonal or deferred performance testing, observed and documented by the CxA, according to the specifications.

b. Correct deficiencies and make necessary adjustments to O&M manuals and as-built drawings for applicable issues identified in any seasonal testing.

c. Perform all guarantee work for materials furnished under the contract for the time specified in the contract, including all warranties and curing all latent defects within the time period provided in the contract.

PART 2 PRODUCTS

2.1 TEST EQUIPMENT

All standard testing equipment required to perform startup and initial

checkout and required performance testing shall be provided by the Contractor for the equipment being tested. This includes, but is not limited to, two-way radios, meters, and data recorders. Data recorders may be provided by the CxA at the option of the Government.

Special equipment, tools, and instruments required for testing equipment according to these contract documents shall be included in the contractor's base bid price and shall be turned over to the Government at Project close-out.

All testing equipment shall be of sufficient quality and accuracy to test and/or measure system performance within the tolerances specified in the specifications. If not otherwise noted, the following minimum requirements apply: Temperature sensors and digital thermometers shall have a certified calibration to NIST traceable standards within the past year to an accuracy of 0.5 degree F and a resolution of + or - 0.1 degree F. Pressure sensors shall have an accuracy of + or - 2.0 percent of the value range being measured (not full range of meter) and have been calibrated within the last year. All equipment shall be calibrated according to the manufacturer's recommended intervals and when dropped or damaged. Calibration tags shall be affixed or certificates readily available.

PART 3 EXECUTION

3.1 START-UP, PRE-FUNCTIONAL CHECKLISTS AND INITIAL CHECKOUT

The following procedures apply to all equipment/systems to be commissioned.

General: Pre-functional checklists are intended to verify that the equipment and systems are fully connected and operational and to ensure that functional performance testing (in-depth system checkout) may proceed without unnecessary delays. The pre-functional checklists for a given system must be successfully completed and approved prior to startup and formal performance testing of equipment or subsystems of the given system.

Startup and Checkout Plan: The CxA will assist the project commissioning team members responsible for startup of any equipment. The primary role of the CxA in this process is to ensure that there is written documentation that each of the manufacturer-recommended procedures has been completed. The CxA shall provide pre-functional checklists and startup shall be identified in the commissioning scoping meeting and on the checklist forms.

a. The pre-functional checklists shall be provided at the initial commissioning meetings. These checklists indicate required procedures to be executed as part of startup and initial checkout of the systems and the party responsible for their execution.

b. Contractor shall determine the trade or trades responsible for executing and documenting each of the line item tasks and shall transmit the checklists to the responsible party.

c. Contractor shall develop the full startup plan by combining the manufacturer's detailed startup and checkout procedures and the pre-functional checklists.

d. Contractor shall submit the full startup plan to the CxA and the Government for review and approval.

e. The CxA will review and approve the procedures and the documentation format for reporting, and will return the procedures and the documentation format to the Contractor.

f. Contractor will implement the full startup plan.

3.1.1 Sensor and Actuator Calibration

All field-installed temperature, relative humidity, CO, CO2, refrigerant, O2, pressure sensors and gages, and all actuators (dampers and valves) on all equipment shall be calibrated. Verify that the installed locations of these devices are appropriate and away from any external causes, which might contribute to erratic operation. Submit to the CxA the calibration methods and results. All test instruments shall have had a certified calibration within the last six months to NIST traceable standards, and comply with all local, state and federal requirements and certifications, as required. Sensors installed in the equipment/unit at the factory with calibration certification provided need not be field calibrated. Provide bench testing as required at the direction of the CxA.

a. Sensor Calibration Methods:

1. All Sensors: Verify that all sensor locations are appropriate and away from causes of erratic operation. Verify that sensors with shielded cable are grounded only at one end. For sensor pairs that are used to determine a temperature or pressure difference, make sure they are reading within 0.2°F of each other for temperature and within a tolerance equal to 2 percent of the reading, of each other, for pressure. Tolerances for critical applications may be tighter.

2. Sensors without Transmitters: Make a reading with a calibrated test instrument within 6 inches of the site sensor. Verify that the sensor reading (via the permanent thermostat, gage or building automation system (BAS)) is within the tolerances in the table below of the instrument-measured value. If not, install offset in BAS, calibrate or replace sensor.

3. Sensors with Transmitters: Disconnect sensor. Connect a signal generator in place of sensor. Connect ammeter in series between transmitter and BAS control panel. Using manufacturer's resistance-temperature data, simulate minimum desired temperature. Adjust transmitter potentiometer zero until 4 mA is read by the ammeter. Repeat for the maximum temperature matching 20 mA to the potentiometer span or maximum and verify at the BAS. Record all values and recalibrate controller as necessary to conform with specified control ramps, reset schedules, proportional relationship, reset relationship and P/I reaction. Reconnect sensor. Make a reading with a calibrated test instrument within 6 inches of the site sensor. Verify that the sensor reading (via the permanent thermostat, gage or building automation system (BAS)) is within the tolerances in the table below of the instrument-measured value. If not, replace sensor and repeat. For pressure sensors, perform a similar process with a suitable signal generator.

4. Critical Applications-- For critical applications (process, manufacturing, etc.) more rigorous calibration techniques may be

required for selected sensors. Describe any such methods used on an attached sheet.

b. Tolerances, Standard Applications:

1.	Cooling coil, chilled and condenser water temps	+/- 0.4 F
2.	AHU wet bulb or dew point	+/- 2.0 F
3.	Hot water coil and boiler water temp	+/- 1.5 F
4.	Outside air, space air, duct air temps	+/- 0.4 F
5.	Watt-hour, voltage & amperage	+/- 1% of design
6.	Pressures, air, water & gas	+/- 3% of design
7.	Flow rates, air	+/- 10% of design
8.	Flow rates, water	+/- 4% of design
9.	Relative humidity	+/- 4% of design
10.	Combustion flue temps	+/- 5.0 F
11.	Oxygen or CO2 monitor	+/- 0.1% pts
12.	CO monitor	+/- 0.01% pts
13.	Natural gas and oil flow rate	+/- 1% of design
14.	Steam flow rate	+/- 3% of design
15.	Barometric pressure	+/- 0.1 inch Hg

c. Valve and Damper Stroke Setup and Check EMS Readout: For all valve and damper actuator positions checked, verify the actual position against the BAS readout.

1. Set pumps or fans to normal operating mode. Command valve or damper closed, visually verify that valve or damper is closed and adjust output zero signal as required. Command valve or damper open, verify position is full open and adjust output signal as required. Command valve or damper to a few intermediate positions. If actual valve or damper position doesn't reasonably correspond, replace actuator.

2. Closure for heating coil valves (NO): Set heating setpoint 20°F above room temperature. Observe valve open. Remove control power from the valve and verify that the valve stem and actuator position do not change. Restore to normal. Set heating setpoint to 20°F below room temperature. Observe the valve close.

3. Closure for cooling coil valves (NC): Set cooling setpoint 20°F above room temperature. Observe the valve close. Remove control air or power from the valve and verify that the valve stem and actuator position do not change. Restore to normal. Set cooling setpoint to 20°F below room temperature. Observe valve open. For pneumatics, by override in the EMS, increase pressure to valve by

3 psi (do not exceed actuator pressure rating) and verify valve stem and actuator position does not change. Restore to normal.

3.1.2 Execution of Pre-Functional Checklists and Startup

a. Four weeks prior to the scheduled startup, Contractor shall coordinate startup and checkout with the Commissioning Team. The execution of the pre-functional checklists, startup, and checkout shall be directed and performed by the Contractor. Signatures are required for verification of completion of the work. Submit for approval by the Government and CxA.

b. Government and DOR, as necessary, shall at minimum observe the procedures for each piece of primary equipment. CxA will observe the functional performance testing of sufficient numbers of equipment or systems based on the project's sampling strategy for commissioning.

c. For lower-level components of equipment, (e.g., sensors, controllers) the CxA shall observe a sampling of the startup procedures.

d. Only individuals of the Contractor (technicians, engineers, tradesmen, vendors, etc.) who have direct knowledge and witnessed that a line item task on the construction checklist was actually performed shall check off that item. It is not acceptable for witnessing supervisors to fill out these forms.

3.1.3 Deficiencies, Non-Conformance, and Approval in Checklists and Startup

a. Contractor shall clearly list on an attached sheet any outstanding items of the initial startup and construction checklist procedures that were not completed successfully. The form and any outstanding deficiencies shall be provided to the CxA within two days of test completion.

b. The CxA will review the report and issue either a non-compliance report or an approval form to the Contractor. The Contractor shall correct all areas that are deficient or incomplete in the checklists and tests in a timely manner, shall notify members of the Commissioning Team as soon as outstanding items have been corrected, and resubmit an updated startup report with a Statement of Correction on the original non-compliance report. When satisfactorily completed, the CxA will recommend approval of the execution of the checklists and startup of each system.

c. Items left incomplete, which later cause deficiencies or delays during performance may result in back charges to the Contractor.

3.2 PHASED COMMISSIONING

The project requires startup, TAB and performance testing to be executed in phases. Phasing shall be coordinated with the Commissioning Team and be reflected in the overall project schedule and commissioning schedule by the contractor. Final performance testing of all systems will be as required by the phasing plan. The performance testing of the "systems as a whole" will be performed before final turnover of the entire project.

3.3 FUNCTIONAL PERFORMANCE TESTING

Requirements: The functional performance testing shall demonstrate that

each system is operating according to the documented design intent and contract documents. Functional performance testing facilitates bringing the systems from a state of individual substantial completion to full dynamic operation. Additionally, during the testing process, areas of deficient performance shall be identified and corrected, improving the operation and functioning of the systems.

Test Equipment: Refer to Part 2 of this Section.

Problem Solving: The burden of responsibility to solve, correct, and retest malfunctions/failures is with the Contractor, with approval of the CxA and the Government as required.

3.3.1 Coordination and Scheduling

Contractor shall provide sufficient notice regarding the completion schedule for the installation of equipment "ready for inspection" dates, to allow for the completion of the pre-functional checklists and startup of all equipment and systems, and to allow the functional performance testing to be scheduled. The Commissioning Team shall oversee, witness, and document the performance of all equipment and systems. The CxA, in association with the Contractor and facility staff as needed shall execute the tests. Functional performance testing shall be conducted after the pre-functional checklists and startup has been satisfactorily completed. The control system shall be sufficiently tested and approved by the CxA before it is used to verify performance of other components or systems. The air balancing and water balancing shall be completed before performance testing of air or water-related equipment or systems. Testing proceeds from components to sub-systems to systems. When the proper performance of all interacting individual systems has been achieved, the interface or coordinated responses between systems shall be checked.

3.3.2 Development of Functional Test Procedures

Before the functional test procedures are finalized, the Contractor shall provide to the CxA all requested documentation and a current list of changes affecting equipment or systems, including an updated points list, program code, control sequences, and testing parameters. Using the testing parameters and requirements in the technical specifications, the CxA and the DOR shall update/develop specific test procedures and forms to verify and document proper operation of each piece of equipment and system. Contractor shall provide assistance to the CxA in developing the final functional test procedures. Prior to finalization, the CxA and the Government shall review and concur with the functional test procedures.

Test Methods:

a. Performance testing and verification may be achieved by manual testing or by monitoring the performance and analyzing the results using the control system's trend log capabilities or by stand-alone data loggers. The CxA may substitute specified methods or require an additional method to be executed other than what was specified, with the approval of the DOR and the Government. The CxA will determine which method is most appropriate for tests that do not have a specified method.

b. Simulated Conditions: Shall be allowed, though timing the testing to experience actual conditions is encouraged wherever practical.

c. Overridden Values: Overriding sensor values to simulate a condition, such as overriding the outside air temperature reading in a control system to be something other than it really is, is acceptable.

d. Simulated Signals: Using a signal generator which creates a simulated signal to test and calibrate transducers and DDC constants is generally recommended over using the sensor to act as the signal generator via simulated conditions or overridden values.

e. Altering Setpoints: Rather than overriding sensor values, and when simulating conditions is difficult, altering setpoints to test a sequence is acceptable.

f. Indirect Indicators: Relying on indirect indicators for responses or performance shall be allowed only after visually and directly verifying and documenting, over the range of the test parameters, that the indirect readings through the control system represent actual conditions and responses.

g. Setup: Each performance test shall be performed under conditions that simulate actual conditions as closely as is practically possible. The Contractor shall assist the CxA in executing the test by providing all necessary materials, system modifications, etc., to produce the necessary flows, pressures and temperatures necessary to execute the test according to the specified conditions. At completion of the test, the Contractor shall return all affected equipment and systems to their approved operating settings.

3.4 DOCUMENTATION, NON-CONFORMANCE, AND APPROVAL OF TESTS

3.4.1 Documentation

The CxA shall witness and verify/pre-approve the documentation of the results of all performance tests. The CxA shall complete all documentation for performance testing.

3.4.2 Non-Conformance

Corrections of minor deficiencies identified may be made during the tests at the discretion of the CxA. In such cases the deficiency and resolution will be documented on the procedure form or on an attached sheet.

As tests progress and a deficiency is identified, the CxA shall discuss the issue with the Contractor, DOR and the Government.

a. When there is no dispute on the deficiency and the Contractor accepts responsibility to correct it:

   1. The CxA will document the deficiency and the Contractor's response and intentions. After the day's work, the CxA will submit the non-compliance reports to the Government and the Contractor. The Contractor shall correct the deficiency, sign the statement of correction certifying that the equipment is ready to be retested, and submit it to the CxA.

   2. Contractor shall reschedule and repeat the test.

b. If there is a dispute about a deficiency:

1. The dispute shall be documented on the non-compliance form with the Contractor's response.

2. Resolutions are made at the lowest management level possible. Other parties are brought into the discussions as needed. Final interpretive authority is with the Government. Final acceptance authority is with the Government's Contracting Officer (CO).

3. The CxA shall document the resolution process.

4. Once the interpretation and resolution have been decided, the Contractor shall correct the deficiency, sign the statement of correction on the non-compliance form and submit it to the CxA. The Contractor shall reschedule and repeat the test until satisfactory performance is achieved.

All costs associated with retesting a performance test is the Contractor's responsibility.

The Contractor shall submit in writing to the CxA and the Government, at least as often as commissioning meetings are being scheduled, the status of each outstanding discrepancy identified during commissioning. Discussion shall cover explanations of any disagreement and proposals for their resolutions.

a. The CxA shall retain the original non-conformance forms until the end of the project.

b. Retesting shall not be considered a justified reason for a claim of delay or for a time extension by the Contractor.

3.4.3 Failure Due to Manufacturer Defect

If 10% (or three, whichever is greater) of identical pieces of equipment fail to perform to the contract documents (mechanically or substantively) due to a manufacturing defect, not allowing it to meet its submitted performance specification, all identical units may be considered unacceptable by the Government. In such case, the Contractor shall provide the Government with the following:

a. Within one week of notification from the Government, the Contractor and the manufacturer's representative shall examine all other identical units making a record of the findings.

b. Within two weeks of the original notification, the Contractor or manufacturer shall provide a signed and dated, written explanation of the problem, cause of failures, etc., and all proposed solutions to the Government and the CxA. The proposed solutions shall not significantly exceed the specification requirements of the original installation.

c. The Government shall determine whether repair or replacement of all identical units is acceptable.

d. Up to two examples of the proposed solution shall be installed by the Contractor and the Government shall test the installations for up to one week, upon which the Government shall decide whether to accept the solution.

e. Upon acceptance, the Contractor and/or the manufacturer shall replace or repair all identical items, at no expense to the Government. The replacement/repair work shall proceed with reasonable speed beginning within one week from when parts can be obtained.

3.4.4 Approval

The CxA shall note each satisfactorily demonstrated function on the test form. Final approval of the functional performance test by the Government shall be made after review by the CxA and the Government.

3.5 DEFERRED TESTING

3.5.1 Unforeseen Deferred Tests

If any check or test cannot be completed due to the project completion level, required occupancy condition or other deficiency, execution of pre-functional checklists and functional performance testing may be delayed upon approval of the CxA and the Government. These tests will be conducted in the same manner as the seasonal tests as soon as possible. Services of necessary parties will be negotiated.

3.5.2 Seasonal Testing

During the warranty period, seasonal testing (tests delayed until weather conditions are closer to the system's design) shall be completed as part of this contract. The CxA shall coordinate this activity through the Government. Tests will be executed and documented by the CxA, and deficiencies shall be corrected by the Contractor with the CxA witnessing the testing. Any final adjustments to the O&M manuals and as-built documents due to the testing shall be made by the Contractor.

3.6 TRAINING OF GOVERNMENT PERSONNEL

Contractor shall provide training coordination and shall ensure that training is completed. All training shall be coordinated through the CxA.

a. The Contractor shall provide the CxA with a training plan sixty days before the planned training date covering the following elements:

    1. Equipment

    2. Intended audience

    3. Location of training

    4. Objectives

    5. Subjects covered (description, duration of discussion, special methods, etc.)

    6. Duration of training on each subject

    7. Instructor for each subject

    8. Methods (classroom lecture, manufacturer's quality video, site walk-through, actual operational demonstrations, written handouts, etc.).

b. Provide designated Government personnel with comprehensive orientation and training in the understanding of the systems and the operation and maintenance of each piece of equipment that makes up the system.

c. Training shall normally start with classroom sessions followed by hands-on demonstration/training on each piece of equipment.

d. During any demonstration, should the system fail to perform in accordance with the requirements of the O&M manual or sequence of operations, the system shall be repaired or adjusted as necessary and the demonstration repeated at another scheduled time, if necessary.

e. The appropriate trade or manufacturer's representative shall provide the instructions on each major piece of equipment. Practical building operating expertise as well as in-depth knowledge of all modes of operation of the specific piece of equipment is required. More than one party may be required to execute the training.

f. The controls contractor shall attend sessions other than the controls training, as specified, to discuss the interaction of the controls system as it relates to the equipment being discussed.

g. The training sessions shall follow the outline in the table of contents of the operation and maintenance manual and illustrate whenever possible the use of the O&M manuals for reference.

h. Training shall include:

1. Use of the printed installation, operation and maintenance instruction material included in the O&M manuals.

2. A review of the written O&M instructions emphasizing safe and proper operating requirements, preventative maintenance, special tools needed and spare parts inventory suggestions. The training shall include startup, operation in all modes possible, shutdown, seasonal changeover and any emergency procedures.

3. Discussion of relevant health and safety issues and concerns.

4. Discussion of warranties and guarantees.

5. Common troubleshooting problems and solutions.

6. Explanatory information included in the O&M manuals.

7. Discussion of any peculiarities of equipment installation or operation.

8. Classroom sessions shall include the use of overhead projections, slides, video/audio-taped material as might be appropriate.

9. Hands-on training shall include startup, operation in all modes possible, including manual, shut-down, alarms, power failure and any emergency procedures, and preventative maintenance for all pieces of equipment.

i. Contractor shall fully explain and demonstrate the operation, function and overrides of any local packaged controls not controlled by the central control system.

Contractor shall support all training efforts.

At the discretion of the CxA, training may occur before performance testing is complete if required by the facility operators, to assist the CxA in the performance testing.

Videotaping of the training sessions will be provided by the Contractor and added to the O&M manuals. In addition, factory training videos identifying key troubleshooting, repair, service and/or replacement techniques shall be provided and reviewed with the Government.

3.7 SYSTEMS (COMMISSIONING) MANUALS

Develop a systems manual that provides future operating staff the information needed to understand and optimally operate the commissioned systems in this facility. Similar to an 'owner's manual', the systems manual shall be compiled for the purpose of informing the building staff, including 'future' staff and current or future service contractors, as well as occupants and users as to the basis for operating and maintaining the building's mechanical-electrical-plumbing systems. The systems manual is intended to be useful in the day-to-day operations of a facility, and also shall form the basis of transferring important building information from one party to the next.

In addition to the Design Intent/Owner's Project Requirements (OPR), the Basis of Design (BOD), the project drawings and specifications, the commissioning process requires detailed Operations & Maintenance (O&M) documentation as identified in Section 01 78 23 OPERATION AND MAINTENANCE DATA, Section 01 78 24.00 20 FACILITY ELECTRONIC OPERATION AND MAINTENANCE SUPPORT INFORMATION (eOMSI), and in the technical specifications. The CxA shall review the O&M documentation provided by the Contractor for the equipment and systems for this project. From this documentation the CxA shall develop and compile a Systems (Commissioning) Manual. The Systems Manual should focus on operating, rather than maintaining the equipment, and on the interactions between equipment. The Systems Manual should include the following information for each commissioned system:

a. Executive Summary: Provide an introduction to the Systems Manual, including a history and a general description of the facility, as well as current facility operational requirements.

    1. Facility Description: Location, directions & history.

    2. Site Plan, Buildings & Floors included in the scope.

    3. Current Facility Requirements & Objectives.

    4. Functional Uses/Operational Capabilities.

    5. Space requirements.

    6. Special Requirements.

b. Provide Site Contact Information:

    1. Facilities personnel.

    2. Occupants/Users.

3. Contractors / Outside Resources.

4. Architects, Engineers & Consultants.

5. Previous Retrofit Projects information.

c. Design Intent:

1. Owner's Project Requirements (OPR).

2. Architect/Engineer's Basis of Design (BOD).

d. Basic O&M Instructions, Requirements & Procedures:

1. Expectations.

2. General Operating Instructions/Procedures.

3. System single line diagrams.

4. As-built sequences of operations, control drawings and original set points.

5. Operating instructions for integrated building systems.

6. Recommended schedule of maintenance requirements and frequency: Provide a schedule for preventive maintenance (PM) in both printed and electronic format. Provide frequency for each PM task including:

a) Cleaning: Provide instructions and schedules for all routine cleaning and inspection of equipment.

b) Inspection: If periodic inspection of equipment is required for operation, indicate the items to be inspected and provide the inspection criteria for motors, controls, filters and other items.

c) Repairs: Provide instructions for minor repairs or adjustments required for PM routines.

d) Corrective Maintenance: Provide corrective maintenance instructions based on a logical effect-to-cause trouble-shooting philosophy.

e) Troubleshooting: Provide a troubleshooting guide for each major item of equipment. Guide should include columns for 'malfunction', 'probable cause', and 'recommended action'.

f) Repair & Replacement: Indicate repair and replacement procedures most likely to be required in the maintenance of equipment.

7. Project O&M manuals.

8. Recommended schedule for retesting of commissioned systems with blank test forms from the original Commissioning Plan.

9. Recommend schedule for re-calibrating sensors and actuators

10. Operator Training: CxA shall review project training requirements for Government's operations personnel and the Contractor's training plan; and shall verify that the training meets the Owner's requirements, as stated in the contract documents.

11. Safety Precautions: Provide a listing of safety precautions and instructions to be followed before, during and after making repairs, adjustments or routine maintenance.

12. Manufacturer's Data: Manufacturer's brochures and other descriptive literature covering devices and equipment used in the system. Provide illustrations with exploded views and renewal parts lists.

    a) Indicate any special tools required to service or maintain the equipment.

    b) Performance data, ratings and curves.

    c) Warrantees and Guarantees: Review the conditions to be maintained to keep warranty in effect.

    d) Any service contracts issued or required.

13. Supplemental Data: Provide written narrative or text and any special drawings required to provide necessary information, where manufacturer's standard printed data is not available and information is necessary for a proper understanding, operation and maintenance of the equipment or systems.

e. Major Systems Commissioned: Provide an equipment list, description, and summary of the following major systems. Discuss maintenance requirements, control sequences of operations, trend log points, as-built drawings, etc. Provide model number, serial number and nameplate data for each piece of equipment, and sub-components. Provide installation & start-up instructions for each piece of equipment. Provide all normal and emergency starting and shutdown procedures and data.

1. Chilled Water System.

2. Hot Water System.

3. Outdoor Condensing Units.

4. Building Air Distribution Systems.

5. Plumbing Systems.

6. Electrical Systems: Lighting Controls.

7. Building DDC Controls.

8. Occupancy Requirements; AHU & A/C Unit Operating Schedules.

9. Indoor Environmental Requirements: Temperature & Humidity, Lighting, IAQ.

10. Energy/Utility Costs: Savings goals, Level of Control Desired.

11. Documentation & Training Needs.

12. Performance Acceptance Criteria.

13. DDC Controls for Basic Troubleshooting; Trending & Logging.

14. Recommended 'Best Practice' Maintenance Requirements for Critical Equipment & Systems.

f. Executed Commissioning Test Procedures:

1. Provide a copy of the final, executed commissioning testing & acceptance procedures used for this project.

2. Provide a copy of the final, executed pre-functional (construction) checklists used for this project.

g. Re-Commissioning Test Procedures:

1. Step-by-step procedure for system startup, including a pre-start checklist.

2. Sequence of operations with detailed instruction in proper sequence for each mode of operations, i.e. 'occupied', 'unoccupied', or 'custodial'.

3. Emergency Operation: Provide instructions for manual operation of equipment while some functions are disabled. Provide instructions for operating under these conditions.

4. Shutdown Procedure: Include instructions for stopping and securing the equipment after operation.

h. Operations & Maintenance Submittals: Provide a record copy of all appropriate shop drawing submittals for major items of mechanical, electrical or plumbing equipment, including the equipment manufacturer's O&M manuals.

1. The CxA shall be responsible for compiling, organizing and indexing the following commissioning record data by equipment into labeled, indexed and tabbed binders and deliver to the Contractor to be included in the O&M manuals.

2. Commissioning Plan.

3. System reports including design narratives and criteria including sequences of operations, start-up plan and report, approvals, corrections, construction checklists, completed performance tests, and recommended re-commissioning schedule.

4. Final Commissioning Report: Executive summary, list of participants with roles and responsibilities, overview of commissioning and testing scope, description of testing and verification methods. For each piece of equipment, the report should contain the disposition of the CxA regarding the adequacy of the equipment, as well as the documentation and training meeting the contract requirements.

5. Non-Compliance Items: All outstanding and non-compliance items shall be specifically listed. Recommendations for improvement to equipment or operations, future actions, commissioning process changes, etc. shall also be listed. Each non-compliance issue shall be referenced to the specific performance test, inspection, trend log, etc. where the deficiency is documented. The performance and efficiency section for each piece of equipment shall include a brief description of the verification method used (manual testing, BAS trend logs, data loggers, etc.) and include observations and conclusions from the testing.

-- End of Section --

SECTION 03 30 00

CAST-IN-PLACE CONCRETE
02/19

PART 1 GENERAL

1.1 REFERENCES

The publications listed below form a part of this specification to the extent referenced. The publications are referred to within the text by the basic designation only.

AMERICAN CONCRETE INSTITUTE (ACI)

ACI 117	(2010; Errata 2011) Specifications for Tolerances for Concrete Construction and Materials and Commentary
ACI 121R	(2008) Guide for Concrete Construction Quality Systems in Conformance with ISO 9001
ACI 213R	(2014; E2017) Guide for Structural Lightweight-Aggregate Concrete
ACI 301	(2016) Specifications for Structural Concrete
ACI 302.1R	(2015) Guide for Concrete Floor and Slab Construction
ACI 304.2R	(2017) Guide to Placing Concrete by Pumping Methods
ACI 304R	(2000; R 2009) Guide for Measuring, Mixing, Transporting, and Placing Concrete
ACI 305R	(2010) Guide to Hot Weather Concreting
ACI 306R	(2016) Guide to Cold Weather Concreting
ACI 308.1	(2011) Specification for Curing Concrete
ACI SP-2	(2007; Abstract: 10th Edition) ACI Manual of Concrete Inspection
ACI SP-15	(2011) Field Reference Manual: Standard Specifications for Structural Concrete ACI 301-05 with Selected ACI References

AMERICAN HARDBOARD ASSOCIATION (AHA)

AHA A135.4	(1995; R 2004) Basic Hardboard

AMERICAN WELDING SOCIETY (AWS)

AWS D1.4/D1.4M	(2011) Structural Welding Code -

Reinforcing Steel

ASTM INTERNATIONAL (ASTM)

ASTM A36/A36M	(2014) Standard Specification for Carbon Structural Steel
ASTM A53/A53M	(2018) Standard Specification for Pipe, Steel, Black and Hot-Dipped, Zinc-Coated, Welded and Seamless
ASTM A184/A184M	(2019) Standard Specification for Welded Deformed Steel Bar Mats for Concrete Reinforcement
ASTM A615/A615M	(2016) Standard Specification for Deformed and Plain Carbon-Steel Bars for Concrete Reinforcement
ASTM A706/A706M	(2016) Standard Specification for Low-Alloy Steel Deformed and Plain Bars for Concrete Reinforcement
ASTM A767/A767M	(2016) Standard Specification for Zinc-Coated (Galvanized) Steel Bars for Concrete Reinforcement
ASTM A775/A775M	(2017) Standard Specification for Epoxy-Coated Steel Reinforcing Bars
ASTM A780/A780M	(2009; R 2015) Standard Practice for Repair of Damaged and Uncoated Areas of Hot-Dip Galvanized Coatings
ASTM A884/A884M	(2019) Standard Specification for Epoxy-Coated Steel Wire and Welded Wire Reinforcement
ASTM A934/A934M	(2016) Standard Specification for Epoxy-Coated Prefabricated Steel Reinforcing Bars
ASTM A955/A955M	(2018b) Standard Specification for Deformed and Plain Stainless-Steel Bars for Concrete Reinforcement
ASTM A970/A970M	(2018) Standard Specification for Headed Steel Bars for Concrete Reinforcement
ASTM A996/A996M	(2016) Standard Specification for Rail-Steel and Axle-Steel Deformed Bars for Concrete Reinforcement
ASTM A1022/A1022M	(2016b) Standard Specification for Deformed and Plain Stainless Steel Wire and Welded Wire for Concrete Reinforcement
ASTM A1044/A1044M	(2016a) Standard Specification for Steel Stud Assemblies for Shear Reinforcement of

	Concrete
ASTM A1055/A1055M	(2016) Standard Specification for Zinc and Epoxy Dual Coated Steel Reinforcing Bars
ASTM A1060/A1060M	(2016b) Standard Specification for Zinc-Coated (Galvanized) Steel Welded Wire Reinforcement, Plain and Deformed, for Concrete
ASTM A1064/A1064M	(2017) Standard Specification for Carbon-Steel Wire and Welded Wire Reinforcement, Plain and Deformed, for Concrete
ASTM C31/C31M	(2019) Standard Practice for Making and Curing Concrete Test Specimens in the Field
ASTM C33/C33M	(2018) Standard Specification for Concrete Aggregates
ASTM C39/C39M	(2018) Standard Test Method for Compressive Strength of Cylindrical Concrete Specimens
ASTM C42/C42M	(2018a) Standard Test Method for Obtaining and Testing Drilled Cores and Sawed Beams of Concrete
ASTM C78/C78M	(2018) Standard Test Method for Flexural Strength of Concrete (Using Simple Beam with Third-Point Loading)
ASTM C94/C94M	(2018) Standard Specification for Ready-Mixed Concrete
ASTM C143/C143M	(2015) Standard Test Method for Slump of Hydraulic-Cement Concrete
ASTM C150/C150M	(2018) Standard Specification for Portland Cement
ASTM C172/C172M	(2017) Standard Practice for Sampling Freshly Mixed Concrete
ASTM C173/C173M	(2016) Standard Test Method for Air Content of Freshly Mixed Concrete by the Volumetric Method
ASTM C231/C231M	(2017a) Standard Test Method for Air Content of Freshly Mixed Concrete by the Pressure Method
ASTM C260/C260M	(2010a; R 2016) Standard Specification for Air-Entraining Admixtures for Concrete
ASTM C311/C311M	(2018) Standard Test Methods for Sampling and Testing Fly Ash or Natural Pozzolans for Use in Portland-Cement Concrete

ASTM C330/C330M	(2017a) Standard Specification for Lightweight Aggregates for Structural Concrete
ASTM C494/C494M	(2017) Standard Specification for Chemical Admixtures for Concrete
ASTM C552	(2017; E 2018) Standard Specification for Cellular Glass Thermal Insulation
ASTM C578	(2018) Standard Specification for Rigid, Cellular Polystyrene Thermal Insulation
ASTM C591	(2019a) Standard Specification for Unfaced Preformed Rigid Cellular Polyisocyanurate Thermal Insulation
ASTM C595/C595M	(2018) Standard Specification for Blended Hydraulic Cements
ASTM C618	(2019) Standard Specification for Coal Fly Ash and Raw or Calcined Natural Pozzolan for Use in Concrete
ASTM C803/C803M	(2018) Standard Test Method for Penetration Resistance of Hardened Concrete
ASTM C845/C845M	(2018) Standard Specification for Expansive Hydraulic Cement
ASTM C873/C873M	(2015) Standard Test Method for Compressive Strength of Concrete Cylinders Cast in Place in Cylindrical Molds
ASTM C900	(2015) Standard Test Method for Pullout Strength of Hardened Concrete
ASTM C920	(2018) Standard Specification for Elastomeric Joint Sealants
ASTM C989/C989M	(2018a) Standard Specification for Slag Cement for Use in Concrete and Mortars
ASTM C1012/C1012M	(2018b) Standard Test Method for Length Change of Hydraulic-Cement Mortars Exposed to a Sulfate Solution
ASTM C1017/C1017M	(2013; E 2015) Standard Specification for Chemical Admixtures for Use in Producing Flowing Concrete
ASTM C1074	(2011) Standard Practice for Estimating Concrete Strength by the Maturity Method
ASTM C1077	(2017) Standard Practice for Agencies Testing Concrete and Concrete Aggregates for Use in Construction and Criteria for Testing Agency Evaluation

ASTM C1107/C1107M	(2017) Standard Specification for Packaged Dry, Hydraulic-Cement Grout (Nonshrink)
ASTM C1157/C1157M	(2017) Standard Performance Specification for Hydraulic Cement
ASTM C1218/C1218M	(2017) Standard Test Method for Water-Soluble Chloride in Mortar and Concrete
ASTM C1240	(2014) Standard Specification for Silica Fume Used in Cementitious Mixtures
ASTM C1260	(2014) Standard Test Method for Potential Alkali Reactivity of Aggregates (Mortar-Bar Method)
ASTM C1293	(2008; R 2015) Standard Test Method for Determination of Length Change of Concrete Due to Alkali-Silica Reaction
ASTM C1567	(2013) Standard Test Method for Potential Alkali-Silica Reactivity of Combinations of Cementitious Materials and Aggregate (Accelerated Mortar-Bar Method)
ASTM C1602/C1602M	(2018) Standard Specification for Mixing Water Used in Production of Hydraulic Cement Concrete
ASTM C1778	(2016) Standard Guide for Reducing the Risk of Deleterious Alkali-Aggregate Reaction in Concrete
ASTM D412	(2016) Standard Test Methods for Vulcanized Rubber and Thermoplastic Elastomers - Tension
ASTM D471	(2016a) Standard Test Method for Rubber Property - Effect of Liquids
ASTM D1751	(2004; E 2013; R 2013) Standard Specification for Preformed Expansion Joint Filler for Concrete Paving and Structural Construction (Nonextruding and Resilient Bituminous Types)
ASTM D1752	(2018) Standard Specification for Preformed Sponge Rubber, Cork and Recycled PVC Expansion Joint Fillers for Concrete Paving and Structural Construction
ASTM D2628	(1991; R 2016) Standard Specification for Preformed Polychloroprene Elastomeric Joint Seals for Concrete Pavements
ASTM D2835	(1989; R 2017) Standard Specification for Lubricant for Installation of Preformed

	Compression Seals in Concrete Pavements
ASTM D3042	(2017) Standard Test Method for Insoluble Residue in Carbonate Aggregates
ASTM D5759	(2012) Characterization of Coal Fly Ash and Clean Coal Combustion Fly Ash for Potential Uses
ASTM D6690	(2015) Standard Specification for Joint and Crack Sealants, Hot Applied, for Concrete and Asphalt Pavements
ASTM E96/E96M	(2016) Standard Test Methods for Water Vapor Transmission of Materials
ASTM E329	(2018) Standard Specification for Agencies Engaged in Construction Inspection, Testing, or Special Inspection
ASTM E1155	(2014) Standard Test Method for Determining Floor Flatness and Floor Levelness Numbers
ASTM E1643	(2018a) Standard Practice for Selection, Design, Installation, and Inspection of Water Vapor Retarders Used in Contact with Earth or Granular Fill Under Concrete Slabs
ASTM E1745	(2017) Standard Specification for Water Vapor Retarders Used in Contact with Soil or Granular Fill under Concrete Slabs

CONCRETE REINFORCING STEEL INSTITUTE (CRSI)

CRSI 10MSP	(2009; 28th Ed; Errata) Manual of Standard Practice
CRSI RB4.1	(2016) Supports for Reinforcement Used in Concrete

FOREST STEWARDSHIP COUNCIL (FSC)

FSC STD 01 001	(2015) Principles and Criteria for Forest Stewardship

NATIONAL INSTITUTE OF STANDARDS AND TECHNOLOGY (NIST)

NIST PS 1	(2009) DOC Voluntary Product Standard PS 1-07, Structural Plywood

U.S. ARMY CORPS OF ENGINEERS (USACE)

COE CRD-C 513	(1974) Corps of Engineers Specifications for Rubber Waterstops
COE CRD-C 572	(1974) Corps of Engineers Specifications for Polyvinylchloride Waterstops

U.S. GREEN BUILDING COUNCIL (USGBC)

LEED NC	(2009) Leadership in Energy and Environmental Design(tm) New Construction Rating System

1.2 DEFINITIONS

a. "Cementitious material" as used herein must include all portland cement, pozzolan, fly ash, slag cement, and silica fume.

b. "Exposed to public view" means situated so that it can be seen from eye level from a public location after completion of the building. A public location is accessible to persons not responsible for operation or maintenance of the building.

c. "Chemical admixtures" are materials in the form of powder or fluids that are added to the concrete to give it certain characteristics not obtainable with plain concrete mixes.

d. "Supplementary cementing materials" (SCM) include coal fly ash, silica fume, slag cement, natural or calcined pozzolans, and ultra-fine coal ash when used in such proportions to replace the portland cement that result in improvement to sustainability and durability and reduced cost.

e. "Design strength" (f'c) is the specified compressive strength of concrete at time(s) specified in this section to meet structural design criteria.

f. "Mass Concrete" is any concrete system that approaches a maximum temperature of 158 degrees F within the first 72 hours of placement. In addition, it includes all concrete elements with a section thickness of 3 feet or more regardless of temperature.

g. "Mixture proportioning" is the process of designing concrete mixture proportions to enable it to meet the strength, service life and constructability requirements of the project while minimizing the initial and life-cycle cost.

h. "Mixture proportions" are the masses or volumes of individual ingredients used to make a unit measure (cubic meter or cubic yard) of concrete.

i. "Pozzolan" is a siliceous or siliceous and aluminous material, which in itself possesses little or no cementitious value but will, in finely divided form and in the presence of moisture, chemically react with calcium hydroxide at ordinary temperatures to form compounds possessing cementitious properties.

j. "Workability (or consistence)" is the ability of a fresh (plastic) concrete mix to fill the form/mould properly with the desired work (vibration) and without reducing the concrete's quality. Workability depends on water content, chemical admixtures, aggregate (shape and size distribution), cementitious content and age (level of hydration).

1.3 SUBMITTALS

Government approval is required for submittals with a "G" designation;

submittals not having a "G" designation are for Contractor Quality Control approval. Submittals with an "S" are for inclusion in the Sustainability eNotebook, in conformance with Section 01 33 29 SUSTAINABILITY REPORTING. Submit the following in accordance with Section 01 33 00 SUBMITTAL PROCEDURES:

SD-01 Preconstruction Submittals

Concrete Curing Plan

Quality Control Plan; G

Quality Control Personnel Certifications; G

Quality Control Organizational Chart

Laboratory Accreditation; G

Maturity Method Data

SD-02 Shop Drawings

Reinforcing Steel; G

SD-03 Product Data

Joint Sealants; (LEED NC)

Joint Filler; (LEED NC)

Formwork Materials

Recycled Aggregate Materials; (LEED NC)

Cementitious Materials; (LEED NC)

Vapor Retarder

Concrete Curing Materials

Reinforcement; (LEED NC)

Liquid Chemical Floor Hardeners and Sealers

Admixtures

Reinforcing Fibers

Mechanical Reinforcing Bar Connectors

Waterstops

Local/Regional Materials; (LEED NC)

Biodegradable Form Release Agent

Pumping Concrete

Nonshrink Grout

SD-04 Samples

SD-05 Design Data

Concrete Mix Design; G

SD-06 Test Reports

Concrete Mix Design; G

Fly Ash

Pozzolan

Slag Cement

Aggregates

Compressive Strength Tests; G

Air Content

Slump Tests

Water

SD-07 Certificates

Reinforcing Bars

Welder Qualifications

VOC Content for Form Release Agents, Curing Compounds, and Concrete Penetrating Sealers

Safety Data Sheets

Forest Stewardship Council (FSC) Certification

Field Testing Technician and Testing Agency

SD-08 Manufacturer's Instructions

Liquid Chemical Floor Hardeners and Sealers

Joint Sealants; (LEED NC)

Curing Compound

1.4 MODIFICATION OF REFERENCES

Accomplish work in accordance with ACI publications except as modified herein. Consider the advisory or recommended provisions to be mandatory. Interpret reference to the "Building Official," the "Structural Engineer," and the "Architect/Engineer" to mean the Contracting Officer.

1.5 DELIVERY, STORAGE, AND HANDLING

Follow ACI 301, ACI 304R and ASTM A934/A934M requirements and recommendations. Do not deliver concrete until vapor retarder,(NOte: the terms 'vapor retarder' and 'vapor barrier' are used interchangable in these specifications) forms, reinforcement, embedded items, and chamfer strips are in place and ready for concrete placement. Do not store concrete curing compounds or sealers with materials that have a high capacity to adsorb volatile organic compound (VOC) emissions . Do not store concrete curing compounds or sealers in occupied spaces.

1.5.1 Reinforcement

Store reinforcement of different sizes and shapes in separate piles or racks raised above the ground to avoid excessive rusting. Protect from contaminants such as grease, oil, and dirt. Ensure bar sizes can be accurately identified after bundles are broken and tags removed.

1.6 QUALITY ASSURANCE

1.6.1 Design Data

1.6.1.1 Concrete Mix Design

Sixty days minimum prior to concrete placement, submit a mix design for each strength and type of concrete. Submit a complete list of materials including type; brand; source and amount of cement, supplementary cementitious materials, , and admixtures; and applicable reference specifications. Submit mill test and all other test for cement, supplementary cementitious materials, aggregates, and admixtures. Provide documentation of maximum nominal aggregate size, gradation analysis, percentage retained and passing sieve, and a graph of percentage retained verses sieve size. Provide mix proportion data using at least three different water-cementitious material ratios for each type of mixture, which produce a range of strength encompassing those required for each type of concrete required. If source material changes, resubmit mix proportion data using revised source material. Provide only materials that have been proven by trial mix studies to meet the requirements of this specification, unless otherwise approved in writing by the Contracting Officer. Indicate clearly in the submittal where each mix design is used when more than one mix design is submitted. Resubmit data on concrete components if the qualities or source of components changes. For previously approved concrete mix designs used within the past twelve months, the previous mix design may be re-submitted without further trial batch testing if accompanied by material test data conducted within the last six months. Obtain mix design approval from the contracting officer prior to concrete placement.

1.6.2 Shop Drawings

1.6.2.1 Reinforcing Steel

Indicate bending diagrams, assembly diagrams, splicing and laps of bars, shapes, dimensions, and details of bar reinforcing, accessories, and concrete cover. Do not scale dimensions from structural drawings to determine lengths of reinforcing bars. Reproductions of contract drawings are unacceptable.

1.6.3 Control Submittals

1.6.3.1 Concrete Curing Plan

Submit proposed materials, methods and duration for curing concrete elements in accordance with ACI 308.1.

1.6.3.2 VOC Content for form release agents, curing compounds, and concrete penetrating sealers

Submit certification for the form release agent, curing compounds, and concrete penetrating sealers that indicate the VOC content of each product.

1.6.3.3 Safety Data Sheets

Submit Safety Data Sheets (SDS) for all materials that are regulated for hazardous health effects. SDS must be readily accessible during each work shift to employees when they are at the construction site.

1.6.4 Test Reports

1.6.4.1 Fly Ash and Pozzolan

Submit test results in accordance with ASTM C618 for fly ash and pozzolan. Submit test results performed within 6 months of submittal date.

1.6.4.2 Slag Cement

Submit test results in accordance with ASTM C989/C989M for slag cement. Submit test results performed within 6 months of submittal date.

1.6.4.3 Aggregates

Submit test results in accordance with ASTM C33/C33M, or ASTM C330/C330M for lightweight aggregate, and ASTM C1293 or ASTM C1567 as required in the paragraph titled ALKALI-AGGREGATE REACTION.

1.6.5 Field Samples

1.6.5.1 Surface Finish Samples

Provide a minimum of three sample concrete panels for each finish for each mix design, 3 feet by 3 feet, 3 inches thick. Use the approved concrete mix design(s). Provide sample panels on-site at locations directed. Once approved, each set of panels must be representative of each of the finishes specified and of the workmanship and finish(es) required. Do not remove or destroy samples until directed by the Contracting Officer.

1.6.6 Quality Control Plan

Develop and submit for approval a concrete quality control program in accordance with the guidelines of ACI 121R and as specified herein. The plan must include approved laboratories. Provide direct oversight for the concrete qualification program inclusive of associated sampling and testing. All quality control reports must be provided to the Contracting Officer, Quality Manager and Concrete Supplier. Maintain a copy of ACI SP-15 and CRSI 10MSP at project site.

1.6.7 Quality Control Personnel Certifications

The Contractor must submit for approval the responsibilities of the

various quality control personnel, including the names and qualifications of the individuals in those positions and a quality control organizational chart defining the quality control hierarchy and the responsibility of the various positions. Quality control personnel must be employed by the Contractor.

Submit American Concrete Institute certification for the following:

a. CQC personnel responsible for inspection of concrete operations.

b. Lead Foreman or Journeyman of the Concrete Placing, Finishing, and Curing Crews.

c. Field Testing Technicians: ACI Concrete Field Testing Technician, Grade I.

1.6.7.1 Quality Manager Qualifications

The quality manager must hold a current license as a professional engineer in a U.S. state or territory with experience on at least five similar projects. Evidence of extraordinary proven experience may be considered by the Contracting Officer as sufficient to act as the Quality Manager.

1.6.7.2 Field Testing Technician and Testing Agency

Submit data on qualifications of proposed testing agency and technicians for approval by the Contracting Officer prior to performing testing on concrete.

a. Work on concrete under this contract must be performed by an ACI Concrete Field Testing Technician Grade 1 qualified in accordance with ACI SP-2 or equivalent. Equivalent certification programs must include requirements for written and performance examinations as stipulated in ACI SP-2.

b. Testing agencies that perform testing services on reinforcing steel must meet the requirements of ASTM E329.

c. Testing agencies that perform testing services on concrete materials must meet the requirements of ASTM C1077.

1.6.8 Laboratory Qualifications for Concrete Qualification Testing

The concrete testing laboratory must have the necessary equipment and experience to accomplish required testing. The laboratory must meet the requirements of ASTM C1077 and be Cement and Concrete Reference Laboratory (CCRL) inspected.

1.6.9 Laboratory Accreditation

Laboratory and testing facilities must be provided by and at the expense of the Contractor. The laboratories performing the tests must be accredited in accordance with ASTM C1077, including ASTM C78/C78M and ASTM C1260. The accreditation must be current and must include the required test methods, as specified. Furthermore, the testing must comply with the following requirements:

a. Aggregate Testing and Mix Proportioning: Aggregate testing and mixture proportioning studies must be performed by an accredited laboratory

and under the direction of a registered professional engineer in a U.S. state or territory competent in concrete materials who is competent in concrete materials and must sign all reports and designs.

b. Acceptance Testing: Furnish all materials, labor, and facilities required for molding, curing, testing, and protecting test specimens at the site and in the laboratory. Furnish and maintain boxes or other facilities suitable for storing and curing the specimens at the site while in the mold within the temperature range stipulated by ASTM C31/C31M.

c. Contractor Quality Control: All sampling and testing must be performed by an approved, onsite, independent, accredited laboratory.

1.7 ENVIRONMENTAL REQUIREMENTS

Provide space ventilation according to material manufacturer recommendations, at a minimum, during and following installation of concrete curing compound and sealer. Maintain one of the following ventilation conditions during the curing period or for 72 hours after installation:

a. Supply 100 percent outside air 24 hours a day.

b. Supply airflow at a rate of 6 air changes per hour, when outside temperatures are between 55 degrees F and 84 degrees F and humidity is between 30 percent and 60 percent.

c. Supply airflow at a rate of 1.5 air changes per hour, when outside air conditions are not within the range stipulated above.

1.7.1 Submittals for Environmental Performance

a. Provide data indication the percentage of post-industrial pozzolan (fly ash, slag cement) cement substitution as a percentage of the full product composite by weight.

b. Provide data indicating the percentage of post-industrial and post-consumer recycled content aggregate.

c. Provide product data indicating the percentage of post-consumer recycled steel content in each type of steel reinforcement as a percentage of the full product composite by weight.

d. Provide product data stating the location where all products were manufactured

e. For projects using FSC certified formwork, provide chain-of-custody documentation for all certified wood products.

f. For projects using reusable formwork, provide data showing how formwork is reused.

g. Provide SDS product information data showing that form release agents meet any environmental performance goals such as using vegetable and soy based products.

h. Provide SDS product information data showing that concrete adhesives meet any environmental performance goals including low emitting, low

volatile organic compound products.

1.8 SUSTAINABLE DESIGN REQUIREMENTS

1.8.1 Local/Regional Materials

Use materials or products extracted, harvested, or recovered, as well as manufactured, within a 500 mile radius from the project site, if available from a minimum of three sources.See Section 01 33 29 SUSTAINABILITY REPORTING for cumulative total local material requirements. Concrete materials may be locally available. Submit documentation indicating distance between manufacturing facility and the project site. Indicate distance of raw material origin from the project site. Indicate relative dollar value of local/regional materials to total dollar value of products included in project.

1.8.2 Forest Stewardship Council (FSC) Certification

Use FSC-certified wood where specified. Provide letter of certification signed by lumber supplier. Indicate compliance with FSC STD 01 001 and identify certifying organization. Submit FSC certification numbers; identify each certified product on a line-item basis. Submit copies of invoices bearing the FSC certification numbers.

1.9 QUALIFICATIONS FOR WELDING WORK

Welding procedures must be in accordance with AWS D1.4/D1.4M.

Verify that Welder qualifications are in accordance with AWS D1.4/D1.4M for welding of reinforcement or under an equivalent qualification test approved in advance. Welders are permitted to do only the type of welding for which each is specifically qualified.

PART 2 PRODUCTS

2.1 FORMWORK MATERIALS

a. Form-facing material in contact with concrete must be lumber, plywood, metal, plastic, or . Submit product information on proposed form-facing materials if different from that specified herein.

b. Design formwork, shores, reshores, and backshores to support loads transmitted to them and to comply with applicable building code requirements.

c. Design formwork and shoring for load redistribution resulting from stressing of post-tensioned reinforcement. Ensure that formwork allows movement resulting from application of prestressing force.

d. Design formwork to withstand pressure resulting from placement and vibration of concrete and to maintain specified tolerances.

e. Design formwork to accommodate waterstop materials in joints at locations indicated in Contract Documents.

f. Provide temporary openings in formwork if needed to facilitate cleaning and inspection.

g. Design formwork joints to inhibit leakage of mortar.

h. Limit deflection of facing materials for concrete surfaces exposed to view to 1/240 of center-to-center spacing of facing supports.

j. Submit product information on proposed form-facing materials if different from that specified herein.

m. Submit procedure for reshoring and backshoring, including drawings signed and sealed by a licensed design engineer. Include on shop drawings the formwork removal procedure and magnitude of construction loads used for design of reshoring or backshoring system. Indicate in procedure the magnitude of live and dead loads assumed for required capacity of the structure at time of reshoring or backshoring.

n. Submit manufacturer's product data on form liner proposed for use with each formed surface.

2.1.1 Wood Forms

Use lumber as specified in Section 06 10 00 ROUGH CARPENTRY and as follows. Provide lumber that is square edged or tongue-and-groove boards, free of raised grain, knotholes, or other surface defects. Provide plywood that complies with NIST PS 1, B-B concrete form panels or better or AHA A135.4, hardboard for smooth form lining. Submit data verifying that composite wood products contain no urea formaldehyde resins. Virgin wood used must be FSC-certified.

2.1.1.1 Concrete Form Plywood (Standard Rough)

Provide plywood that conforms to NIST PS 1, B-B, concrete form, not less than 5/8-inch thick.

2.1.1.2 Overlaid Concrete Form Plywood (Standard Smooth)

Provide plywood that conforms to NIST PS 1, B-B, high density form overlay, not less than 5/8-inch thick.

2.1.2 Plastic Forms

Plastic lumber as specified in Section 06 10 00 ROUGH CARPENTRY. Provide plastic forms that contain a minimum of 50 percent post-consumer recycled content, or a minimum of 50 percent post-industrial recycled content.

2.1.3 Carton Forms

Moisture resistant treated paper faces, biodegradable, structurally sufficient to support weight of wet concrete until initial set. Provide carton forms that contain a minimum of 5 percent post-consumer recycled content, or a minimum of 20 percent post-industrial recycled content.

2.1.4 Steel Forms

Provide steel form surfaces that do not contain irregularities, dents, or sags.

2.2 FORMWORK ACCESSORIES

a. Use commercially manufactured formwork accessories, including ties and hangers.

b. Form ties and accessories must not reduce the effective cover of the reinforcement.

2.2.1 Form Ties

a. Use form ties with ends or end fasteners that can be removed without damage to concrete.

b. Where indicated in Contract Documents, use form ties with integral water barrier plates or other acceptable positive water barriers in walls.

c. The breakback distance for ferrous ties must be at least 2 in. for Surface Finish-2.0 or Surface Finish-3.0, as defined in ACI 301.

e. Submit manufacturer's data sheet on form ties.

2.2.2 Waterstops

Submit manufacturer's data sheet on waterstop materials and splices.

2.2.2.1 PVC Waterstop

Polyvinylchloride waterstops must conform to COE CRD-C 572.

2.2.2.2 Rubber Waterstop

Rubber waterstops must conform to COE CRD-C 513.

2.2.2.3 Thermoplastic Elastomeric Rubber Waterstop

Thermoplastic elastomeric rubber waterstops must conform to ASTM D471.

2.2.2.4 Hydrophilic Waterstop

Swellable strip type compound of polymer modified chloroprene rubber that swells upon contact with water must conform to the following requirements when tested in accordance to ASTM D412: Tensile strength 420 psi minimum; ultimate elongation 600 percent minimum. Hardness must be 50 minimum on the type A durometer and the volumetric expansion ratio in distilled water at 70 degrees F must be 3 to 1 minimum.

2.2.3 Biodegradable Form Release Agent

a. Provide form release agent that is colorless, biodegradable, and rapeseed oil-based soy oil-based water-based, with a zero VOC content. A minimum of 85 percent of the total product must be biobased material.

b. Provide product that does not bond with, stain, or adversely affect concrete surfaces and does not impair subsequent treatments of concrete surfaces.

c. Provide form release agent that reduces formwork moisture absorption, and does not contain diesel fuel, petroleum-based lubricating oils, waxes, or kerosene. Submit documentation indicating type of biobased material in product and biobased content. Indicate relative dollar value of biobased content products to total dollar value of products

included in project.

d. Submit manufacturer's product data on formwork release agent for use on each form-facing material.

2.2.4 Chamfer Materials

Use lumber materials with dimensions of 3/4 x 3/4 in.

2.2.5 Construction and movement joints

a. Submit details and locations of construction joints in accordance with the requirements herein.

b. Locate construction joints within middle one-third of spans of slabs, beams, and girders. If a beam intersects a girder within the middle one-third of girder span, the distance between the construction joint in the girder and the edge of the beam must be at least twice the width of the larger member.

c. For members with post-tensioning tendons, locate construction joints where tendons pass through centroid of concrete section.

d. Locate construction joints in walls and columns at underside of slabs, beams, or girders and at tops of footings or slabs.

e. Make construction joints perpendicular to main reinforcement.

f. Provide movement joints where indicated in Contract Documents or in accepted alternate locations.

g. Submit location and detail of movement joints if different from those indicated in Contract Documents.

h. Submit manufacturer's data sheet on expansion joint materials.

i. Provide keyways where indicated in Contract Documents. Longitudinal keyways indicated in Contract Documents must be at least 1-1/2 in. deep, measured perpendicular to the plane of the joint.

2.2.6 Perimeter Insulation

Perimeter insulation must be polystyrene conforming to ASTM C578, Type II; polyurethane conforming to ASTM C591, Type II; or cellular glass conforming to ASTM C552, Type I or IV. Comply with EPA requirements in accordance with Section 01 33 29 SUSTAINABILITY REPORTING.

2.2.7 Other Embedded items

Use sleeves, inserts, anchors, and other embedded items of material and design indicated in Contract Documents.

2.3 CONCRETE MATERIALS

2.3.1 Cementitious Materials

2.3.1.1 Portland Cement

a. Unless otherwise specified, provide cement that conforms to ASTM C150/C150M Type I II and meets low alkali content requirements.

b. Use one brand and type of cement for formed concrete having exposed-to-view finished surfaces.

c. For portland cement manufactured in a kiln fueled by hazardous waste, maintain a record of source for each batch. Supplier must certify that no hazardous waste is used in the fuel mix or raw materials. Supplier must certify that the hazardous waste is neutralized by the manufacturing process and that no additional pollutants are discharged.

d. Submit information along with evidence demonstrating compliance with referenced standards. Submittals must include types of cementitious materials, manufacturing locations, shipping locations, and certificates showing compliance.

e. Cementitious materials must be stored and kept dry and free from contaminants.

2.3.1.2 Blended Cements

a. Blended cements must conform to ASTM C595/C595M Type IP IS or ASTM C1157/C1157M Type GU .

b. Slag cement added to the Type IS blend must meet ASTM C989/C989M.

c. The pozzolan added to the Type IP blend must be ASTM C618 Class F fly ash and must be interground with the cement clinker. The manufacturer must state in writing that the amount of pozzolan in the finished cement will not vary more than plus or minus 5 mass percent of the finished cement from lot-to-lot or within a lot. The percentage and type of pozzolan used in the blend must not change from that submitted for the aggregate evaluation and mixture proportioning.

2.3.1.3 Fly Ash

a. ASTM C618, Class F , except that the maximum allowable loss on ignition must not exceed 6 percent.

b. Fly ash content must be a minimum of 15 percent by weight of cementitious material, provided the fly ash does not reduce the amount of cement in the concrete mix below the minimum requirements of local building codes. Where the use of fly ash cannot meet the minimum level, provide the maximum amount of fly ash permittable that meets the code requirements for cement content. Report the chemical analysis of the fly ash in accordance with ASTM C311/C311M. Evaluate and classify fly ash in accordance with ASTM D5759.

2.3.1.4 Slag cement

ASTM C989/C989M, Grade 100 . Slag content must be a minimum of 25 percent by weight of cementitious material.

2.3.1.5 Silica Fume

Silica fume must conform to ASTM C1240, including the optional limits on reactivity with cement alkalis. Silica fume may be furnished as a dry, densified material or as slurry. Proper mixing is essential to accomplish

proper distribution of the silica fume and avoid agglomerated silica fume which can react with the alkali in the cement resulting in premature and extensive concrete damage. Supervision at the batch plant, finishing, and curing is essential. Provide at the Contractor's expense the services of a manufacturer's technical representative, experienced in mixing, proportioning, placement procedures, and curing of concrete containing silica fume. This representative must be present on the project prior to and during at least the first 4 days of concrete production and placement using silica fume. A High Range Water Reducing admixture (HRWRA) must be used with silica fume.

2.3.1.6 Other Supplementary Cementitious Materials

Natural pozzolan must be raw or calcined and conform to ASTM C618, Class N, including the optional requirements for uniformity and effectiveness in controlling ASR and must have an ignition loss not exceeding 3 percent. Class N pozzolan for use in mitigating ASR must have a Calcium Oxide (CaO) content of less than 13 percent and total equivalent alkali content less than 3 percent.

Ultra Fine Fly Ash (UFFA) and Ultra Fine Pozzolan (UFP) must conform to ASTM C618, Class F or N, and the following additional requirements:

a. The strength activity index at 28 days of age must be at least 95 percent of the control specimens.

b. The average particle size must not exceed 6 microns.

c. The sum of SiO_2 + Al_2O_3 + Fe_2O_3 must be greater than 77 percent.

2.3.2 Water

a. Water or ice must comply with the requirements of ASTM C1602/C1602M.

b. Minimize the amount of water in the mix. Improve workability by adjusting the grading of the aggregate and using admixture rather than by adding water.

c. Water must be potable ; free from injurious amounts of oils, acids, alkalis, salts, organic materials, or other substances deleterious to concrete.

d. Protect mixing water and ice from contamination during storage and delivery.

e. Submit test report showing water complies with ASTM C1602/C1602M.

2.3.3 Aggregate

2.3.3.1 Normal-Weight Aggregate

a. Aggregates must conform to ASTM C33/C33M unless otherwise specified in the Contract Documents or approved by the contracting officer.

b. Aggregates used in concrete must be obtained from the same sources and have the same size range as aggregates used in concrete represented by submitted field test records or used in trial mixtures.

c. Provide sand that is at least 50 percent acid insoluble based on

ASTM D3042.

d. Store and handle aggregate in a manner that will avoid segregation and prevents contamination by other materials or other sizes of aggregates. Store aggregates in locations that will permit them to drain freely. Do not use aggregates that contain frozen lumps.

e. Submit types, pit or quarry locations, producers' names, aggregate supplier statement of compliance with ASTM C33/C33M, and ASTM C1293 expansion data not more than 18 months old.

2.3.3.2 Lightweight Aggregate

Lightweight aggregate in accordance with ASTM C330/C330M.

2.3.3.3 Recycled Aggregate Materials

Use a minimum of 25 percent recycled aggregate, depending on local availability and conforming to requirements of the mix design. Recycled aggregate to include: that meets the aggregate requirements specified. Submit recycled material request with the aggregate certification submittals and do not use until approved by the Contracting Officer.

2.3.4 Admixtures

a. Chemical admixtures must conform to ASTM C494/C494M.

b. Air-entraining admixtures must conform to ASTM C260/C260M.

c. Chemical admixtures for use in producing flowing concrete must conform to ASTM C1017/C1017M.

d. Do not use calcium chloride admixtures.

f. Admixtures used in concrete must be the same as those used in the concrete represented by submitted field test records or used in trial mixtures.

g. Protect stored admixtures against contamination, evaporation, or damage.

h. To ensure uniform distribution of constituents, provide agitating equipment for admixtures used in the form of suspensions or unstable solutions. Protect liquid admixtures from freezing and from temperature changes that would adversely affect their characteristics.

i. Submit types, brand names, producers' names, manufacturer's technical data sheets, and certificates showing compliance with standards required herein.

2.4 MISCELLANEOUS MATERIALS

2.4.1 Concrete Curing Materials

Provide concrete curing material in accordance with ACI 301 Section 5 and ACI 308.1 Section 2. Submit product data for concrete curing compounds. Submit manufactures instructions for placement of curing compound.

2.4.2 Nonshrink Grout

Nonshrink grout in accordance with ASTM C1107/C1107M.

2.4.3 Floor Finish Materials

2.4.3.1 Liquid Chemical Floor Hardeners and Sealers

a. Hardener must be a colorless aqueous solution containing a blend of inorganic silicate or siliconate material and proprietary components combined with a wetting agent; that penetrates, hardens, and densifies concrete surfaces. Submit manufactures instructions for placement of liquid chemical floor hardener.

b. Use concrete penetrating sealers with a low (maximum 100 grams/liter, less water and less exempt compounds) VOC content. Submit manufactures instructions for placement of sealers.

2.4.3.2 Abrasive Aggregate for Nonslip Aggregate Finish

[Aggregate must be packaged, factory-graded fused aluminum oxide grits, or it may be crushed emery containing not less than 40-percent aluminum oxide and not less than 25-percent ferric oxide. Aggregate must be rust proof and nonglazing and must be unaffected by freezing, moisture, and cleaning materials.

][Aggregate must be packaged, factory-graded, silicon carbide grits. Aggregate must be rust proof and must be unaffected by freezing, moisture, and cleaning materials.

][Aggregate must be well-graded in size from particles retained on No. 30 sieve 0.0236 inch to particles passing No. 8 sieve 0.0929 inch.

]2.4.3.3 Dry Materials for Colored Wear-Resistant Finish

[Provide materials that are packaged, dry, and a combination of materials formulated for producing colored and wear-resistant monolithic surface treatments; they must include portland cement, graded-quartz aggregate, coloring pigments, and dispersing agents. Provide coloring pigments that are finely ground, nonfacing mineral oxides prepared especially for the purpose and interground with the cement.

]2.4.3.4 Aggregate for Heavy-Duty Wear-Resistant Finish

[Provide aggregate that is traprock or emery, as follows:

[Traprock must be packaged, crushed, natural, fine-to-medium-grained, igneous rock, such as diabase, basalt, or black granite. Traprock aggregate must be well-graded in size from particles retained on No. 4 sieve 0.187 inch to particles passing 3/8-inch sieve.]

[Emery must be packaged, factory-graded, crushed, natural-emery ore, cubical or polyhedral in form, containing not less than 35-percent aluminum oxide and not less than 24-percent ferric oxide. Emery aggregate must be well graded in size from particles retained on No. 50 sieve 0.0118 inch to particles passing No. 8 sieve 0.0929 inch.]

][Provide iron aggregate, as follows:

Iron must be packaged, ground and graded cubicle iron particles with dispersing agents, formulated to blend with portland cement for producing wear-resistant monolithic surface treatments. Provide aggregate that is free of nonferrous metals, oil, grease, soluble alkaline compounds, rust, and impurities and must be well-graded in size from particles retained on No. 50 sieve 0.0118 inch to particles passing No. 8 sieve 0.0929 inch.

]2.4.3.5 Aggregate for Heavy-Duty Floor Topping

Provide emery (or may be traprock or traprock-screenings) fine aggregates, as specified.

Provide emery that is packaged, factory-graded, crushed natural emery ore containing not less than 35-percent aluminum oxide and not less than 24-percent ferric oxide. Provide aggregate that is cubical or polyhedral in form and does not change its physical or chemical nature in the presence of moisture. Grade aggregate to a fineness modulus of 3.9 to 4.0, with 100 percent passing 3/8-inch sieve and not less than 95 percent retained on No. 100 sieve. Deliver emery in moisture-resistant bags.

Provide traprock that is packaged, crushed, natural, fine- to medium-grained igneous rock such as diabase, basalt, or black granite. Uniformly grade coarse aggregate with 100 percent passing 1/2-inch sieve, 30 to 50 percent passing 3/8-inch sieve, 0 to 15 percent passing No. 4 sieve, and 0 to 5 percent passing No. 8 sieve.

Provide fine aggregate using traprock that conforms to ASTM C33/C33M, except gradation. Grade fine aggregate within the following limits:

SIEVE	PERCENT PASSING
3/8 in.	100
No. 4	95 to 100
No. 8	65 to 80
No. 16	45 to 65
No. 30	25 to 45
No. 50	5 to 15
No. 100	0 to 5

Deliver traprock coarse aggregate and fine aggregate in moisture-resistant bags.

2.4.4 Expansion/Contraction Joint Filler

ASTM D1751 or ASTM D1752 Type I or Type II. Material must be 1/2 inch thick.

2.4.5 Joint Sealants

Submit manufacturer's product data, indicating VOC content.

2.4.5.1 Horizontal Surfaces, 3 Percent Slope, Maximum

ASTM D6690 or ASTM C920, Type M, Class 25, Use T.

2.4.5.2 Vertical Surfaces Greater Than 3 Percent Slope

ASTM C920, Type M, Grade NS, Class 25, Use T NT..

2.4.5.3 Preformed Polychloroprene Elastomeric Type

ASTM D2628.

2.4.5.4 Lubricant for Preformed Compression Seals

ASTM D2835.

2.4.6 Vapor Retarder

ASTM E1745 Class C polyethylene sheeting, minimum 10 mil thickness or other equivalent material with a maximum permeance rating of 0.04 perms per ASTM E96/E96M.

Consider plastic vapor retarders and adhesives with a high recycled content, low toxicity low VOC (Volatile Organic Compounds) levels.

2.4.7 Dovetail Anchor Slot

Preformed metal slot approximately 1 inch by 1 inch of not less than 22 gage galvanized steel cast in concrete. Coordinate actual size and throat opening with dovetail anchors and provide with removable filler material.

2.5 CONCRETE MIX DESIGN

2.5.1 Properties and Requirements

a. Use materials and material combinations listed in this section and the contract documents.

b. Cementitious material content must be adequate for concrete to satisfy the specified requirements for strength, w/cm, durability, and finishability described in this section and the contract documents.

[The minimum cementitious material content for concrete used in floors must meet the following requirements:

Nominal maximum size of aggregate, in.	**Minimum cementitious material content, pounds per cubic yard**
1-1/2	470
1	520
3/4	540
3/8	610

]

c. Selected target slump must meet the requirements this section, the contract documents, and must not exceed 9 in. Concrete must not show visible signs of segregation.

d. The target slump must be enforced for the duration of the project. Determine the slump by ASTM C143/C143M. Slump tolerances must meet the requirements of ACI 117.

e. The nominal maximum size of coarse aggregate for a mixture must not exceed three-fourths of the minimum clear spacing between reinforcement, one-fifth of the narrowest dimension between sides of forms, or one-third of the thickness of slabs or toppings.

f. Concrete must be air entrained for members assigned to Exposure Class F1, F2, or F3. The total air content must be in accordance with the requirements of the paragraph titled DURABILITY.

g. Measure air content at the point of delivery in accordance with ASTM C173/C173M or ASTM C231/C231M.

h. Concrete for slabs to receive a hard-troweled finish must not contain an air-entraining admixture or have a total air content greater than 3 percent.

i. Concrete properties and requirements for each portion of the structure are specified in the table below. Refer to the paragraph titled DURABILITY for more details on exposure categories and their requirements.

	Minimum *f'c* psi	**Exposure Categories^**	**Miscellaneous Requirements**
Footings	4000 at 28 days	[S0] [S1] [S2] [S3]; [C0] [C1] [C2]; [W0] [W1]; [F0] [F1] [F2] [F3]	Max. slump: 6 in.
Slabs-on-ground	4000 at 28 days	[S0] [S1] [S2] [S3]; [C0] [C1] [C2]; [W0] [W1]; [F0] [F1] [F2] [F3]	

2.5.2 Durability

2.5.2.1 Alkali-Aggregate Reaction

Do not use any aggregate susceptible to alkali-carbonate reaction (ACR). Use one of the three options below for qualifying concrete mixtures to

reduce the potential of alkali-silica reaction (ASR):

a. For each aggregate used in concrete, the expansion result determined in accordance with ASTM C1293 must not exceed 0.04 percent at one year.

b. For each aggregate used in concrete, the expansion result of the aggregate and cementitious materials combination determined in accordance with ASTM C1567 must not exceed 0.10 percent at an age of 16 days.

c. Alkali content in concrete (LBA) must not exceed 4 pounds per cubic yard for moderately reactive aggregate or 3 pounds per cubic yard for highly reactive aggregate. Reactivity must be determined by testing in accordance with ASTM C1293 and categorized in accordance with ASTM C1778. Alkali content is calculated as follows:
LBA = (cement content, pounds per cubic yard) × (equivalent alkali content of portland cement in percent/100 percent)

2.5.2.2 Freezing and Thawing Resistance

a. Provide concrete meeting the following requirements based on exposure class assigned to members for freezing-and-thawing exposure in Contract Documents:

Exposure class	**Maximum *w/cm****	**Minimum *f'c*, psi**	**Air content**	**Additional Requirements**
F0	N/A	2500	N/A	
F1	0.55	3500	Depends on aggregate size	N/A
F2	0.45	4500	Depends on aggregate size	See limits on maximum cementitious material by mass
F3	0.40	5000	Depends on aggregate size	See limits on maximum cementitious material by mass
F3 plain concrete	0.45	4500	Depends on aggregate size	See limits on maximum cementitious material by mass

*The maximum *w/cm* limits do not apply to lightweight concrete.

b. Concrete must be air entrained for members assigned to Exposure Class F1, F2, or F3. The total air content must meet the requirements of the following table:

Nominal maximum aggregate size, in.	Total air content, percent*^	
	Exposure Class F2 and F3	Exposure Class F1
3/8	7.5	6.0
1/2	7.0	5.5
3/4	6.0	5.0
1	6.0	4.5
1-1/2	5.5	4.5
2	5.0	4.0
3	5.5	3.5

*Tolerance on air content as delivered must be plus/minus 1.5 percent.
^For f'c greater than 5000 psi, reducing air content by 1.0 percentage point is acceptable.

c. Submit documentation verifying compliance with specified requirements.

d. For sections of the structure that are assigned Exposure Class F3, submit certification on cement composition verifying that concrete mixture meets the requirements of the following table:

Cementitious material	Maximum percent of total cementitious material by mass*
Fly ash or other pozzolans conforming to ASTM C618	25
Slag cement conforming to ASTM C989/C989M	50
Silica fume conforming to ASTM C1240	10
Total of fly ash or other pozzolans, slag cement, and silica fume	50^
Total of fly ash or other pozzolans and silica fume	35^

*Total cementitious material also includes ASTM C150/C150M, ASTM C595/C595M, ASTM C845/C845M, and ASTM C1157/C1157M cement. The maximum percentages above must include:
i. Fly ash or other pozzolans present in ASTM C1157/C1157M or ASTM C595/C595M Type IP blended cement.

ii. Slag cement present in ASTM C1157/C1157M or ASTM C595/C595M Type IS blended cement.
iii. Silica fume conforming to ASTM C1240 present in ASTM C1157/C1157M or ASTM C595/C595M Type IP blended cement.
^Fly ash or other pozzolans and silica fume must constitute no more than 25 percent and 10 percent, respectively, of the total mass of the cementitious materials.

2.5.2.3 Corrosion and Chloride Content

a. Provide concrete meeting the requirements of the following table based on the exposure class assigned to members requiring protection against reinforcement corrosion in Contract Documents.

b. Submit documentation verifying compliance with specified requirements.

c. Water-soluble chloride ion content contributed from constituents including water, aggregates, cementitious materials, and admixtures must be determined for the concrete mixture by ASTM C1218/C1218M at age between 28 and 42 days.

d. The maximum water-soluble chloride ion (Cl-) content in concrete, percent by mass of cement is as follows:

Exposure class	**Maximum *w/cm****	**Minimum f'c, psi**	**Maximum water-soluble chloride ion (CL-) content in concrete, percent by mass of cement**
Reinforced concrete			
C0	N/A	2500	1.00
C1	N/A	2500	0.30
C2	0.4	5000	0.15
Prestressed concrete			
C0	N/A	2500	0.06
C1	N/A	2500	0.06
C2	0.4	5000	0.06

*The maximum w/cm limits do not apply to lightweight concrete.

2.5.2.4 Sulfate Resistance

a. Provide concrete meeting the requirements of the following table based on the exposure class assigned to members for sulfate exposure.

Exposure class	**Maximum w/cm**	**Minimum f'c, psi**	**Required cementitious materials-types**			**Calcium chloride admixture**
			ASTM C150/C150M	**ASTM C595/C595M**	**ASTM C1157/C1157M**	
S0	N/A	2500	N/A	N/A	N/A	No restrictions

Exposure class	Maximum w/cm	Minimum f'c, psi	Required cementitious materials-types			Calcium chloride admixture
			ASTM C150/C150M	ASTM C595/C595M	ASTM C1157/C1157M	
S1	0.50	4000	II*^	IP(MS); IS(<70)(MS); IT(MS)	MS	No restrictions
S2	0.45	4500	IV^	IP(HS); IS(<70)(HS); IT(HS)	HS	Not permitted
S3	0.45	4500	V + pozzolan or slag cement**	IP(HS)+ pozzolan or slag cement^; IS (<70)(HS) + pozzolan or slag cement^; IT (HS) + pozzolan or slag cement**	HS + pozzolan or slag cement**	Not permitted

* For seawater exposure, other types of portland cements with tricalcium aluminate (C3A) contents up to 10 percent are acceptable if the w/cm does not exceed 0.40.
** The amount of the specific source of the pozzolan or slag cement to be used shall be at least the amount determined by test or service record to improve sulfate resistance when used in concrete containing Type V cement. Alternatively, the amount of the specific source of the pozzolan or slag used shall not be less than the amount tested in accordance with ASTM C1012/C1012M and meeting the requirements maximum expansion requirements listed herein.
^ Other available types of cement, such as Type III or Type I, are acceptable in exposure classes S1 or S2 if the C3A contents are less than 8 or 5 percent, respectively.

b. The maximum w/cm limits for sulfate exposure do not apply to lightweight concrete.

c. Alternative combinations of cementitious materials of those listed in this paragraph are acceptable if they meet the maximum expansion requirements listed in the following table:

Exposure class	Maximum expansion when tested using ASTM C1012/C1012M		
	At 6 months	At 6 months	At 18 months
S1	0.10 percent	N/A	N/A
S2	0.05 percent	0.10 percent^	N/A

Exposure class	Maximum expansion when tested using ASTM C1012/C1012M		
	At 6 months	At 6 months	At 18 months
S3	N/A	N/A	0.10 percent

^The 12-month expansion limit applies only when the measured expansion exceeds the 6-month maximum expansion limit.

2.5.2.5 Concrete Temperature

The temperature of concrete as delivered must not exceed 95°F.

2.5.2.6 Concrete permeability

a. Provide concrete meeting the requirements of the following table based on exposure class assigned to members requiring low permeability in the Contract Documents.

Exposure class	Maximum *w/cm**	Minimum f'c, psi	Additional minimum requirements
W0	N/A	2500	None
W1	0.5	4000	None

*The maximum w/cm limits do not apply to lightweight concrete.

b. Submit documentation verifying compliance with specified requirements.

2.5.3 Contractor's Option for Material Only

At the option of the Contractor, those applicable material sections of NC DOT RBS for Class A strength concrete must govern in lieu of this specification for concrete. Do not change the selected option during the course of the work.

2.5.4 Trial Mixtures

Trial mixtures must be in accordance to ACI 301.

2.5.5 Ready-Mix Concrete

Provide concrete that meets the requirements of ASTM C94/C94M.

Ready-mixed concrete manufacturer must provide duplicate delivery tickets with each load of concrete delivered. Provide delivery tickets with the following information in addition to that required by ASTM C94/C94M:

a. Type and brand cement

b. Cement and supplementary cementitious materials content in 94-pound

bags per cubic yard of concrete

c. Maximum size of aggregate

d. Amount and brand name of admixtures

e. Total water content expressed by water cementitious material ratio

2.6 REINFORCEMENT

a. Bend reinforcement cold. Fabricate reinforcement in accordance with fabricating tolerances of ACI 117.

b. When handling and storing coated reinforcement, use equipment and methods that do not damage the coating. If stored outdoors for more than 2 months, cover coated reinforcement with opaque protective material.

c. Submit manufacturer's certified test report for reinforcement.

d. Submit placing drawings showing fabrication dimensions and placement locations of reinforcement and reinforcement supports. Placing drawings must indicate locations of splices, lengths of lap splices, and details of mechanical and welded splices.

e. Submit request with locations and details of splices not indicated in Contract Documents.

f. Submit request to place column dowels without using templates.

h. Submit request for field cutting, including location and type of bar to be cut and reason field cutting is required.

2.6.1 Reinforcing Bars

a. Reinforcing bars must be deformed, except spirals, load-transfer dowels, and welded wire reinforcement, which may be plain.

b. ASTM A615/A615M with the bars marked A, Grade 60; or ASTM A996/A996M with the bars marked R, Grade 60, or marked A, Grade 60.

c. [Reinforcing bars may contain post-consumer or post-industrial recycled content.] [Submit documentation indicating percentage of post-industrial and post-consumer recycled content per unit of product. Indicate relative dollar value of recycled content products to total dollar value of products included in project.]

d. Submit mill certificates for reinforcing bars.

2.6.1.1 Galvanized Reinforcing Bars

a. Provide zinc-coated (galvanized) reinforcing bars that conform to ASTM A767/A767M, Class 1 as required by the contract Documents.

b. Coating damage incurred during shipment, handling, and placing of zinc-coated (galvanized) reinforcing bars must be repaired in accordance with ASTM A780/A780M. Damaged areas must not exceed 2 percent of surface area in each linear foot of each bar or bar must not be used. The 2 percent limit on maximum allowed damaged coating

area must include previously repaired areas damaged before shipment as required by ASTM A767/A767M.

2.6.1.2 Epoxy-Coated Reinforcing Bars

a. Provide epoxy-coated reinforcing bars that conform to ASTM A934/A934M, Grade 60 .

b. Coatings must be applied in plants that are certified in accordance with Concrete Reinforcing Steel Institute (CRSI) Epoxy Coating Plant Certification Program or an equivalent program acceptable to the contracting officer.

c. Coating damage incurred during shipment, storage, handling, and placing of epoxy-coated reinforcing bars must be repaired. Repair damaged coating areas with patching material conforming to ASTM A775/A775M or ASTM A934/A934M as applicable and in accordance with material manufacturer's written recommendations. Damaged coating area must not exceed 2 percent of surface area in each linear foot of each bar or bar must not be used. The 2 percent limit on damaged coating area must include repaired areas damaged before shipment as required by ASTM A775/A775M or ASTM A934/A934M as applicable. Fading of coating color shall not be cause for rejection of epoxy-coated reinforcing bars.

d. Submit concrete Reinforcing Steel Institute (CRSI) Epoxy Coating Plant Certification inspection and quality-control program of plant applying epoxy coating if proposed plant is not certified in accordance with CRSI Epoxy Coating Plant Certification Program.

2.6.1.3 Dual-coated Reinforcing Bars

a. Zinc and epoxy dual-coated reinforcing bars must conform to ASTM A1055/A1055M

b. Coating damage incurred during shipment, storage, handling, and placing of zinc and epoxy dual-coated reinforcing bars must be repaired. Repair damaged coating areas with patching material conforming to ASTM A1055/A1055M and in accordance with material manufacturer's written recommendations. Damaged coating area must not exceed 2 percent of surface area in each linear foot of each bar or bar must not be used. The 2 percent limit on damaged coating area must include repaired areas damaged before shipment as required by ASTM A1055/A1055M. Fading of coating color shall not be cause for rejection of zinc and epoxy dual-coated reinforcing bars.

2.6.1.4 Stainless Steel Reinforcing Bars

Stainless steel bars must meet the requirements of ASTM A955/A955M.

2.6.1.5 Headed Reinforcing Bars

Headed reinforcing bars must conform to ASTM A970/A970M including Annex A1, and other specified requirements.

2.6.1.6 Bar Mats

a. Bar mats must conform to ASTM A184/A184M.

b. If coated bar mats are required, repair damaged coating as required in the paragraph titled GALVANIZED REINFORCING BARS EPOXY-COATED REINFORCING BARS and DUAL-COATED REINFORCING BARS.

2.6.1.7 Headed Shear Stud Reinforcement

Headed studs and headed stud assemblies must conform to ASTM A1044/A1044M.

2.6.2 Mechanical Reinforcing Bar Connectors

a. Provide 125 percent minimum yield strength of the reinforcement bar.

b. Mechanical splices for galvanized reinforcing bars must be galvanized or coated with dielectric material.

c. Mechanical splices used with epoxy-coated or dual-coated reinforcing bars must be coated with dielectric material.

d. Submit data on mechanical splices demonstrating compliance with this paragraph.

2.6.3 Wire

a. Provide flat sheets of welded wire reinforcement for slabs and toppings.

b. Plain or deformed steel wire must conform to ASTM A1064/A1064M.

c. Stainless steel wire must conform to ASTM A1022/A1022M.

d. Epoxy-coated wire must conform to ASTM A884/A884M. Coating damage incurred during shipment, storage, handling, and placing of epoxy-coated wires must be repaired. Repair damaged coating areas with patching material in accordance with material manufacturer's written recommendations. If damaged area exceeds 2 percent of surface area in each linear foot of each wire, wire must not be used. The 2 percent limit on damaged coating area must include repaired areas damaged before shipment as required by ASTM A884/A884M. Fading of coating color shall not be cause for rejection of epoxy-coated wire reinforcement.

2.6.4 Welded wire reinforcement

a. Use welded wire reinforcement specified in Contract Documents and conforming to one or more of the specifications given herein.

b. Plain welded wire reinforcement must conform to ASTM A1064/A1064M, with welded intersections spaced no greater than 12 in. apart in direction of principal reinforcement.

c. Deformed welded wire reinforcement must conform to ASTM A1064/A1064M, with welded intersections spaced no greater than 16 in. apart in direction of principal reinforcement.

d. Epoxy-coated welded wire reinforcement must conform to ASTM A884/A884M. Coating damage incurred during shipment, storage, handling, and placing of epoxy-coated welded wire reinforcement must be repaired in accordance with ASTM A884/A884M. Repair damaged coating areas with patching material in accordance with material manufacturer's written

recommendations. If damaged area exceeds 2 percent of surface area in each linear foot of each wire or welded wire reinforcement, the sheet containing the damaged area must not be used. The 2 percent limit on damaged coating area must include repaired areas damaged before shipment as required by ASTM A884/A884M. Fading of coating color shall not be cause for rejection of epoxy-coated welded wire reinforcement.

e. Stainless steel welded wire reinforcement must conform to ASTM A1022/A1022M.

f. Zinc-coated (galvanized) welded wire reinforcement must conform to ASTM A1060/A1060M. Coating damage incurred during shipment, storage, handling, and placing of zinc-coated (galvanized) welded wire reinforcement must be repaired in accordance with ASTM A780/A780M. If damaged area exceeds 2 percent of surface area in each linear foot of each wire or welded wire reinforcement, the sheet containing the damaged area must not be used. The 2 percent limit on damaged coating area shall include repaired areas damaged before shipment as required by ASTM A1060/A1060M.

2.6.5 Reinforcing Bar Supports

a. Provide reinforcement support types within structure as required by Contract Documents. Reinforcement supports must conform to CRSI RB4.1. Submit description of reinforcement supports and materials for fastening coated reinforcement if not in conformance with CRSI RB4.1.

b. For epoxy-coated reinforcement, use epoxy-coated or other dielectric-polymer-coated wire bar support.

c. Legs of supports in contact with formwork must be hot-dip galvanized, or plastic coated after fabrication, or stainless-steel bar supports.

d. See Section 01 33 29 SUSTAINABILITY REPORTING for cumulative total recycled content requirements. Plastic and steel may contain post-consumer or post-industrial recycled content.

2.6.6 Dowels for Load Transfer in Floors

Provide greased dowels for load transfer in floors of the type, design, weight, and dimensions indicated. Provide dowel bars that are plain-billet steel conforming to ASTM A615/A615M, Grade 40. Provide dowel pipe that is steel conforming to ASTM A53/A53M.

Plate dowels must conform to ASTM A36/A36M, and must be of size and spacing indicated. Plate dowel system must minimize shrinkage restraint by using a tapered shape or formed void or by having compressible material on the vertical faces with a thin bond breaker on the top and bottom dowel surfaces.

2.6.7 Welding

a. Provide weldable reinforcing bars that conform to ASTM A706/A706M and ASTM A615/A615M and Supplement S1, Grade 60, except that the maximum carbon content must be 0.55 percent.

b. Comply with AWS D1.4/D1.4M unless otherwise specified. Do not tack weld reinforcing bars.

c. Welded assemblies of steel reinforcement produced under factory conditions, such as welded wire reinforcement, bar mats, and deformed bar anchors, are allowed.

d. After completing welds on zinc-coated (galvanized), epoxy-coated, or zinc and epoxy dual-coated reinforcement, coat welds and repair coating damage as previously specified.

PART 3 EXECUTION

3.1 EXAMINATION

a. Do not begin installation until substrates have been properly constructed; verify that substrates are level.

b. If substrate preparation is the responsibility of another installer, notify Contracting Officer of unsatisfactory preparation before processing.

c. Check field dimensions before beginning installation. If dimensions vary too much from design dimensions for proper installation, notify Contracting Officer and wait for instructions before beginning installation.

3.2 PREPARATION

Determine quantity of concrete needed and minimize the production of excess concrete. Designate locations or uses for potential excess concrete before the concrete is poured.

3.2.1 General

a. Surfaces against which concrete is to be placed must be free of debris, loose material, standing water, snow, ice, and other deleterious substances before start of concrete placing.

b. Remove standing water without washing over freshly deposited concrete. Divert flow of water through side drains provided for such purpose.

3.2.2 Subgrade Under Foundations and Footings

a. When subgrade material is semi-porous and dry, sprinkle subgrade surface with water as required to eliminate suction at the time concrete is deposited, or seal subgrade surface by covering surface with specified vapor retarder.

b. When subgrade material is porous, seal subgrade surface by covering surface with specified vapor retarder.

3.2.3 Subgrade Under Slabs on Ground

a. Before construction of slabs on ground, have underground work on pipes and conduits completed and approved.

b. Previously constructed subgrade or fill must be cleaned of foreign materials

c. Finish surface of capillary water barrier under interior slabs on

ground must not show deviation in excess of 1/4 inch when tested with a 10-foot straightedge parallel with and at right angles to building lines.

d. Finished surface of subgrade or fill under exterior slabs on ground must not be more than 0.02-foot above or 0.10-foot below elevation indicated.

3.2.4 Edge Forms and Screed Strips for Slabs

a. Set edge forms or bulkheads and intermediate screed strips for slabs to obtain indicated elevations and contours in finished slab surface and must be strong enough to support vibrating bridge screeds or roller pipe screeds if nature of specified slab finish requires use of such equipment.

b. Align concrete surface to elevation of screed strips by use of strike-off templates or approved compacting-type screeds.

3.2.5 Reinforcement and Other Embedded Items

a. Secure reinforcement, joint materials, and other embedded materials in position, inspected, and approved before start of concrete placing.

b. When concrete is placed, reinforcement must be free of materials deleterious to bond. Reinforcement with rust, mill scale, or a combination of both will be considered satisfactory, provided minimum nominal dimensions, nominal weight, and minimum average height of deformations of a hand-wire-brushed test specimen are not less than applicable ASTM specification requirements.

3.3 FORMS

a. Provide forms, shoring, and scaffolding for concrete placement. Set forms mortar-tight and true to line and grade.

b. Chamfer above grade exposed joints, edges, and external corners of concrete 0.75 inch. Place chamfer strips in corners of formwork to produce beveled edges on permanently exposed surfaces. Do not bevel reentrant corners or edges of formed joints of concrete.

c. Provide formwork with clean-out openings to permit inspection and removal of debris.

d. Inspect formwork and remove foreign material before concrete is placed.

e. At construction joints, lap form-facing materials over the concrete of previous placement. Ensure formwork is placed against hardened concrete so offsets at construction joints conform to specified tolerances.

f. Provide positive means of adjustment (such as wedges or jacks) of shores and struts. Do not make adjustments in formwork after concrete has reached initial setting. Brace formwork to resist lateral deflection and lateral instability.

g. Fasten form wedges in place after final adjustment of forms and before concrete placement.

h. Provide anchoring and bracing to control upward and lateral movement of formwork system.

i. Construct formwork for openings to facilitate removal and to produce opening dimensions as specified and within tolerances.

j. Provide runways for moving equipment. Support runways directly on formwork or structural members. Do not support runways on reinforcement. Loading applied by runways must not exceed capacity of formwork or structural members.

k. Position and support expansion joint materials, waterstops, and other embedded items to prevent displacement. Fill voids in sleeves, inserts, and anchor slots temporarily with removable material to prevent concrete entry into voids.

l. Clean surfaces of formwork and embedded materials of mortar, grout, and foreign materials before concrete placement.

3.3.1 Coating

a. Cover formwork surfaces with an acceptable material that inhibits bond with concrete.

b. If formwork release agent is used, apply to formwork surfaces in accordance with manufacturer's recommendations before placing reinforcement. Remove excess release agent on formwork prior to concrete placement.

c. Do not allow formwork release agent to contact reinforcement or hardened concrete against which fresh concrete is to be placed.

3.3.2 Reshoring

a. Do not allow structural members to be loaded with combined dead and construction loads in excess of loads indicated in the accepted procedure.

b. Install and remove reshores or backshores in accordance with accepted procedure.

c. For floors supporting shores under newly placed concrete, either leave original supporting shores in place, or install reshores or backshores. Shoring system and supporting slabs must resist anticipated loads. Locate reshores and backshores directly under a shore position or as indicated on formwork shop drawings.

d. In multistory buildings, place reshoring or backshoring over a sufficient number of stories to distribute weight of newly placed concrete, forms, and construction live loads.

3.3.3 Reuse

a. Reuse forms providing the structural integrity of concrete and the aesthetics of exposed concrete are not compromised.

b. Wood forms must not be clogged with paste and must be capable of absorbing high water-cementitious material ratio paste.

c. Remove leaked mortar from formwork joints before reuse.

3.3.4 Forms for Standard Rough Form Finish

Provide formwork in accordance with ACI 301 Section 5 with a surface finish, SF-1.0, for formed surfaces that are to be concealed by other construction.

3.3.5 Forms for Standard Smooth Form Finish

Provide formwork in accordance with ACI 301 Section 5 with a surface finish, SF-3.0, for formed surfaces that are exposed to view. Do not provide mockup of concrete surface appearance and texture.

3.3.6 Form Ties

a. For post-tensioned structures, do not remove formwork supports until stressing records have been accepted by the Contracting Officer.

b. After ends or end fasteners of form ties have been removed, repair tie holes in accordance with ACI 301 Section 5 requirements.

3.3.7 Forms for Concrete Pan Joist Construction

Pan-form units for one-way or two-way concrete joist and slab construction must be factory-fabricated units of the approximate section indicated. Units must consist of steel or molded fiberglass concrete form pans. Closure units must be furnished as required.

3.3.8 Tolerances for Form Construction

a. Construct formwork so concrete surfaces conform to tolerances in ACI 117.

b. Position and secure sleeves, inserts, anchors, and other embedded items such that embedded items are positioned within ACI 117 tolerances.

c. To maintain specified elevation and thickness within tolerances, install formwork to compensate for deflection and anticipated settlement in formwork during concrete placement. Set formwork and intermediate screed strips for slabs to produce designated elevation, camber, and contour of finished surface before formwork removal. If specified finish requires use of vibrating screeds or roller pipe screeds, ensure that edge forms and screed strips are strong enough to support such equipment.

3.3.9 Removal of Forms and Supports

a. If vertical formed surfaces require finishing, remove forms as soon as removal operations will not damage concrete.

b. Remove top forms on sloping surfaces of concrete as soon as removal will not allow concrete to sag. Perform repairs and finishing operations required. If forms are removed before end of specified curing period, provide curing and protection.

c. Do not damage concrete during removal of vertical formwork for columns, walls, and sides of beams. Perform needed repair and

finishing operations required on vertical surfaces. If forms are removed before end of specified curing period, provide curing and protection.

d. Leave formwork and shoring in place to support construction loads and weight of concrete in beams, slabs, and other structural members until in-place required strength of concrete is reached.

e. Form-facing material and horizontal facing support members may be removed before in-place concrete reaches specified compressive strength if shores and other supports are designed to allow facing removal without deflection of supported slab or member.

3.3.10 Strength of Concrete Required for Removal of Formwork

If removal of formwork, reshoring, or backshoring is based on concrete reaching a specified in-place strength, mold and field-cure cylinders in accordance with ASTM C31/C31M. Test cylinders in accordance with ASTM C39/C39M. Alternatively, use one or more of the methods listed herein to evaluate in-place concrete strength for formwork removal.

a. Tests of cast-in-place cylinders in accordance with ASTM C873/C873M. This option is limited to slabs with concrete depths from 5 to 12 in.

b. Penetration resistance in accordance with ASTM C803/C803M.

c. Pullout strength in accordance with ASTM C900.

d. Maturity method in accordance with ASTM C1074. Submit maturity method data using project materials and concrete mix proportions used on the project to demonstrate the correlation between maturity and compressive strength of laboratory cured test specimens to the Contracting Officer.

3.4 WATERSTOP INSTALLATION AND SPLICES

a. Provide waterstops in construction joints as indicated.

b. Install formwork to accommodate waterstop materials. Locate waterstops in joints where indicated in Contract Documents. Minimize number of splices in waterstop. Splice waterstops in accordance with manufacturer's written instructions. Install factory-manufactured premolded mitered corners.

c. Install waterstops to form a continuous diaphragm in each joint. Make adequate provisions to support and protect waterstops during progress of work. Protect waterstops protruding from joints from damage.

3.4.1 PVC Waterstop

Make splices by heat sealing the adjacent waterstop edges together using a thermoplastic splicing iron utilizing a non-stick surface specifically designed for waterstop welding. Reform waterstops at splices with a remolding iron with ribs or corrugations to match the pattern of the waterstop. The spliced area, when cooled, must show no signs of separation, holes, or other imperfections when bent by hand in as sharp an angle as possible.

3.4.2 Rubber Waterstop

Rubber waterstops must be spliced using cold bond adhesive as recommended by the manufacturer.

3.4.3 Thermoplastic Elastomeric Rubber Waterstop

Fittings must be shop made using a machine specifically designed to mechanically weld the waterstop. A portable power saw must be used to miter or straight cut the ends to be joined to ensure good alignment and contact between joined surfaces. Maintain continuity of the characteristic features of the cross section of the waterstop (for example ribs, tabular center axis, and protrusions) across the splice.

3.4.4 Hydrophilic Waterstop

Miter cut ends to be joined with sharp knife or shears. The ends must be adhered with adhesive.

3.5 PLACING REINFORCEMENT AND MISCELLANEOUS MATERIALS

a. Unless otherwise specified, placing reinforcement and miscellaneous materials must be in accordance to ACI 301. Provide bars, welded wire reinforcement, wire ties, supports, and other devices necessary to install and secure reinforcement.

b. Reinforcement must not have rust, scale, oil, grease, clay, or foreign substances that would reduce the bond. Rusting of reinforcement is a basis of rejection if the effective cross-sectional area or the nominal weight per unit length has been reduced. Remove loose rust prior to placing steel. Tack welding is prohibited.

c. Nonprestressed cast-in-place concrete members must have concrete cover for reinforcement given in the following table:

Concrete Exposure	**Member**	**Reinforcement**	**Specified cover, in.**
Cast against and permanently in contact with ground	All	All	3
Exposed to weather or in contact with ground	All	No. 6 through No. 18 bars	2
		No. 5 bar, W31 or D31 wire, and smaller	1-1/2

Concrete Exposure	Member	Reinforcement	Specified cover, in.
Not exposed to weather or in contact with ground	Slabs, joists, and walls	No. 14 and No. 18 bars	1-1/2
		No. 11 bar and smaller	3/4
	Beams, columns, pedestals, and tension ties	Primary reinforcement, stirrups, ties, spirals, and hoops	1-1/2

d. Cast-in-place prestressed concrete members must have concrete cover for reinforcement, ducts, and end fittings given in the following table:

Concrete	Member	Reinforcement	Specified
Cast against and permanently in contact with ground	All	All	3
Exposed to weather or in contact with ground	Slabs, joists, and walls	All	1
	All other	All	1-1/2
Not exposed to weather or in contact with ground	Slabs, joists, and walls	All	3/4
	Beams, columns, and tension ties	Primary reinforcement	1-1/2
		Stirrups, ties, spirals, and hoops	1

e. Precast nonprestressed or prestressed concrete members manufactured under plant conditions must have concrete cover for reinforcement, ducts, and end fittings given in the following table:

Concrete Exposure	Member	Reinforcement	Specified cover, in.
Exposed to weather or in contact with ground	Walls	No. 14 and No. 18 bars; tendons larger than 1-1/2 in. diameter	1-1/2
		No. 11 bars and smaller; W31 and D31 wire, and smaller; tendons and strands 1-1/2 in.	3/4
	All other	No. 14 and No. 18 bars; tendons larger than 1-1/2 in.	2
		No. 6 through No. 11 bars; tendons and strands larger than 5/8 in. diameter through 1-1/2 in.	1-1/2
		No. 5 bar, W31 or D31 wire, and smaller; tendons and strands 5/8 in. diameter and smaller	1-1/4

Concrete Exposure	Member	Reinforcement	Specified cover, in.
Not exposed to weather or in contact with ground	Slabs, joists, and walls	No. 14 and No. 18 bars; tendons larger than 1-1/2 in. diameter	1-1/4
		Tendons and strands 1-1/2 in. diameter and smaller	3/4
		No. 11 bar, W31 or D31	5/8
	Beams, columns, pedestals, and tension ties	Primary reinforcement	Greater of bar diameter and 5/8 and need not exceed 1-1/2
		Stirrups, ties, spirals, and hoops	3/8

3.5.1 General

Provide details of reinforcement that are in accordance with the Contract Documents.

3.5.2 Vapor Retarder

a. Install in accordance with ASTM E1643. Provide beneath the on-grade concrete floor slab. Use the greatest widths and lengths practicable to eliminate joints wherever possible. Lap joints a minimum of 12

inches and tape.

b. Remove torn, punctured, or damaged vapor retarder material and provide with new vapor retarder prior to placing concrete. Concrete placement must not damage vapor retarder . Place a 2 inch layer of clean concrete sand on vapor retarder before placing concrete.

3.5.3 Perimeter Insulation

Install perimeter insulation at locations indicated. Adhesive must be used where insulation is applied to the interior surface of foundation walls and may be used for exterior application.

3.5.4 Reinforcement Supports

Provide reinforcement support in accordance with CRSI RB4.1 and ACI 301 Section 3 requirements. Supports for coated or galvanized bars must also be coated with electrically compatible material for a distance of at least 2 inches beyond the point of contact with the bars.

3.5.5 Epoxy Coated Reinforcing

Epoxy Coated Reinforcing must meet the requirements of ASTM A934/A934M including Appendix X2, "Guidelines for Job Site Practices" except as otherwise specified herein.

3.5.5.1 Epoxy Coated Reinforcing Steel Placement and Coating Repair

Carefully handle and install bars to minimize job site patching. Use the same precautions as described in the paragraph titled EPOXY-COATED REINFORCING BARS. Do not drag bars over other bars or over abrasive surfaces. Keep bar free of dirt and grit. When possible, assemble reinforcement as tied cages prior to final placement into the forms. Support assembled cages on padded supports. It is not expected that coated bars, when in final position ready for concrete placement, are completely free of damaged areas; however, excessive nicks and scrapes which expose steel is cause for rejection. Criteria for defects which require repair and for those that do not require repair are as indicated. Inspect for defects and provide required repairs prior to assembly. After assembly, reinspect and provide final repairs.

a. Immediately prior to application of the patching material, manually remove any rust and debonded coating from the reinforcement by suitable techniques employing devices such as wire brushes and emery paper. Exercise cars during this surface preparation so that the damaged areas are not enlarged more than necessary to accomplish the repair. Clean damaged areas of dirt, debris, oil, and similar materials prior to application of the patching material.

b. Do repair and patching in accordance with the patching material manufacturer's recommendations. These recommendations, including cure times, must be available at the job site at all times.

c. Allow adequate time for the patching materials to cure in accordance with the manufacturer's recommendation prior to concrete placement.

d. Rinse placed reinforcing bars with fresh water to remove chloride contamination prior to placing concrete.

3.5.6 Splicing

As indicated in the Contract Documents. For splices not indicated follow ACI 301. Do not splice at points of maximum stress. Overlap welded wire reinforcement the spacing of the cross wires, plus 2 inches. AWS D1.4/D1.4M. Approve welded splices prior to use. Repair the cut ends of hot-dipped galvanized reinforcement steel to completely coat exposed steel, ASTM A780/A780M.

3.5.7 Future Bonding

Plug exposed, threaded, mechanical reinforcement bar connectors with a greased bolt. Provide bolt threads that match the connector. Countersink the connector in the concrete. Caulk the depression after the bolt is installed.

3.5.8 Setting Miscellaneous Material

Place and secure anchors and bolts, pipe sleeves, conduits, and other such items in position before concrete placement and support against displacement. Plumb anchor bolts and check location and elevation. Temporarily fill voids in sleeves with readily removable material to prevent the entry of concrete.

3.5.9 Fabrication

Shop fabricate reinforcing bars to conform to shapes and dimensions indicated for reinforcement, and as follows:

a. Provide fabrication tolerances that are in accordance with ACI 117.

b. Provide hooks and bends that are in accordance with the Contract Documents.

Reinforcement must be bent cold to shapes as indicated. Bending must be done in the shop. Rebending of a reinforcing bar that has been bent incorrectly is not be permitted. Bending must be in accordance with standard approved practice and by approved machine methods.

Deliver reinforcing bars bundled, tagged, and marked. Tags must be metal with bar size, length, mark, and other information pressed in by machine. Marks must correspond with those used on the placing drawings.

Do not use reinforcement that has any of the following defects:

a. Bar lengths, depths, and bends beyond specified fabrication tolerances

b. Bends or kinks not indicated on drawings or approved shop drawings

c. Bars with reduced cross-section due to rusting or other cause

Replace defective reinforcement with new reinforcement having required shape, form, and cross-section area.

3.5.10 Placing Reinforcement

Place reinforcement in accordance with ACI 301.

For slabs on grade (over earth or over capillary water barrier) and for

footing reinforcement, support bars or welded wire reinforcement on precast concrete blocks, spaced at intervals required by size of reinforcement, to keep reinforcement the minimum height specified above the underside of slab or footing.

For slabs other than on grade, supports for which any portion is less than 1 inch from concrete surfaces that are exposed to view or to be painted must be of precast concrete units, plastic-coated steel, or stainless steel protected bar supports. Precast concrete units must be wedge shaped, not larger than 3-1/2 by 3-1/2 inches, and of thickness equal to that indicated for concrete protection of reinforcement. Provide precast units that have cast-in galvanized tie wire hooked for anchorage and blend with concrete surfaces after finishing is completed.

Provide reinforcement that is supported and secured together to prevent displacement by construction loads or by placing of wet concrete, and as follows:

a. Provide supports for reinforcing bars that are sufficient in number and have sufficient strength to carry the reinforcement they support, and in accordance with ACI 301 and CRSI 10MSP. Do not use supports to support runways for concrete conveying equipment and similar construction loads.

b. Equip supports on ground and similar surfaces with sand-plates.

c. Support welded wire reinforcement as required for reinforcing bars.

d. Secure reinforcements to supports by means of tie wire. Wire must be black, soft iron wire, not less than 16 gage.

e. Reinforcement must be accurately placed, securely tied at intersections, and held in position during placing of concrete by spacers, chairs, or other approved supports. Point wire-tie ends away from the form. Unless otherwise indicated, numbers, type, and spacing of supports must conform to the Contract Documents.

f. Bending of reinforcing bars partially embedded in concrete is permitted only as specified in the Contract Documents.

3.5.11 Spacing of Reinforcing Bars

a. Spacing must be as indicated in the Contract Documents.

b. Reinforcing bars may be relocated to avoid interference with other reinforcement, or with conduit, pipe, or other embedded items. If any reinforcing bar is moved a distance exceeding one bar diameter or specified placing tolerance, resulting rearrangement of reinforcement is subject to preapproval by the Contracting Officer.

3.5.12 Concrete Protection for Reinforcement

Additional concrete protection must be in accordance with the Contract Documents.

3.5.13 Welding

Welding must be in accordance with AWS D1.4/D1.4M.

3.6 BATCHING, MEASURING, MIXING, AND TRANSPORTING CONCRETE

In accordance with ASTM C94/C94M, ACI 301, ACI 302.1R and ACI 304R, except as modified herein. Batching equipment must be such that the concrete ingredients are consistently measured within the following tolerances: 1 percent for cement and water, 2 percent for aggregate, and 3 percent for admixtures. Furnish mandatory batch ticket information for each load of ready mix concrete.

3.6.1 Measuring

Make measurements at intervals as specified in paragraphs SAMPLING and TESTING.

3.6.2 Mixing

a. Mix concrete in accordance with ASTM C94/C94M, ACI 301 and ACI 304R.

b. Machine mix concrete. Begin mixing within 30 minutes after the cement has been added to the aggregates. Place concrete within 90 minutes of either addition of mixing water to cement and aggregates or addition of cement to aggregates if the air temperature is less than 84 degrees F.

c. Reduce mixing time and place concrete within 60 minutes if the air temperature is greater than 84 degrees F except as follows: if set retarding admixture is used and slump requirements can be met, limit for placing concrete may remain at 90 minutes. Additional water may be added, provided that both the specified maximum slump and submitted water-cementitious material ratio are not exceeded and the required concrete strength is still met. When additional water is added, an additional 30 revolutions of the mixer at mixing speed is required.

d. If the entrained air content falls below the specified limit, add a sufficient quantity of admixture to bring the entrained air content within the specified limits. Dissolve admixtures in the mixing water and mix in the drum to uniformly distribute the admixture throughout the batch. Do not reconstitute concrete that has begun to solidify.

e. When fibers are used, add fibers together with the aggregates and never as the first component in the mixer. Fibers must be dispensed into the mixing system using appropriate dispensing equipment and procedure as recommended by the manufacturer.

3.6.3 Transporting

Transport concrete from the mixer to the forms as rapidly as practicable. Prevent segregation or loss of ingredients. Clean transporting equipment thoroughly before each batch. Do not use aluminum pipe or chutes. Remove concrete which has segregated in transporting and dispose of as directed.

3.7 PLACING CONCRETE

Place concrete in accordance with ACI 301 Section 5.

3.7.1 Footing Placement

Concrete for footings may be placed in excavations without forms upon inspection and approval by the Contracting Officer. Excavation width must

be a minimum of 4 inches greater than indicated.

3.7.2 Pumping

ACI 304R and ACI 304.2R. Pumping must not result in separation or loss of materials nor cause interruptions sufficient to permit loss of plasticity between successive increments. Loss of slump in pumping equipment must not exceed 2 inches at discharge/placement. Do not convey concrete through pipe made of aluminum or aluminum alloy. Avoid rapid changes in pipe sizes. Limit maximum size of course aggregate to 33 percent of the diameter of the pipe. Limit maximum size of well-rounded aggregate to 40 percent of the pipe diameter. Take samples for testing at both the point of delivery to the pump and at the discharge end.

3.7.2.1 Pumping Lightweight Concrete

In accordance with ACI 213R unless otherwise specified. Presoak or presaturate aggregates. Cement content must be minimum of 564 pounds per cubic yard and be sufficient to accommodate a 4 to 6 inch slump. Make field trial run in accordance with ACI 213R.

3.7.3 Cold Weather

Cold weather concrete must meet the requirements of ACI 301 unless otherwise specified. Do not allow concrete temperature to decrease below 50 degrees F. Obtain approval prior to placing concrete when the ambient temperature is below 40 degrees F or when concrete is likely to be subjected to freezing temperatures within 24 hours. Cover concrete and provide sufficient heat to maintain 50 degrees F minimum adjacent to both the formwork and the structure while curing. Limit the rate of cooling to 37 degrees F in any 1 hour and 50 degrees F per 24 hours after heat application.

3.7.4 Hot Weather

Hot weather concrete must meet the requirements of ACI 301 unless otherwise specified. Maintain required concrete temperature using Figure 4.2 in ACI 305R to prevent the evaporation rate from exceeding 0.2 pound of water per square foot of exposed concrete per hour. Cool ingredients before mixing or use other suitable means to control concrete temperature and prevent rapid drying of newly placed concrete. Shade the fresh concrete as soon as possible after placing. Start curing when the surface of the fresh concrete is sufficiently hard to permit curing without damage. Provide water hoses, pipes, spraying equipment, and water hauling equipment, where job site is remote to water source, to maintain a moist concrete surface throughout the curing period. Provide burlap cover or other suitable, permeable material with fog spray or continuous wetting of the concrete when weather conditions prevent the use of either liquid membrane curing compound or impervious sheets. For vertical surfaces, protect forms from direct sunlight and add water to top of structure once concrete is set.

3.7.5 Bonding

Surfaces of set concrete at joints, must be roughened and cleaned of laitance, coatings, loose particles, and foreign matter. Roughen surfaces in a manner that exposes the aggregate uniformly and does not leave laitance, loosened particles of aggregate, nor damaged concrete at the surface.

Obtain bonding of fresh concrete that has set as follows:

a. At joints between footings and walls or columns, between walls or columns and the beams or slabs they support, and elsewhere unless otherwise specified; roughened and cleaned surface of set concrete must be dampened, but not saturated, immediately prior to placing of fresh concrete.

b. At joints in exposed-to-view work; at vertical joints in walls; at joints near midpoint of span in girders, beams, supported slabs, other structural members; in work designed to contain liquids; the roughened and cleaned surface of set concrete must be dampened but not saturated and covered with a cement grout coating.

c. Provide cement grout that consists of equal parts of portland cement and fine aggregate by weight with not more than 6 gallons of water per sack of cement. Apply cement grout with a stiff broom or brush to a minimum thickness of 1/16 inch. Deposit fresh concrete before cement grout has attained its initial set.

3.8 WASTE MANAGEMENT

Provide as specified in the Waste Management Plan and as follows.

3.8.1 Mixing Equipment

Before concrete pours, designate Contractor-owned site meeting environmental standards for cleaning out concrete mixing trucks. Minimize water used to wash equipment.

3.8.2 Hardened, Cured Waste Concrete

Crush and reuse hardened, cured waste concrete as fill or as a base course for pavement. Use hardened, cured waste concrete as aggregate in concrete mix if approved by Contracting Officer.

3.8.3 Reinforcing Steel

Collect reinforcing steel and place in designated area for recycling.

3.8.4 Other Waste

Identify concrete manufacturer's or supplier's policy for collection or return of construction waste, unused material, deconstruction waste, and/or packaging material. Return excess cement to supplier. Institute deconstruction and construction waste separation and recycling for use in manufacturer's programs. When such a program is not available, seek local recyclers to reclaim the materials.

3.9 SURFACE FINISHES EXCEPT FLOOR, SLAB, AND PAVEMENT FINISHES

3.9.1 Defects

Repair surface defects in accordance with ACI 301 Section 5.

3.9.2 Not Against Forms (Top of Walls)

Surfaces not otherwise specified must be finished with wood floats to even

surfaces. Finish must match adjacent finishes.

3.9.3 Formed Surfaces

3.9.3.1 Tolerances

Tolerances in accordance with ACI 117 and as indicated.

3.9.3.2 As-Cast Rough Form

Provide for surfaces not exposed to public view a surface finish SF-1.0. Patch holes and defects in accordance with ACI 301.

3.9.3.3 Standard Smooth Finish

Provide for surfaces exposed to public view a surface finish SF-3.0. Patch holes and defects in accordance with ACI 301.

3.9.4 Smooth-RubbedGrout-Cleaned RubbedCork-FloatedExposed Aggregate Finish

Provide a smooth-rubbed finish per ACI 301 Section 5 in the locations indicated.Provide a grout-cleaned rubbed finish per ACI 301 Section 5 in the locations indicated.Provide a cork-floated finish per ACI 301 Section 5 in the locations indicated.Provide an exposed aggregate finish per ACI 301 Section 5 in the locations indicated.

3.10 FLOOR, SLAB, AND PAVEMENT FINISHES AND MISCELLANEOUS CONSTRUCTION

In accordance with ACI 301 and ACI 302.1R, unless otherwise specified. Slope floors uniformly to drains where drains are provided. Depress the concrete base slab where quarry tile, ceramic tile, or are indicated. Steel trowel and fine-broom finish concrete slabs that are to receive quarry tile, ceramic tile, or paver tile . Where straightedge measurements are specified, Contractor must provide straightedge.

3.10.1 Finish

Place, consolidate, and immediately strike off concrete to obtain proper contour, grade, and elevation before bleedwater appears. Permit concrete to attain a set sufficient for floating and supporting the weight of the finisher and equipment. If bleedwater is present prior to floating the surface, drag the excess water off or remove by absorption with porous materials. Do not use dry cement to absorb bleedwater.

3.10.1.1 Scratched

Use for surfaces intended to receive bonded applied cementitious applications. Finish concrete in accordance with ACI 301 Section 5 for a scratched finish.

3.10.1.2 Floated

Use for surfaces to receive waterproofing membranes, and exterior slabs where not otherwise specified. Finish concrete in accordance with ACI 301 Section 5 for a floated finish.

3.10.1.3 Concrete Containing Silica Fume

Finish using magnesium floats or darbies.

3.10.1.4 Steel Troweled

Use for floors intended as walking surfaces for reception of floor coverings . Finish concrete in accordance with ACI 301 Section 5 for a steel troweled finish.

3.10.1.5 Nonslip Finish

Use on surfaces of exterior platforms, steps, and landings; and on exterior and interior pedestrian ramps. Finish concrete in accordance with ACI 301 Section 5 for a dry-shake finish. After the selected material has been embedded by the two floatings, complete the operation with a broomed floated troweled finish.

3.10.1.6 Broomed

Use on surfaces of exterior walks, platforms, patios, and ramps, unless otherwise indicated. Finish concrete in accordance with ACI 301 Section 5 for a broomed finish.

3.10.1.7 Pavement

Screed the concrete with a template advanced with a combined longitudinal and crosswise motion. Maintain a slight surplus of concrete ahead of the template. After screeding, float the concrete longitudinally. Use a straightedge to check slope and flatness; correct and refloat as necessary. Obtain final finish by belting. Lay belt flat on the concrete surface and advance with a sawing motion; continue until a uniform but gritty nonslip surface is obtained. a burlap drag. Drag a strip of clean, wet burlap from 3 to 10 feet wide and 2 feet longer than the pavement width across the slab. Produce a fine, granular, sandy textured surface without disfiguring marks. Round edges and joints with an edger having a radius of 1/8 inch.

3.10.1.8 Concrete Toppings Placement

The following requirements apply to the placement of toppings of concrete on base slabs that are either freshly placed and still plastic, or on hardened base slabs.

a. Placing on a Fresh Base: Screed and bull float the base slab. As soon as the water sheen has disappeared, lightly rake the surface of the base slab with a stiff bristle broom to produce a bonding surface for the topping. Immediately spread the topping mixture evenly over the roughened base before final set takes place. Give the topping the finish .

b. Bonding to a Hardened Base: When the topping is to be bonded to a floated or troweled hardened base, roughen the base by scarifying, grit-blasting, scabbling, planing, flame cleaning, or acid-etching to lightly expose aggregate and provide a bonding surface. Remove dirt, laitance, and loose aggregate by means of a stiff wire broom. Keep the clean base wet for a period of 12 hours preceding the application of the topping. Remove excess water and apply a 1:1:1/2 cement-sand-water grout, and brush into the surface of the base slab. Do not allow the cement grout to dry, and spread it only short distances ahead of the topping placement. Do not allow the temperature differential between the completed base and the topping

mixture to exceed 41 degrees F at the time of placing. Place the topping and finish as specified herein.

3.10.1.9 Chemical-Hardener Treatment

[Apply liquid-chemical floor hardener where indicated after curing and drying concrete surface. Dilute liquid hardener with water and apply in three coats. First coat must be one-third strength, second coat one-half strength, and third coat two-thirds strength. Apply each coat evenly and allow to dry 24 hours between coats.

Approved proprietary chemical hardeners must be applied in accordance with manufacturer's printed directions.

]3.10.1.10 Colored Wear-Resistant Finish

[a. Give finish to monolithic slab surfaces where indicated.

b. Apply dry shake materials for colored wear-resistant finish at the rate of 60 pounds per 100 square feet of surface.

c. Immediately following first floating operation, approximately two-thirds of specified weight of dry shake material must be uniformly distributed over surface and embedded by means of power floating. After first dry-shake application has been embedded, uniformly distribute remainder of dry-shake material over surface at right angles to first dry-shake application and embed by means of power floating. Trueness of surface and other requirements for floating operations not specified in this paragraph must be as specified for float finish.

d. After completion of float finish, apply a trowel finish as specified.

]3.10.1.11 Heavy-Duty Wear-Resistant Finish

a. Give finish to slab surfaces where indicated.

b. Dry-shake material for heavy-duty, wear-resistant finish must consist of a mixture of standard portland cement and aggregate for heavy-duty, wear-resistant finish proportioned by weight as follows:

One part standard portland cement and [two parts traprock aggregate for heavy-duty wear-resistant finish] [four parts emery aggregate for heavy-duty wear-resistant finish] [two parts by weight iron aggregate for heavy-duty, wear-resistant finish].

c. Apply blended dry-shake material as follows:

Maximum type of aggregate in dry shake	**Amount per 100 square feet of Surface**
Traprock	160 pounds
Emery	130 pounds

Maximum type of aggregate in dry shake	Amount per 100 square feet of Surface
Iron	130 pounds

d. Immediately following the first floating operation, approximately one-half the specified weight of blended, uniformly distribute dry-shake materials over the surface and embedded by means of power floating. After the first dry-shake application has been embedded, uniformly distribute the remaining one-half of the blended dry-shake material over the surface at right angles to the first dry-shake application and embedded by means of power floating. Trueness of surface and other requirements for floating operations not specified in this paragraph must be as specified for float finish.

e. After completion of the float finish, trowel finish the surface as specified.

[3.10.2 Flat Floor Finishes

ACI 302.1R. Construct in accordance with one of the methods recommended in Table 7.15.3, "Typical Composite Ff/FL Values for Various Construction Methods." ACI 117 for tolerance tested by ASTM E1155.

a. Specified Conventional Value:

Floor Flatness (Ff) [20] [_____] [13] [_____] minimum
Floor Levelness (FL) [15] [_____] [10] [_____] minimum

b. Specified Industrial:

Floor Flatness (Ff) [30] [_____] [15] [_____] minimum
Floor Levelness (FL) [20] [_____] [10] [_____] minimum

3.10.2.1 Measurement of Floor Tolerances

Test slab within 24 hours of the final troweling. Provide tests to Contracting Officer within 12 hours after collecting the data. Floor flatness inspector is required to provide a tolerance report which must include:

a. Key plan showing location of data collected.

b. Results required by ASTM E1155.

3.10.2.2 Remedies for Out of Tolerance Work

Contractor is required to repair and retest any floors not meeting specified tolerances. Prior to repair, Contractor must submit and receive approval for the proposed repair, including product data from any materials proposed. Repairs must not result in damage to structural integrity of the floor. For floors exposed to public view, repairs must prevent any uneven or unusual coloring of the surface.

]3.10.3 Concrete Walks

Provide 4 inches thick minimum. Provide contraction joints spaced every 5 linear feet unless otherwise indicated. Cut contraction joints 1 inch

deep, or one fourth the slab thickness whichever is deeper, with a jointing tool after the surface has been finished. Provide 0.5 inch thick transverse expansion joints at changes in direction where sidewalk abuts curb, steps, rigid pavement, or other similar structures; space expansion joints every 50 feet maximum. Give walks a broomed finish. Unless indicated otherwise, provide a transverse slope of 1/48. Limit variation in cross section to 1/4 inch in 5 feet.

3.10.4 Pits and Trenches

Place bottoms and walls monolithically or provide waterstops and keys.

3.10.5 Curbs[and Gutters]

Provide contraction joints spaced every 10 feet maximum unless otherwise indicated. Cut contraction joints 3/4 inch deep with a jointing tool after the surface has been finished. Provide expansion joints 1/2 inch thick and spaced every 100 feet maximum unless otherwise indicated. Perform pavement finish.

[3.10.6 Splash Blocks

Provide at outlets of downspouts emptying at grade. Splash blocks may be precast concrete, and must be 24 inches long, 12 inches wide and 4 inches thick, unless otherwise indicated, with smooth-finished countersunk dishes sloped to drain away from the building.

]3.11 JOINTS

3.11.1 Construction Joints

Make and locate joints not indicated so as not to impair strength and appearance of the structure, as approved. Joints must be perpendicular to main reinforcement. Reinforcement must be continued and developed across construction joints. Locate construction joints as follows:

3.11.1.1 Maximum Allowable Construction Joint Spacing

a. In walls at not more than 60 feet in any horizontal direction.

b. In slabs on ground, so as to divide slab into areas not in excess of 1,200 square feet.

3.11.1.2 Construction Joints for Constructability Purposes

a. In walls, at top of footing; at top of slabs on ground; at top and bottom of door and window openings or where required to conform to architectural details; and at underside of deepest beam or girder framing into wall.

b. In columns or piers, at top of footing; at top of slabs on ground; and at underside of deepest beam or girder framing into column or pier.

c. Near midpoint of spans for supported slabs, beams, and girders unless a beam intersects a girder at the center, in which case construction joints in girder must offset a distance equal to twice the width of the beam. Make transfer of shear through construction joint by use of inclined reinforcement.

Provide keyways at least 1-1/2-inches deep in construction joints in walls and slabs and between walls and footings; approved bulkheads may be used for slabs.

3.11.2 Isolation Joints in Slabs on Ground

a. Provide joints at points of contact between slabs on ground and vertical surfaces, such as column pedestals, foundation walls, grade beams, and elsewhere as indicated.

b. Fill joints with premolded joint filler strips 1/2 inch thick, extending full slab depth. Install filler strips at proper level below finish floor elevation with a slightly tapered, dress-and-oiled wood strip temporarily secured to top of filler strip to form a groove not less than 3/4 inch in depth where joint is sealed with sealing compound and not less than 1/4 inch in depth where joint sealing is not required. Remove wood strip after concrete has set. Contractor must clean groove of foreign matter and loose particles after surface has dried.

3.11.3 Contraction Joints in Slabs on Ground

a. Provide joints to form panels as indicated.

b. Under and on exact line of each control joint, cut 50 percent of welded wire reinforcement before placing concrete.

c. Sawcut contraction joints into slab on ground in accordance with ACI 301 Section 5.

3.11.4 Sealing Joints in Slabs on Ground

a. Contraction and control joints which are to receive finish flooring material must be sealed with joint sealing compound after concrete curing period. Slightly underfill groove with joint sealing compound to prevent extrusion of compound. Remove excess material as soon after sealing as possible.

b. Sealed groove must be left ready to receive filling material that is provided as part of finish floor covering work.

3.12 CONCRETE FLOOR TOPPING

3.12.1 Standard Floor Topping

Provide topping for treads and platforms of metal steel stairs and elsewhere as indicated.

3.12.1.1 Preparations Prior to Placing

a. When topping is placed on a green concrete base slab, screed surface of base slab to a level not more than 1-1/2 inches nor less than 1 inch below required finish surface. Remove water and laitance from surface of base slab before placing topping mixture. As soon as water ceases to rise to surface of base slab, place topping.

b. When topping is placed on a hardened concrete base slab, remove dirt,

loose material, oil, grease, asphalt, paint, and other contaminants from base slab surface, leaving a clean surface. Prior to placing topping mixture, 2-1/2-inches minimum, slab surface must be dampened and left free of standing water. Immediately before topping mixture is placed, broom a coat of neat cement grout onto surface of slab. Do not allow cement grout to set or dry before topping is placed.

c. When topping is placed on a metal surface, such as metal pans for steel stairs, remove dirt, loose material, oil, grease, asphalt, paint, and other contaminants from metal surface.

3.12.1.2 Placing

Spread standard topping mixture evenly on previously prepared base slab or metal surface, brought to correct level with a straightedge, and struck off. Topping must be consolidated, floated, checked for trueness of surface, and refloated as specified for float finish.

3.12.1.3 Finishing

Give trowel finish standard floor topping surfaces.

Give other finishes standard floor topping surfaces as indicated.

3.12.2 Heavy-Duty Floor Topping

Provide topping where indicated.

3.12.2.1 Heavy-duty Topping Mixture

Provide mixture that consists of 1 part portland cement and 2-1/2 parts emery aggregate or 1 part fine aggregate and 1-1/2 parts traprock coarse aggregate, by volume. Exact proportions of mixture must conform to recommendations of aggregate manufacturer. Mixing water must not exceed 3-1/4 gallons per 94-pound sack of cement including unabsorbed moisture in aggregate. Maximum slump must be 1 inch.

3.12.2.2 Base Slab

a. Screed surface of slab to a level no more than 1-1/2 inches nor less than 1 inch below grade of finished floor.

b. Give slab a scratch finish as specified.

c. Preparations prior to placing.

Remove dirt, loose material, oil, grease, asphalt, paint and other contaminants from base slab surface. Prior to placing topping mixture, dampen slab surface and leave free of standing water. Immediately before topping mixture is placed, broom a coat of neat cement grout onto surface of slab. Allow cement grout to set or dry before topping mixture is placed.

3.12.2.3 Placing

Spread heavy-duty topping mixture evenly on previously prepared base slab, and bring to correct level with a straightedge, and strike off. Provide topping that is consolidated, floated, and checked for trueness of surface as specified for float finish, except that power-driven floats is the

impact type.

3.12.2.4 Finishing

Give trowel finish heavy-duty floor topping surfaces. Provide trowel finish as specified, except that additional troweling after first power troweling must be not less than three hand-troweling operations.

3.13 CURING AND PROTECTION

Curing and protection in accordance with ACI 301 Section 5, unless otherwise specified. Begin curing immediately following form removal. Avoid damage to concrete from vibration created by blasting, pile driving, movement of equipment in the vicinity, disturbance of formwork or protruding reinforcement, and any other activity resulting in ground vibrations. Protect concrete from injurious action by sun, rain, flowing water, frost, mechanical injury, tire marks, and oil stains. Do not allow concrete to dry out from time of placement until the expiration of the specified curing period. Do not use membrane-forming compound on surfaces where appearance would be objectionable, on any surface to be painted, where coverings are to be bonded to the concrete, or on concrete to which other concrete is to be bonded. If forms are removed prior to the expiration of the curing period, provide another curing procedure specified herein for the remaining portion of the curing period. Provide moist curing for those areas receiving liquid chemical sealer, hardener, or epoxy coating. Allow curing compound/sealer installations to cure prior to the installation of materials that adsorb VOCs, including .

3.13.1 Requirements for Type III, High-Early-Strength Portland Cement

The curing periods are required to be not less than one-fourth of those specified for portland cement, but in no case less than 72 hours.

3.13.2 Curing Periods

ACI 301 Section 5, except 10 days for retaining walls, pavement or chimneys. Begin curing immediately after placement. Protect concrete from premature drying, excessively hot temperatures, and mechanical injury; and maintain minimal moisture loss at a relatively constant temperature for the period necessary for hydration of the cement and hardening of the concrete. The materials and methods of curing are subject to approval by the Contracting Officer.

3.13.3 Curing Formed Surfaces

Accomplish curing of formed surfaces, including undersurfaces of girders, beams, supported slabs, and other similar surfaces by moist curing with forms in place for full curing period or until forms are removed. If forms are removed before end of curing period, accomplish final curing of formed surfaces by any of the curing methods specified above, as applicable.

3.13.4 Curing Unformed Surfaces

a. Accomplish initial curing of unformed surfaces, such as monolithic slabs, floor topping, and other flat surfaces, by membrane curing.

b. Accomplish final curing of unformed surfaces by any of curing methods specified, as applicable.

c. Accomplish final curing of concrete surfaces to receive liquid floor hardener of finish flooring by moisture-retaining cover curing.

3.13.5 Temperature of Concrete During Curing

When temperature of atmosphere is 41 degrees F and below, maintain temperature of concrete at not less than 55 degrees F throughout concrete curing period or 45 degrees F when the curing period is measured by maturity. When necessary, make arrangements before start of concrete placing for heating, covering, insulation, or housing as required to maintain specified temperature and moisture conditions for concrete during curing period.

When the temperature of atmosphere is 80 degrees F and above or during other climatic conditions which cause too rapid drying of concrete, make arrangements before start of concrete placing for installation of wind breaks, of shading, and for fog spraying, wet sprinkling, or moisture-retaining covering of light color as required to protect concrete during curing period.

Changes in temperature of concrete must be uniform and not exceed 37 degrees F in any 1 hour nor 80 degrees F in any 24-hour period.

3.13.6 Protection from Mechanical Injury

During curing period, protect concrete from damaging mechanical disturbances, particularly load stresses, heavy shock, and excessive vibration and from damage caused by rain or running water.

3.13.7 Protection After Curing

Protect finished concrete surfaces from damage by construction operations.

3.14 FIELD QUALITY CONTROL

3.14.1 Sampling

ASTM C172/C172M. Collect samples of fresh concrete to perform tests specified. ASTM C31/C31M for making test specimens.

3.14.2 Testing

3.14.2.1 Slump Tests

ASTM C143/C143M. Take concrete samples during concrete placement/discharge. The maximum slump may be increased as specified with the addition of an approved admixture provided that the water-cementitious material ratio is not exceeded. Perform tests at commencement of concrete placement, when test cylinders are made, and for each batch (minimum) or every 20 cubic yards (maximum) of concrete.

3.14.2.2 Temperature Tests

Test the concrete delivered and the concrete in the forms. Perform tests in hot or cold weather conditions (below 50 degrees F and above 80 degrees F) for each batch (minimum) or every 20 cubic yards (maximum) of concrete, until the specified temperature is obtained, and whenever test cylinders and slump tests are made.

3.14.2.3 Compressive Strength Tests

ASTM C39/C39M. Make six 6 inch by 12 inch test cylinders for each set of tests in accordance with ASTM C31/C31M, ASTM C172/C172M and applicable requirements of ACI 305R and ACI 306R. Take precautions to prevent evaporation and loss of water from the specimen. Test two cylinders at 7 days, two cylinders at 28 days, and hold two cylinder in reserve. Take samples for strength tests of each mix design of concrete placed each day not less than once a day, nor less than once for each 100 cubic yards of concrete for the first 500 cubic yards, then every 500 cubic yards thereafter, nor less than once for each 5400 square feet of surface area for slabs or walls. For the entire project, take no less than five sets of samples and perform strength tests for each mix design of concrete placed. Each strength test result must be the average of two cylinders from the same concrete sample tested at 28 days . Concrete compressive tests must meet the requirements of this section, the Contract Document, and ACI 301. Retest locations represented by erratic core strengths. Where retest does not meet concrete compressive strength requirements submit a mitigation or remediation plan for review and approval by the contracting officer. Repair core holes with nonshrink grout. Match color and finish of adjacent concrete.

3.14.2.4 Air Content

ASTM C173/C173M or ASTM C231/C231M for normal weight concrete and ASTM C173/C173M for lightweight concrete. Test air-entrained concrete for air content at the same frequency as specified for slump tests.

3.14.2.5 Strength of Concrete Structure

The strength of the concrete structure will be considered to be deficient if any of the following conditions are identified:

a. Failure to meet compressive strength tests as evaluated.

b. Reinforcement not conforming to requirements specified.

c. Concrete which differs from required dimensions or location in such a manner as to reduce strength.

d. Concrete curing and protection of concrete against extremes of temperature during curing, not conforming to requirements specified.

e. Concrete subjected to damaging mechanical disturbances, particularly load stresses, heavy shock, and excessive vibration.

f. Poor workmanship likely to result in deficient strength.

Where the strength of the concrete structure is considered deficient submit a mitigation or remediation plan for review and approval by the contracting officer.

3.14.2.6 Non-Conforming Materials

Factors that indicate that there are non-conforming materials include (but not limited to) excessive compressive strength, inadequate compressive strength, excessive slump, excessive voids and honeycombing, concrete delivery records that indicate excessive time between mixing and

placement, or excessive water was added to the mixture during delivery and placement. Any of these indicators alone are sufficient reason for the Contracting Officer to request additional sampling and testing.

Investigations into non-conforming materials must be conducted at the Contractor's expense. The Contractor must be responsible for the investigation and must make written recommendations to adequately mitigate or remediate the non-conforming material. The Contracting Officer may accept, accept with reduced payment, require mitigation, or require removal and replacement of non-conforming material at no additional cost to the Government.

3.14.2.7 Testing Concrete Structure for Strength

When there is evidence that strength of concrete structure in place does not meet specification requirements or there are non-conforming materials, make cores drilled from hardened concrete for compressive strength determination in accordance with ASTM C42/C42M, and as follows:

a. Take at least three representative cores from each member or area of concrete-in-place that is considered potentially deficient. Location of cores will be determined by the Contracting Officer.

b. Test cores after moisture conditioning in accordance with ASTM C42/C42M if concrete they represent is more than superficially wet under service.

c. Air dry cores, (60 to 80 degrees F with relative humidity less than 60 percent) for 7 days before test and test dry if concrete they represent is dry under service conditions.

d. Strength of cores from each member or area are considered satisfactory if their average is equal to or greater than 85 percent of the 28-day design compressive strength of the class of concrete.

Fill core holes solid with patching mortar and finished to match adjacent concrete surfaces.

Correct concrete work that is found inadequate by core tests in a manner approved by the Contracting Officer.

3.15 REPAIR, REHABILITATION AND REMOVAL

Before the Contracting Officer accepts the structure the Contractor must inspect the structure for cracks, damage and substandard concrete placements that may adversely affect the service life of the structure. A report documenting these defects must be prepared which includes recommendations for repair, removal or remediation must be submitted to the Contracting Officer for approval before any corrective work is accomplished.

3.15.1 Repair of Weak Surfaces

Weak surfaces are defined as mortar-rich, rain-damaged, uncured, or containing exposed voids or deleterious materials. Concrete surfaces with weak surfaces less than 1/4 inch thick must be diamond ground to remove the weak surface. Surfaces containing weak surfaces greater than 1/4 inch thick must be removed and replaced or mitigated in a manner acceptable to

the Contracting Officer.

3.15.2 Failure of Quality Assurance Test Results

Proposed mitigation efforts by the Contractor must be approved by the Contracting Officer prior to proceeding.

-- End of Section --

THIS PAGE HAS BEEN INTENTIONALLY LEFT BLANK

SECTION 03 42 13.00 10

PLANT-PRECAST CONCRETE PRODUCTS FOR BELOW GRADE CONSTRUCTION
05/16

PART 1 GENERAL

1.1 REFERENCES

The publications listed below form a part of this specification to the extent referenced. The publications are referred to within the text by the basic designation only.

AMERICAN CONCRETE INSTITUTE (ACI)

ACI 211.1	(1991; R 2009) Standard Practice for Selecting Proportions for Normal, Heavyweight and Mass Concrete
ACI 211.2	(1998; R 2004) Standard Practice for Selecting Proportions for Structural Lightweight Concrete
ACI 305R	(2010) Guide to Hot Weather Concreting
ACI 306.1	(1990; R 2002) Standard Specification for Cold Weather Concreting
ACI 318	(2014; Errata 1-2 2014; Errata 3-5 2015; Errata 6 2016; Errata 7-9 2017) Building Code Requirements for Structural Concrete (ACI 318-14) and Commentary (ACI 318R-14)

AMERICAN CONCRETE PIPE ASSOCIATION (ACPA)

ACPA 01-102	(2000) Concrete Pipe Handbook
ACPA 01-110	(1984) Design Manual for Sulfide and Corrosion Prediction and Control
ACPA QPC	(202016) QCast Plant Certification Manual

AMERICAN WELDING SOCIETY (AWS)

AWS D1.1/D1.1M	(2015; Errata 1 2015; Errata 2 2016) Structural Welding Code - Steel
AWS D1.4/D1.4M	(2011) Structural Welding Code - Reinforcing Steel

ASTM INTERNATIONAL (ASTM)

ASTM A36/A36M	(2014) Standard Specification for Carbon Structural Steel
ASTM A153/A153M	(2016) Standard Specification for Zinc Coating (Hot-Dip) on Iron and Steel

	Hardware
ASTM A615/A615M	(2016) Standard Specification for Deformed and Plain Carbon-Steel Bars for Concrete Reinforcement
ASTM A706/A706M	(2016) Standard Specification for Low-Alloy Steel Deformed and Plain Bars for Concrete Reinforcement
ASTM A767/A767M	(2016) Standard Specification for Zinc-Coated (Galvanized) Steel Bars for Concrete Reinforcement
ASTM A775/A775M	(2017) Standard Specification for Epoxy-Coated Steel Reinforcing Bars
ASTM A884/A884M	(2019) Standard Specification for Epoxy-Coated Steel Wire and Welded Wire Reinforcement
ASTM A1064/A1064M	(2017) Standard Specification for Carbon-Steel Wire and Welded Wire Reinforcement, Plain and Deformed, for Concrete
ASTM C31/C31M	(2019) Standard Practice for Making and Curing Concrete Test Specimens in the Field
ASTM C39/C39M	(2018) Standard Test Method for Compressive Strength of Cylindrical Concrete Specimens
ASTM C138/C138M	(2017a) Standard Test Method for Density (Unit Weight), Yield, and Air Content (Gravimetric) of Concrete
ASTM C143/C143M	(2015) Standard Test Method for Slump of Hydraulic-Cement Concrete
ASTM C171	(2016) Standard Specification for Sheet Materials for Curing Concrete
ASTM C173/C173M	(2016) Standard Test Method for Air Content of Freshly Mixed Concrete by the Volumetric Method
ASTM C192/C192M	(2018) Standard Practice for Making and Curing Concrete Test Specimens in the Laboratory
ASTM C231/C231M	(2017a) Standard Test Method for Air Content of Freshly Mixed Concrete by the Pressure Method
ASTM C309	(2011) Standard Specification for Liquid Membrane-Forming Compounds for Curing Concrete

ASTM C443	(2012; R 2017) Standard Specification for Joints for Concrete Pipe and Manholes, Using Rubber Gaskets
ASTM C857	(2016) Standard Practice for Minimum Structural Design Loading for Underground Precast Concrete Utility Structures
ASTM C858	(2010; E 2012) Standard Specification for Underground Precast Concrete Utility Structures
ASTM C877	(2008) External Sealing Bands for Concrete Pipe, Manholes, and Precast Box Sections
ASTM C891	(2011) Installation of Underground Precast Concrete Utility Structures
ASTM C920	(2018) Standard Specification for Elastomeric Joint Sealants
ASTM C923	(2008; R 2013; E 2016) Standard Specification for Resilient Connectors Between Reinforced Concrete Manhole Structures, Pipes and Laterals
ASTM C990	(2009; R 2014) Standard Specification for Joints for Concrete Pipe, Manholes and Precast Box Sections Using Preformed Flexible Joint Sealants
ASTM C1064/C1064M	(2017) Standard Test Method for Temperature of Freshly Mixed Hydraulic-Cement Concrete
ASTM C1107/C1107M	(2017) Standard Specification for Packaged Dry, Hydraulic-Cement Grout (Nonshrink)
ASTM C1116/C1116M	(2010a; R 2015) Standard Specification for Fiber-Reinforced Concrete
ASTM C1244	(2011; R 2017) Standard Test Method for Concrete Sewer Manholes by the Negative Air Pressure (Vacuum) Test Prior to Backfill
ASTM C1478	(2019) Standard Specification for Storm Drain Resilient Connectors Between Reinforced Concrete Storm Sewer Structures, Pipes and Laterals

CSA GROUP (CSA)

CSA A23.4	(2016; Errata 2016) Precast Concrete - Materials and Construction

NATIONAL PRECAST CONCRETE ASSOCIATION (NPCA)

NPCA QC Manual	(2017) Quality Control Manual for Precast

and Prestressed Concrete Plants

1.2 SUBMITTALS

All submittals are the responsibility of the precast concrete producer. Government approval is required for submittals with a "G" designation; submittals not having a "G" designation are for Contractor Quality Control approval. Submittals with an "S" are for inclusion in the Sustainability eNotebook, in conformance to Section 01 33 29 SUSTAINABILITY REPORTING. Submit the following in accordance with Section 01 33 00 SUBMITTAL PROCEDURES:

SD-01 Preconstruction Submittals

Quality Control Procedures

SD-02 Shop Drawings

Standard Precast Units; G
Custom-Made Precast Units; G
Special Finishes

SD-03 Product Data

Standard Precast Units
Proprietary Precast Units
Embedded Items
Accessories

SD-05 Design Data

Design Calculations; G
Concrete Mix Proportions

SD-06 Test Reports

Test Reports

SD-07 Certificates

Quality Control Procedures

SD-11 Closeout Submittals

Recycled content for fly ash and pozzolan; S
Recycled content for Ground Iron Blast-Furnace Slag; S
Recycled content for Silica Fume; S
Recycled content for Synthetic Fiber Reinforcement; S
Recycled content for steel; S

1.3 QUALITY ASSURANCE

Demonstrate adherence to the standards set forth in NPCA QC Manual or ACPA QPC. Meet requirements written in the subparagraphs below.

1.3.1 NPCA and ACPA Plant Certification

The precast concrete producer must be certified by the National Precast Concrete Association's or the American Concrete Pipe Association's Plant

Certification Program prior to and during production of the products for this project.

1.3.2 Qualifications, Quality Control and Inspection

1.3.2.1 Qualifications

Select a precast concrete producer that has been in the business of producing precast concrete units similar to those specified for a minimum of 3 years. The precast concrete producer must maintain a permanent quality control department or retain an independent testing agency on a continuing basis.

1.3.2.2 Quality Control Procedures

Submit quality control procedures established by the precast manufacturer in accordance with NPCA QC Manual and ACPA QPC. Show that the following QC tests are performed as required and in accordance with the ASTM standards indicated.

1.3.2.2.1 Slump

Perform a slump test for each 150 cu yd of concrete produced, or once a day, whichever comes first. Perform slump tests in accordance with ASTM C143/C143M.

1.3.2.2.2 Temperature

Measure the temperature of fresh concrete when slump or air content tests are made and when compressive test specimens are made in accordance with ASTM C1064/C1064M.

1.3.2.2.3 Compressive Strength

Make at least four compressive strength specimens for each 150 cubic yards of concrete of each mix in accordance with the following Standards: ASTM C31/C31M, ASTM C192/C192M, ASTM C39/C39M.

1.3.2.2.4 Air Content

Perform tests for air content on air-entrained, wet-cast concrete for each 150 cu yd of concrete, but not less often than once each day when air-entrained concrete is used. Determine the air content in accordance with either ASTM C231/C231M or ASTM C173/C173M for normal weight aggregates and ASTM C173/C173M for lightweight aggregates.

1.3.2.2.5 Unit Weight

Perform tests for unit weight a minimum of once per week to verify the yield of batch mixes. Perform unit weight tests for each 100 cu yd of lightweight concrete in accordance with ASTM C138/C138M.

1.3.2.3 Inspection

The Contracting Officer may place an inspector in the plant when the units covered by this specification are being manufactured. The burden of payment for plant inspection will be clearly detailed in the specification. The precast concrete producer must give notice 14 days prior to the time the units will be available for plant inspection.

Neither the exercise nor waiver of inspection at the plant will affect the Government's right to enforce contractual provisions after units are transported or erected.

1.3.2.4 Test Reports

Submit the following:

1.3.2.4.1 Material Certifications or Laboratory Test Reports

Include mill tests and all other test data, for portland cement, blended cement, pozzolans, ground granulated blast furnace slag, silica fume, aggregate, admixtures, and curing compound proposed for use on this project.

1.3.2.4.2 Mix Test

Submit reports showing that the mix has been successfully tested to produce concrete with the properties specified and will be suitable for the job conditions. Such tests may include compressive strength, flexural strength, plastic or hardened air content, freeze thaw durability, abrasion and absorption. Clearly detail in the specifications special tests for precast concrete or cast-in items.

1.3.2.4.3 Self-Consolidating Concrete

Submit sufficient documentation, when the use of self-consolidating concrete (SCC) is proposed, showing a minimum of 30-days production track records demonstrating that SCC is appropriate for casting of the product.

1.3.2.4.4 In-Plant QA/QC Inspection Reports

Submit inspection reports upon the request of the Contracting Officer.

1.4 DELIVERY, STORAGE, AND HANDLING

1.4.1 Delivery

Deliver precast units to the site in accordance with the delivery schedule to avoid excessive build-up of units in storage at the site. Upon delivery to the jobsite, all precast concrete units will be inspected by the Contracting Officer for quality and final acceptance.

1.4.2 Storage

Store units off the ground or in a manner that minimizes potential damage.

1.4.3 Handling

Handle, transport, and store products in a manner to minimize damage. Lifting devices or holes must be consistent with industry standards. Perform lifting with methods or devices intended for this purpose as indicated on shop drawings.

PART 2 PRODUCTS

2.1 SYSTEM DESCRIPTION

Furnish precast concrete units designed and fabricated by an experienced

and acceptable precast concrete manufacturer who has been, for at least three years, regularly and continuously engaged in the manufacture of precast concrete work similar to that indicated on the drawings. Coordinate precast work with the work of other trades. Below grade structures must comply with ASTM C858.

2.1.1 Standard Precast Units

Design standard precast concrete units to withstand indicated design load conditions in accordance with applicable industry design standards ACI 318, ASTM C857. Design must also consider stresses induced during handling, shipping and installation as to avoid product cracking or other handling damage. Indicate design loads for precast concrete units on the shop drawings. Submit drawings for standard precast concrete units furnished by the precast concrete producer for approval by the Contracting Officer. These drawings must demonstrate that the applicable industry design standards have been met. Include installation and construction information on shop drawings. Include details of steel reinforcement size and placement as well as supporting design calculations, if appropriate. Produce precast concrete units in accordance with the approved drawings. Submit cut sheets, for standard precast concrete units, showing conformance to project drawings and requirements, and to applicable industry design standards listed in this specification.

2.1.2 Custom-Made Precast Units

Submit design calculations for custom-made precast units, prepared and sealed by a registered professional engineer, for approval prior to fabrication. Include in the calculations the analysis of units for lifting stresses and the sizing of lifting devices. Submit drawings furnished by the precast concrete producer for approval by the Contracting Officer. Show on these drawings complete design, installation, and construction information in such detail as to enable the Contracting Officer to determine the adequacy of the proposed units for the intended purpose. Include details of steel reinforcement size and placement as well as supporting design calculations, if appropriate. Produce precast concrete units in accordance with the approved drawings.

2.1.3 Proprietary Precast Units

Products manufactured under franchise arrangements must conform to all the requirements specified by the franchiser. Items not included in the franchise specification, but included in this specification, must conform to the requirements in this specification. Submit standard plans or informative literature, for proprietary precast concrete units. Make available supporting calculations and design details upon request. Provide sufficient information as to demonstrate that such products will perform the intended task.

2.1.4 Joints and Sealants

Provide joints and sealants between adjacent units of the type and configuration indicated on shop drawings meeting specified design and performance requirements.

2.1.5 Concrete Mix Design

2.1.5.1 Concrete Mix Proportions

Base selection of proportions for concrete on the methodology presented in ACI 211.1 for normal weight concrete and ACI 211.2 for lightweight concrete. Develop the concrete proportions using the same type and brand of cement, the same type and brand of pozzolan, the same type and gradation of aggregates, and the same type and brand of admixture that will be used in the manufacture of precast concrete units for the project. Do not use calcium chloride in precast concrete containing reinforcing steel or other embedded metal items. At a minimum of thirty days prior to precast concrete unit manufacturing, the precast concrete producer will submit a mix design and proportions for each strength and type of concrete that will be used. Furnish a complete list of materials, including quantity, type, brand and applicable data sheets for all mix design constituents as well as applicable reference specifications. The use of self-consolidating concrete is permitted, provided that mix design proportions and constituents meet the requirements of this specification.

2.1.5.2 Concrete Strength

Provide precast concrete units with a 28-day compressive strength (f'c) of 4000 psi.

2.1.5.3 Water-to-Cement Ratio

Where exposed to freezing and thawing, furnish concrete containing entrained air and with a water-cementitious ratio of 0.45 or less. Where not exposed to freezing, but required to have a low permeability, furnish concrete with a water-cementitious ratio of 0.48 or less. Where exposed to deicer salts, brackish water, or seawater, furnish concrete with a water-cementitious ratio of 0.40 or less, for corrosion protection.

2.1.5.4 Air Content

The air content of concrete that will be exposed to freezing conditions must be within the limits given below.

	AIR CONTENT PERCENT	
NOMINAL MAXIMUM AGGREGATE SIZE	EXPOSURE CLASS F1	EXPOSURE CLASSES F2 and F3
3/8 inch	6.0	7.5
1/2 inch	5.5	7.0
3/4 inch	5.0	6.0
1.0 inch	4.5	6.0
1.5 inch	4.5	5.5
Note: For specified compressive strengths greater than 5000 psi, air content may be reduced 1 percent		

2.1.5.5 Corrosion Control for Sanitary Sewer Systems

Follow design recommendations outlined in Chapter 7 of ACPA 01-102 or the

ACPA 01-110 when hydrogen sulfide is indicated as a potential problem.

2.2 MATERIALS

Except as otherwise specified in the following paragraphs, conform material to Section 03 30 00 CAST-IN-PLACE CONCRETE.

2.2.1 Material Sustainability Criteria

For products in this section, where applicable and to extent allowed by performance criteria, provide and document the following in accordance with Section 01 33 29 SUSTAINABILITY REQUIREMENTS:

a. Recycled content for fly ash and pozzolan
b. Recycled content for Ground Iron Blast-Furnace Slag
c. Recycled content for Silica Fume
d. Recycled content for Synthetic Fiber Reinforcement
e. Recycled content for steel, 75 percent minimum

2.2.2 Pigments

Non-fading and lime-resistant

2.2.3 Reinforcement

2.2.3.1 Reinforcing Bars

a. Deformed Billet-steel: ASTM A615/A615M

b. Deformed Low-alloy steel: ASTM A706/A706M

2.2.3.2 Reinforcing Wire

a. Plain Wire: ASTM A1064/A1064M

b. Deformed Wire: ASTM A1064/A1064M

2.2.3.3 Welded Wire Reinforcement

a. Plain Wire: ASTM A1064/A1064M

b. Deformed Wire: ASTM A1064/A1064M

2.2.3.4 Epoxy Coated Reinforcement

a. Reinforcing Bars: ASTM A775/A775M

b. Wires and Welded Wire: ASTM A884/A884M

2.2.3.5 Galvanized Reinforcement

Provide galvanized reinforcement conforming to ASTM A767/A767M.

2.2.4 Synthetic Fiber Reinforcement

Provide fiber reinforced concrete in accordance with ASTM C1116/C1116M Type III, synthetic fiber reinforced concrete, and as follows. Synthetic reinforcing fibers must be monofilament polypropylene fibers. Provide fibers that have a specific gravity of 0.9, a minimum tensile strength of

70 ksi, graded per manufacturer, and specifically manufactured to an optimum gradation for use as concrete secondary reinforcement. Toughness indices must meet requirements for performance level I.

2.2.5 Inserts and Embedded Metal

All items embedded in concrete must be of the type required for the intended task, and meet the following standards.

a. Structural Steel Plates, Angles, etc.: ASTM A36/A36M

b. Hot-dipped Galvanized: ASTM A153/A153M

c. Proprietary Items: In accordance with manufacturers published literature

2.2.6 Accessories

Submit proper installation instructions and relevant product data for items including, but not limited to, sealants, gaskets, connectors, steps, cable racks and other items installed before or after delivery.

a. Rubber Gaskets for Circular Concrete Sewer Pipe and Culvert Pipe: ASTM C443.

b. External Sealing Bands for Noncircular Sewer, Storm Drain and Culvert Pipe: ASTM C877.

c. Preformed Flexible Joint Sealants for Concrete Pipe, Manholes, and Manufactured Box Sections: ASTM C990.

d. Elastomeric Joint Sealants: ASTM C920

2.2.7 Pipe Entry Connectors

Pipe entry connectors must conform to ASTM C923 or ASTM C1478.

2.2.8 Grout

Nonshrink Grout must conform to ASTM C1107/C1107M. Cementitious grout must be a mixture of portland cement, sand, and water. Proportion one part cement to approximately 2.5 parts sand, with the amount of water based on placement method.

PART 3 EXECUTION

3.1 FABRICATION AND PLACEMENT

Perform fabrication in accordance with NPCA QC Manual or ACPA QPC unless specified otherwise.

3.1.1 Forms

Use forms, for manufacturing precast concrete products, of the type and design consistent with industry standards and practices. They should be capable of consistently providing uniform products and dimensions. Construct forms so that the forces and vibrations to which the forms will be subjected can cause no product damage. Clean forms of concrete build-up after each use. Apply form release agents according to the

manufacturers recommendations and do not allow to build up on the form casting surfaces.

3.1.2 Reinforcement

Follow applicable ASTM Standard or ACI 318 for placement and splicing. Fabricate cages of reinforcement either by tying the bars, wires or welded wire reinforcement into rigid assemblies or by welding, where permissible, in accordance with AWS D1.4/D1.4M. Position reinforcing as specified by the design and so that the concrete cover conforms to requirements. The tolerance on concrete cover must be one-third of that specified but not more than 1/2 inch. Provide concrete cover not less than 1/2 inch. Take positive means to assure that the reinforcement does not move significantly during the casting operations.

3.1.3 Embedded Items

Position embedded items at locations specified in the design documents. Perform welding in accordance with AWS D1.1/D1.1M when necessary. Hold rigidly in place inserts, plates, weldments, lifting devices and other items to be imbedded in precast concrete products so that they do not move significantly during casting operations. Submit product data sheets and proper installation instruction for anchors, lifting inserts and other devices. Clearly indicate the products dimensions and safe working load.

3.1.4 Synthetic Fiber Reinforced Concrete

Add fiber reinforcement to the concrete mix at the batch plant in accordance with the applicable sections of ASTM C1116/C1116M and the recommendations of the manufacturer. Use a minimum of 1.5 pounds of fibers per cubic yard of concrete.

3.2 CONCRETE

3.2.1 Concrete Mixing

Mixing operations must produce batch-to-batch uniformity of strength, consistency, and appearance.

3.2.2 Concrete Placing

Deposit concrete into forms as near to its final location as practical. Keep the free fall of the concrete to a minimum. Consolidate concrete in such a manner that segregation of the concrete is minimized and honeycombed areas are kept to a minimum. Use vibrators to consolidate concrete with frequencies and amplitudes sufficient to produce well consolidated concrete.

3.2.2.1 Cold Weather Concreting

Perform cold weather concreting in accordance with ACI 306.1.

a. Provide adequate equipment for heating concrete materials and protecting concrete during freezing or near-freezing weather.

b. All concrete materials, reinforcement, forms, fillers, and ground with which concrete is to come in contact must be free from frost.

c. Do not use frozen materials or materials containing ice.

d. In cold weather the temperature of concrete at the time of placing must not be below 45 degrees F. Discard concrete that freezes before its compressive strength reaches 500 psi.

3.2.2.2 Hot Weather Concreting

Follow recommendations for hot weather concreting in ACI 305R. During hot weather, give proper attention to constituents, production methods, handling, placing, protection, and curing to prevent excessive concrete temperatures or water evaporation that could impair required strength or serviceability of the member or structure. The temperature of concrete at the time of placing must not exceed 90 degrees F.

3.2.3 Concrete Curing

Commence curing immediately following the initial set and completion of surface finishing.

3.2.3.1 Curing by Moisture Retention

Prevent moisture evaporation from exposed surfaces until adequate strength for stripping is reached by one of the following methods:

a. Cover with polyethylene sheets a minimum of 6 mils thick in accordance with ASTM C171.

b. Cover with burlap or other absorptive material and keep continually moist.

c. Use a membrane-curing compound, conforming to ASTM C309 and applied at a rate not less than 200 square ft/gallon, or in accordance with manufacturers' recommendations.

3.2.3.2 Curing with Heat and Moisture

Do not subject concrete to steam or hot air until after the concrete has attained its initial set. Apply steam, if used, within a suitable enclosure, which permits free circulation of the steam in accordance with CSA A23.4. If hot air is used for curing, take precautions to prevent moisture loss from the concrete. The temperature of the concrete must not be permitted to exceed 150 degrees F. These requirements do not apply to products cured with steam under pressure in an autoclave.

3.2.4 Surface Finish

Finish unformed surfaces of wet-cast precast concrete products as specified. If no finishing procedure is specified, finish such surfaces using a strike-off to level the concrete with the top of the form.

3.2.4.1 Formed Non-Architectural Surfaces

Cast surfaces against approved forms following industry practices in cleaning forms, designing concrete mixes, placing and curing concrete. Normal color variations, form joint marks, small surface holes caused by air bubbles, and minor chips and spalls will be accepted but no major imperfections, honeycombs or other major defects will be permitted.

3.2.4.2 Unformed Surfaces

Finish unformed surfaces with a vibrating screed, or by hand with a float. Normal color variations, minor indentations, minor chips and spalls will be accepted. Major imperfections, honeycombs, or other major defects are not permitted.

3.2.4.3 Special Finishes

Troweled, broom or other finishes must be according to the requirements of project documents and performed in accordance with industry standards or supplier specifications. Submit finishes for approval when required by the project documents. The sample finishes must be approved prior to the start of production.

3.2.5 Stripping Products from Forms

Do not remove products from the forms until the concrete reaches the compressive strength for stripping required by the design. If no such requirement exists, products may be removed from the forms after the final set of concrete provided that stripping damage is minimal.

3.2.6 Patching and Repair

No repair is required to formed surfaces that are relatively free of air voids and honeycombed areas, unless the surfaces are required by the design to be finished.

3.2.6.1 Repairing Minor Defects

Defects that will not impair the functional use or expected life of a precast concrete product may be repaired by any method that does not impair the product.

3.2.6.2 Repairing Honeycombed Areas

When honeycombed areas are to be repaired, remove all loose material and cut back the areas into essentially horizontal or vertical planes to a depth at which coarse aggregate particles break under chipping rather than being dislodged. Use proprietary repair materials in accordance with the manufacturer's instructions. If a proprietary repair material is not used, saturate the area with water. Immediately prior to repair, the area should be damp, but free of excess water. Apply a cement-sand grout or an approved bonding agent to the chipped surfaces, followed immediately by consolidating an appropriate repair material into the cavity.

3.2.6.3 Repairing Major Defects

Evaluate, by qualified personnel, defects in precast concrete products which impair the functional use or the expected life of products to determine if repairs are feasible and, if so, to establish the repair procedure.

3.2.7 Shipping Products

Do not ship products until they are at least five days old, unless it can be shown that the concrete strength has reached at least 75 percent of the specified 28-day strength, or that damage will not result, impairing the performance of the product.

3.3 INSTALLATION

3.3.1 Site Access

It is the Contractor's responsibility to provide adequate access to the site to facilitate hauling, storage and proper handling of the precast concrete products.

3.3.2 General Requirements

a. Install precast concrete products to the lines and grades shown in the contract documents or otherwise specified.

b. Lift products by suitable lifting devices at points provided by the precast concrete producer.

c. Install products in accordance with the precast concrete producer's instructions. In the absence of such instructions, install underground utility structures in accordance with ASTM C891. Install pipe and manhole sections in accordance with the procedures outlined by the American Concrete Pipe Association.

d. Field modifications to the product will relieve the precast producer of liability even if such modifications result in the failure of the product.

3.3.3 Water Tightness

Where water tightness is a necessary performance characteristic of the precast concrete product's end use, watertight joints, connectors and inserts should be used to ensure the integrity of the entire system.

3.4 FIELD QUALITY CONTROL

3.4.1 Site Tests

When water tightness testing is required for an underground product, use one of the following methods:

3.4.2 Vacuum Testing

Prior to backfill vacuum test system according to ASTM C1244.

3.4.3 Water Testing

Perform water testing according to the contract documents and precast concrete producer's recommendations.

-- End of Section --

SECTION 04 20 00

UNIT MASONRY
11/15

PART 1 GENERAL

1.1 REFERENCES

The publications listed below form a part of this specification to the extent referenced. The publications are referred to within the text by the basic designation only.

AMERICAN CONCRETE INSTITUTE INTERNATIONAL (ACI)

ACI 216.1	(2014) Code Requirements for Determining Fire Resistance of Concrete and Masonry Construction Assemblies
ACI SP-66	(2004) ACI Detailing Manual

ASTM INTERNATIONAL (ASTM)

ASTM A1008/A1008M	(2016) Standard Specification for Steel, Sheet, Cold-Rolled, Carbon, Structural, High-Strength Low-Alloy and High-Strength Low-Alloy with Improved Formability, Solution Hardened, and Bake Hardened
ASTM A1064/A1064M	(2016b) Standard Specification for Carbon-Steel Wire and Welded Wire Reinforcement, Plain and Deformed, for Concrete
ASTM A153/A153M	(2016) Standard Specification for Zinc Coating (Hot-Dip) on Iron and Steel Hardware
ASTM A167	(2011) Standard Specification for Stainless and Heat-Resisting Chromium-Nickel Steel Plate, Sheet, and Strip
ASTM A185/A185M	(2007) Standard Specification for Steel Welded Wire Reinforcement, Plain, for Concrete
ASTM A615/A615M	(2016) Standard Specification for Deformed and Plain Carbon-Steel Bars for Concrete Reinforcement
ASTM A641/A641M	(2009a; R 2014) Standard Specification for Zinc-Coated (Galvanized) Carbon Steel Wire
ASTM A653/A653M	(2015; E 2016) Standard Specification for Steel Sheet, Zinc-Coated (Galvanized) or Zinc-Iron Alloy-Coated (Galvannealed) by

	the Hot-Dip Process
ASTM A951/A951M	(2011) Standard Specification for Steel Wire for Masonry Joint Reinforcement
ASTM A996/A996M	(2016) Standard Specification for Rail-Steel and Axle-Steel Deformed Bars for Concrete Reinforcement
ASTM B370	(2012) Standard Specification for Copper Sheet and Strip for Building Construction
ASTM C1019	(2014) Standard Test Method for Sampling and Testing Grout
ASTM C129	(2014a) Standard Specification for Nonloadbearing Concrete Masonry Units
ASTM C1384	(2012a) Standard Specification for Admixtures for Masonry Mortars
ASTM C1611/C1611M	(2014) Standard Test Method for Slump Flow of Self-Consolidating Concrete
ASTM C1634	(2011) Standard Specification for Concrete Facing Brick
ASTM C207	(2006; R 2011) Standard Specification for Hydrated Lime for Masonry Purposes
ASTM C216	(2016) Facing Brick (Solid Masonry Units Made from Clay or Shale)
ASTM C270	(2014a) Standard Specification for Mortar for Unit Masonry
ASTM C476	(2016) Standard Specification for Grout for Masonry
ASTM C494/C494M	(2016) Standard Specification for Chemical Admixtures for Concrete
ASTM C55	(2014a) Concrete Brick
ASTM C62	(2013a) Building Brick (Solid Masonry Units Made from Clay or Shale)
ASTM C641	(2009) Staining Materials in Lightweight Concrete Aggregates
ASTM C652	(2015) Hollow Brick (Hollow Masonry Units Made from Clay or Shale)
ASTM C67	(2014) Standard Test Methods for Sampling and Testing Brick and Structural Clay Tile
ASTM C73	(2014) Calcium Silicate Brick (Sand-Lime Brick)

ASTM C780	(2015a) Preconstruction and Construction Evaluation of Mortars for Plain and Reinforced Unit Masonry
ASTM C979/C979M	(2016) Standard Specification for Pigments for Integrally Colored Concrete
ASTM D2000	(2012) Standard Classification System for Rubber Products in Automotive Applications
ASTM D2287	(2012) Nonrigid Vinyl Chloride Polymer and Copolymer Molding and Extrusion Compounds
ASTM E514/E514M	(2014a) Standard Test Method for Water Penetration and Leakage Through Masonry

THE MASONRY SOCIETY (TMS)

TMS MSJC	(2011) Masonry Standard Joint Committee's (MSJC) Book - Building Code Requirements and Specification for Masonry Structures, Containing TMS 402/ACI 530/ASCE 5, TMS 602/ACI 530.1/ASCE 6, and Companion Commentaries

1.2 SUBMITTALS

Government approval is required for submittals with a "G" designation; submittals not having a "G" designation are for Contractor Quality Control approval. Submittals with an "S" are for inclusion in the Sustainability Notebook, in conformance to Section 01 33 29 SUSTAINABILITY REPORTING. Submit the following in accordance with Section 01 33 00 SUBMITTAL PROCEDURES:

SD-02 Shop Drawings

Cut CMU Drawings; G
Reinforcement Detail Drawings; G

SD-03 Product Data

Hot Weather Procedures;
Cold Weather Procedures;
Clay or Shale Brick; G

Salvaged Brick; G
Cement; G
Cementitious Materials; G

SD-04 Samples

Mock-Up Panel;
Clay or Shale Brick; G

Concrete Masonry Units (CMU); G

Admixtures for Masonry Mortar;
Anchors, Ties, and Bar Positioners; G
Joint Reinforcement; G
Clay Masonry Expansion-Joint Materials; G

SD-05 Design Data

Masonry Compressive Strength; G
Fire-Rated Concrete Masonry Units
Bracing Calculations; G

SD-06 Test Reports

Efflorescence Test
Fire-Rated Concrete Masonry Units
Field Testing of Mortar
Field Testing of Grout

Single-Wythe Masonry Wall Water Penetration Test

SD-07 Certificates

Special Masonry Inspector Qualifications
Clay or Shale Brick

Concrete Masonry Units (CMU)
Concrete Brick

Cementitious Materials
Admixtures for Masonry Mortar
Admixtures for Grout
Anchors, Ties, and Bar Positioners
Joint Reinforcement
Insulation

SD-08 Manufacturer's Instructions

Admixtures for Masonry Mortar
Admixtures for Grout

SD-10 Operation and Maintenance Data

Take-Back Program

SD-11 Closeout Submittals

Recycled Content of Clayor Shale Brick; S
Recycled Content of Cement; S

1.3 QUALITY ASSURANCE

1.3.1 Masonry Mock-Up Panels

1.3.1.1 Mock-Up Panel Location

After material samples are approved and prior to starting masonry work, construct a mock-up panel for each type and color of masonry required. At least 48 hours prior to constructing the panel or panels, submit written

notification to the Contracting Officer. Do not build-in mock-up panels as part of the structure; locate mock-up panels where directed. Construct portable mock-up panels or locate in an area where they will not be disrupted during construction.

1.3.1.2 Mock-Up Panel Configuration

Construct mock-up panels L-shaped or otherwise configured to represent all of the wall elements. Construct panels of the size necessary to demonstrate the acceptable level of workmanship for each type of masonry represented on the project. Provide a straight panel or a leg of an L-shaped panel of minimum size 8 feet long by 4 feet high.

1.3.1.3 Mock-Up Panel Composition

Show full color range, texture, and bond pattern of the masonry work. Demonstrate mortar joint tooling; grouting of reinforced vertical cores, collar joints, bond beams, and lintels; positioning, securing, and lapping of reinforcing steel; positioning and lapping of joint reinforcement (including prefabricated corners); and cleaning of masonry work during the construction of the panels. Also include installation or application procedures for anchors, wall ties, CMU control joints, brick expansion joints, flashing, brick soldier, row lock courses and weeps. Include a L-shaped or otherwise configured to represent all of the wall elements. Panels shall represent acceptable level of workmanship for each type of masonry presented on the project. When the panel represents reinforced masonry, include a 2 by 2 foot opening placed at least 2 feet above the panel base and 2 feet away from all free edges, corners, and control joints. Provide required reinforcing around this opening as well as at wall corners and control joints.

1.3.1.4 Mock-Up Panel Construction Method

Where anchored veneer walls or cavity walls are required, demonstrate and receive approval for the method of construction; i.e., either bring up the two wythes together or separately, with the insulation and appropriate ties placed within the specified tolerances across the cavity. Demonstrate provisions to preclude mortar or grout droppings in the cavity and to provide a clear open air space of the dimensions shown on the drawings. Where masonry is to be grouted, demonstrate and receive approval on the method that will be used to bring up the masonry wythes; support the reinforcing bars; and grout cells, bond beams, lintels, and collar joints using the requirements specified herein. When water-repellent is specified to be applied to the masonry, apply the approved product to the mock-up panel. Construct panels on a properly designed concrete foundation.

1.3.1.5 Mock-Up Panel Purpose

The completed panels is used as the standard of workmanship for the type of masonry represented. Do not commence masonry work until the mock-up panel for that type of masonry construction has been completed and approved. Protect panels from the weather and construction operations until the masonry work has been completed and approved. Perform cleaning procedures on the mockup and obtain approval of the Contracting Officer prior to cleaning the building. After completion of the work, completely remove the mock-up panels, including all foundation concrete, from the construction site.

1.3.2 Special Masonry Inspector Qualifications

Refer to Section 01 45 35 SPECIAL INSPECTIONS for qualifications and responsibilities of the masonry special inspector.

1.4 DELIVERY, STORAGE, AND HANDLING

Deliver, store, handle, and protect material to avoid chipping, breakage, and contact with soil or contaminating material. Store and prepare materials in already disturbed areas to minimize project site disturbance and size of project site.

1.4.1 Masonry Units

Cover and protect masonry units from precipitation. Conform to handling and storage requirements of TMS MSJC.

a. Pack glazed brick, glazed structural clay tile, and prefaced concrete masonry units in the manufacturer's standard paper cartons, trays, or shrink wrapped pallets with a divider between each unit. Do not stack pallets. Do not remove units from cartons until cartons are placed on scaffolds or in the location where units are to be laid.

b. Mark prefabricated lintels on top sides to show either the lintel schedule number or the number and size of top and bottom bars.

1.4.2 Reinforcement, Anchors, and Ties

Store steel reinforcing bars, coated anchors, ties, and joint reinforcement above the ground. Maintain steel reinforcing bars and uncoated ties free of loose mill scale and loose rust.

1.4.3 Cementitious Materials, Sand and Aggregates

Deliver cementitious and other packaged materials in unopened containers, plainly marked and labeled with manufacturers' names and brands. Store cementitious material in dry, weathertight enclosures or completely cover. Handle cementitious materials in a manner that will prevent the inclusion of foreign materials and damage by water or dampness. Store sand and aggregates in a manner to prevent contamination and segregation.

1.5 PROJECT/SITE CONDITIONS

Conform to TMS MSJC for hot and cold weather masonry erection.

1.5.1 Hot Weather Procedures

When ambient air temperature exceeds 100 degrees F, or exceeds 90 degrees F and the wind velocity is greater than 8 mph, comply with TMS MSJC Article 1.8 D for: preparation prior to conducting masonry work; construction while masonry work is in progress; and protection for newly completed masonry.

1.5.2 Cold Weather Procedures

When ambient temperature is below 40 degrees F, comply with TMS MSJC Article 1.8 C for: preparation prior to conducting masonry work; construction while masonry work is in progress; and protection for newly completed masonry.

PART 2 PRODUCTS

2.1 SYSTEM DESCRIPTION

2.1.1 Design - Specified Compressive Strength of Masonry

The specified compressive strength of masonry, f'm, is 1500 psi.

2.1.2 Performance - Verify Masonry Compressive Strength

Verify specified compressive strength of masonry using the "Unit Strength Method" of TMS MSJC. Submit calculations and certifications of unit and mortar strength.

Verify specified compressive strength of masonry using the "Prism Test Method" of TMS MSJC when the "Unit Strength Method" cannot be used. Submit test results.

2.2 MANUFACTURED UNITS

2.2.1 General Requirements

Do not change the source of materials, which will affect the appearance of the finished work, after the work has started except with Contracting Officer's approval. Submit test reports from an approved independent laboratory. Certify test reports on a previously tested material as the same materials as that proposed for use in this project. Submit certificates of compliance stating that the materials meet the specified requirements.

2.2.2 Clay or Shale Brick

2.2.2.1 General

2.2.2.1.1 Sample Submittal

Submit brick samples as specified, showing the color range and texture of clay or shale brick. Limit units used on the project to those that conform to the approved sample. Submit sample of colored mortar with applicable masonry unit and color samples of three stretcher units and one unit for each type of special shape.

2.2.2.1.2 Uniformity

Manufacture bricks at one time and from the same run. Deliver clay or shale brick units factory-blended to provide a uniform appearance and color range in the completed wall.

2.2.2.1.3 Recycled Content

Units may contain post-consumer or post-industrial recycled content.

2.2.2.1.4 Efflorescence Test

Test clay brick that will be exposed to weathering for efflorescence in accordance with ASTM C67. Schedule tests far enough in advance of starting masonry work to permit retesting if necessary. Units meeting the definition of "effloresced" are subject to rejection.

2.2.2.2 Solid Clay or Shale Brick

Provide solid clay or shale brick that conforms to ASTM C216, Type FBS ASTM C62. Provide brick with minimum compressive strength of 1500 psi. Where brick cores, recesses, or deformation would be exposed to view, provide 100 percent solid units. Provide brick with texture and color tange to match the brick indicated.

Provide brick with specified sizes.

a. Modular size, 3-5/8 inches thick, 2-1/4 inches high, and 7-5/8 inches long.

2.2.2.3 Hollow Clay or Shale Brick

Provide hollow clay or shale brick that conforms to ASTM C652, Type HBS .

a. Provide brick size of 3-5/8 inches thick, 2-1/4 inches high, and 8 inches long.

b. Where vertical reinforcement is shown in hollow brick, provide hollow brick designed to provide precise vertical alignment of the cells, with minimum cell dimension of 2-1/2 inches.

c. Provide hollow brick with minimum compressive strength of 1500 psi.

2.2.2.4 Salvaged Brick

Use lead-free salvaged bricks and other masonry units in place of new bricks or masonry units as indicated. Wash bricks salvaged from foundries or industrial buildings with appropriate metal-dust removing cleaner. When using salvaged brick, select salvaged exterior face bricks from exterior locations.

Provide salvaged bricks that meet standards of new bricks otherwise used in application, and cleaned of all mortar prior to use. Submit documentation certifying products are from salvaged/recovered sources. Indicate relative dollar value of salvaged content products to total dollar value of products included in project.

2.2.3 Concrete Units

2.2.3.1 Aggregates

Test lightweight aggregates, and blends of lightweight and heavier aggregates in proportions used in producing the units, for stain-producing iron compounds in accordance with ASTM C641,visual classification method. Do not incorporate aggregates for which the iron stain deposited on the filter paper exceeds the "light stain" classification.

Use industrial waste by-products (air-cooled slag, cinders, or bottom ash), ground waste glass and concrete, granulated slag, and expanded slag in aggregates.

2.2.3.2 Concrete Masonry Units (CMU)

2.2.3.2.1 Cement

Use only cement that has a low alkali content and is of one brand.

2.2.3.2.2 Recycled Content

Units may contain post-consumer or post-industrial recycled content.

2.2.3.2.3 Size

Provide units with specified dimension of 3-5/8 inches wide, 2-1/4 inches high, and 8 inches long.

2.2.3.2.4 Surfaces

Provide units with exposed surfaces that are smooth and of uniform texture.

2.2.3.2.5 Weather Exposure

Provide concrete masonry units with water-repellant admixture added during manufacture where units will be exposed to weather..

2.2.3.2.6 Unit Types

a. Hollow Non-Load-Bearing Units: ASTM C129, lightweight or normal weight. Load-bearing units may be provided in lieu of non-load-bearing units.

2.2.3.2.7 Jamb Units

Provide jamb units of the shapes and sizes to conform with wall units. Solid units may be incorporated in the masonry work where necessary to fill out at corners, gable slopes, and elsewhere as approved.

Provide sash jamb units with a 3/4 by 3/4 inch groove near the center at end of each unit.

2.2.3.3 Architectural Units

Provide architectural units with patterned face shell: As indicated on drawings.

Provide units that are integrally colored during manufacture, with color indicated on drawings.

2.2.3.4 Fire-Rated Concrete Masonry Units

For indicated fire-rated construction, provide concrete masonry units of minimum equivalent thickness for the fire rating indicated and the corresponding type of aggregates indicated in TABLE I. Units containing more than one of the aggregates listed in TABLE I will be rated by linear interpolation based on the percent by dry-rodded volume of each aggregate used in manufacturing the units.

TABLE I FIRE-RATED CONCRETE MASONRY UNITS							
Aggregate Type	Minimum Equivalent Thickness for Fire-Resistance Rating, inch						
	1/2 hour	3/4 hour	1 hour	1-1/2 hour	2 hours	3 hours	4 hours
Calcareous or siliceous gravel (other than limestone)	2.0	2.4	2.8	3.6	4.2	5.3	6.2
Limestone, cinders, or air-cooled slag	1.9	2.3	2.7	3.4	4.0	5.0	5.9
Expanded clay, expanded shale, or expanded slate	1.8	2.2	2.6	3.3	3.6	4.4	5.1
Expanded slag or pumice	1.5	1.9	2.1	2.7	3.2	4.0	4.7

Determine equivalent thickness in accordance with ACI 216.1. Where walls are to receive plaster or be faced with brick, or otherwise form an assembly; include the thickness of plaster or brick or other material in the assembly in determining the equivalent thickness. Submit calculation results.

2.2.3.5 Concrete Brick

2.2.3.5.1 Common Concrete Brick

Provide common concrete brick conforming to ASTM C55. Common concrete brick may be used where necessary for filling out in concrete masonry unit construction.

2.2.3.5.2 Concrete Brick for Facing

Provide concrete brick for exposed applications that conforms to ASTM C1634. Submit samples as specified.

2.2.3.5.3 Sand-Lime Brick

Provide calcium-silicate (sand-lime) that conforms to ASTM C73, Grade SW, approximately 3-5/8 inches thick, 2-1/4 inches high, and 8 inches long or modular, with smooth surfaces and natural color.

2.3 EQUIPMENT

2.3.1 Vibrators

Maintain at least one spare vibrator on site at all times.

2.3.2 Grout Pumps

Pumping through aluminum tubes is not permitted.

2.4 MATERIALS

2.4.1 Mortar Materials

2.4.1.1 Cementitious Materials

Provide cementitious materials that conform to those permitted by ASTM C270.

2.4.1.2 Hydrated Lime and Alternates

Provide lime that conforms to one of the materials permitted by ASTM C207 for use in combination with portland cement, hydraulic cement, and blended hydraulic cement. Do not use lime in combination with masonry cement or mortar cement.

2.4.1.3 Colored Mortar

Use mortar pigment that conforms to ASTM C979/C979M. Add pigment to mortar to produce a uniform color matching what is specified on Architectural drawings. Furnish pigments in accurately pre-measured and packaged units that can be added to a measured amount of cementitious materials or supply pigments via preblended cementitious materials or dry mortar mix.

a. In masonry cement or mortar cement, do not exceed 5 percent of cement weight for mineral oxide pigment; do not exceed 1 percent of cement weight for carbon black pigment.

b. In cement-lime mortar mix, do not exceed 10 percent of cementitious materials' weight for mineral oxide pigment; do not exceed 2 percent of cementitious materials' weight for carbon black pigment.

2.4.1.4 Admixtures for Masonry Mortar

In cold weather, use a non-chloride based accelerating admixture that conforms to ASTM C1384, unless Type III portland cement is used in the mortar.

In showers and kitchens, use mortar that contains a water-repellent admixture that conforms to ASTM C1384. Provide a water-repellent admixture, conforming to ASTM C1384 and of the same brand and manufacturer as the block's integral water-repellent, in the mortar used to place concrete masonry units that have an integral water-repellent admixture.

2.4.1.5 Aggregate and Water

Provide aggregate (sand) and water that conform to materials permitted by ASTM C270.

2.4.2 Grout and Ready-Mix Grout Materials

2.4.2.1 Cementitious Materials for Grout

Provide cementitious materials that conform to those permitted by ASTM C476.

2.4.2.2 Admixtures for Grout

Water-reducing admixtures that conform to ASTM C494/C494M Type F or G and viscosity-modifying admixtures that conform to ASTM C494/C494M Type S are permitted for use in grout. Other admixtures require approval by the

Contracting Officer.

In cold weather, a non-chloride based accelerating admixture may be used subject to approval by the Contracting Officer; use accelerating admixture that is non-corrosive and conforms to ASTM C494/C494M, Type C.

2.4.2.3 Aggregate and Water

Provide fine and coarse aggregates and water that conform to materials permitted by ASTM C476.

2.5 MORTAR AND GROUT MIXES

2.5.1 Mortar Mix

a. Provide mortar Type M unless specified otherwise herein.

2.5.2 Grout and Ready Mix Grout Mix

Use grout that conforms to ASTM C476, fine . Use conventional grout with a slump between 8 and 11 inches. Use self-consolidating grout with slump flow of 24 to 30 inches and a visual stability index (VSI) not greater than 1. Provide minimum grout strength of 2000 psi in 28 days, as tested in accordance with ASTM C1019. Do not change proportions and do not use materials with different physical or chemical characteristics in grout for the work unless additional evidence is furnished that grout meets the specified requirements. Use ready-mixed grout that conforms to ASTM C476.

2.6 ACCESSORIES

2.6.1 Grout Barriers

Grout barriers for vertical cores that consist of fine mesh wire, fiberglass, or expanded metal.

2.6.2 Anchors, Ties, and Bar Positioners

2.6.2.1 General

a. Fabricate anchors and ties without drips or crimps. Size anchors and ties to provide a minimum of 5/8 inch mortar cover from each face of masonry.

b. Fabricate steel wire anchors and ties shall from wire conforming to ASTM A1064/A1064M and hot-dip galvanize in accordance with ASTM A153/A153M.

c. Fabricate joint reinforcement in conformance with ASTM A951/A951M. Hot dip galvanize joint reinforcement in exterior walls and in interior walls exposed to moist environment in conformance with ASTM A153/A153M. Galvanize joint reinforcement in other interior walls in conformance with ASTM A641/A641M; coordinate with paragraph JOINT REINFORCEMENT below.

d. Fabricate sheet metal anchors and ties in conformance with ASTM A1008/A1008M. Hot dip galvanize sheet metal anchors and ties in exterior walls and in interior walls exposed to moist environment in compliance with ASTM A153/A153M Class B. Galvanize sheet metal anchors and ties in other interior walls in compliance with

ASTM A653/A653M, Coating Designation G60.

e. Submit two anchors, ties and bar positioners of each type used, as samples.

2.6.2.2 Wire Mesh Anchors

Provide wire mesh anchors of 1/4 inch mesh galvanized hardware cloth, conforming to ASTM A185/A185M, with length not less than 16 inches, at intersections of interior non-bearing masonry walls.

2.6.2.3 Adjustable Anchors

2.6.2.3.1 Anchorage to Structural Steel

Provide hot-dip galvanized adjustable anchors for connecting masonry walls to the structural steel frame as detailed on the drawings . Provide zinc-rich paint for touching up paint after welding galvanized anchors to structural steel.

2.6.2.3.2 Anchorage of Veneer to Light Gauge Steel or Concrete Backing

Use the following type of adjustable anchor to connect veneer to light gauge steel or concrete backing:

a. wire anchors of minimum size W1.7 with ends bent to form a minimum 2 inches extension and without drips;

Do not exceed 1/16 inch clearance between connecting parts of the tie. Assemble adjustable anchors to prevent disengagement. Provide pintle anchors with one or more pintle legs of wire size W2.8 and an offset not exceeding 1-1/4 inch.

2.6.2.4 Veneer Anchor Screws

Provide screws for attachment of veneer anchors to cold-formed steel framing members of size as required by design to provide the needed pullout load capacity but not less than No. 12. Provide length of screws such that the screws penetrate the holding member by not less than 5/8 inch.

2.6.2.5 Bar Positioners

Factory-fabricate bar positioners, used to prevent displacement of reinforcing bars during the course of construction, from 9 gauge steel wire or equivalent, and hot-dip galvanized.

2.6.3 Joint Reinforcement

Factory fabricate joint reinforcement in conformance with ASTM A951/A951M, welded construction. Provide ladder type joint reinforcement, having one longitudinal wire in the mortar bed of each face shell for hollow units and one wire for solid units and with all wires a minimum of 9 gauge. Size joint reinforcement to provide a minimum of 5/8 inch cover from each face. Space crosswires not more than 16 inches. Provide joint reinforcement for straight runs in flat sections not less than 10 feet

long. Provide joint reinforcement with factory formed corners and intersections. If approved for use, joint reinforcement may be furnished with adjustable wall tie features. Submit one piece of each type used, including corner and wall intersection pieces, showing at least two cross wires.

2.6.4 Reinforcing Steel Bars

Reinforcing steel bars and rods shall conform to ASTM A615/A615M or ASTM A996/A996M, Grade 60.

2.6.5 Concrete Masonry Control Joint Keys

Provide control joint keys of a factory fabricated solid section of natural or synthetic rubber (or combination thereof) conforming to ASTM D2000 M2AA-805 with a minimum durometer hardness of 80 or polyvinyl chloride conforming to ASTM D2287 Type PVC 654-4 with a minimum durometer hardness of 85. Form the control joint key with a solid shear section not less than 5/8 inch thick and 3/8 inch thick flanges, with a tolerance of plus or minus 1/16 inch, to fit neatly, but without forcing, in masonry unit jamb sash grooves.

2.6.6 Clay Masonry Expansion-Joint Materials

Provide backer rod and sealant, adequate to accommodate joint compression and extension equal to 50 percent of the width of the joint. Provide the backer rod of compressible rod stock of closed cell polyethylene foam, polyurethane foam, butyl rubber foam, or other flexible, nonabsorptive material as recommended by the sealant manufacturer. Provide sealant in conformance with Section 07 92 00 JOINT SEALANTS with a maximum volatile organic compound (VOC) content of 600 grams/liter.

Submit one piece of each type of material used.

2.6.7 Through Wall Flashing and Weeps

2.6.7.1 General

Provide coated copper, copper or stainless steel sheet, except that flashing indicated to terminate in reglets shall be metal or coated-metal flashing and except that the material shall be one which is not adversely affected by dampproofing material.

2.6.7.2 Coated-Copper Flashing

Provide 7 ounce, electrolytic copper sheet, uniformly coated on both sides with acidproof, alkaliproof, asphalt impregnated kraft paper or polyethylene sheets.

2.6.7.3 Copper or Stainless Steel Flashing

Provide copper sheet, complying with ASTM B370, minimum 16 ounce weight; or stainless steel, ASTM A167, Type 304 or 316, 0.015 inch thick, No. 2D finish. Where indicated, provide with factory-fabricated deformations that mechanically bond flashing against horizontal movement in all directions, where deformations consist of dimples, diagonal corrugations, or a combination of dimples and transverse corrugations.

2.6.7.4 Weep Ventilators

Provide weep ventilators that are prefabricated from stainless steel or plastic. Provide inserts with grill or louver-type openings designed to allow the passage of moisture from cavities and to prevent the entrance of insects, and with a rectangular closure strip to prevent mortar droppings from clogging the opening. Provide ventilators with compressible flanges to fit in a standard 3/8 inch wide mortar joint and with height equal to the nominal height of the unit..

2.6.7.5 Metal Drip Edge

Provide stainless steel drip edge, 15-mil thick, hemmed edges, with down-turned drip at the outside edge and upturned dam at the inside edge for use with membrane flashings.

2.6.8 RIGID BOARD-TYPE INSULATION

Provide rigid board-type insulation as specified in Section 07 21 13 BOARD AND BLOCK INSULATION.

PART 3 EXECUTION

3.1 EXAMINATION

Prior to start of work, verify the applicable conditions as set forth in TMS MSJC, inspection.

3.2 PREPARATION

3.2.1 Stains

Protect exposed surfaces from mortar and other stains. When mortar joints are tooled, remove mortar from exposed surfaces with fiber brushes and wooden paddles. Protect base of walls from splash stains by covering adjacent ground with sand, sawdust, or polyethylene.

3.2.2 Loads

Do not apply uniform loads for at least 12 hours or concentrated loads for at least 72 hours after masonry is constructed. Provide temporary bracing as required.

3.2.3 Concrete Surfaces

Where masonry is to be placed, clean concrete of laitance, dust, dirt, oil, organic matter, or other foreign materials and slightly roughen to provide a surface texture with a depth of at least 1/8 inch. Sandblast, if necessary, to remove laitance from pores and to expose the aggregate.

3.2.4 Shelf Angles

Adjust shelf angles as required to keep the masonry level and at the proper elevation.

3.2.5 Bracing

Provide bracing and scaffolding necessary for masonry work. Design bracing to resist wind pressure as required by OSHA and local codes and submit bracing calculations, sealed by a registered professional

engineer. Do not remove bracing in less than 10 days.

3.3 ERECTION

3.3.1 General

a. Coordinate masonry work with the work of other trades to accommodate built-in items and to avoid cutting and patching. Lay masonry units in the indicated bond pattern. Lay facing courses level with back-up courses, unless the use of adjustable ties has been approved in which case the tolerances is plus or minus 1/2 inch. Adjust each unit to its final position while mortar is still soft and has plastic consistency.

b. Remove and clean units that have been disturbed after the mortar has stiffened, and relay with fresh mortar. Keep air spaces, cavities, chases, expansion joints, and spaces to be grouted free from mortar and other debris. Select units to be used in exposed masonry surfaces from those having the least amount of chipped edges or other imperfections detracting from the appearance of the finished work.

c. When necessary to temporarily discontinue the work, step (rack) back the masonry for joining when work resumes. Toothing may be used only when specifically approved by the Contracting Officer. Before resuming work, remove loose mortar and thoroughly clean the exposed joint. Cover the top of walls subjected to rain or snow with nonstaining waterproof covering or membrane when work is not in process. Extend the covering a minimum of 610 mm 2 feet down on each side of the wall and hold securely in place.

d. Ensure that units being laid and surfaces to receive units are free of water film and frost. Lay solid units in a nonfurrowed full bed of mortar. Bevel mortar for veneer wythes and slope down toward the cavity side. Shove units into place so that the vertical joints are tight. Completely fill vertical joints between solid units with mortar, except where indicated at control, expansion, and isolation joints. Place hollow units so that mortar extends to the depth of the face shell at heads and beds, unless otherwise indicated. Mortar will be permitted to protrude up to 1/2 inch into the space or cells to be grouted. Provide means to prevent mortar from dropping into the space below or clean grout spaces prior to grouting.

e. In multi-wythe construction with collar joints no more than 3/4 inch wide, bring up the inner wythe not more than 16 inches ahead of the outer wythe. Fill collar joints with mortar during the laying of the facing wythe, and filling shall not lag the laying of the facing wythe by back-buttering each unit as it is laid.

3.3.1.1 Jointing

Tool mortar joints when the mortar is thumbprint hard. Tool horizontal joints after tooling vertical joints. Brush mortar joints to remove loose and excess mortar.

3.3.1.1.1 Tooled Joints

Tool mortar joints in exposed exterior and interior masonry surfaces concave , using a jointer that is slightly larger than the joint width so that complete contact is made along the edges of the unit. Perform

tooling so that the mortar is compressed and the joint surface is sealed. Use a jointer of sufficient length to obtain a straight and true mortar joint.

3.3.1.1.2 Flush Joints

Flush cut mortar joints in concealed masonry surfaces and joints at electrical outlet boxes in wet areas. Finish flush cut joints by cutting off the mortar flush with the face of the wall. Point joints in unparged masonry walls below grade tight. For architectural units, such as fluted units, completely fill both the head and bed joints and flush cut.

3.3.1.1.3 Door and Window Frame Joints

On the exposed interior side of exterior frames, joints between frames and abutting masonry walls shall be raked to a depth of 3/8 inch. On the exterior side of exterior frames, joints between frames and abutting masonry walls shall be raked to a depth of 3/8 inch.

3.3.1.1.4 Joint Widths

a. Construct brick masonry with mortar joint widths equal to the difference between the specified and nominal dimensions of the unit, within tolerances permitted by TMS MSJC.

b. Provide 3/8 inch wide mortar joints in concrete masonry, except for prefaced concrete masonry units.

c. Provide 3/8 inch wide mortar joints on unfaced side of prefaced concrete masonry units and not less than 3/16 inch nor more than 1/4 inch wide on prefaced side.

d. Maintain mortar joint widths within tolerances permitted by TMS MSJC

3.3.1.2 Cutting and Fitting

Use full units of the proper size wherever possible, in lieu of cut units. Locate cut units where they would have the least impact on the architectural aesthetic goals of the facility. Perform cutting and fitting, including that required to accommodate the work of others, by masonry mechanics using power masonry saws. Concrete masonry units may be wet or dry cut. Before being placed in the work, dry wet-cut units to the same surface-dry appearance as uncut units being laid in the wall. Provide cut edges that are clean, true and sharp.

a. Carefully make openings in the masonry so that wall plates, cover plates or escutcheons required by the installation will completely conceal the openings and will have bottoms parallel with the masonry bed joints. Provide reinforced masonry lintels above openings over 12 inches wide for pipes, ducts, cable trays, and other wall penetrations, unless steel sleeves are used.

b. Do not reduce masonry units in size by more than one-third in height and one-half in length. Do not locate cut products at ends of walls, corners, and other openings.

3.3.1.3 Unfinished Work

Rack back unfinished work for joining with new work. Toothing may be

resorted to only when specifically approved by the Contracting Officer. Remove loose mortar and thoroughly clean the exposed joints before laying new work.

3.3.1.4 Clay Masonry Expansion Joints

Provide clay masonry expansion joints as indicated. Construct by filling with a compressible foam pad. Ensure that no mortar or other noncompressible materials are within the joint. Install backer rod and sealant in accordance with Section 07 92 00 JOINT SEALANTS.

3.3.1.5 Control Joints

Provide control joints in concrete masonry as indicated. Construct by raking out mortar within the head joint using special control-joint units using sash jamb units with control joint key using open end stretcher units placed with the closed end at the joint in accordance with the details shown on the Drawings. Form a continuous vertical joint at control joint locations, including through bond beams, by utilizing half blocks in alternating courses on each side of the joint. Interrupt the control joint key in courses containing continuous bond beam reinforcement. Do not interrupt the horizontal reinforcement and grout at the control joint.

Where mortar was placed in the joint, rake both faces of the control joints to a depth of 3/4 inch. Install backer rod and sealant on both faces in accordance with Section 07 92 00 JOINT SEALANTS.

3.3.1.6 Decorative Architectural Units

Place decorative masonry units with the patterned face shell properly aligned in the completed wall.

3.3.2 Clay or Shale Brick Masonry

3.3.2.1 Brick Placement

Blend all brick at the jobsite from several cubes to produce a uniform appearance when installed. An observable "banding" or "layering" of colors or textures caused by improperly mixed brick is unacceptable. Lay brick facing with the better face exposed. Lay brick in running bond with each course bonded at corners, unless otherwise indicated. Lay molded brick with the frog side down. Do not lay brick that is cored, recessed, or has other deformations in a manner that allows those deformations to be exposed to view; lay 100 percent solid units in these areas. Completely fill head and bed joints of solid units with mortar. Lay hollow units with mortar joints as specified for concrete masonry units.

Place exterior face of salvaged bricks towards the exterior.

3.3.2.2 Wetting of Units

Wetting of clay, shale brick, or hollow brick units having an initial rate of absorption of more than 1 gram per minute per square inch of bed surface shall be in conformance with ASTM C67. Ensure that each unit is nearly saturated when wetted but surface dry when laid.

Test clay or shale brick daily on the job, prior to laying, as follows: Using a wax pencil, draw a circle the size of a quarter on five randomly

selected bricks. Apply 20 drops of water with a medicine dropper to the surface within the circle on each brick. If the average time that the water is completely absorbed in the five bricks is less than 1-1/2 minutes, wet bricks represented by the five bricks tested.

3.3.2.3 Brick Sills

Lay brick on edge, slope not less than 3/4 inch downward to the outside, and project not less than 1/2 inch beyond the face of the wall to form a wash and drip. Fill all joints solidly with mortar and tool.

3.3.3 Anchored Veneer Construction

a. Construct exterior masonry wythes to the thickness indicated on the drawings. Provide a minimum inch air space behind the masonry veneer as indicated on drawings. Provide means to ensure that the cavity space and flashings are kept clean of mortar droppings and other loose debris. Maintain chases and raked-out joints free from mortar and debris.

b. Place masonry bond pattern indicated on architectural drawing. Place longitudinal reinforcement, consisting of at least one continuous hot-dip galvanized W 1.7 (9gauge) steel wire, in the veneer wythe when laid in stack bond.

c. For veneer over stud framing, do not install veneer until the exterior sheathing, moisture barrier, veneer anchors and flashing have been installed on the backing. Take extreme care to avoid damage to the moisture barrier and flashing during construction of the masonry veneer. Repair or replace portions of the moisture barrier and flashing that are damaged prior to completion of the veneer. Provide a continuous cavity as indicated.

d. For veneer with a masonry backup wythe, lay up both the inner and the outer wythes together except when adjustable joint reinforcement assemblies are approved for use. When both wythes are not brought up together, install through-wall flashings with the exterior wythe, securing the top edge of the flashing with a termination bar and sealant, or protect flashings that are installed with the interior wythe from damage until they are fully enclosed in the wall.

e. Provide anchors (ties) to connect the veneer to its backing in sufficient quantity to comply with the following requirements: maximum wall area per anchor {tie) of 256 square inches, and maximum vertical spacing of 16 inches, and maximum horizontal spacing of 16 inches. Provide additional anchors around openings larger than 16 inch in either direction. Space anchors around perimeter of opening at a maximum of 24 inches on center. Place anchors within 12 inches of openings. Anchors with drips are not permitted.

f. With solid units, embed anchors in mortar joint and extend into the veneer a minimum of 1-1/2 inch, with at least 5/8 inch mortar cover to the outside face.

g. With hollow units, embed anchors in mortar or grout and extend into the veneer a minimum of 1-1/2 inch, with at least 5/8 inch mortar or grout cover to outside face.

3.3.4 Reinforced, Single Wythe Concrete Masonry Units Walls

3.3.4.1 Concrete Masonry Unit Placement

a. Fully bed units used to form piers, pilasters, columns, starting courses on footings, solid foundation walls, lintels, and beams, and where cells are to be filled with grout in mortar under both face shells and webs. Provide mortar beds under both face shells for other units. Mortar head joints for a distance in from the face of the unit not less than the thickness of the face shell.

b. Solidly grout foundation walls below grade.

c. Submit drawings showing elevations of walls exposed to view and indicating the location of all cut CMU products.

3.3.4.2 Preparation for Reinforcement

Lay units in such a manner as to preserve the unobstructed vertical continuity of cores to be grouted. Remove mortar protrusions extending 1/2 inch or more into cells before placing grout. Position reinforcing bars accurately as indicated before placing grout. Where vertical reinforcement occurs, fill cores solid with grout in accordance with paragraph PLACING GROUT in this Section.

3.3.5 ANCHORAGE

3.3.5.1 Anchorage to Structural Steel

Masonry shall be anchored to vertical structural steel framing with adjustable steel wire anchors spaced not over 16 inches on centers vertically, and if applicable, not over 24 inches on centers horizontally.

3.3.5.2 Anchorage at Intersecting Walls

Provide wire mesh anchors at maximum 16 inches spacing at intersections of interior non-bearing masonry walls.

3.3.6 Lintels

3.3.6.1 Masonry Lintels

Construct masonry lintels with lintel units filled solid with grout in all courses and reinforced with a minimum of two No. 4 bars in the bottom course unless otherwise indicated. Extend lintel reinforcement beyond each side of masonry opening 40 bar diameters or 24 inches, whichever is greater. Support reinforcing bars in place prior to grouting and locate 1/2 inch above the bottom inside surface of the lintel unit.

3.3.6.2 Precast Concrete and Steel Lintels

Provide precast concrete and steel lintels as shown on the Drawings. Set lintels in a full bed of mortar with faces plumb and true. Provide steel and precast lintels with a minimum bearing length of 8 inches unless otherwise indicated. In partially grouted masonry, provide fully grouted units under the full lintel bearing length, unless otherwise indicated.

3.3.7 Sills and Copings

Set sills and copings in a full bed of mortar with faces plumb and true.

Slope sills and copings to drain water. Mechanically anchor copings and sills longer than 4 feet as indicated.

3.4 INSTALLATION

3.4.1 Bar Reinforcement Installation

3.4.1.1 Preparation

Submit detail drawings showing bar splice locations. Identify bent bars on a bending diagram and reference and locate such bars on the drawings. Show wall dimensions, bar clearances, and wall openings. Utilize bending details that conform to the requirements of ACI SP-66. No approval will be given to the shop drawings until the Contractor certifies that all openings, including those for mechanical and electrical service, are shown. If, during construction, additional masonry openings are required, resubmit the approved shop drawings with the additional openings shown along with the proposed changes. Clearly highlight location of these additional openings. Provide wall elevation drawings with minimum scale of 1/4 inch per foot. Submit drawings including plans, elevations, and details of wall reinforcement; details of reinforcing bars at corners and wall intersections; offsets; tops, bottoms, and ends of walls; control and expansion joints; lintels; and wall openings.

Clean reinforcement of loose, flaky rust, scale, grease, mortar, grout, and other coatings that might destroy or reduce its bond prior to placing grout. Do not use bars with kinks or bends not shown on the approved shop drawings. Place reinforcement prior to grouting. Unless otherwise indicated, extend vertical wall reinforcement to within 2 inches of tops of walls.

3.4.1.2 Positioning Bars

a. Accurately place vertical bars within the cells at the positions indicated on the drawings. A minimum clearance of 1/2 inch shall be maintained between the bars and masonry units. Provide minimum clearance between parallel bars of 1/2 inch between the bars and masonry units for coarse grout and a minimum clearance of 1/4 inch between the bars and masonry units for fine grout. Provide minimum clearance between parallel bars of 1 inch or one diameter of the reinforcement, whichever is greater. Vertical reinforcement may be held in place using bar positioners located near the ends of each bar and at intermediate intervals of not more than 192 diameters of the reinforcement or by other means to prevent displacement beyond permitted tolerances. As masonry work progresses, secure vertical reinforcement to prevent displacement beyond allowable tolerances.

b. Wire column and pilaster lateral ties in position around the vertical reinforcing bars. Place lateral ties in contact with the vertical reinforcement and do not place in horizontal mortar bed joints.

c. Position horizontal reinforcing bars as indicated. Stagger splices in adjacent horizontal bars, unless otherwise indicated.

d. Form splices by lapping bars as indicated. Do not cut, bend or eliminate reinforcing bars. Foundation dowel bars may be field-bent when permitted by TMS MSJC.

3.4.1.3 Splices of Bar Reinforcement

Lap splice reinforcing bars as indicated. When used, provide welded or mechanical connections that develop at least 125 percent of the specified yield strength of the reinforcement.

3.4.2 Placing Grout

3.4.2.1 General

Fill cells containing reinforcing bars with grout. Solidly grout hollow masonry units in walls or partitions supporting plumbing, heating, or other mechanical fixtures, voids at door and window jambs, and other indicated spaces. Solidly grout cells under lintel bearings on each side of openings for full height of openings. Solidly grout walls below grade, lintels, and bond beams. Units other than open end units may require grouting each course to preclude voids in the units.

Discard site-mixed grout that is not placed within 1-1/2 hours after water is first added to the batch or when the specified slump is not met without adding water after initial mixing. Discard ready-mixed grout that does not meet the specified slump without adding water other than water that was added at the time of initial discharge. Allow sufficient time between grout lifts to preclude displacement or cracking of face shells of masonry units. Provide a grout shear key between lifts when grouting is delayed and the lower lift loses plasticity. If blowouts, flowouts, misalignment, or cracking of face shells should occur during construction, tear down the wall and rebuild.

3.4.2.2 Vertical Grout Barriers for Multi-Wythe Composite Walls

In multi-wythe composite walls, provide grout barriers in the collar join not more than 30 feet apart, or as required, to limit the horizontal flow of grout for each pour.

3.4.2.3 Horizontal Grout Barriers

Embed horizontal grout barriers in mortar below cells of hollow units receiving grout.

3.4.2.4 Grout Holes and Cleanouts

3.4.2.4.1 Grout Holes

Provide grouting holes in slabs, spandrel beams, and other in-place overhead construction. Locate holes over vertical reinforcing bars or as required to facilitate grout fill in bond beams. Provide additional openings spaced not more than 16 inches on centers where grouting of hollow unit masonry is indicated. Fom such openings not less than 4 inches in diameter or 3 by 4 inches in horizontal dimensions. Upon completion of grouting operations, plug and finish grouting holes to match surrounding surfaces.

3.4.2.4.2 Cleanouts for Hollow Unit Masonry Construction

For hollow masonry units. provide cleanout holes at the bottom of every grout pour in cores containing vertical reinforcement when the height of the grout pour exceeds 5 feet 4 inches. Where all cells are to be grouted, construct cleanout courses using bond beam units in an inverted position to permit cleaning of all cells. Provide cleanout holes at a

maximum spacing of 32 inches where all cells are to be filled with grout.

Establish a new series of cleanouts if grouting operations are stopped for more than 4 hours. Provide cleanouts not less than 3 by 3 inch by cutting openings in one face shell. Manufacturer's standard cutout units may be used at the Contractor's option. Do not cleanout holes until masonry work, reinforcement, and final cleaning of the grout spaces have been completed and inspected. For walls which will be exposed to view, close cleanout holes in an approved manner to match surrounding masonry.

3.4.2.5 Grout Placement

A grout pour is the total height of masonry to be grouted prior to erection of additional masonry. A grout lift is an increment of grout placement within a grout pour. A grout pour is filled by one or more lifts of grout.

a. Lay masonry to the top of a pour permitted by TMS MSJC Table 7, based on the size of the grout space and the type of grout. Prior to grouting, remove masonry protrusions that extend 1/2 inch or more into cells or spaces to be grouted. Provide grout holes and cleanouts in accordance with paragraph GROUT HOLES AND CLEANOUTS above when the grout pour height exceeds 5 feet 4 inches. Hold reinforcement, bolts, and embedded connections rigidly in position before grouting is started. Do not prewet concrete masonry units.

b. Place grout using a hand bucket, concrete hopper, or grout pump to fill the grout space without segregation of aggregate. Operate grout pumps to produce a continuous stream of grout without air pockets, segregation, or contamination.

c. If the masonry has cured at least 4 hours, grout slump is maintained between 10 to 11 inches, and no intermediate reinforced bond beams are placed between the top and bottom of the pour height, place conventional grout in lifts not exceeding 12 feet 8 inches. For the same curing and slump conditions but with intermediate bond beams, limit conventional grout lift to the bottom of the lowest bond beam that is more than 5 feet 4 inches above the bottom of the lift, but do not exceed 12 feet 8 inches. If masonry has not cured at least 4 hours or grout slump is not maintained between 10 to 11 inches, place conventional grout in lifts not exceeding 5 feet 4 inches.

d. Consolidate conventional grout lift and reconsolidate after initial settlement before placing next lift. For grout pours that are 12 inches or less in height, consolidate and reconsolidate grout by mechanical vibration or puddling. For grout pours that are greater than 12 inches in height, consolidate and reconsolidate grout by mechanical vibration. Apply vibrators at uniformly spaced points not further apart than the visible effectiveness of the machine. Limit duration of vibration to time necessary to produce satisfactory consolidation without causing segregation. If previous lift is not permitted to set, dip vibrator into previous lift. Do not insert vibrators into lower lifts that are in a semi-solidified state. If lower lift sets prior to placement of subsequent lift, form a grout key by terminating grout a minimum of 1-1/2 inch below a mortar joint. Vibrate each vertical cell containing reinforcement in partially grouted masonry. Do not form grout keys within beams.

e. If the masonry has cured 4 hours, place self-consolidating grout (SCG)

in lifts not exceeding the pour height. If masonry has not cured for at least 4 hours, place SCG in lifts not exceeding 5 feet 4 inches. Do not mechanically consolidate self-consolidating grout. Place self-consolidating grout in accordance with manufacturer's recommendations.

f. Upon completion of each day's grouting, remove waste materials and debris from the equipment, and dispose of outside the masonry.

3.4.3 Joint Reinforcement Installation

Install joint reinforcement at 16 inches on center unless otherwise indicated. Lap joint reinforcement not less than 6 inches. Install prefabricated sections at corners and wall intersections. Place the longitudinal wires of joint reinforcement in mortar beds to provide not less than 5/8 inch cover to either face of the unit.

3.4.4 Bond Beams

Reinforce and grout bond beams as indicated and as described in paragraphs above. Install grout barriers under bond beam units to retain the grout as required, unless wall is fully grouted or solid bottom units are used. For high lift grouting in partially grouted masonry, provide grout retaining material on the top of bond beams to prevent upward flow of grout. Ensure that reinforcement is continuous, including around corners, except through control joints or expansion joints, unless otherwise indicated.

3.4.5 Flashing and Weeps

Install through-wall flashing at obstructions in the cavity and where indicated on Drawings. Ensure continuity of the flashing at laps and inside and outside corners by splicing in a manner approved by the flashing manufacturer. Ensure that the top edge of the flashing is sealed by turning the flashing 1/2 inch into the mortar bed joint of backup masonry attaching a termination bar and applying compatible sealant at the top edge of the termination bar lapping a minimum of 6 inches under the weather resistive barrier securing the sheet metal flashing into a reglet cast into the concrete backup. Terminate the horizontal leg of the flashing by extending the sheet metal 1/2 inch beyond the outside face of masonry and turning downward with a hemmed drip terminating the fabric flashing 1/2 inch short of the outside face of masonry and adhering the flashing to a sheet metal drip edge extending the fabric flashing beyond the outside face of masonry and, when construction is complete, cutting the flashing flush with the face of masonry. Provide sealant below the drip edge of through-wall flashing.

Wherever through-wall flashing occurs, provide weep holes to drain flashing to exterior at acceptable locations as indicated. Provide weeps of open head jointsweep ventilators. Locate weeps not more than 24 inches on centers in mortar joints of the exterior wythe directly on the horizontal leg of through-wall flashing over foundations, bond beams, and any other horizontal interruptions of the cavity. Place weep holes perfectly horizontal or slightly canted downward to encourage water drainage outward and not inward. Other methods may be used for providing weeps when spacing is reduced to 16 inches on center and approved by the Contracting Officer. Maintain weeps free of mortar and other obstructions.

3.5 APPLICATION

3.5.1 Interface with Other Products

3.5.1.1 Built-In Items

Fill spaces around built-in items with mortar. Point openings around flush-mount electrical outlet boxes in wet locations with mortar. Embed anchors, ties, wall plugs, accessories, flashing, pipe sleeves and other items required to be built-in as the masonry work progresses. Fully embed anchors, ties and joint reinforcement in the mortar. Fill cells receiving anchor bolts and cells of the first course below bearing plates with grout, unless otherwise indicated.

3.5.1.2 Door and Window Frame Joints

On the exposed interior and exterior sides of exterior frames, rake joints between frames and abutting masonry walls to a depth of 3/8 inch.

3.5.1.3 Bearing Plates

Set bearing plates for beams, joists, joist girders and similar structural members to the proper line and elevation with damp-pack bedding mortar, except where non-shrink grout is indicated. Provide bedding mortar and non-shrink grout s specified in Section 03 30 00 CAST-IN-PLACE CONCRETE.

3.5.2 Tolerances

Lay masonry plumb, true to line, with courses level within the tolerances of TMS MSJC, Article 3.3 F.

3.6 FIELD QUALITY CONTROL

3.6.1 Tests

3.6.1.1 Field Testing of Mortar

Perform mortar testing at the following frequency: 3 times per day. For each required mortar test, provide a minimum of three mortar samples. Perform initial mortar testing prior to construction for comparison purposes during construction.

Prepare and test mortar samples for mortar aggregate ratio in accordance with ASTM C780 Appendix A4. Prepare and test mortar compressive strength specimens in accordance with ASTM C780 Appendix A6.

3.6.1.2 Field Testing of Grout

a. Perform grout testing at the following frequency: 3 times per day. For each required grout property to be evaluated, provide a minimum of three specimens.

b. Sample and test conventional and self-conslidating grout for compressive strength and temperature in accordance with ASTM C1019.

c. Evaluate slump in conventional grout in accordance with ASTM C1019.

d. Evaluate slump flow and visual stability index of self-consolidating grout in accordance with ASTM C1611/C1611M.

3.6.1.3 Clay Brick Efflorescence Test

Test clay brick that will be exposed to weathering for efflorescence in accordance with ASTM C67. Schedule tests far enough in advance of starting masonry work to permit retesting if necessary. Units meeting the definition of "effloresced" are subject to rejection.

3.6.1.4 Single-Wythe Masonry Wall Water Penetration Test

Prior to start of field construction of the single-wythe concrete masonry wall, perform masonry wall water penetration test on mock-up wall assemblies consisting of the identical design, materials, mix, and construction methods as the actual wall construction and in accordance with ASTM E514/E514M. Prepare a minimum of three specimens and cure for minimum 28 days prior to testing. Construct panels by the same methods, processes, and applications to be used on the project's construction site. Spray test for 6 hours on each specimen. If water is visible on back of test panels during the test and areas of dampness on the backside of the test panels do not exceed 25 percent of the wall area, the panels will be considered to have passed. Dampness is defined as any area of surface darkening or discoloration due to moisture penetration or accumulation below the observed surface.

Construct additional test panels for each failed test performed until three test panels pass the test. Factors that can affect test performance include materials, mixing, and quality of application and workmanship. Materials, mixing, and methods adjustments may be necessary in order to provide construction that passes the water penetration test. Document and record the test specimen construction materials and application and provide written test report in accordance with ASTM E514/E514M, supplemented by a detailed discussion of the specifics of test panel construction, application methods and processes used, quality of construction, and any variances or deviations that may have occurred between test panels during test panel construction. For failed test panels, identify in the supplemental report the variances, deficiencies or flaws that contributed to test panel failure and itemize the precautions to be taken in field construction of the masonry wall to prevent similar deficiencies and assure the wall construction replicates test panel conditions that pass the water penetration test. Submit the complete, certified test report, including supplemental report, to the Contracting Officer prior to start of single-wythe concrete masonry wall construction. Significant changes to materials, proportions, or construction techniques from those used in the passing water penetration test are grounds for performing new tests, at the discretion of the Contracting Officer.

3.6.2 Special Inspection

Perform special inspections and testing in accordance with Section 01 45 35 SPECIAL INSPECTIONS.

3.7 POINTING AND CLEANING

After mortar joints have attained their initial set, but prior to hardening, completely remove mortar and grout daubs and splashings from masonry-unit surfaces that will be exposed or painted. Before completion of the work, rake out defects in joints of masonry to be exposed or painted, fill with mortar, and tool to match existing joints. Immediately after grout work is completed, remove scum and stains that have percolated through the masonry work using a low pressure stream of water and a stiff

bristled brush. Do not clean masonry surfaces, other than removing excess surface mortar, until mortar in joints has hardened. Leave masonry surfaces clean, free of mortar daubs, dirt, stain, and discoloration, including scum from cleaning operations, and with tight mortar joints throughout. Do not use metal tools and metal brushes for cleaning.

3.7.1 Dry-Brushing Concrete Masonry

Dry brush exposed concrete masonry surfaces at the end of each day's work and after any required pointing, using stiff-fiber bristled brushes.

3.7.2 Clay Brick Surfaces

Clean exposed clay brick masonry surfaces to obtain surfaces free of stain, dirt, mortar and grout daubs, efflorescence, and discoloration or scum from cleaning operations. Perform cleaning in accordance with the approved cleaning procedure demonstrated on the mockup.

After cleaning, examine the sample panel of similar material for discoloration or stain as a result of cleaning. If the sample panel is discolored or stained, change the method of cleaning to ensure that the masonry surfaces in the structure will not be adversely affected. Water-soak exposed masonry surfaces and then clean with a proprietary masonry cleaning agent specifically recommended for the color and texture by the clay brick manufacturer and manufacturer of the cleaning product. Apply the solution with stiff fiber brushes, followed immediately by thorough rinsing with clean water. Use proprietary cleaning agents in conformance with the cleaning product manufacturer's printed recommendations. Remove efflorescence in conformance with the brick manufacturer's recommendations.

3.8 CLOSE-OUT TAKE-BACK PROGRAM

Collect information from manufacturer for take-back program options. Set aside masonry units, full and partial scrap packaging to be returned to manufacturer for recycling into new product. When such a service is not available, seek local recyclers to reclaim the materials. Submit documentation that includes contact information, summary of procedures, and the limitations and conditions applicable to the project. Indicate manufacturer's commitment to reclaim materials for recycling and/or reuse.

3.9 PROTECTION

Protect facing materials against staining. Cover top of walls with nonstaining waterproof covering or membrane to protect from moisture intrusion when work is not in progress. Continue covering the top of the unfinished walls until the wall is waterproofed with a complete roof or parapet system. Extend covering a minimum of 2 feet down on each side of the wall and hold securely in place. Before starting or resuming work, clean top surface of masonry in place of loose mortar and foreign material.

-- End of Section --

THIS PAGE HAS BEEN INTENTIONALLY LEFT BLANK

SECTION 05 40 00

COLD-FORMED METAL FRAMING
05/15

PART 1 GENERAL

1.1 REFERENCES

The publications listed below form a part of this specification to the extent referenced. The publications are referred to within the text by the basic designation only.

AMERICAN CONCRETE INSTITUTE (ACI)

ACI 318	(2014; Errata 1-2 2014; Errata 3-5 2015; Errata 6 2016; Errata 7-9 2017) Building Code Requirements for Structural Concrete (ACI 318-14) and Commentary (ACI 318R-14)

AMERICAN IRON AND STEEL INSTITUTE (AISI)

AISI S100	(2012) North American Specification for the Design of Cold-Formed Steel Structural Members
AISI S110	(2007; Suppl 1; Reaffirmed 2012) Standard for Seismic Design of Cold-Formed Steel Structural Systems - Special Bolted Moment Frames
AISI S200	(2007) North American Standard for Cold-Formed Steel Framing - General Provision
AISI S201	(2007) North American Standard for Cold-Formed Steel Framing - Product Data
AISI S202	(2011) Code of Standard Practice for Cold-formed Steel Structural Framing
AISI S211	(2007) North American Standard for Cold-Formed Steel Framing - Wall Stud Design
AISI S212	(2007) North American Standard for Cold-Formed Steel Framing - Header Design
AISI S213	(2007; Suppl 1 2009) North American Standard for Cold-Formed Steel Framing - Lateral Design
AISI S214	(2012) North American Standard for Cold-Formed Steel Framing – Truss Design

AMERICAN WELDING SOCIETY (AWS)

AWS D1.1/D1.1M	(2015; Errata 1 2015; Errata 2 2016)

	Structural Welding Code - Steel
AWS D1.3/D1.3M	(2008; Errata 2008) Structural Welding Code - Sheet Steel

ASTM INTERNATIONAL (ASTM)

ASTM A1003/A1003M	(2015) Standard Specification for Steel Sheet, Carbon, Metallic- and Nonmetallic-Coated for Cold-Formed Framing Members
ASTM A123/A123M	(2017) Standard Specification for Zinc (Hot-Dip Galvanized) Coatings on Iron and Steel Products
ASTM A153/A153M	(2016) Standard Specification for Zinc Coating (Hot-Dip) on Iron and Steel Hardware
ASTM A307	(2014; E 2017) Standard Specification for Carbon Steel Bolts, Studs, and Threaded Rod 60 000 PSI Tensile Strength
ASTM A370	(2016) Standard Test Methods and Definitions for Mechanical Testing of Steel Products
ASTM A653/A653M	(2015; E 2016) Standard Specification for Steel Sheet, Zinc-Coated (Galvanized) or Zinc-Iron Alloy-Coated (Galvannealed) by the Hot-Dip Process
ASTM C1007	(2011a) Standard Specification for Installation of Load Bearing (Transverse and Axial) Steel Studs and Related Accessories
ASTM C1513	(2013) Standard Specification for Steel Tapping Screws for Cold-Formed Steel Framing Connections
ASTM C955	(2015; E2015) Load-Bearing (Transverse and Axial) Steel Studs, Runners (Tracks), and Bracing or Bridging for Screw Application of Gypsum Panel Products and Metal Plaster Bases
ASTM E119	(2016a) Standard Test Methods for Fire Tests of Building Construction and Materials
ASTM E329	(2014a) Standard Specification for Agencies Engaged in the Testing and/or Inspection of Materials Used in Construction
ASTM E488/E488M	(2015) Standard Test Methods for Strength of Anchors in Concrete and Masonry Elements

ASTM F1554	(2015; E 2016) Standard Specification for Anchor Bolts, Steel, 36, 55, and 105-ksi Yield Strength
ASTM F1941	(2010) Standard Specification for Electrodeposited Coatings on Threaded Fasteners (Unified Inch Screw Threads (UN/UNR))
ASTM F2329	(2013) Zinc Coating, Hot-Dip, Requirements for Application to Carbon and Alloy Steel Bolts, Screws, Washers, Nuts, and Special Threaded Fasteners

INTERNATIONAL CODE COUNCIL (ICC)

ICC IBC	(2015) International Building Code

U.S. DEPARTMENT OF DEFENSE (DOD)

UFC 3-301-01	(2013; with Change 1) Structural Engineering

1.2 SUBMITTALS

Government approval is required for submittals with a "G" designation; submittals not having a "G" designation are for Contractor QC approval. Submittals with an "S" are for inclusion in the Sustainability Notebook, in conformance to Section 01 33 29, SUSTAINABITY REPORTING. Submit the following in accordance with Section 01 33 00 SUBMITTAL PROCEDURES:

SD-02 Shop Drawings

Framing Components; G

SD-03 Product Data

Steel Studs, Joists, Tracks, Bracing, Bridging and Accessories

SD-05 Design Data

Metal Framing Calculations; G

SD-07 Certificates

Load-Bearing Cold-Formed Metal Framing

Welds

SD-11 Closeout Submittals

1.3 DELIVERY, STORAGE, AND HANDLING

Steel framing and related accessories shall be stored and handled in accordance with the AISI S202, "Code of Standard Practice for Cold-Formed Steel Structural Framing".

1.4 LOAD-BEARING COLD-FORMED METAL FRAMING

Include top and bottom tracks, bracing, fastenings, and other accessories necessary for complete installation. Framing members shall have the structural properties indicated. Where physical structural properties are not indicated, they shall be as necessary to withstand all imposed loads. Design framing in accordance with AISI S100. Non-load-bearing metal framing, furring, and ceiling suspension systems are specified in Section 09 22 00 SUPPORTS FOR PLASTER AND GYPSUM BOARD.

Submit mill certificates or test reports from independent testing agency, qualified in accordance with ASTM E329, showing that the steel sheet used in the manufacture of each cold-formed component complies with the minimum yield strengths and uncoated steel thickness specified. Test reports shall be based on the results of three coupon tests in accordance with ASTM A370.

1.5 MAXIMUM DEFLECTION

Deflections of structural members shall not exceed the more restrictive of the limitations of ICC IBC and UFC 3-301-01.

1.6 QUALITY ASSURANCE

a. Engineering Responsibility: Preparation of Shop Drawings, design calculations, and other structural data by a registered professional engineer.

b. Testing Agency Qualifications: An independent testing agency, acceptable to authorities having jurisdiction, qualified according to ASTM E329 for testing indicated.

c. Product Tests: Mill certificates or data from a qualified independent testing agency, or in-house testing with calibrated test equipment indicating steel sheet complies with requirements, including base-metal thickness, yield strength, tensile strength, total elongation, chemical requirements, and metallic-coating thickness.

d. Welding Qualifications: Qualify procedures and personnel according to the following:

   (1) AWS D1.1/D1.1M, "Structural Welding Code - Steel".

   (2) AWS D1.3/D1.3M, "Structural Welding Code - Sheet Steel".

e. Fire-Test-Response Characteristics: Where indicated, provide cold-formed metal framing identical to that of assemblies tested for fire resistance per ASTM E119 by, and displaying a classification label from, a testing and inspecting agency acceptable to authorities having jurisdiction.

f. AISI Specifications and Standards: Comply with:

   (1) AISI S100, "North American Specification for the Design of Cold-Formed Steel Structural Members".

   (2) AISI S110, "Standard for Seismic Design of Cold-Formed Steel Structural Systems - Special Bolted Moment Frames".

(3) AISI S200, "North American Standard for Cold-Formed Steel Framing - General Provision".

(4) AISI S201, "North American Standard for Cold-Formed Steel Framing - Product Data".

(5) AISI S202, "Code of Standard Practice for Cold-Formed Steel Structural Framing".

(6) AISI S211, "North American Standard for Cold-Formed Steel Framing - Wall Stud Design".

(7) AISI S212, "North American Standard for Cold-Formed Steel Framing - Header Design".

(8) AISI S213, "North American Standard for Cold-Formed Steel Framing - Lateral Design".

(9) AISI S214, "North American Standard for Cold-Formed Steel Framing - Truss Design".

1.6.1 Drawing Requirements

Submit framing components to show sizes, thicknesses, layout, material designations, methods of installation, and accessories including the following:

a. Cross sections, plans, and/or elevations showing component types and locations for each framing application; including shop coatings and material thicknesses for each framing component.

b. Connection details showing fastener type, quantity, location, and other information to assure proper installation.

c. Drawings depicting panel configuration, dimensions, components, locations, and construction sequence if the Contractor elects to install prefabricated/prefinished frames.

Sign and seal fabrication drawings by a registered professional engineer.

1.6.2 Design Data Required

Submit metal framing calculations with design criteria and structural loading to verify sizes, thickness, and spacing of members and connections signed and sealed by a registered professional engineer. Show methods and practices used in installation.

PART 2 PRODUCTS

2.1 STEEL STUDS, JOISTS, TRACKS, BRACING, BRIDGING AND ACCESSORIES

Framing components shall comply with ASTM C955 and the following.

a. Steel Sheet: ASTM A1003/A1003M, Structural Grade, Type H, metallic coated, of grade and coating weight as follows:

(1) Grade: As required by structural performance.

(2) Coating: G60 (Z180), A60 (ZF180), AZ50 (AZ150), or GF30 (ZGF90).

b. Steel Studs: Manufacturer's standard C-shaped steel studs, of web depths indicated, punched, with stiffened flanges, and as follows:

(1) Minimum Base-Metal Thickness: as required.

(2) Flange Width: as required.

c. Steel Track: Manufacturer's standard U-shaped steel track, of web depths indicated, unpunched, with straight flanges, and as follows:

(1) Minimum Base-Metal Thickness: Matching steel studs.

(2) Flange Width: as required.

2.1.1 Studs and Joists of 54 mils (0.054 Inch) and Heavier

Galvanized steel, ASTM A653/A653M and ASTM A1003/A1003M, SS Grade 50, G60 .

2.1.2 Studs and Joists of 43 mils (0.043 Inch) and Lighter

Studs and Joists of 43 mils (0.043 Inch) and Lighter, Track, and Accessories (All thicknesses): Galvanized steel, ASTM A653/A653M and ASTM A1003/A1003M, SS, Grade 33 33,000 psi G60.

2.1.3 Sizes, Thickness, Section Modulus, and Other Structural Properties

Size and thickness as required.

2.2 MARKINGS

Studs and track shall have product markings stamped on the web of the section. The markings shall be repeated throughout the length of the member at a maximum spacing of 4 feet on center and shall be legible and easily read. The product marking shall include the following:

a. An ICC number.

b. Manufacturer's identification.

c. Minimum delivered uncoated steel thickness.

d. Protective coating designator.

e. Minimum yield strength.

2.3 CONNECTIONS

2.3.1 Steel-To-Concrete Connections

a. Anchor Rods: ASTM F1554, Grade 36; galvanized per ASTM A153/A153M.

b. Post-Installed Concrete Anchors: Adhesive or expansion anchors fabricated from corrosion-resistant materials with allowable load capacities in accordance with ICC-ES AC193 and ACI 318 greater than or equal to the design load as determined by testing per ASTM E488/E488M conducted by a qualified testing agency.

c. Power-Actuated Fasteners: Fabricated from corrosion-resistant materials with allowable load capacities in accordance with ICC-ES AC 70 greater than or equal to the design load as determined by testing per ASTM E1190 conducted by a qualified testing agency

2.3.2 Steel-To-Steel Connections

a. Screws: ASTM C1513, corrosion-resistant-coated, self-drilling, self-tapping steel screws of the type and size indicated. Provide low-profile head beneath sheathing and manufacturer's standard elsewhere. Electroplated to a minimum of 5 micron zinc coating per ASTM F1941 or hot-dipped galvanized per ASTM A123/A123M or ASTM A153/A153M.

b. Bolts: ASTM A307 coated by hot-dip process per ASTM F2329 or zinc-coated by mechanical-deposition process per ASTM B695, Class 55.

c. Welding Electrodes: Comply with AWS standards.

2.4 PLASTIC GROMMETS

Supply plastic grommets for stud webs as recommended by stud manufacturer, to protect electrical wires and plumbing piping. Prevent metal-to-metal contact between wiring/piping and studs.

2.5 SEALER GASKET

Closed-cell neoprene foam, 1/4-inch thick, selected from manufacturer's standard widths to match width of bottom track on concrete slab or foundation.

PART 3 EXECUTION

3.1 FASTENING

Fasten framing members together by welding or by using self-drilling, self-tapping screws. Electrodes and screw connections shall be as required and indicated in the design calculations.

3.1.1 Welds

All welding shall be performed in accordance with AWS D1.3/D1.3M, as modified by AISI S100. All welders, welding operations, and welding procedures shall be qualified according to AWS D1.3/D1.3M. Submit certified copies of welder qualifications test records showing

qualification in accordance with AWS D1.3/D1.3M. All welds shall be cleaned and coated with rust inhibitive galvanizing paint. Do not field weld materials lighter than 43 mils.

3.1.2 Screws

Screws shall be of the self-drilling self-tapping type, size, and location as required. Screw penetration through joined materials shall not be less than three exposed threads. Minimum spacings and edge distances for screws shall be as specified in AISI S100. Screws covered by sheathing materials shall have low profile heads.

3.1.3 Anchors

Anchors shall be of the type, size, and location as required.

3.1.4 Powder-Actuated Fasteners

Powder-actuated fasteners shall be of the type, size, and location as required.

3.2 INSTALLATION

Install cold-formed framing in accordance with ASTM C1007 and AISI S200.

Install cold-formed steel framing according to AISI S202 and to manufacturer's written instructions unless more stringent requirements are indicated.

3.2.1 Tracks

Provide accurately aligned runners at top and bottom of studs. Install sealer gasket under bottom of track on concrete slab or foundation. Anchor tracks as indicated in design calculations. Butt weld joints in tracks or splice with stud inserts. Fasteners shall be at least 3 inches from the edge of concrete slabs.

3.2.2 Studs

Cut studs square and set with firm bearing against webs of top and bottom tracks. Position studs vertically in tracks and space as indicated in design. Do not splice studs. Provide at least two studs at jambs of doors and other openings 2 feet wide or larger. Provide jack studs over openings, as necessary, to maintain indicated stud spacing. Provide tripled studs at corners, positioned to receive interior and exterior finishes. Fasten studs to top and bottom tracks by welding or screwing both flanges to the tracks. Framed wall openings shall include headers and supporting components as shown on the drawings. Headers shall be installed in all openings that are larger than the stud spacing in a wall. In curtain wall construction, provide for vertical movement where studs connect to the structural frame. Provide horizontal bracing in accordance with the design calculations and AISI S100. Bracing shall be not less than the following:

LOAD	HEIGHT	BRACING
Wind load only	Up to 10 feet	One row at mid-height
	Over 10 feet	Rows 5'-0" o.c. maximum
Axial load	Up to 10 feet	Two rows at 1/3 points
	Over 10 feet	Rows 3'-4" o.c. maximum

3.2.3 Joists and Trusses

a. Provide a stud directly under each joist or truss. The maximum spacing of studs as indicated shall be maintained.

b. Install, bridge, and brace cold-formed steel trusses according to AISI S200, AISI S214, AISI's "Code of Standard Practice for Cold-Formed Steel Structural Framing," and manufacturer's written instructions unless more stringent requirements are indicated.

c. Install temporary bracing and supports. Maintain braces and supports in place, undisturbed, until entire integrated supporting structure has been completed and permanent connections to framing are secured.

d. Do not alter, cut, or remove framing members or connections of trusses.

3.2.4 Erection Tolerances

a. Framing members which will be covered by finishes such as wallboard, plaster, or ceramic tile set in a mortar setting bed, shall be within the following limits:

(1) Layout of walls and partitions: 1/4 inch from intended position;

(2) Plates and runners: 1/4 inch in 8 feet from a straight line;

(3) Studs: 1/4 inch in 8 feet out of plumb, not cumulative; and

(4) Face of framing members: 1/4 inch in 8 feet from a true plane.

b. Framing members which will be covered by ceramic tile set in dry-set mortar, latex-portland cement mortar, or organic adhesive shall be within the following limits:

(1) Layout of walls and partitions: 1/4 inch from intended position;

(2) Plates and runners: 1/8 inch in 8 feet from a straight line;

(3) Studs: 1/8 inch in 8 feet out of plumb, not cumulative; and

(4) Face of framing members: 1/8 inch in 8 feet from a true plane.

-- End of Section --

SECTION 05 50 13

MISCELLANEOUS METAL FABRICATIONS
05/10

PART 1 GENERAL

1.1 REFERENCES

The publications listed below form a part of this specification to the extent referenced. The publications are referred to within the text by the basic designation only.

ALUMINUM ASSOCIATION (AA)

AA DAF45	(2003; Reaffirmed 2009) Designation System for Aluminum Finishes

AMERICAN INSTITUTE OF STEEL CONSTRUCTION (AISC)

AISC 303	(2016) Code of Standard Practice for Steel Buildings and Bridges

AMERICAN SOCIETY OF SAFETY ENGINEERS (ASSE/SAFE)

ASSE/SAFE A10.3	(2013) Operations - Safety Requirements for Powder Actuated Fastening Systems

AMERICAN WELDING SOCIETY (AWS)

AWS D1.1/D1.1M	(2015; Errata 1 2015; Errata 2 2016) Structural Welding Code - Steel

AMERICAN SOCIETY OF MECHANICAL ENGINEERS (ASME)

ASME B18.2.1	(2012; Errata 2013) Square and Hex Bolts and Screws (Inch Series)
ASME B18.2.2	(2015) Nuts for General Applications: Machine Screw Nuts, Hex, Square, Hex Flange, and Coupling Nuts (Inch Series)
ASME B18.21.1	(2009; R 2016) Washers: Helical Spring-Lock, Tooth Lock, and Plain Washers (Inch Series)
ASME B18.6.2	(1998; R 2010) Slotted Head Cap Screws, Square Head Set Screws, and Slotted Headless Set Screws: Inch Series
ASME B18.6.3	(2013; R 2017) Machine Screws, Tapping Screws, and Machine Drive Screws (Inch Series)

ASTM INTERNATIONAL (ASTM)

ASTM A123/A123M	(2017) Standard Specification for Zinc

	(Hot-Dip Galvanized) Coatings on Iron and Steel Products
ASTM A153/A153M	(2016) Standard Specification for Zinc Coating (Hot-Dip) on Iron and Steel Hardware
ASTM A283/A283M	(2013) Standard Specification for Low and Intermediate Tensile Strength Carbon Steel Plates
ASTM A307	(2014; E 2017) Standard Specification for Carbon Steel Bolts, Studs, and Threaded Rod 60 000 PSI Tensile Strength
ASTM A36/A36M	(2014) Standard Specification for Carbon Structural Steel
ASTM A467/A467M	(2007; R 2012) Standard Specification for Machine Coil Chain
ASTM A47/A47M	(1999; R 2018; E 2018) Standard Specification for Ferritic Malleable Iron Castings
ASTM A48/A48M	(2003; R 2012) Standard Specification for Gray Iron Castings
ASTM A500/A500M	(2013) Standard Specification for Cold-Formed Welded and Seamless Carbon Steel Structural Tubing in Rounds and Shapes
ASTM A53/A53M	(2018) Standard Specification for Pipe, Steel, Black and Hot-Dipped, Zinc-Coated, Welded and Seamless
ASTM A653/A653M	(2015; E 2016) Standard Specification for Steel Sheet, Zinc-Coated (Galvanized) or Zinc-Iron Alloy-Coated (Galvannealed) by the Hot-Dip Process
ASTM A780/A780M	(2009; R 2015) Standard Practice for Repair of Damaged and Uncoated Areas of Hot-Dip Galvanized Coatings
ASTM A786/A786M	(2015a) Standard Specification for Hot-Rolled Carbon, Low-Alloy, High-Strength Low-Alloy, and Alloy Steel Floor Plates
ASTM A924/A924M	(2016a) Standard Specification for General Requirements for Steel Sheet, Metallic-Coated by the Hot-Dip Process
ASTM B108/B108M	(2015) Standard Specification for Aluminum-Alloy Permanent Mold Castings
ASTM B209	(2014) Standard Specification for Aluminum

	and Aluminum-Alloy Sheet and Plate
ASTM B221	(2014) Standard Specification for Aluminum and Aluminum-Alloy Extruded Bars, Rods, Wire, Profiles, and Tubes
ASTM B26/B26M	(2014; E 2015) Standard Specification for Aluminum-Alloy Sand Castings
ASTM C1513	(2013) Standard Specification for Steel Tapping Screws for Cold-Formed Steel Framing Connections
ASTM D1187/D1187M	(1997; E 2011; R 2011) Asphalt-Base Emulsions for Use as Protective Coatings for Metal
ASTM D2047	(2011) Static Coefficient of Friction of Polish-Coated Floor Surfaces as Measured by the James Machine
ASTM E488/E488M	(2015) Standard Test Methods for Strength of Anchors in Concrete and Masonry Elements

MASTER PAINTERS INSTITUTE (MPI)

MPI 79	(Oct 2009) Alkyd Anti-Corrosive Metal Primer

NATIONAL ASSOCIATION OF ARCHITECTURAL METAL MANUFACTURERS (NAAMM)

NAAMM MBG 531	(2009) Metal Bar Grating Manual

SOCIETY FOR PROTECTIVE COATINGS (SSPC)

SSPC SP 3	(1982; E 2004) Power Tool Cleaning
SSPC SP 6/NACE No.3	(2007) Commercial Blast Cleaning

1.2 SUBMITTALS

Government approval is required for submittals with a "G" designation; submittals not having a "G" designation are for Contractor Quality Control approval. Submit the following in accordance with Section 01 33 00 SUBMITTAL PROCEDURES:

SD-02 Shop Drawings

Access Doors and Panels, Installation Drawings; G

Cover Plates and Frames, Installation Drawings; G

Expansion Joint Covers, Installation Drawings; G

Embedded Angles and Plates, Installation Drawings; G

Submit fabrication drawings showing layout(s), connections to structural system, and anchoring details as specified in AISC 303.

Submit templates, erection and installation drawings indicating thickness, type, grade, class of metal, and dimensions. Show construction details, reinforcement, anchorage, and installation with relation to the building construction.

SD-03 Product Data

Access Doors and Panels

Cover Plates and Frames

Expansion Joint Covers

1.3 QUALIFICATION OF WELDERS

Qualify welders in accordance with AWS D1.1/D1.1M. Use procedures, materials, and equipment of the type required for the work.

1.4 DELIVERY, STORAGE, AND PROTECTION

Protect from corrosion, deformation, and other types of damage. Store items in an enclosed area free from contact with soil and weather. Remove and replace damaged items with new items.

PART 2 PRODUCTS

2.1 MATERIALS

2.1.1 Structural Carbon Steel

ASTM A36/A36M.

2.1.2 Structural Tubing

ASTM A500/A500M.

2.1.3 Steel Pipe

ASTM A53/A53M, Type E or S, Grade B.

2.1.4 Fittings for Steel Pipe

Standard malleable iron fittings ASTM A47/A47M.

2.1.5 Gratings

a. Gray cast iron ASTM A48/A48M, Class 40.

b. Metal plank grating, non-slip requirement, aluminum ASTM B209, 6061-T6; steel ASTM A653/A653M, G90.

c. Metal bar type grating NAAMM MBG 531.

2.1.6 Floor Plates, Patterned

Floor plate ASTM A786/A786M. Steel plate shall not be less than 14 gage.

2.1.7 Anchor Bolts

ASTM A307. Where exposed, shall be of the same material, color, and finish as the metal to which applied.

2.1.7.1 Expansion Anchors, Sleeve Anchors, Adhesive Anchors,

Provide as indicated in Structural Drawings. Design values listed shall be as tested according to ASTM E488/E488M.

2.1.7.2 Lag Screws and Bolts

ASME B18.2.1, type and grade best suited for the purpose.

2.1.7.3 Toggle Bolts

ASME B18.2.1.

2.1.7.4 Bolts, Nuts, Studs and Rivets

ASME B18.2.2 or ASTM A307.

2.1.7.5 Powder Actuated Fasteners

Follow safety provisions of ASSE/SAFE A10.3.

2.1.7.6 Screws

ASME B18.2.1, ASME B18.6.2, ASME B18.6.3 and ASTM C1513.

2.1.7.7 Washers

Provide plain washers to conform to ASME B18.21.1. Provide beveled washers for American Standard beams and channels, square or rectangular, tapered in thickness, and smooth. Provide lock washers to conform to ASME B18.21.1.

2.1.8 Aluminum Alloy Products

Conform to ASTM B209 for sheet plate, ASTM B221 for extrusions and ASTM B26/B26M or ASTM B108/B108M for castings, as applicable. Provide aluminum extrusions at least 1/8 inch thick and aluminum plate or sheet at least 0.050 inch thick.

2.2 FABRICATION FINISHES

2.2.1 Galvanizing

Hot-dip galvanize items specified to be zinc-coated, after fabrication where practicable. Galvanizing: ASTM A123/A123M, ASTM A153/A153M, ASTM A653/A653M or ASTM A924/A924M, G90, as applicable.

2.2.2 Galvanize

Anchor bolts, grating fasteners, washers, and parts or devices necessary for proper installation, unless indicated otherwise.

2.2.3 Repair of Zinc-Coated Surfaces

Repair damaged surfaces with galvanizing repair method and paint conforming to ASTM A780/A780M or by application of stick or thick paste material specifically designed for repair of galvanizing, as approved by Contracting Officer. Clean areas to be repaired and remove slag from welds. Heat surfaces to which stick or paste material is applied, with a torch to a temperature sufficient to melt the metallics in stick or paste; spread molten material uniformly over surfaces to be coated and wipe off excess material.

2.2.4 Shop Cleaning and Painting

2.2.4.1 Surface Preparation

Blast clean surfaces in accordance with SSPC SP 6/NACE No.3. Surfaces that will be exposed in spaces above ceiling or in attic spaces, crawl spaces, furred spaces, and chases may be cleaned in accordance with SSPC SP 3 in lieu of being blast cleaned. Wash cleaned surfaces which become contaminated with rust, dirt, oil, grease, or other contaminants with solvents until thoroughly clean. Steel to be embedded in concrete shall be free of dirt and grease. Do not paint or galvanize bearing surfaces, including contact surfaces within slip critical joints, but coat with rust preventative applied in the shop.

2.2.4.2 Pretreatment, Priming and Painting

Apply pretreatment, primer, and paint in accordance with manufacturer's printed instructions.

2.2.5 Nonferrous Metal Surfaces

Protect by plating, anodic, or organic coatings.

2.2.6 Aluminum Surfaces

2.2.6.1 Surface Condition

Before finishes are applied, remove roll marks, scratches, rolled-in scratches, kinks, stains, pits, orange peel, die marks, structural streaks, and other defects which will affect uniform appearance of finished surfaces.

2.2.6.2 Aluminum Finishes

Unexposed sheet, plate and extrusions may have mill finish as fabricated. Sandblast castings' finish, medium, AA DAF45. Unless otherwise specified, provide all other aluminum items with a anodized finish. Provide a coating thickness not less than that specified for protective and decorative type finishes for items used in interior locations or architectural Class I type finish for items used in exterior locations in AA DAF45. Provide a polished satin finish on items to be anodized.

2.3 ACCESS DOORS AND PANELS

Provide flush type access doors and panels unless otherwise indicated. Fabricate frames for access doors of steel not lighter than 14 gage with welded joints and anchorage for securing into construction. Provide access doors with a minimum of 14 by 20 inches and of not lighter than 14 gage steel, with stiffened edges and welded attachments. Provide access doors hinged to frame and with a flush-face, turn-screw-operated latch.

Provide exposed metal surface finished as per Drawings; Finish Schedule. If no finish is indicated provide products with a shop applied primer.

2.4 CORNER GUARDS AND SHIELDS

For jambs and sills of openings and edges of platforms provide steel shapes and plates anchored in masonry or concrete with welded steel straps or end-weld stud anchors. Form corner guards for use with glazed or ceramic tile finish on walls with 0.0625 inch thick corrosion-resisting steel with polished or satin finish, extend 5 feet above the top of cove base or to the top of the wainscot, whichever is less, and securely anchor to the supporting wall.

2.5 COVER PLATES AND FRAMES

Fabricate cover plates of 1/4 inch thick rolled steel weighing not more than 100 pounds per plate with a selected raised pattern nonslip top surface or slip-resistant, carbon steel conforming to ASTM A283/A283M having a minimum static coefficient of friction of 0.50 when tested in accordance with ASTM D2047. On wearing surfaces provide aluminum oxide or silicon carbide.. Plate shall be galvanized . Reinforce to sustain a live load of 40 pounds per square foot. Frames shall be structural steel shapes and plates, with bent steel bars or headed anchors welded to frame for anchoring to concrete or securely fastened to the structure as indicated. Miter and weld all corners. Butt joint straight runs. Allow for expansion on straight runs over 15 feet. Provide holes for lifting tools. Provide holes and openings with 1/2 inch clearance for pipes and equipment. Remove sharp edges and burrs from cover plates and exposed edges of frames. Weld all connections and grind top surface smooth. Weld bar stops every six inches. Provide 1/8 inch clearance at edges and between cover plates.

2.6 EXPANSION JOINT COVERS

Provide expansion joint covers constructed of extruded aluminum with anodized satin aluminum finish for walls and ceilings and with standard mill finish for floor covers and exterior covers. Furnish plates, backup angles, expansion filler strip and anchors as indicated.

2.7 GUARD POSTS (BOLLARDS/PIPE GUARDS)

Provide 1.4 inchprime coatedstandard weight steel pipe as specified in ASTM A53/A53M. Anchor posts in concrete and fill solidly with concrete with minimum compressive strength of 2500 psi.

2.8 MISCELLANEOUS PLATES AND SHAPES

Provide for items that do not form a part of the structural steel framework, such as lintels, sill angles, miscellaneous mountings and frames. Provide lintels fabricated from structural steel shapes over openings in masonry walls and partitions as indicated and as required to support wall loads over openings. Provide with connections =. Construct to have at least 8 inches bearing on masonry at each end.

Provide angles and plates, ASTM A36/A36M, for embedment as indicated. Galvanize embedded items exposed to the elements according to ASTM A123/A123M.

2.9 SAFETY CHAINS

Construct safety chains of galvanized steel, straight link type, 3/16 inch diameter, with at least twelve links per foot, and with snap hooks on each end. Test safety chain in accordance with ASTM A467/A467M, Class CS. Provide snap hooks of boat type. Provide galvanized 3/8 inch bolt with 3/4 inch eye diameter for attachment of chain, anchored as indicated. Supply two chains, 4 inches longer than the anchorage spacing, for each guarded area. Locate safety chain where indicated.

2.10 DOWNSPOUT BOOTS

Provide cast iron downspout boots with receiving bells sized to fit downspouts.

PART 3 EXECUTION

3.1 GENERAL INSTALLATION REQUIREMENTS

Install items at locations indicated, according to manufacturer's instructions. Verify all measurements and take all field measurements necessary before fabrication. Exposed fastenings shall be compatible materials, shall generally match in color and finish, and harmonize with the material to which fastenings are applied. Include materials and parts necessary to complete each item, even though such work is not definitely shown or specified. Poor matching of holes for fasteners shall be cause for rejection. Conceal fastenings where practicable. Thickness of metal and details of assembly and supports shall provide strength and stiffness. Form joints exposed to the weather shall be formed to exclude water. Items listed below require additional procedures.

3.2 WORKMANSHIP

Provide miscellaneous metalwork that is well formed to shape and size, with sharp lines and angles and true curves. Drilling and punching shall produce clean true lines and surfaces. Provide continuous welding along the entire area of contact except where tack welding is permitted. Do not tack weld exposed connections of work in place and ground smooth. Provide a smooth finish on exposed surfaces of work in place and unless otherwise approved, flush exposed riveting. Mill joints where tight fits are required. Corner joints shall be coped or mitered, well formed, and in true alignment. Accurately set work to established lines and elevations and securely fastened in place. Install in accordance with manufacturer's installation instructions and approved drawings, cuts, and details.

3.3 ANCHORAGE, FASTENINGS, AND CONNECTIONS

Provide anchorage where necessary for fastening miscellaneous metal items securely in place. Include for anchorage not otherwise specified or indicated slotted inserts, expansion shields, and powder-driven fasteners, when approved for concrete; toggle bolts and through bolts for masonry; machine and carriage bolts for steel; through bolts, lag bolts, and screws for wood. Do not use wood plugs in any material. Provide non-ferrous attachments for non-ferrous metal. Make exposed fastenings of compatible materials, generally matching in color and finish, to which fastenings are applied. Conceal fastenings where practicable.

3.4 BUILT-IN WORK

Form for anchorage metal work built-in with concrete or masonry, or

provide with suitable anchoring devices as indicated or as required. Furnish metal work in ample time for securing in place as the work progresses.

3.5 WELDING

Perform welding, welding inspection, and corrective welding, in accordance with AWS D1.1/D1.1M. Use continuous welds on all exposed connections. Grind visible welds smooth in the finished installation.

3.6 FINISHES

3.6.1 Dissimilar Materials

Where dissimilar metals are in contact, protect surfaces with a coat conforming to MPI 79 to prevent galvanic or corrosive action. Where aluminum is in contact with concrete, plaster, mortar, masonry, wood, or absorptive materials subject to wetting, protect with ASTM D1187/D1187M, asphalt-base emulsion.

3.6.2 Field Preparation

Remove rust preventive coating just prior to field erection, using a remover approved by the rust preventive manufacturer. Surfaces, when assembled, shall be free of rust, grease, dirt and other foreign matter.

3.6.3 Environmental Conditions

Do not clean or paint surface when damp or exposed to foggy or rainy weather, when metallic surface temperature is less than 5 degrees F above the dew point of the surrounding air, or when surface temperature is below 45 degrees F or over 95 degrees F, unless approved by the Contracting Officer.

3.7 ACCESS PANELS

Install a removable access panel not less than 12 by 12 inches directly below each valve, flow indicator, damper, or air splitter that is located above the ceiling, other than an acoustical ceiling, and that would otherwise not be accessible.

3.8 COVER PLATES AND FRAMES

Install the tops of cover plates and frames flush with floor.

3.9 INSTALLATION OF GUARD POSTS (BOLLARDS/PIPE GUARDS)

Set pipe guards vertically in concrete piers. Construct piers of, and the hollow cores of the pipe filled with, concrete having a compressive strength of 3000 psi.

3.10 INSTALLATION OF DOWNSPOUT BOOTS

Secure downspouts to building through integral lips with appropriate fasteners.

3.11 MOUNTING OF SAFETY CHAINS

Mount safety chains 3 feet 6 inches and 2 feet above the floor.

3.12 STRUCTURAL STEEL DOOR FRAMES

Secure door frames to the floor slab by means of angle clips and expansion bolts. Weld continuous door stops to the frame or tap screwed with countersunk screws at no more than 18 inchcenters, assuring in either case full contact with the frame. Make any necessary reinforcements and drill and tap the frames as required for hardware.

-- End of Section --

SECTION 05 52 00

METAL RAILINGS
08/15

PART 1 GENERAL

1.1 REFERENCES

The publications listed below form a part of this specification to the extent referenced. The publications are referred to within the text by the basic designation only.

AMERICAN WELDING SOCIETY (AWS)

AWS D1.1/D1.1M	(2015; Errata 1 2015; Errata 2 2016) Structural Welding Code - Steel

AMERICAN SOCIETY OF MECHANICAL ENGINEERS (ASME)

ASME B18.2.1	(2012; Errata 2013) Square and Hex Bolts and Screws (Inch Series)
ASME B18.21.1	(2009; R 2016) Washers: Helical Spring-Lock, Tooth Lock, and Plain Washers (Inch Series)
ASME B18.6.1	(2016) Wood Screws (Inch Series)
ASME B18.6.3	(2013; R 2017) Machine Screws, Tapping Screws, and Machine Drive Screws (Inch Series)

ASTM INTERNATIONAL (ASTM)

ASTM A108	(2013) Standard Specification for Steel Bar, Carbon and Alloy, Cold-Finished
ASTM A153/A153M	(2016) Standard Specification for Zinc Coating (Hot-Dip) on Iron and Steel Hardware
ASTM A283/A283M	(2013) Standard Specification for Low and Intermediate Tensile Strength Carbon Steel Plates
ASTM A307	(2014; E 2017) Standard Specification for Carbon Steel Bolts, Studs, and Threaded Rod 60 000 PSI Tensile Strength
ASTM A36/A36M	(2014) Standard Specification for Carbon Structural Steel
ASTM A467/A467M	(2007; R 2012) Standard Specification for Machine Coil Chain
ASTM A500/A500M	(2013) Standard Specification for Cold-Formed Welded and Seamless Carbon

	Steel Structural Tubing in Rounds and Shapes
ASTM A512	(2006; R 2012) Standard Specification for Cold-Drawn Buttweld Carbon Steel Mechanical Tubing
ASTM A53/A53M	(2018) Standard Specification for Pipe, Steel, Black and Hot-Dipped, Zinc-Coated, Welded and Seamless
ASTM A575	(1996; E 2013; R 2013) Standard Specification for Steel Bars, Carbon, Merchant Quality, M-Grades

1.2 ADMINISTRATIVE REQUIREMENTS

1.2.1 Pre-Installation Meetings

Within 30 days of Contract Award, submit fabrication drawings to the Contracting Officer for the following items:

c. Steel Railings and Handrails

e. Anchorage and fastening systems

Submit manufacturer's catalog data, including two copies of manufacturers specifications, load tables, dimension diagrams, and anchor details for the following items:

i. Steel railings and handrails

k. Anchorage and fastening systems

1.3 SUBMITTALS

Government approval is required for submittals with a "G" designation; submittals not having a "G" designation are for Contractor Quality Control approval. Submit the following in accordance with Section 01 33 00 SUBMITTAL PROCEDURES:

SD-02 Shop Drawings

Fabrication Drawings; G

Iron and Steel Hardware; G

Steel Shapes, Plates, Bars and Strips; G

SD-03 Product Data

Structural Steel Plates, Shapes, and Bars; G

Cold-Finished Steel Bars; G

Hot-Rolled Carbon Steel Bars; G

Cold-Drawn Steel Tubing; G

Protective Coating; G

Steel Railings and Handrails; G

Anchorage and Fastening Systems; G

Installation Instructions; G1.4 QUALITY CONTROL

PART 2 PRODUCTS

2.1 FABRICATION

Pre-assemble items in the shop to the greatest extent possible. Disassemble units only to the extent necessary for shipping and handling. Clearly mark units for reassembly and coordinated installation.

For the fabrication of work exposed to view, use only materials that are smooth and free of surface blemishes, including pitting, seam marks, roller marks, rolled trade names, and roughness. Remove blemishes by grinding, or by welding and grinding, prior to cleaning, treating, and application of surface finishes, including zinc coatings.

Provide railings and handrails detail plans and elevations at not less than 1-inch to 1-foot. Provide details of sections and connections at not less than 3-inches to 1-foot. Also detail setting drawings, diagrams, templates for installation of anchorages, including concrete inserts, anchor bolts, and miscellaneous metal items having integral anchors.

Use materials of size and thicknesses indicated or, if not indicated, of required size and thickness to produce adequate strength and durability in finished product for intended use. Work materials to dimensions indicated on approved detail drawings, using proven details of fabrication and support. Use type of materials indicated or specified for the various components of work.

Form exposed work true to line and level with accurate angles and surfaces and straight sharp edges. Ensure all exposed edges are eased to a radius of approximately 1/32-inch. Bend metal corners to the smallest radius possible without causing grain separation or otherwise impairing the work.

Weld corners and seams continuously and in accordance with the recommendations of AWS D1.1/D1.1M. Grind exposed welds smooth and flush to match and blend with adjoining surfaces.

Form exposed connections with hairline joints that are flush and smooth, using concealed fasteners wherever possible. Use exposed fasteners of the type indicated or, if not indicated, use Phillips flathead (countersunk) screws or bolts.

Provide anchorage of the type indicated and coordinated with the supporting structure. Fabricate anchoring devices and space as indicated and as required to provide adequate support for the intended use of the work.

Use hot-rolled steel bars for work fabricated from bar stock unless work is indicated or specified to be fabricated from cold-finished or cold-rolled stock.

2.1.1 Steel Handrails

Fabricate joint posts, rail, and corners by one of the following methods:

a. Flush-type rail fittings of commercial standard, welded and ground smooth with railing splice locks secured with 3/8 inch hexagonal-recessed-head setscrews.

b. Mitered and welded joints made by fitting post to top rail and intermediate rail to post, mitering corners, groove welding joints, and grinding smooth. Butt railing splices and reinforce them by a tight fitting interior sleeve not less than 6 inches long.

c. Railings may be bent at corners in lieu of jointing, provided bends are made in suitable jigs and the pipe is not crushed.

2.1.2 Protective Coating

Shop prime and field paint the steelwork as indicated in accordance with Section 09 90 00 PAINTS AND COATINGS.

2.2 COMPONENTS

2.2.1 Structural Steel Plates, Shapes And Bars

Provide structural-size shapes and plates, except plates to be bent or cold-formed, conforming to ASTM A36/A36M, unless otherwise noted.

Provide steel plates, to be bent or cold-formed,conforming to ASTM A283/A283M, Grade C.

Provide steel bars and bar-size shapes conforming to ASTM A36/A36M, unless otherwise noted.

2.2.2 Hot-Rolled Carbon Steel Bars

Provide bars and bar-size shapes conforming to ASTM A575, grade as selected by the fabricator.

2.2.3 Cold-Finished Steel Bars

Provide cold-finished steel bars conforming to ASTM A108, grade as selected by the fabricator.

2.2.4 Cold-Drawn Steel Tubing

Provide tubing conforming to ASTM A512, sunk drawn, butt-welded, cold-finished, and stress-relieved.

2.2.5 Steel Pipe

Provide pipe conforming to ASTM A53/A53M, type as selected, Grade B; primed finish, unless galvanizing is required; standard weight (Schedule 40).

2.2.6 Fasteners

Provide galvanized zinc-coated fasteners in accordance with ASTM A153/A153M used for exterior applications or where built into exterior walls or floor systems. Select fasteners for the type, grade, and class required

for the installation of steel stair items.

Provide standard hexagon-head bolts, conforming to ASTM A307, Grade A.

Provide square-head lag bolts conforming to ASME B18.2.1.

Provide cadmium-plated steel machine screws conforming to ASME B18.6.3.

Provide flat-head carbon steel wood screws conforming to ASME B18.6.1.

Provide plain round, general-assembly-grade, carbon steel washers conforming to ASME B18.21.1.

Provide helical spring, carbon steel lockwashers conforming to ASME B18.2.1.

2.2.7 Steel Railings And Handrails

Design handrails to resist a concentrated load of 200 lbs in any direction at any point of the top of the rail Provide the same size rail and post. Provide pipe collars of the same material and finish as the handrail and posts.

2.2.7.1 Steel Handrails

Provide steel handrails, steel pipe conforming to ASTM A53/A53M or structural tubing conforming to ASTM A500/A500M, Grade A or B of equivalent strength. Provide steel railings of 1-1/2 -inches nominal size, shop painted.

Provide kickplates between railing posts where indicated, and consist ofo 1/8-inch steel flat bars not less than 6-inches high. Secure kickplates as indicated.

Provide galvanized railings, including pipe, fittings, brackets, fasteners, and other ferrous metal components.

2.2.8 Safety Chains

Provide safety chains of galvanized steel, straight link type, 3/16-inch diameter, with at least twelve links per foot, and with snap hooks on each end. Test safety chain in accordance with ASTM A467/A467M, Class CS. Provide snap hooks of boat type. Provide galvanized 3/8-inch bolt with 3/4-inch eye diameter for attachment of chain, anchored as indicated. Supply two chains, 4-inches longer than the anchorage spacing, for each guarded area.

PART 3 EXECUTION

3.1 PREPARATION

Adjust stair railings and handrails prior to securing in place to ensure proper matching at butting joints and correct alignment throughout their length. Space posts as indicated in drawings; adjust exact post spacing in fabrication drawings. Plumb posts in each direction. Secure posts and rail ends to building construction as follows:

a. Anchor posts to steel with steel flanges, angle type or floor type as required by conditions, welded to posts and bolted to the steel supporting members.

b Anchor rail ends to steel with steel oval or round flanges welded to tail ends and bolted to the structural steel members.

Secure handrails to walls by means of wall brackets and wall return fitting at handrail ends. Provide brackets of malleable iron castings, with not less than 3-inch projection from the finish wall surface to the center of the pipe drilled to receive one 3/8-inch bolt. Locate brackets not more than 60-inches on center. Provide wall return fittings of cast iron castings, flush-type, with the same projection as that specified for wall brackets. Secure wall brackets and wall return fittings to building construction as follows:

Install toe boards and brackets where indicated. Make splices, where required, at expansion joints. Install removable sections as indicated.

3.2 INSTALLATION

Submit manufacturer's installation instructions for the following products to be used in the fabrication of steelhand rail work:

a. Protective coating

b. Steel railings and handrails

c. Anchorage and fastening systems

Provide complete, detailed fabrication and installation drawings for all iron and steel hardware, and for all steel shapes, plates, bars and strips used in accordance with the design specifications referenced in this section.

3.2.1 Steel Handrail

Install by means of base plates bolted to structural steel or cold formed steel frame work. Secure rail ends by steel pipe flanges through-bolted to a back plate or by 1/4 inch lag bolts to metal or treated wood studs or solid backing.

3.2.2 Touchup Painting

Immediately after installation, clean field welds, bolted connections, abraded areas of the shop paint, and exposed areas painted with the paint used for shop painting. Apply paint by brush or spray to provide a minimum dry-film thickness of 2-mils.

3.3 FIELD QUALITY CONTROL

3.3.1 Field Welding

Ensure procedures of manual shielded metal arc welding, appearance and quality of welds made, and methods used in correcting welding work comply with AWS D1.1/D1.1M.

-- End of Section --

SECTION 06 10 00

ROUGH CARPENTRY
08/16

PART 1 GENERAL

1.1 REFERENCES

The publications listed below form a part of this specification to the extent referenced. The publications are referred to within the text by the basic designation only.

AMERICAN LUMBER STANDARDS COMMITTEE (ALSC)

ALSC PS 20	(2015) American Softwood Lumber Standard

AMERICAN WOOD COUNCIL (AWC)

AWC NDS	(2012) National Design Specification (NDS) for Wood Construction
AWC WFCM	(2012) Wood Frame Construction Manual for One- and Two-Family Dwellings

AMERICAN WOOD PROTECTION ASSOCIATION (AWPA)

AWPA BOOK	(2015) AWPA Book of Standards
AWPA M2	(2016) Standard for the Inspection of Preservative Treated Wood Products for Industrial Use
AWPA M6	(2013) Brands Used on Preservative Treated Materials
AWPA P18	(2014) Nonpressure Preservatives
AWPA P49	(2015) Standard for Fire Retardant FR-1
AWPA P5	(2015) Standard for Waterborne Preservatives
AWPA T1	(2016) Use Category System: Processing and Treatment Standard
AWPA U1	(2016) Use Category System: User Specification for Treated Wood

APA - THE ENGINEERED WOOD ASSOCIATION (APA)

APA L870	(2010) Voluntary Product Standard, PS 1-09, Structural Plywood

ASTM INTERNATIONAL (ASTM)

ASTM D2898	(2010) Accelerated Weathering of Fire-Retardant-Treated Wood for Fire

Testing

FM GLOBAL (FM)

FM 4435 (2013) Roof Perimeter Flashing

NATIONAL HARDWOOD LUMBER ASSOCIATION (NHLA)

NHLA Rules (2011) Rules for the Measurement & Inspection of Hardwood & Cypress

NORTHEASTERN LUMBER MANUFACTURERS ASSOCIATION (NELMA)

NELMA Grading Rules (2013) Standard Grading Rules for Northeastern Lumber

REDWOOD INSPECTION SERVICE (RIS) OF THE CALIFORNIA REDWOOD ASSOCIATION (CRA)

RIS Grade Use (1998) Redwood Lumber Grades and Uses

SOUTHERN CYPRESS MANUFACTURERS ASSOCIATION (SCMA)

SCMA Spec (1986; Supple. No. 1, Aug 1993) Standard Specifications for Grades of Southern Cypress

SOUTHERN PINE INSPECTION BUREAU (SPIB)

SPIB 1003 (2002) Standard Grading Rules for Southern Pine Lumber

WEST COAST LUMBER INSPECTION BUREAU (WCLIB)

WCLIB 17 (2004) Standard Grading Rules

WESTERN WOOD PRODUCTS ASSOCIATION (WWPA)

WWPA G-5 (2011) Western Lumber Grading Rules

1.2 SUBMITTALS

Government approval is required for submittals with a "G" designation; submittals not having a "G" designation are for Contractor Quality Control approval. Submit the following in accordance with Section 01 33 00 SUBMITTAL PROCEDURES:

Nailers and nailing strips; G

Drawings of field erection details, including materials and methods of fastening nailers in conformance with Factory Mutual wind uplift rated systems specified in other Sections of these specifications.

SD-03 Product Data

Fire-retardant Treatment

SD-06 Test Reports

Preservative-treated Lumber and Plywood

Preservative Treatment

Indoor Air Quality

SD-10 Operation and Maintenance Data
When not labeled, identify types in Operation and Maintenance Manual.
Take-back Program

Include contact information, summary of procedures, and the limitations and conditions applicable to the project. Indicate manufacturer's commitment to reclaim materials for recycling or reuse.

1.3 DELIVERY AND STORAGE

Deliver materials to the site in an undamaged condition. Store, protect, handle, and install prefabricated structural elements in accordance with manufacturer's instructions and as specified. Store materials off the ground to provide proper ventilation, with drainage to avoid standing water, and protection against ground moisture and dampness. Store materials with a moisture barrier at both the ground level and as a cover forming a well ventilated enclosure. Store wood I-beams and glue-laminated beams and joists on edge. Adhere to requirements for stacking, lifting, bracing, cutting, notching, and special fastening requirements. Do not use materials that have visible moisture or biological growth. Remove defective and damaged materials and provide new materials. Store separated reusable wood waste convenient to cutting station and area of work.

1.4 GRADING AND MARKING

1.4.1 Lumber

Mark each piece of framing and board lumber or each bundle of small pieces of lumber with the grade mark of a recognized association or independent inspection agency. Such association or agency must be certified by the Board of Review, American Lumber Standards Committee, to grade the species used. Surfaces that are to be exposed to view must not bear grademarks, stamps, or any type of identifying mark. Hammer marking will be permitted on timbers when all surfaces will be exposed to view.

1.4.2 Plywood

Mark each sheet with the mark of a recognized association or independent inspection agency that maintains continuing control over the quality of the plywood. The mark must identify the plywood by species group or span rating, exposure durability classification, grade, and compliance with APA L870. Surfaces that are to be exposed to view must not bear grademarks or other types of identifying marks.

1.4.3 Preservative-Treated Lumber and Plywood

The Contractor is responsible for the quality of treated wood products. Each treated piece must be inspected in accordance with AWPA M2 and permanently marked or branded, by the producer, in accordance with AWPA M6.

The Contractor must provide Contracting Officer's Representative (COR) with the inspection report of an approved independent inspection agency that offered products comply with applicable AWPA Standards. The appropriate Quality Mark on each piece will be accepted, in lieu of inspection reports, as evidence of compliance with applicable AWPA treatment standards.

1.4.4 Fire-Retardant Treated Lumber

Mark each piece in accordance with AWPA M6, except pieces that are to be natural or transparent finished. In addition, exterior fire-retardant lumber must be distinguished by a permanent penetrating blue stain. Labels of a nationally recognized independent testing agency will be accepted as evidence of conformance to the fire-retardant requirements of AWPA M6.

1.5 SIZES AND SURFACING

ALSC PS 20 for dressed sizes of yard and structural lumber. Lumber must be surfaced four sides. Size references, unless otherwise specified, are nominal sizes, and actual sizes must be within manufacturing tolerances allowed by the standard under which the product is produced. Other measurements are IP or SI standard.

1.6 MOISTURE CONTENT

Air-dry or kiln-dry lumber. Kiln-dry treated lumber after treatment. Maximum moisture content of wood products must be as follows at the time of delivery to the job site:

a. Framing lumber and board, 19 percent maximum

b. Materials other than lumber; moisture content must be in accordance with standard under which the product is produced

1.7 PRESERVATIVE TREATMENT

Treat wood products with waterborne wood preservatives conforming to AWPA P5. Pressure treatment of wood products must conform to the requirements of AWPA BOOK Use Category System Standards U1 and T1. Pressure-treated wood products must not contain arsenic, chromium, or other agents classified as carcinogenic, probably carcinogenic, or possibly carcinogenic to humans (compounds in Groups 1, 2A, or 2B) by the International Agency for Research on Cancer (IARC), Lyon, France. Pressure-treated wood products must not exceed the limits of the U.S. EPA's Toxic Characteristic Leaching Procedure (TCLP), and must not be classified as hazardous waste. Submit certification from treating plant stating chemicals and process used and net amount of preservatives retained are in conformance with specified standards. In accordance with AWPA U1 provide non-copper preservative treatment such as EL2, PTI or SBX,DOT for products in direct contact with sheet metal.

a. 0.40 pcf intended for ground contact and fresh water use. 0.60 pcf intended for Ammoniacal Copper Quaternary Compound (ACQ)-treated foundations. 0.80 to 1.00 pcf intended for ACQ-treated pilings. All wood must be air or kiln dried after treatment. Specific treatments must be verified by the report of an approved independent inspection agency, or the AWPA Quality Mark on each piece. Do not incise surfaces of lumber that will be exposed. Minimize cutting and avoid

breathing sawdust. Brush coat areas that are cut or drilled after treatment with either the same preservative used in the treatment or with a 2 percent copper naphthenate solution. All lumber and woodwork must be preservative treated. The following items must be preservative treated:

(1) Wood sills, soles, plates, furring, and sleepers that are less than 24 inches from the ground, furring and nailers that are set into or in contact with concrete or masonry.

(2) Nailers, edge strips, crickets, curbs, and cants for roof decks.

1.7.1 New Construction

Use a boron-based preservative conforming to AWPA P18, sodium silicate wood mineralization process, or Ammoniacal Copper Quaternary Compound to treat wood. Use boron-based preservatives for above-ground applications only.

1.8 FIRE-RETARDANT TREATMENT

Fire-retardant treated wood must be pressure treated with fire retardants conforming to AWPA P49. Fire retardant treatment of wood products must conform to the requirements of AWPA U1, Commodity Specification H and AWPA T1, Section H. Treatment and performance inspection must be by an independent and qualified testing agency that establishes performance ratings. Each piece or bundle of treated material must bear identification of the testing agency to indicate performance in accordance with such rating. Treated materials to be exposed to rain wetting must be subjected to an accelerated weathering technique in accordance with ASTM D2898 prior to being tested. Such items which will not be inside a building, and such items which will be exposed to heat or high humidity, must receive exterior fire-retardant treatment. Items to be treated include the following:

a. wall mounted telephone circuit board

1.9 QUALITY ASSURANCE

PART 2 PRODUCTS

2.1 MATERIALS

2.2 LUMBER

2.2.1 Virgin Lumber

Lumber milled from old growth timber is not permitted. Avoid companies that buy, sell or use old growth timber in their operations.

2.2.2 Framing Lumber

Framing lumber such as studs, plates, caps, collar beams, cant strips, bucks, sleepers, nailing strips, and nailers and board lumber such as subflooring and wall and roof sheathing must be one of the species listed in the table below. Minimum grade of species must be as listed.

Table of Grades for Framing and Board Lumber			
Grading Rules	Species	Framing	Board Lumber
WWPA G-5 standard grading rules	Aspen, Douglas Fir-Larch, Douglas Fir South, Engelmann Spruce-Lodgepole Pine, Engelmann Spruce, Hem-Fir, Idaho White Pine, Lodgepole Pine, Mountain Hemlock, Mountain Hemlock-Hem-Fir, Ponderosa Pine-Sugar Pine, Ponderosa Pine-Lodgepole Pine, Subalpine Fir, White Woods, Western Woods, Western Cedars, Western Hemlock	All Species: Standard Light Framing or No. 3 Structural Light Framing (Stud Grade for 2x4 nominal size, 10 feet and shorter)	All Species: No. 3 Common
WCLIB 17 standard grading rules	Douglas Fir-Larch, Hem-Fir, Mountain Hemlock, Sitka Spruce, Western Cedars, Western Hemlock	All Species: Standard Light Framing or No. 3 Structural Light Framing (Stud Grade for 2x4 nominal size, 10 feet and shorter)	All Species: Standard

Table of Grades for Framing and Board Lumber			
Grading Rules	Species	Framing	Board Lumber
SPIB 1003 standard grading rules	Southern Pine	All Species: Standard Light Framing or No. 3 Structural Light Framing (Stud Grade for 2x4 nominal size, 10 feet and shorter)	No. 2 Boards
SCMA Spec standard specifications	Cypress	No. 2 Common	No. 2 Common
NELMA Grading Rules standard grading rules	Balsam Fir, Eastern Hemlock-Tamarack, Eastern Spruce, Eastern White Pine, Northern Pine, Northern Pine-Cedar	All Species: Standard Light Framing or No. 3 Structural Light Framing (Stud Grade for 2x4 nominal size, 10 feet and shorter)	All Species: No. 3 Common except Standard for Eastern White and Northern Pine
RIS Grade Use standard specifications	Redwood	All Species: Standard Light Framing or No. 3 Structural Light Framing (Stud Grade for 2x4 nominal size, 10 feet and shorter)	Construction Heart

Table of Grades for Framing and Board Lumber			
Grading Rules	Species	Framing	Board Lumber
NHLA Rules rules for the measurement and inspection of hardwood and cypress lumber	Cypress	No. 2 Dimension	No. 2 Common

2.3 PLYWOOD

2.3.1 Plywood

2.3.1.1 Plywood Telephone Circuit Board

B-D Grade, or better, Exposure 2, Span rating of 24/16, fire treated.

PART 3 EXECUTION

3.1 INSTALLATION

Do not install building construction materials that show visual evidence of biological growth.

Conform to AWC WFCM and install in accordance with the National Association of Home Builders (NAHB) Advanced Framing Techniques: Optimum Value Engineering, unless otherwise indicated or specified. Select lumber sizes to minimize waste. Fit framing lumber and other rough carpentry, set accurately to the required lines and levels, and secure in place in a rigid manner.

3.2 MISCELLANEOUS

3.2.1 Wood Roof Nailers, Edge Strips, Crickets, Curbs, and Cants

Provide sizes and configurations indicated or specified and anchored securely to continuous construction.

3.2.1.1 Roof Nailing Strips

Provide roof nailing strips for roof decks as specified herein by metal building fabricator. Apply nailing strips in straight parallel rows in the direction and spacing specified.

a. Surface-Applied Nailers: Must be 3 inches wide and of thickness to finish flush with the top of the insulation. Anchor strips securely to the roof deck with powder actuated fastening devices or expansion shields and bolts, spaced not more than 24 inches o.c. On decks with slopes of one inch or more, provide surface applied wood nailers for securing insulation.

3.2.1.2 Roof Edge Strips and Nailers

Provide at perimeter of roof, around openings through roof, and where roofs abut walls, curbs, and other vertical surfaces. Except where indicated otherwise, nailers must be 6 inches wide and the same thickness as the insulation. Anchor nailers securely to underlying construction. Anchor perimeter nailers in accordance with FM 4435.

3.2.2 Wood Blocking

Provide proper sizes and shapes at proper locations for the installation and attachment of wood and other finish materials, fixtures, equipment, and items indicated or specified.

3.2.3 Temporary Closures

Provide with hinged doors and padlocks and install during construction at exterior doorways and other ground level openings that are not otherwise closed. Cover windows and other unprotected openings with polyethylene or other approved material, stretched on wood frames. Provide dustproof barrier partitions to isolate areas as directed.

3.3 INSTALLATION OF TIMBER CONNECTORS

Install timber connectors in conformance with requirements of AWC NDS.

3.4 ERECTION TOLERANCES

a. Framing members which will be covered by finishes such as wallboard, plaster, or ceramic tile set in a mortar setting bed, must be within the following limits:

   (1) Layout of walls and partitions: 1/4 inch from intended position;

   (2) Plates and runners: 1/4 inch in 8 feet from a straight line;

   (3) Studs: 1/4 inch in 8 feet out of plumb, not cumulative; and

   (4) Face of framing members: 1/4 inch in 8 feet from a true plane.

b. Framing members which will be covered by ceramic tile set in dry-set mortar, latex-portland cement mortar, or organic adhesive must be within the following limits:

   (1) Layout of walls and partitions: 1/4 inch from intended position;

   (2) Plates and runners: 1/8 inch in 8 feet from a straight line;

   (3) Studs: 1/8 inch in 8 feet out of plumb, not cumulative; and

   (4) Face of framing members: 1/8 in 8 feet from a true plane.

3.5 SPECIAL INSPECTION AND TESTING FOR SEISMIC-RESISTING SYSTEMS

Special inspections and testing for seismic-resisting systems and components must be done in accordance with Section 01 45 35 SPECIAL INSPECTIONS.

3.6 WASTE MANAGEMENT OF WOOD PRODUCTS

In accordance with the Waste Management Plan and as specified. Separate

and reuse scrap sheet materials larger than 2 square feet, framing members larger than 16 inches, and multiple offcuts of any size larger than 12 inches. Clearly separate damaged wood and other scrap lumber for acceptable alternative uses on site, including bracing, blocking, cripples, ties, and shims.

Coordinate with manufacturer for take-back program and submit manufacturer's policy statement on program.

Separate treated, stained, painted, and contaminated wood and place in designated area for hazardous materials. Dispose of according to local regulations. Prevent sawdust and wood shavings from entering the storm drainage system. Do not burn scrap lumber that has been pressure treated, or lumber that is less than one year old.

3.7 SCHEDULE

Some metric measurements in this section are based on mathematical conversion of inch-pound measurements. Typical conversion is as shown:

-- End of Section --

SECTION 06 61 16

SOLID SURFACING FABRICATIONS
08/10

PART 1 GENERAL

1.1 REFERENCES

The publications listed below form a part of this specification to the extent referenced. The publications are referred to within the text by the basic designation only.

ASTM INTERNATIONAL (ASTM)

ASTM D2583	(2013a) Indentation Hardness of Rigid Plastics by Means of a Barcol Impressor
ASTM D570	(1998; E 2010; R 2010) Standard Test Method for Water Absorption of Plastics
ASTM D638	(2014) Standard Test Method for Tensile Properties of Plastics
ASTM D696	(2016) Standard Test Method for Coefficient of Linear Thermal Expansion of Plastics Between -30 degrees C and 30 degrees C With a Vitreous Silica Dilatometer
ASTM E84	(2015b) Standard Test Method for Surface Burning Characteristics of Building Materials
ASTM G21	(2015) Determining Resistance of Synthetic Polymeric Materials to Fungi

CSA GROUP (CSA)

CSA B45.5-11/IAPMO Z124	(2011; Update 1 2012) Plastic Plumbing Fixtures - First Edition

NATIONAL ELECTRICAL MANUFACTURERS ASSOCIATION (NEMA)

ANSI/NEMA LD 3	(2005) Standard for High-Pressure Decorative Laminates

NSF INTERNATIONAL (NSF)

NSF/ANSI 51	(2012) Food Equipment Materials

TILE COUNCIL OF NORTH AMERICA (TCNA)

TCNA Hdbk	(2013) Handbook for Ceramic, Glass, and Stone Tile Installation

1.2 SYSTEM DESCRIPTION

a. Work under this section includes window sills and other items utilizing solid polymer (solid surfacing) fabrication as shown on the drawings and as described in this specification. Do not change source of supply for materials after work has started, if the appearance of finished work would be affected.

b. In most instances, installation of solid polymer fabricated components and assemblies will require strong, correctly located structural support provided by other trades. To provide a stable, sound, secure installation, close coordination is required between the solid polymer fabricator/installer and other trades to ensure that necessary structural wall support, cabinet counter top structural support, proper clearances, and other supporting components are provided for the installation of wall panels, countertops, shelving, and all other solid polymer fabrications to the degree and extent recommended by the solid polymer manufacturer.

c. Appropriate staging areas for solid polymer fabrications. Allow variation in component size and location of openings of plus or minus 1/8 inch.

1.3 SUSTAINABILITY REPORTING

Materials in this technical specification may contribute towards contract compliance with sustainability requirements. See Section 01 33 29 SUSTAINABILITY REPORTING for project requirements.

1.4 SUBMITTALS

Government approval is required for submittals with a "G" designation; submittals not having a "G" designation are for Contractor Quality Control approval. Submittals with an "S" are for inclusion in the Sustainability Notebook, in conformance to Section 01 33 29 SUSTAINABILITY REPORTING. Submit the following in accordance with Section 01 33 00 SUBMITTAL PROCEDURES:

SD-02 Shop Drawings

Installation; G, ID

SD-03 Product Data

Solid Polymer Material
Qualifications
Fabrications

SD-04 Samples

Material; G, ID
; G

SD-06 Test Reports

Solid Polymer Material

SD-07 Certificates

Fabrications
Qualifications

SD-10 Operation and Maintenance Data

Clean-up

SD-11 Closeout Submittals

1.5 QUALITY ASSURANCE

1.5.1 Qualifications

To ensure warranty coverage, solid polymer fabricators shall be certified to fabricate by the solid polymer material manufacturer being utilized. Mark all fabrications with the fabricator's certification label affixed in an inconspicuous location. Fabricators shall have a minimum of 5 years of experience working with solid polymer materials. Submit solid polymer manufacturer's certification attesting to fabricator qualification approval.

1.6 DELIVERY, STORAGE, AND HANDLING

Do not deliver materials to project site until areas are ready for installation. Deliver components and materials to the site undamaged, in containers clearly marked and labeled with manufacturer's name. Materials shall be stored indoors and adequate precautions taken to prevent damage to finished surfaces. Provide protective coverings to prevent physical damage or staining following installation, for duration of project.

1.7 WARRANTY

Provide manufacturer's warranty of ten years against defects in materials, excluding damages caused by physical or chemical abuse or excessive heat. Warranty shall provide for material and labor for replacement or repair of defective material for a period of ten years after component installation.

PART 2 PRODUCTS

2.1 MATERIAL

Provide solid polymer material that is a homogeneous filled solid polymer; not coated, laminated or of a composite construction; meeting CSA B45.5-11/IAPMO Z124 requirements. Material shall have minimum physical and performance properties specified. Superficial damage to a depth of 0.01 inch shall be repairable by sanding or polishing. Material thickness shall be as indicated on the drawings. In no case shall material be less than 1/4 inch in thickness. Submit a minimum 4 by 4 inch sample of each color and pattern for approval. Samples shall indicate full range of color and pattern variation. Approved samples shall be retained as a standard for this work. Submit test report results from an independent testing laboratory attesting that the submitted solid polymer material meets or exceeds each of the specified performance requirements.

2.1.1 Cast, 100 Percent Acrylic Polymer Solid Surfacing Material

Cast, 100 percent acrylic solid polymer material shall be composed of acrylic polymer, mineral fillers, and pigments and shall meet the following minimum performance requirements:

PROPERTY	REQUIREMENT (min. or max.)	TEST PROCEDURE
Tensile Strength	4000 psi (max.)	ASTM D638
Hardness	55-Barcol Impressor (min.)	ASTM D2583
Thermal Expansion	.000023 in/in/F (max.)	ASTM D696
Boiling Water Surface Resistance	No Change	ANSI/NEMA LD 3-3.05
High Temperature Resistance	No Change	ANSI/NEMA LD 3-3.06
Impact Resistance (Ball drop)		ANSI/NEMA LD 3-303
1/4 inch sheet	36 inches, 1/2 lb ball, no failure	
1/2 inch sheet	140 inches, 1/2 lb ball, no failure	
3/4 inch sheet	200 inches, 1/2 lb ball, no failure	
Mold & Mildew Growth	No growth	ASTM G21
Bacteria Growth	No growth	ASTM G21
Liquid Absorption (Weight in 24 hrs.)	0.1 percent max.	ASTM D570
Flammability		ASTM E84
Flame Spread	25 max.	
Smoke Developed	30 max.	
Sanitation	"Food Contact" approval	NSF/ANSI 51

2.1.2 Acrylic-modified Polymer Solid Surfacing Material

Cast, solid polymer material shall be composed of a formulation containing acrylic and polyester polymers, mineral fillers, and pigments. Acrylic polymer content shall be not less than 5 percent and not more than 10 percent in order to meet the following minimum performance requirements:

PROPERTY	REQUIREMENT (min. or max.)	TEST PROCEDURE
Tensile Strength	4100 psi (max.)	ASTM D638
Hardness	50-Barcol Impressor (min.)	ASTM D2583
Thermal Expansion	.000023 in/in/F (max.)	ASTM D696
Boiling Water Surface Resistance	No Change	ANSI/NEMA LD 3-3.05
High Temperature Resistance	No Change	ANSI/NEMA LD 3-3.06
Impact Resistance (Ball drop)		ANSI/NEMA LD 3-303
1/4 inch sheet	36 inches, 1/2 lb ball, no failure	
1/2 inch sheet	140 inches, 1/2 lb ball, no failure	
3/4 inch sheet	200 inches, 1/2 lb ball, no failure	
Mold & Mildew Growth	No growth	ASTM G21
Bacteria Growth	No growth	ASTM G21
Liquid Absorption (Weight in 24 hrs.)	0.6 percent max.	ASTM D570
Flammability		ASTM E84
Flame Spread	25 max.	
Smoke Developed	100 max.	
Sanitation	"Food Contact" approval	NSF/ANSI 51

2.1.3 Material Patterns and Colors

Patterns and colors for all solid polymer components and fabrications shall be those indicated on the project drawings color schedule. Pattern and color shall occur, and shall be consistent in appearance, throughout the entire depth (thickness) of the solid polymer material.

2.1.4 Surface Finish

Exposed finished surfaces and edges shall receive a uniform appearance. Exposed surface finish shall be semigloss; gloss rating of 25-50 .

2.2 ACCESSORY PRODUCTS

Accessory products, as specified below, shall be manufactured by the solid polymer manufacturer or shall be products approved by the solid polymer manufacturer for use with the solid polymer materials being specified.

2.2.1 Seam Adhesive

Seam adhesive shall be a two-part adhesive kit to create permanent, inconspicuous, non-porous, hard seams and joints by chemical bond between solid polymer materials and components to create a monolithic appearance of the fabrication. Adhesive shall be approved by the solid polymer manufacturer. Adhesive shall be color-matched to the surfaces being bonded where solid-colored, solid polymer materials are being bonded together. The seam adhesive shall be clear or color matched where particulate patterned, solid polymer materials are being bonded together.

2.2.2 Panel Adhesive

Panel adhesive shall be neoprene based panel adhesive meeting TCNA Hdbk, Underwriter's Laboratories (UL) listed. Use this adhesive to bond solid polymer components to adjacent and underlying substrates.

2.2.3 Silicone Sealant

Sealant shall be a mildew-resistant, FDA and OSHA Nationally Recognized Testing Laboratory (NRTL) listed silicone sealant or caulk in a clear formulation. The silicone sealant shall be approved for use by the solid polymer manufacturer. Use sealant to seal all expansion joints between solid polymer components and all joints between solid polymer components and other adjacent surfaces such as walls, floors, ceiling, and plumbing fixtures.

2.2.4 Conductive Tape

Conductive tape shall be manufacturer's standard foil tape, 4 mils thick, applied around the edges of cut outs containing hot or cold appliances.

2.2.5 Insulating Felt Tape

Insulating tape shall be manufacturer's standard product for use with drop-in food wells used in commercial food service applications to insulate solid polymer surfaces from hot or cold appliances.

2.2.6 Heat Reflective Tape

Heat reflective tape as recommended by the solid polymer manufacturer for use with cutouts for heat sources.

2.2.7 Mounting Hardware

Provide mounting hardware, including sink/bowl clips, inserts and fasteners for attachment of undermount sinks and lavatories.

2.3 FABRICATIONS

Components shall be factory or shop fabricated to sizes and shapes indicated, to the greatest extent practical, in accordance with approved

Shop Drawings and manufacturer's requirements. Provide factory cutouts for sinks, lavatories, and plumbing fixtures where indicated on the drawings. Contours and radii shall be routed to template, with edges smooth. Defective and inaccurate work will be rejected. Submit product data indicating product description, fabrication information, and compliance with specified performance requirements for solid polymer, joint adhesive, sealants, and heat reflective tape. Both the manufacturer of materials and the fabricator shall submit a detailed description of operations and processes in place that support efficient use of natural resources, energy efficiency, emissions of ozone depleting chemicals, management of water and operational waste, indoor environmental quality, and other production techniques supporting sustainable design and products.

2.3.1 Joints and Seams

Form joints and seams between solid polymer components using manufacturer's approved seam adhesive. Joints shall be inconspicuous in appearance and without voids to create a monolithic appearance.

2.3.2 Edge Finishing

Rout and finish component edges to a smooth, uniform appearance and finish. Edge shapes and treatments, including any inserts, shall be as detailed on the drawings. Rout all cutouts, then sand all edges smooth. Repair or reject defective or inaccurate work.

2.3.3 Window Stools

Fabricate window stools from 1/2 inch thick solid surfacing, solid polymer material. Dimensions, edge shape, and other details shall be selected from manufacturer's available pre-fabricated standards.

PART 3 EXECUTION

3.1 INSTALLATION

3.1.1 Components

Install all components and fabricated units plumb, level, and rigid. Make field joints between solid polymer components using solid polymer manufacturer's approved seam adhesives, to provide a monolithic appearance with joints inconspicuous in the finished work. .

3.1.2 Silicone Sealant

Use a clear, silicone sealant or caulk to seal all expansion joints between solid polymer components and all joints between solid polymer components and other adjacent surfaces such as walls, floors, ceiling, and plumbing fixtures. Sealant bead shall be smooth and uniform in appearance and shall be the minimum size necessary to bridge any gaps between the solid surfacing material and the adjacent surface. Bead shall be continuous and run the entire length of the joint being sealed.

3.2 CLEAN-UP

Components shall be cleaned after installation and covered to protect against damage during completion of the remaining project items. Components damaged after installation by other trades will be repaired or replaced at the General Contractor's cost. Component supplier will

provide a repair/replace cost estimate to the General Contractor who shall approve estimate before repairs are made. Submit a minimum of 2_ copies of maintenance data indicating manufacturer's care, repair and cleaning instructions. Maintenance video shall be provided,if available. Maintenance kit for matte finishes shall be submitted.

-- End of Section --

SECTION 07 05 23

PRESSURE TESTING AN AIR BARRIER SYSTEM FOR AIR TIGHTNESS
05/14

PART 1 GENERAL

1.1 SUMMARY

Employ an independent agency to conduct the pressure test on the building envelope in accordance with this specification section and ASTM E779.

1.2 REFERENCES

The publications listed below form a part of this specification to the extent referenced. The publications are referenced within the text by the basic designation only.

AMERICAN SOCIETY FOR NONDESTRUCTIVE TESTING (ASNT)

ANSI/ASNT CP-189	(2016) ASNT Standard for Qualification and Certification of Nondestructive Testing Personnel (ANSI/ASNT CP-105-2006)
ASNT CP-105	(2011) ASNT Standard Topical Outlines for Qualification of Nondestructive Testing Personnel - Item No. 2821
ASNT SNT-TC-1A	(2016) Recommended Practice for Personnel Qualification and Certification in Nondestructive Testing

AMERICAN SOCIETY OF HEATING, REFRIGERATING AND AIR-CONDITIONING ENGINEERS (ASHRAE)

ASHRAE RP-935	(1998) Protocol for Field Testing of Tall Buildings to Determine Envelope Air Leakage Rate

ASTM INTERNATIONAL (ASTM)

ASTM D3464	(1996; R 2014) Standard Test Method for Average Velocity in a Duct Using a Thermal Anemometer
ASTM E1186	(2017) Standard Practices for Air Leakage Site Detection in Building Envelopes and Air Barrier Systems
ASTM E1827	(2011; R 2017) Standard Test Methods for Determining Airtightness of Buildings Using an Orifice Blower Door
ASTM E2029	(2011) Standard Test Method for Volumetric and Mass Flow Rate Measurement in a Duct Using Tracer Gas Dilution

ASTM E779 (2010) Standard Test Method for Determining Air Leakage Rate by Fan Pressurization

INTERNATIONAL ORGANIZATION FOR STANDARDIZATION (ISO)

ISO 6781 (1983) Thermal Insulation - Qualitative Detection of Thermal Irregularities in Building Envelopes - Infrared Method

1.3 DEFINITIONS

The following terms as they apply to this section:

1.3.1 Air Barrier Envelope

The surface that separates the inside air from the outside air. The combination of air barrier assemblies and air barrier components, connected by air barrier accessories are designed to provide a continuous barrier to the movement of air through an environmental separator. A single building may have more than one air barrier envelope. The air barrier surface includes the top, bottom, and sides of the envelope. The term "air barrier envelope" is also known as "air barrier system" or simply "air barrier".

1.3.2 Air Leakage Rate

How leaky, or conversely how air tight a building envelope is. The air leakage is normally described in terms of air flow rate for the surface area of the envelope at a defined differential pressure.

1.3.3 Bias Pressure

Also known as zero flow pressure, baseline pressure, offset pressure or background pressure. With the envelope not artificially pressurized, bias is the differential pressure that always exists between the envelope that has been prepared (sealed) for the pressure test and the outdoors. Bias pressure is made up of two components, fixed static offset (usually due to stack effect or the HVAC system) and fluctuating pressure (usually due to wind or a moving elevator). Because of pressure fluctuations many bias pressure readings are recorded and averaged for use in the calculations.

1.3.4 Blower Door

Commonly used term for an apparatus used to pressurize and depressurize the space within the building envelope and quantify air leakage through the envelope. The blower door typically includes a door fan and an air resistant fabric or a series of hard panels that extends to cover and seal the door opening between the fan shroud and door frame. The door fan is a calibrated fan capable of measuring air flow and is usually placed in the opening of an exterior door. With the air barrier otherwise sealed, air produced by the door fan pressurizes or de-pressurizes the envelope, depending on the fan's orientation.

1.3.5 Environmental Separator

The parts of a building that separate the controlled interior environment from the uncontrolled exterior environment, or that separate spaces within a building that have dissimilar environments. The term "environmental

separator" is also known as the "control layer".

1.3.6 Pressure Test

A generic term for a test in which the envelope is either pressurized or de-pressurized with respect to the outdoors.

1.3.6.1 Negative Pressure Test (Depressurization Test)

A test wherein air inside the envelope is drawn to the outdoors. This places the envelope at a lower (negative) pressure with respect to the outdoors.

1.3.6.2 Positive Pressure Test (Pressurization Test)

A test wherein outdoor air is pushed into the envelope. This air movement places the envelope at a higher (positive) pressure with respect to the outdoors.

1.4 WORK PLAN

Submit the following not later than [120] [_____] calendar days [after contract award, but] before start of pressure testing work, steps to be taken by the lead pressure test technician to accomplish the required testing.

a. Memorandum of test procedure.

(1) Proposed dates for conducting the pressure, thermographic and fog tests.

(2) Submit detailed pressure test procedures prior to the test. Provide a plan view showing proposed locations (personnel doors or other similar openings) to install blower doors or flexible ducts (for trailer-mounted fans), if used.

b. Test equipment to be used.

c. Scaffolding, scissor lifts, power, electrical extension cords, duct tape, plastic sheeting and other Contractor's support equipment required to perform all tests.

d. Other Contractor's support personnel who will be on site for testing.

1.5 SUBMITTALS

Government approval is required for submittals with a "G" designation; submittals not having a "G" designation are for [Contractor Quality Control approval.] [information only. When used, a designation following the "G" designation identifies the office that will review the submittal for the Government.] Submittals with an "S" are for inclusion in the Sustainability eNotebook, in conformance to Section 01 33 29 SUSTAINABILITY REPORTING. Submit the following in accordance with Section 01 33 00 SUBMITTAL PROCEDURES:

SD-01 Preconstruction Submittals

Work Plan; G

SD-03 Product Data

Thermal Imaging Camera; G

SD-05 Design Data

Envelope Surface Area Calculations; G

SD-07 Certificates

Pressure Test Agency
Thermographer Qualifications
Test Instruments
Date Of Last Calibration

SD-06 Test Reports

Pressure Test Procedures; G
Air Leakage Test Report; G
Diagnostic Test Report; G

No later than 14 days after completion of the pressure test, submit [6] [_____] copies of an organized report bound in a durable 3-ring binder. The report is to contain a table of contents, an executive summary, an introduction, a results section and a discussion of the results. Submit the Air Leakage Test Report as described in paragraph AIR LEAKAGE TEST REPORT. Submit a diagnostic test report as described in paragraph LOCATING LEAKS BY DIAGNOSTIC TESTING. The diagnostic test report is to include the Thermographic Investigation Report and the Fog Test Report (if performed).

Submit field data and completed report forms found in the appendices. Use the sample forms, Test Agency Qualification Sheet, Air Leakage Test Form and Air Leakage Test Results Form to summarize the tests for the appropriate building envelope. Submit both electronically populated and field hand filled-in forms.

Report Data. Include in the report the following information for all tests:

a. Date of Issue
b. Project title and number
c. Name, address, and telephone number of testing agency
d. Dates and locations of samples and tests or inspections
e. Names of individuals making the inspection or test
f. Designation of the work and test method
g. Identification of product and Specification Section
h. Complete inspection or test data
i. Test results and an interpretation of test results
j. Comments or professional opinion on whether inspected or tested work complies with contract document requirements
k. Recommendations on retesting

1.6 QUALITY ASSURANCE

1.6.1 Modification of References

Perform all pressure and diagnostic tests according to the referenced publications listed in paragraph REFERENCES and as modified by this section. Consider the advisory or recommended provisions, of the referred references, as mandatory.

1.6.2 Qualifications

1.6.2.1 Pressure Test Agency

Submit, no later than [15] [___] calendar days after contract award, information certifying that the pressure test agency is not affiliated with any other company participating in work on this contract. The work of the test agency is limited to pressure testing the building envelope, performing a thermography test and fog test, and investigating, through various methods, the location of air leaks through the air barrier. See paragraph PRESSURE TEST AGENCY for additional requirements. For thermographer qualifications, see paragraph THERMOGRAPHER QUALIFICATIONS.

Use the sample TEST AGENCY QUALIFICATIONS SHEET form (Appendix C), to submit the following information.

a. Verification of [2][_____] years of experience as an agency in pressure testing commercial and/or industrial buildings.

b. List of at least ten commercial/industrial facilities with building envelopes that the agency has tested within the past 2 years. Include building name, address, and name of prime construction contractor and contractor's point-of-contact information.

c. Confirmation of 2 years of commercial and or industrial building pressure test experience for the lead pressure test technician and the thermographer in using the specified ASTM E779 testing standard. References from five Contracting Officers for facilities where the lead test technician has supervised commercial and or industrial building pressure tests in the last 2 years.

d. Verification that the lead pressure test technician has been employed by a building pressure testing agency in the capacity of a lead pressure test technician for not less than 1 year.

1.6.2.2 Thermographer Qualifications

To perform an infrared diagnostic evaluation, use a lead thermographer who has at least an active Level II Certification that is based on the requirements in ASNT CP-105 or ANSI/ASNT CP-189 and is in accordance with ASNT SNT-TC-1A. The course of study is to be specifically focused on infrared thermography for building science. The thermographer must have at least two years of building science thermography experience in IR testing commercial or industrial buildings. The thermographer must also have experience in building envelopes and building science in order to make effective recommendations to the contractor should the envelope require additional sealing. Submit the thermographer's certificate for approval. Submit a list of at least ten commercial/industrial buildings on which the thermographer has performed IR thermography in the past two years. The thermographer is to have a current active certification. Submit certification at least 60 days prior to thermography testing.

1.6.3 Test Instruments And Date Of Last Calibration

Submit a signed and dated list of test instruments, their application, manufacturer, model, serial number, range of operation, accuracy and date of most recent calibration.

1.7 CLIMATE CONDITIONS SUITABLE FOR A PRESSURE TEST

As the test date approaches, monitor the weather forecast for the test site. Avoid testing on days forecast to experience high winds, rain, or snow. Monitor weather forecasts prior to shipping pressure test equipment to the site. Preferred ambient weather test conditions as stated in ASTM E779 are 0 to 4 mph winds and an ambient temperature range of 41 - 95 degrees F. Based on current and forecast weather conditions, the Contracting Officer's representative is to grant final approval for testing to occur.

1.7.1 Rain

Rain can temporarily seal roof and wall assemblies so that they leak less than under no-rain conditions. Do not test during rain or if rain is anticipated during testing. If pneumatic hoses are installed and exposed to rain inspect the hose to insure rainwater has not migrated into the hose ends. Orient all exposed hose ends to keep them out of water puddles. Success in temporarily sealing outdoor ventilation components such as louvers and exhaust fans may also be compromised by rain. Don't seal roof-mounted ventilation components during times of potential lightning.

1.7.2 Snow

Snow piled against a wall or on top of a roof can make a building envelope appear to be more airtight than it actually is. Snow may also impact thermography readings. Remove snow from around and on top of the building prior to testing.

1.7.3 Wind

Because wind can skew pressure test results, test only on days and at times when winds are anticipated to be the calmest. Avoid pressure testing during gusty or high wind conditions.

PART 2 PRODUCTS

2.1 PRESSURE TEST EQUIPMENT

Depending on site conditions and size of the envelope, the test may be conducted using [blower door equipment] [and/or] [trailer-mounted fans] [or the building's own supply air system]. The testing agency is to supply sufficient quantity of blower equipment that will produce a minimum of 75 Pa differential pressure between the envelope and outdoors using the test methods described herein. Supplying additional blower test equipment to provide additional airflow capacity or to act as a backup is highly recommended.

2.1.1 Blower Door Fans and Trailer Mounted Fans

Each air flow measuring system including blower door fans and trailer mounted fans are to be calibrated within the last 3 years in accordance with ASTM E1827. Calibrated blower door fans and trailer mounted fans must measure accurately to within plus or minus 5 percent of the flow

reading. Blower door equipment and trailer mounted fans are to be specifically designed to pressurize building envelopes. Each set of blower door equipment is to include fan(s), digital gage(s), door frame, door fabric or hard panels.

2.1.2 Digital Gages as Test Instruments

Use only digital gages as measuring instruments in the pressure test; analog gages are not acceptable. The gauges must be accurate to within 1.0 percent of the pressure reading or 0.15 Pa, whichever is greater. Each gage is to have been calibrated within two years of the test. The calibration is to be checked against a National Institute of Standards and Technology (NIST, formerly National Bureau of Standards) traceable standard.

2.2 THERMAL IMAGING CAMERA REQUIREMENTS

The thermal imaging camera used in the thermography test must have a thermal sensitivity (Noise Equivalent Temperature Difference.) of +/- 0.18 degrees F at 86 degrees F or less. Ensure the camera's operating spectral range falls between 2 and 15 micrometers. Ensure the camera's IR image viewing screen resolution measures at least 240x180 pixels. Ensure the camera has a means of recording thermal images seen on the camera viewing screen. The camera is to display output as individual still frame images that also can be downloaded and inserted into an electronic Thermographic Investigation Report. Submit camera make and model, and catalog information that defines the camera thermal sensitivity for approval.

PART 3 EXECUTION

3.1 PRESSURE TEST AGENCY

The test agency is to be an independent third party subcontractor, not an affiliated or subsidiary of the prime contractor, subcontractors or A/E firm. The agency is to be regularly engaged in pressure testing of commercial/industrial building envelopes. If using blower door or trailer-mounted fans, the lead test technician must have at least two years of experience in using such equipment in building envelope pressurization tests. Formal training using pressure test equipment is highly recommended. Technicians using the building's air handling system for pressure testing are to have tested at least five commercial/industrial buildings within the past two years with each building having over 50,000 square feet of floor area. Submit the name, address and floor areas of each of these five buildings for approval.

3.1.1 Field Work

The lead pressure test technician and thermographer are to be present at the project site while testing is performed and is to be responsible for conducting, supervising, and managing of their respective test work. Management includes health and safety of test agency employees.

3.1.2 Reporting Work

The lead pressure test technician is to prepare, sign, and date the test agenda, equipment list, and submit a certified Air Leakage Test Report. The thermographer is to prepare, sign, and date the test agenda, equipment list, and submit a certified Thermographic Investigation Report. The contractor is to prepare a final report that identifies improvements that

were made to the envelope to reduce leaks [, mitigate thermal bridging][, eliminate moisture migration,][, repair insulation voids] discovered during diagnostic tests. Jointly submit all reports.

3.2 ENVELOPE SURFACE AREA CALCULATION

The architectural air barrier boundary includes the floor, walls, and ceiling. After construction of the air barrier envelope is complete, field measure the envelope to ensure the physical measurements match the design drawings and the air barrier envelope surface area calculations. If the measurements are not consistent with the defined air barrier boundary as indicated, re-calculate the envelope surface area and submit the envelope surface area calculation and results for review. [If the air barrier was defined during design but the air barrier envelope surface area was not calculated, calculate it during construction and submit the envelope surface area calculations and result for review.]

3.3 PREPARING THE BUILDING ENVELOPE FOR THE PRESSURE TEST

3.3.1 Testing During Construction

The pressure test cannot be conducted until all components of the air barrier system have been installed. After all sealing as described herein has been completed, inspect the envelope to ensure it has been adequately prepared. During the pressure test, stop all ongoing construction within and neighboring the envelope which may impact the test or the air barrier integrity. The pressure test may be conducted before finishes that are not part of the air barrier envelope have been installed. For example, if suspended ceiling tile, interior gypsum board or cladding systems are not part of the air barrier the test can be conducted before they are installed. Recommend testing prior to installing the finished ceilings within the envelope and immediately surrounding it. The absence of finished ceilings allows for inspection and diagnostic testing of the roof/wall interface and for implementation of repairs to the air barrier, if necessary to comply with the maximum allowed leakage.

3.3.2 Sealing The Air Barrier Envelope

Seal all penetrations through the air barrier. Unavoidable penetrations due to electrical boxes or conduit, plumbing, and other assemblies that are not air tight are to be made so by sealing the assembly and the interface between the assembly and the air barrier or by extending the air barrier over the assembly. Support the air barrier so as to withstand the maximum positive and negative air pressure to be placed on the building without displacement or damage, and transfer the load to the structure. Durably construct the air barrier to last the anticipated service life of the assembly and to withstand the maximum positive and negative pressures placed on it during pressure testing. Do not install lighting fixtures that are equipped with ventilation holes through the air barrier.

3.3.3 Sealing Plumbing

Prime all plumbing traps located within the envelope full of water.

3.3.4 Close and Lock Doors

Close and lock all doors and windows in the envelope perimeter. For doors not equipped with latching hardware, temporarily secure them in the closed position. Secure the doors in such a way that they remain fully closed

even when the maximum anticipated differential air pressure produced during the test acts on them.

3.3.5 Hold Excluded Building Areas at the Outdoor Pressure Level

Keep building areas immediately surrounding but excluded from the test envelope at the outdoor pressure level during the pressure test. Maintain these areas at the outdoor pressure level by propping exterior doors open, opening windows and de-energizing all air moving devices in or serving these areas.

3.3.6 Maintain an Even Pressure within the Envelope

Ensure the pressure differences within the envelope are minimized by opening all internal air pathways including propping open all interior doors. Distribute test fans throughout the envelope as necessary to ensure the internal pressures are uniform (within 10 percent of the average differential pressure). Ideally, do not install suspended ceilings until after all pressure tests have been completed. If, however the envelope includes finished suspended ceiling spaces, temporarily remove approximately 5 percent of all ceiling tiles or a minimum of 1 tile from each isolated suspended ceiling space, whichever comprises the greatest surface area. Temporarily remove additional ceiling tiles during testing to allow for inspection and diagnostic testing of the ceiling/wall interface.

3.3.7 Maintain Access to Mechanical and Electrical Rooms

Maintain access to mechanical rooms and electrical rooms associated with the envelope to allow for de-energizing ventilation equipment and resetting circuit breakers tripped by blower door equipment, if used.

3.3.8 Minimize Potential for Blowing Dust and Debris

Because high velocity air will be blown into and out of the envelope during the test, debris, including dust and litter, may become airborne. Airborne debris may become trapped or entangled in test equipment, thereby skewing test results. Ensure areas within and surrounding the envelope are free of dust, litter and construction materials that are easily airborne. If pressurizing existing, occupied areas, provide adequate notice to building occupants of blowing dust and debris, and general disruption of normal activities during the test.

3.3.9 De-energize Air Moving Devices

De-energize all air moving devices serving the envelope to keep air within the envelope as still as reasonably achievable. De-energize all fans that deliver air to, exhaust air from, or recirculate air within the envelope. Also de-energize all fans serving areas adjacent to but excluded from the envelope.

[3.3.10 Installing Blower Door Equipment in a Door Opening

Where blower door fans are used, before installing blower door equipment, select a door opening that does not restrict air flow into and out of the envelope and has at least 5 feet clear distance in front of and behind the door opening. Disconnect the door actuator and secure the door open to prevent it from being drawn into the fan by fan pressure.

]3.4 BUILDING ENVELOPE AIR TIGHTNESS REQUIREMENT

For each building envelope, perform two pressure tests; the Architectural Only test and the Architectural Plus HVAC System test. The purpose of the pressure (air leakage) test is to determine final compliance with the airtightness requirement by demonstrating the performance of the continuous air barrier. An effective air barrier envelope minimizes infiltration and exfiltration through unintended air paths (leaks). The tests may be performed in any desired order.

3.4.1 Architectural Only Test

The test envelope is the architectural air barrier boundary as defined on the contract drawings. This boundary includes connecting walls, roof and floor which comprise a complete, whole, and continuous three dimensional envelope. Perform both a positive pressure test and a negative pressure test on this envelope, unless otherwise directed.

3.4.1.1 Test Goal

Input data from the test into the Air Leakage Rate by Fan Pressurization spreadsheet as described in paragraph CALCULATION PROGRAM via the Air Leakage Test Form. Compare output from the spreadsheet against the maximum allowable leakage defined in Section 07 27 10.00 10 BUILDING AIR BARRIER SYSTEM. The envelope passes the test if the leakage rate, as calculated using the spreadsheet, is equal to or lower than the Architectural Only leakage rate goal.

3.4.1.2 Preparing The Envelope For The Pressure Test - Seal All Openings Through The Air Barrier

Temporarily close all perimeter windows, roof hatches and doors in the envelope perimeter except for those doors that are to remain open to accommodate blower door or trailer mounted fan test equipment installation. Seal, or isolate all other intentional openings, pathways and fenestrations through the architectural envelope prior to pressure testing. Follow the Recommended Test Envelope Conditions identified in ASTM E1827, Table 1, for the Closed Envelope condition. These openings may include boiler flues, fuel-burning water heater flues, fuel-burning kitchen equipment, clothes dryer vents, fireplaces, wall or ceiling grilles, diffusers etc. Before sealing flues, close their associated fuel valves and verify the associated pilot lights are extinguished. Prime all plumbing traps located within the envelope full of water. In lieu of applying tape and/or plastic, Typical temporary sealing materials include tape and sheet plastic or a self-adhesive grille wrap. Use and apply tape and plastic in a manner that does not deface or remove paint or mar the finish of permanent surfaces. Be especially aware of residue that remains from tape applied to stainless steel surfaces such as kitchen hoods or rollup doors. For painted surfaces, use tape types that do not remove finish paint when the tape is removed. If paint is removed from the finished surface, repaint to match existing surfaces. Secure dampers closed either manually or by using the building's HVAC system controls. Use the table below for further guidance in building preparation.

Building Component	Envelope Condition
Air handling units, duct fans	As found (open) or temporarily sealed as necessary
Clothes dryer	Off
Clothes dryer vents	Temporarily sealed
Dampers - intake, exhaust	Physically closed or closed using control power or temporarily sealed
Diffusers, registers, grilles within the envelope	Temporarily sealed
Doors, personnel type, at the envelope perimeter	Secured closed
Doors, personnel type, within the envelope	Secured (propped) open
Doors, roll-up type, at the envelope perimeter	Closed (no additional sealing)
Exhaust hoods	Closed* and temporarily sealed
Fireplace hearth	Temporarily sealed *
Kitchen hoods	Temporarily sealed *
Pilot light and associated fuel valve	Extinguished and closed, respectively
Vented combustion appliance	Temporarily sealed *
Vented combustion appliance exhaust flue	Off
Windows	Secured closed
* If the building component has an associated manual or automatic damper, consider securing the damper closed in lieu of temporarily sealing.	

3.4.2 Architectural Plus HVAC System Test

This test envelope includes the architectural air barrier boundary as defined on the contract drawings plus all HVAC supply, return and exhaust systems that penetrate and terminate within said architectural air barrier boundary and that extends outward from said boundary. All associated ductwork, intake and exhaust dampers, and air moving devices, including air handling units and fans, are included in this test envelope even if they are physically located outside of the architectural air barrier boundary. The boundary extends to and includes the low leakage intake and exhaust dampers. Perform both a positive pressure test and a negative pressure test on this envelope, unless otherwise indicated.

3.4.2.1 Test Goal

Data from the test is to be input into the Air Leakage Rate by Fan Pressurization spreadsheet as described in paragraph CALCULATION PROGRAM via the Air Leakage Test Form. If both a positive and negative pressure tests were performed, both data sets are together to be input in the

spreadsheet. Compare output from the spreadsheet against the leakage rate goal. The envelope passes the test if the leakage rate, as calculated using the spreadsheet, is equal to or lower than the Architectural Plus HVAC System leakage rate goal.

3.4.2.2 Preparing the Building for the Pressure Test

In preparation of this test, de-energize all air moving devices within this envelope by putting their controls in the Unoccupied mode. This allows the building's HVAC controls to close all associated motorized intake, exhaust, and relief dampers. Make no other changes to the HVAC systems. Temporarily sealing diffusers, grilles, registers, kitchen hoods, exhaust hoods, fans, air handling units and all other HVAC system elements with tape and/or plastic sheeting or any other means is not allowed. If the envelope includes a fireplace hearth do not seal it with tape and plastic. Use the table below for further guidance in building preparation.

Building Component	Envelope Condition
Air handling units, duct fans	As found (open)
Clothes dryer	Off
Clothes dryer vents	As found (no preparation)
Dampers - intake, exhaust	As found (no preparation)
Diffusers, registers, grilles within the envelope	As found (open)
Doors, personnel type, at the envelope perimeter	Secured closed
Doors, personnel type, within the envelope	Secured (propped) open
Doors, roll-up type, at the envelope perimeter	Closed (no preparation)
Exhaust hoods	Closed
Fireplace hearth	As found (open)
Kitchen hoods	As found (open)
Pilot light and associated fuel valve	Extinguished and closed, respectively
Vented combustion appliance	Off
Vented combustion appliance exhaust flue	As found (open)
Windows	Secured closed

3.5 CONDUCTING THE PRESSURE TEST

Notify the Contracting Officer at least 10 working days before conducting the pressure tests to provide the Government the opportunity to witness

the tests and to monitor weather forecasts for conditions favorable for testing. Do not pressure test until verifying that the continuous air barrier is in place and installed without failures in accordance with installation instructions. During the pressure test periodically inspect temporarily sealed items to ensure they are still sealed. Seals on temporarily sealed items tend to release more readily at higher pressures. Test data obtained after temporarily sealed items become unsealed cannot be used as input into the calculation program. Follow the Envelope Pressure Test Procedures in the paragraphs below. Submit detailed pressure test procedures indicating the test apparatus, the test methods and procedures, and the analysis methods to be employed for the building envelope pressure (air tightness) test. Submit these procedures not later than 60 days after Notice to Proceed.

3.5.1 Extend Pneumatic Tubes and Establish a Reference Differential Pressure

Confirm the various zones within the envelope have a relatively uniform interior pressure distribution by establishing a representative differential pressure between the envelope and the outdoors with blower door or trailer-mounted fans operating. The number of indoor pressure difference measurements (pneumatic hoses) required depends on the number of interior zones separated by bottle necks that could create significant pressure drops (e.g. doorways and stairwells). Extend at least four pneumatic hoses (differential pressure monitoring ports) to locations within the envelope that are physically opposite of each other. In multiple story buildings, especially those over three stories, extend hoses to multiple floors. Locate the hose ends away from the effects of air discharge from blower test equipment. Select one of the four (or more) interior hoses, one judged by the test agency to be the most unaffected by air velocity produced by blower test equipment, to serve as the interior reference pressure port. Extend at least one additional pneumatic hose to the outdoors (outdoor pressure port). To the end of this hose manifold at least four hoses together and terminate each hose on a different side of the building. With the envelope sealed and the blowers energized, measure the differential pressure using the interior reference pressure port and the four outdoor pressure ports. Then measure and record the differential pressure by individually using each of the remaining three interior hoses. Ensure each reading is within plus or minus 10 percent of the reference reading. Thus at an average 75 Pa maximum pressure difference across the envelope, the difference between the highest and lowest interior pressure difference measurements should be 15 Pa or less. If this condition cannot be met, attempt to create additional air pathways within the envelope to minimize pressure differences within the envelope. If necessary, move the interior hose ends. See step 2.13 of the Air Leakage Test Form in Appendix A.

3.5.2 Bias Pressure Readings

With the fan pressurization equipment de-energized and the envelope sealed, obtain the differential pressure between the outdoors and the envelope. Record 12 bias pressure readings before the pressure test and 12 bias pressure readings after the pressure test. Each reading is the average of ten or more 1-second measurements. Include positive and negative signs for each reading. To help dampen bias pressures that significantly contribute to test pressure, reduce temperature differences between indoor and outdoor air. Temperature differences can be reduced by operating test fan equipment for a few minutes to replace most of the indoor air with outdoor air.

3.5.3 Testing in Both Positive and Negative Directions

The preferred method for testing a building envelope is to test in both the pressurized and depressurized directions. Testing in one direction is only allowed if opposite direction testing cannot logistically be performed due to test equipment limitations or restrictions. After obtaining the pre-test bias differential pressure readings, conduct the pressure test. Record the envelope pressures (in units of Pascals) from one interior pneumatic hose (monitoring port) and the outdoor pneumatic hose(s), averaged or manifolded, with corresponding flows (in units of cfm) for each fan. Record the flow rates at at least 10 to 12 positive and 10 to 12 negative building pressure readings. If conducting both positive and negative pressure tests the lowest allowable test pressure is 40 Pa and the highest test pressure is 85 Pa. Keep at least 25 Pa difference between the lowest and highest test pressure readings. Include the 75 Pa pressure value between the lowest and highest readings. The 10 to 12 readings in each direction are to be roughly evenly spaced along the range of pressures and flows. After testing is complete de-energize the equipment used to provide pressurization and obtain an additional 10 to 12 post-test bias pressure readings. None of the bias pressure readings are allowed to exceed 30 percent of the minimum test pressure. If these limits are exceeded the test fails and must be repeated.

[3.5.4 Single Direction Testing

After obtaining the 12 aforementioned bias pressure readings, conduct the [positive][negative] pressure test. Obtain flow rates at 10 to 12 roughly evenly spaced pressure readings over a pressure range of [50 to 85][25 to 50] Pa. After the data is recorded, de-energize the blower equipment and obtain an additional 10 to 12 bias pressure readings. None of the bias pressure readings may exceed 10 percent of the minimum test pressure. If these limits are exceeded the test fails.

]3.5.5 Using a Building's Own Air Handling System to Pressure Test an Envelope

3.5.5.1 Test Setup

Temporarily seal the envelope in a manner similar to that for testing with blower door or trailer-mounted fans. To positively pressurize the envelope, de-energize all ventilation equipment and close all associated dampers, except those outside air intake dampers associated with supply fans that will be used to pressurize the building envelope. Fully open these dampers. For the negative pressure test, de-energize all ventilation equipment except for those fans that will be used to de-pressurize the envelope. All dampers associated with de-energized fans are to be closed and all exhaust dampers associated with fans used to de-pressurize the envelope will be fully opened.

3.5.5.2 Measuring Airflows

When using the building's own air handling system to pressure test the envelope, air flows can generally be measured using one of the following methods:

a. [When testing using the building's own air handling system, ensure flow readings obtained by anemometer comply with ASTM D3464.]Pitot tube or hot wire anemometer traverse in accordance with ASTM D3464.

b. Pressure compensated shrouds (especially recommended for rooftop exhaust fans)

c. Tracer gas methods for measuring airflows in ducts in accordance with ASTM E2029. Do not use tracer gas decay, constant injection and constant concentration methods for estimating the total ventilation rate of the envelope.

3.5.5.3 Outdoor Air Flow Measuring Stations

Air flow stations may be used to measure outdoor airflows if one of the above methods is used to check accuracy of at least one air flow reading for each station or if the design of the HVAC system specifically placed outdoor air flow stations in locations that will yield accurate results. Field verify the accuracy of readings at the air flow measuring stations before obtaining pressure test readings.

3.5.6 Pressure Testing - Special Cases

[3.5.6.1 Pressure Testing a Tall or Large Building Envelope

Pressure testing the envelope of a tall or large building may be unworkable and unrealistic using blower door or trailer-mounted equipment. In this case, the test agency may define and pressure test separate zones or floors within the envelope and sum the leakage of all of the zones to create an overall envelope leakage rate. Using this method, the test agency is to comply with the requirements of ASHRAE RP-935.

]3.5.6.2 Pressure Testing a Multiple Isolated Zoned Building

Pressure test each exterior corner zone plus at least an additional 20 percent (as measured by floor area) of remaining zones. The Contracting Officer is responsible for selecting which of these additional zones to test. If all zones pass the pressure test it is assumed that all untested zones also pass and no further testing is required. If, however, any zone fails to pass the test's leakage requirements, re-seal and re-test until it passes in accordance with paragraph FAILED PRESSURE TEST. Test an additional 20 percent of previously untested zones. If all tested zones pass, no further testing is needed. If any zone in this group fails the test re-seal and re-test the zone until it passes. Continue this process until all the tested zones pass. When testing a zone, the doors to all adjacent zones that share a common surface with the tested zone are to have their doors opened to the outdoors. The resulting leakage from the test zoned is that through all 6 sufaces (4 walls, roof and floor, for a rectangular shaped zone).

3.5.6.3 Pressure Testing a Building Addition

If the existing building is occupied, coordinate the pressure test with building representatives. In preparation of the test, de-energize the air handling system serving that portion of the existing building that shares surfaces with the new building addition. Pressure testing a new building addition may also require pressurizing that part of the existing building that shares surfaces in common with the new building addition. If an air barrier is applied to the common surfaces separating the existing building from the new addition, prior to the test prop open a sufficient quantity of doors and/or windows to keep the existing building at the same pressure as the outdoors. If an air barrier is not applied to the common surfaces

separating the existing building from the new addition, pressurize that part of the existing building that shares surfaces in common with the building addition to the same level as the as the addition using separate test pressurization equipment.

3.5.7 Failed Pressure Test

If the pressure test fails to meet the established criteria, use diagnostic test methods described in paragraph LOCATING LEAKS BY DIAGNOSTIC TESTING to discover the leak locations. Provide additional permanent sealing measures to reduce or eliminate leak sources discovered during diagnostic testing. Retest (perform another pressure test) after sealing has been completed. Repeat this sequence of documenting test results in the test report, performing diagnostic tests, documenting recommendations for additional sealing measures in the test report, sealing leak locations per recommendations, and re-testing as necessary until the building envelope passes the pressure test and is in compliance with the performance requirements.

3.5.8 Air Leakage Test Report

Report volumetric flow rates and corresponding differential pressures in cubic feet per minute (cfm) and Pascals (Pa), respectively, on the Air Leakage Test Form sample form found in Appendix A. Populate the accompanying spreadsheet file entitled Pressure Test Data Analysis with information obtained during the test. The spreadsheet uses equations found in ASTM E779 as a basis for calculating the envelope leakage rate. Other similar leakage rate calculation programs cannot be used or submitted for review. Submit a printout of the data input and output in the report. Should any air tightness (pressure) test fail, the pressure test report is to include data and results from all previous failed tests along with the final successful test data and results. Indicate if the resulting leakage rate did or did not meet the goal leakage requirement. Identify and document deficiencies in the building construction upon failure of a test to meet the specified maximum leakage rate.

Include the Test Agency Qualification Sheet, Air Leakage Test Form and Air Leakage Test Results Form in the written report. Document every test set-up condition with diagrams and photos to ensure the tests can be made repeatable. Document all pneumatic hose termination locations. Record in detail how the building envelope was prepared for the tests. Also describe in detail which building items were temporarily sealed. Include photos of test equipment and sealing measures in the report. Include an electronic (pdf) version of all test reports on a CD. If the building envelope fails to meet the leakage rate goal, provide recommendations to further seal the envelope and document these recommendations in the test report.

3.6 LOCATING LEAKS BY DIAGNOSTIC TESTING

Use diagnostic test methods described herein to discover obvious leaks through the envelope. Perform diagnostic tests on the building envelope regardless of the envelope meeting or failing to meet the designated leakage rate goal. Use diagnostic test methods in accordance with ASTM E1186 and in conjunction with pressurization equipment as necessary. Use the thermography diagnostic test to establish a baseline for envelope leakage. Apply additional diagnostic tests (find, feel, fog or other tests) as necessary to further define leak locations and pathways discovered using thermography or to find additional leaks not readily

detected by thermography. Using a variety of diagnostic tests may help locate leaks that would otherwise go undetected if only a single diagnostic test were used. Pay special attention to locating leaks at interfaces where there is a change in materials or a change in direction of like materials. These interfaces, at a minimum, include roof/wall, wall/wall, floor/wall, wall/window, wall/door, wall/louver, roof mounted equipment/roof curb interfaces and all utility penetrations (ducts,pipes, conduit, etc) through the envelope's architecture. Also use diagnostic tests to check for leakage between the air duct and duct damper, when the damper, under normal control power, is placed in the closed position. Should leaks be discovered during diagnostic tests, thoroughly document their exact locations on a floor plan so that sealing can be later applied, if required or as directed. If the envelope passes the leakage test, use the diagnostic test procedure described above to identify obvious leakage locations. Seal the leaks at the discretion of the COR based on the magnitude, location, potential for liquid moisture penetration or retention, potential for condensation, presence of daylight through an architectural surface or if the leakage location could potentially cause rapid deterioration or mold growth of, or in the building envelope materials and assemblies. Apply sealing measures after diagnostic testing is complete and all pressurization blowers are off. To verify that the applied sealing measures that are effective, re-test for leaks using the same diagnostic methods that discovered the leak. Reseal and retest until the envelope meets the leakage rate goal and all obvious leaks through the envelope are sealed.

3.6.1 Find Test

Use visual observation to locate daylight and/or artificial light streaming from the opposite side of the envelope. Observe all interfaces identified above.

3.6.2 Feel Test

Use the building's air handling system or blower door equipment to negatively pressurize the building envelope, to at least 25 Pa but no greater than 85 Pa, with respect to the outdoors. The larger the pressure difference, the easier discovering leaks by feeling them becomes. While inside the envelope, hand feel roof/wall, wall/wall, and floor/wall interfaces and utility penetrations (ducts, pipes, conduit, etc) for leaks and note the leak locations on a floor plan. The "Feel" test may also be used to check for leaks between the ductwork and ductwork damper. To do this, positively pressurize the envelope and check for air movement from the envelope exterior.

3.6.3 Infrared Thermography Test

Avoid performing thermography tests just after pressure testing the building envelope (pressurizing and/or depressurizing the building envelope) as thermography readings may be inaccurate due to excessive air-wash. Perform thermography either before the pressure test or wait an appropriate amount of time after pressure test completion for the temperatures within the building envelope to stabilize before starting the thermography tests. Coordinate thermography examination with the pressure test agency and the test agency's pressurization equipment. The pressure test agency is to allow adequate time for the thermographer to perform a complete thermographic examination, as described hereinafter, of the envelope interior and exterior.

3.6.3.1 Thermography Test Methods

Before thermographic testing, remove furniture, construction equipment, and all other obstructions both inside and outside the building as necessary to gain a clear field of view. In the Thermographic Investigation Report, document all areas where obstructions remain. For exterior thermal examination of the envelope, verify that no direct solar radiation has heated the envelope surfaces to be examined for a period of approximately 3 hours for frame construction and for approximately 8 hours for masonry veneer construction. Conduct exterior investigations after sunset, before sunrise, or on an overcast day when the influence of solar radiation can be determined to be minimal. Limit exterior examinations to times when the influence of solar radiation is minimal, such as after sunset or before sunrise or during an overcast day. Conduct thermal imaging tests only when wind speeds are less than 8 mph at the time of analysis and at the end of analysis. Document any variations in wind during the test. Document all variations of test conditions in the Thermographic Investigation Report. Test only when exterior surfaces are dry. Monitor and document ongoing test parameters, such as the temperatures inside and outside the air barrier envelope, wind speed, and differential pressure.

3.6.3.1.1 Thermography Testing of the Air Barrier

Test the building envelope in accordance with ISO 6781, and ASTM E1186. Perform a complete thermographic inspection consisting of the full inspection of the interior and exterior of the complete air barrier envelope. Document envelope areas that are inaccessible for testing. Use infrared thermography technology in concert with standard pressurization methods (blower doors, trailer mounted fans and/or the building's own air handling systems) to locate leaks through the air barrier. Because thermography works best with at least a 18 degree F temperature difference between the envelope interior and the exterior, adjust the HVAC system, if possible, to create or enhance this temperature difference. The minimum allowable temperature difference is 3 degrees F. Maintain this temperature difference for at least 3 hours prior to the test. Use pressurization methods to establish a minimum of +20 Pa pressure difference with respect to the outdoors while using an infrared camera to view the envelope from outdoors. When viewing with the camera from inside the envelope, keep the envelope at a pressure differential of -20 Pa with respect to the outdoors using pressure testing equipment or the building's own air handling system.

3.6.3.1.2 Thermography Testing of the Insulation Envelope to Find Insulation Voids (Qualitative Test)

After installation of the insulation envelope is complete, use thermography to identify anomalies (insulation voids) in this envelope. Test only when the temperature difference between inside and outside wall surfaces and as defined by the surface being imaged is a minimum of 18 degrees F or greater for a period of 4 hours before the test. Alternatively, the thermographer is to verify and document in the Thermographic Investigation Report that the imaging system is capable of providing satisfactory results with less temperature difference between inside and outside. Test during a time when there is no more than 0.05 inches differential pressure across the insulation envelope. Document the location of the voids on floor plans or wall sections.

3.6.3.1.3 Thermography Testing of Thermal Bridging

Take sample thermal images of representative parts of the building envelope being examined and analyze to demonstrate the majority of areas with anomalies or identifiable thermal features. Also sample thermal bridges in parts of the building that have no apparent anomalies to demonstrate the correct functioning of building components. [In existing buildings, look for interior surface pattern staining. Such staining may be evidence of thermal bridges. This pattern staining is the deposition of dirt, often accompanied by mold growth, which occurs on the inside surface of the thermal bridge.]

3.6.3.2 Thermography Test Results

Document the location of all leaks, anomalies, and unusual thermal features on a floor plan and/or elevation view and catalog them with a visible light picture for locating the defect for correction. The thermographer is to recommend corrective actions to eliminate the leaks, anomalies and unusual thermal features. Where leaks are found perform corrective sealing as necessary to achieve the whole envelope air leakage rate specified. After sealing, again use thermography in concert with standard pressurization methods to verify that the air leakage has been reduced. After these leaks have been permanently sealed note all actions taken on the drawings or in the Thermographic Investigation Report. Submit the drawings for approval as part of the Thermographic Investigation Report. Also include thermographic photos that show where leaks were discovered. Include thermograms using an imaging palette that clearly shows the observed thermal patterns indicating air leakage. The Contracting Officer's Representative is to witness all testing.

3.6.4 Fog Test

Before using a theatrical fog generator, disable all building smoke detectors as they may alarm when fog is issued. Coordinate fog tests and the disabling of all smoke detectors with the Contracting Officer's representative and the local fire department as necessary. Use pressure test equipment or the buildings own air handling system to positively pressurize the building envelope to at least 25 Pa but not greater than 85 Pa over the outdoors. Using a theatrical fog generator within the envelope, direct fog at suspected leakage points such as at building interfaces. Test the following interfaces: roof/wall, wall/wall, floor/wall, wall/window, roof/ mounted mechanical equipment. From the vantage point immediately outside the envelope and opposite that of the interface being tested, observe the effect as the fog is issued. Detection may also be further enhanced by using a scented fog liquid or a fog liquid that produces a colored fog. Look for fog and smell for associated odor percolating through the interface. Also use smoke puffers and smoke sticks as necessary to locate leaks at these and other interface locations. If the Architectural Plus HVAC System pressure test will be/was performed introduce fog into ductwork to check for leakage between ductwork and associated dampers. After fog testing has ended, reactivate the building smoke detectors and notify the Contracting Officer and local fire department that the test has ended. After sealing has been completed retest these areas using fog. Seal additional leaks that are found.

3.6.5 Diagnostic Test Report

Once the diagnostic tests have been completed and the leakage locations identified and sealed, document these procedures, locations and recommendations in the diagnostic test report. Submit plan and/or profile

drawings that thoroughly identify leak locations. Describe in detail all leak locations so that the seal-up crew knows where to apply sealing measures. After sealing measures have been applied, describe the methods used along with applicable photos of the final sealed condition.

3.6.5.1 Thermographic Investigation Report

Submit a report of each thermographic investigation identifying the thermal discontinuities in the thermal control layer. Indicate in the final report locations to which improvements for both the air control layer and the thermal control layer were made to reduce air leaks and correct discontinuities in the thermal control layer. Include in the report some selected radiometric images of suspected failure points in the air barrier envelope that indicate before and after conditions.[Devote a chapter(s) of the Thermographic Investigation Report to identifying suspected points of thermal bridging, moisture migration through roofs and walls, and insulation voids.] Indicate in the final report improvements that were made to the envelope to reduce air leaks[, correct wet roof and wall areas][, and repair insulation]. Include the following items in the report:

a. Brief description of the building construction

b. Types of interior and exterior surface materials used in the building.

c. Geographical orientation of the building with a description of the exterior surroundings including other buildings, vegetation, landscaping, and surface water drainage.

d. Camera brand, model and serial number, and date of most recent calibration date; optional lenses with serial numbers (if applicable)

e. Thermographer's and Government Inspector's names

f. Date and time of tests

g. Air temperature and humidity inside the air barrier envelope

h. Outdoor air temperature and humidity

i. General information for the last 12 hours on the solar radiation conditions in the geographic area where the test is being performed.

j. Ambient conditions such as precipitation and wind direction and speed occurring with the last 24 hours, as applicable. Refer to specific requirements in each section of each thermographic inspection type for requirements in each specific area.

k. Documentation of those portions of the building envelop which were not within test conditions when the scan was performed and which portions were obstructed by adjacent structures, interior furnishings, intervening cavities or reflective surfaces.

l. Other relevant information, which may have influenced test results.

m. Drawings, sketches, floor plans and/or photographs detailing the locations in the buildings where thermograms were taken detailing possible irregularities in the components being tested.

n. Thermal images taken during the inspection with their relative locations and written or voiced recorded explanations of the anomaly listed along with visual and reference images.

o. An identification of the aspects or components of the building being examined.

p. Explanations for the type and the extent of each construction defect observed during the inspection.

q. Any results from additional measurements and investigations. Identify additional equipment used and support with type, model number, serial number and date of most recent calibrated.

3.6.5.2 Fog Test Report

Document all turbulent air flow and dead air spaces within the envelope. Report fog behavior as it exits from and/or is entrained within the building. Include a floor plan in the report that documents the locations where fog passed through the envelope.

3.7 CALCULATION PROGRAM

To calculate the envelope leakage rate and other required outputs, input the data obtained during the pressure tests as documented in the Air Leakage Test Form (Appendix A) into the Air Leakage Rate by Fan Pressurization Excel spreadsheet. This spreadsheet can be found at the following web site:
http://www.wbdg.org/ffc/dod/unified-facilities-guide-specifications-ufgs/forms-graphic

3.8 AFTER COMPLETION OF THE PRESSURE AND/OR DIAGNOSTIC TEST

After all pressure and/or diagnostic testing has been completed unseal all temporarily sealed items. Unless otherwise directed by the Contracting Officer, return all dampers, doors, and windows to their pre-test condition. Remove tape and plastic from all temporarily sealed openings, being careful not to deface painted surfaces. If paint is removed from finished surfaces, repaint to match existing surfaces. Unless otherwise directed by the Contracting Officer's representative, return fuel (gas) valves to their pre-test position and relight pilot lights. Return all fans and air handling units to pre-test conditions.

3.9 REPAIR AND PROTECTION

Repair and protection is the Contractor's responsibility, regardless of the assignment of responsibility for testing, inspection, and similar services. Upon completion of inspection, testing, or sample taking and similar services, repair damaged construction and restore substrates and finishes, protect construction exposed by or for quality control service activities, and protect repaired construction.

3.10 APPENDICES

The following forms are available for download as a MS Word file at
http://www.wbdg.org/ffc/dod/unified-facilities-guide-specifications-ufgs/forms-graphic

Appendix A - Air Leakage Test Form
Appendix B - Air Leakage Test Results Form
Appendix C - Test Agency Qualifications Sheet

-- End of Section --

SECTION 07 11 13

BITUMINOUS DAMPPROOFING
08/11

PART 1 GENERAL

1.1 REFERENCES

The publications listed below form a part of this specification to the extent referenced. The publications are referred to within the text by the basic designation only.

ASTM INTERNATIONAL (ASTM)

ASTM D1187/D1187M	(1997; E 2011; R 2011) Asphalt-Base Emulsions for Use as Protective Coatings for Metal
ASTM D1227	(2013) Emulsified Asphalt Used as a Protective Coating for Roofing
ASTM D41/D41M	(2011; R 2016) Standard Specification for Asphalt Primer Used in Roofing, Dampproofing, and Waterproofing
ASTM D4479/D4479M	(2007; E 2012; R 2012) Asphalt Roof Coatings - Asbestos-Free
ASTM D449/D449M	(2003; R 2014; E 2014) Asphalt Used in Dampproofing and Waterproofing

1.2 SUBMITTALS

Government approval is required for submittals with a "G" designation; submittals not having a "G" designation are for Contractor Quality Control approval. Submit the following in accordance with Section 01 33 00 SUBMITTAL PROCEDURES:

SD-07 Certificates

Materials

1.3 DELIVERY AND STORAGE

Deliver materials in sealed containers bearing manufacturer's original labels. Labels shall include date of manufacture, contents of each container, performance standards that apply to the contents and recommended shelf life.

PART 2 PRODUCTS

2.1 ASPHALT

ASTM D449/D449M, Type I or Type II.

2.2 ASPHALT PRIMER

ASTM D41/D41M.

2.3 FIBROUS ASPHALT

ASTM D4479/D4479M, Type I for horizontal surfaces, Type II for vertical surfaces.

2.4 EMULSION-BASED ASPHALT DAMPPROOFING

2.4.1 Fibrated Emulsion-Based Asphalt

Fibrated emulsion-based asphalt dampproofing shall be cold-applied type conforming to ASTM D1227 Type II, Class 1, asbestos-free, manufactured of refined asphalt, emulsifiers and selected clay, fibrated with mineral fibers. For spray or brush application, emulsion shall contain a minimum of 59 percent solids by weight, 56 percent solids by volume. For trowel application, emulsion shall contain a minimum of 58 percent solids by weight, 55 percent solids by volume.

2.4.2 Non-Fibrated Emulsion-Based Asphalt

Non-fibrated emulsion-based asphalt dampproofing shall be cold-applied type conforming to ASTM D1187/D1187M Type II or ASTM D1227 Type III, manufactured of refined asphalt, emulsifiers and selected clay. Asphalt shall contain a minimum 58 percent solids by weight, 55 percent solids by volume.

PART 3 EXECUTION

3.1 SURFACE PREPARATION

Clean concrete and/or masonry surfaces to receive dampproofing of foreign matter and loose particles. Apply dampproofing to clean surfaces. Surfaces must be dry unless an Emulsion-Based Asphalt is used; optimal application of an Emulsion-Based Asphalt is to a slightly damp surface as per manufacturer's instructions.

3.1.1 Metal Surfaces

Metal surfaces shall be dry and be free of rust, scale, loose paint, oil, grease, dirt, frost and debris.

3.2 Protection of Surrounding Areas

Before starting the dampproofing work, the surrounding areas and surfaces shall be protected from spillage and migration of dampproofing material onto other work.

3.3 APPLICATION

Use cold-application method. Prime surfaces to receive fibrous asphaltic dampproofing unless recommended otherwise by dampproofing materials manufacturer. Apply dampproofing after priming coat is dry, but prior to any deterioration of primed surface, and when ambient temperature is above 40 degrees F.

3.3.1 Surface Priming

Prime surfaces to receive asphalt or fibrous asphalt dampproofing with

asphalt primer as recommended by manufacturer. Apply primer when ambient temperature is above 40 degrees F and at rate of approximately one gallon per 100 square feet, fully covering entire surface to be dampproofed.

3.3.2 Cold-Application Method

3.3.2.1 Fibrous Asphalt

Apply two coats of fibrous asphalt to surfaces to be dampproofed. Apply each coat uniformly using not less than one gallon fibrous asphalt per 50 square feet. Apply first coat by brush or spray to provide full bond with primed surface. Brush or spray second coat over thoroughly dry first coat unless recommended otherwise by dampproofing materials manufacturer. Provide finished surface that is of uniform thickness and impervious to moisture. Recoat porous areas.

3.3.2.2 Emulsion-Based Asphalt

Emulsion-based asphalt dampproofing work shall not be performed in temperatures below 40 degrees F. Emulsions shall have a smooth and uniform consistency at time of application. Dampproofing materials shall be applied in accordance with manufacturer's published instructions to produce a smooth uniform dry film of not less than 12 mils thick without voids or defects. Dull or porous spots shall be recoated. Dampproofing materials shall seal tightly around pipes and other items projecting through dampproofing. Rates of application shall be as follows:

a. Primer: 1/2 gallon per 100 square feet, cold-applied.

b. Fibrated Dampproofing: 2 gallons per 100 square feet, cold-applied with spray, brush or trowel.

c. Non-fibrated Dampproofing: 2 gallons per 100 square feet, cold-applied with spray, brush or trowel.

3.4 PROTECTIVE COVERING

Protect dampproofed surfaces against which backfill will be placed with one layer of 15 pound saturated felt conforming to the requirements specified herein. Use asphalt-saturated felt where the dampproofing material is asphalt. Embed felts in the second coating of bitumen and lap edges and ends not less than one inch. In liew of saturated felt 1/2 inch thick wood fiberboard or perlite board may be used.

-- End of Section --

THIS PAGE HAS BEEN INTENTIONALLY LEFT BLANK

SECTION 07 15 00.00 22

AIR AND VAPOR BARRIERS
11/15

PART 1 GENERAL

1.1 REFERENCES

The publications listed below form a part of this specification to the extent referenced. The publications are referred to within the text by the basic designation only.

ASTM INTERNATIONAL (ASTM)

ASTM C1060	(2011; Rev A; R 2015) Standard Practice for Thermographic Inspection of Insulation Installations in Envelope Cavities of Frame Buildings
ASTM D1876	(2008; R 2015; E 2015) Standard Test Method for Peel Resistance of Adhesives (T-Peel Test)
ASTM D1970/D1970M	(2015) Self-Adhering Polymer Modified Bituminous Sheet Materials Used as Steep Roofing Underlayment for Ice Dam Protection
ASTM D2000	(2012) Standard Classification System for Rubber Products in Automotive Applications
ASTM D3767	(2003; R 2014) Standard Practice for Rubber - Measurements of Dimensions
ASTM D412	(2006a; R 2013) Standard Test Methods for Vulcanized Rubber and Thermoplastic Elastomers - Tension
ASTM D4541	(2009; E 2010) Pull-Off Strength of Coatings Using Portable Adhesion Testers
ASTM E1186	(2003; R 2009) Standard Practices for Air Leakage Site Detection in Building Envelopes and Air Barrier Systems
ASTM E154/E154M	(2008a; R 2013; E 2013) Water Vapor Retarders Used in Contact with Earth Under Concrete Slabs, on Walls, or as Ground Cover
ASTM E162	(2013) Surface Flammability of Materials Using a Radiant Heat Energy Source
ASTM E1677	(2011) Standard Specification for Air Barrier (AB) Material or System for Low-Rise Framed Building Walls

ASTM E1680	(2011) Standard Test Method for Rate of Air Leakage Through Exterior Metal Roof Panel Systems
ASTM E2178	(2013) Standard Test Method for Air Permeance of Building Materials
ASTM E2357	(2011) Standard Test Method for Determining Air Leakage of Air Barrier Assemblies
ASTM E283	(2004; R 2012) Determining the Rate of Air Leakage Through Exterior Windows, Curtain Walls, and Doors Under Specified Pressure Differences Across the Specimen
ASTM E779	(2010) Standard Test Method for Determining Air Leakage Rate by Fan Pressurization
ASTM E96/E96M	(2014) Standard Test Methods for Water Vapor Transmission of Materials

INTERNATIONAL ORGANIZATION FOR STANDARDIZATION (ISO)

ISO 6781	(1983) Thermal Insulation - Qualitative Detection of Thermal Irregularities in Building Envelopes - Infrared Method

US ARMY CORPS OF ENGINEERS (USACE)

USACE-ALTP	Air Leakage Test Protocol for Measuring Air Leakage in Buildings

1.2 SUBMITTALS

Government approval is required for submittals with a "G" designation; submittals not having a "G" designation are for Contractor Quality Control approval. The following shall be submitted in accordance with Section :

SD-02 Shop Drawings

Shop Drawings

Manufacturer's standard detail catalog and shop drawings depicting typical and specific detail conditions of the required installation. Details shall include, but are not limited to, interface with other envelope assemblies and materials, corners, terminations, transitions, joints and gaps to be bridged, and sealing of attachments and penetrations through the barrier membrane materials.

SD-03 Product Data

Fluid-applied membrane barrier; G

Exterior Wall Air Barrier; G

Composite, self-adhering membrane barrier sheeting; G

Accessory materials

Submit product data to identify the materials to be used and compliance with specified requirements.

SD-04 Samples

Mock-Up

Composite, self-adhering membrane barrier sheeting

SD-05 Design Data

Design Data

Information related to the postive and negative pressure resistance and adhesion properties (e.g., pull-off and peel strength), where applicable, of the barrier material to the substrate.

SD-06 Test Reports

Test Reports; G

Whole Building Air Leakage Test Report; G

Thermography Test Report; G

Bond Adhesion Strength Test Report; G

SD-07 Certificates

Manufacturer's certification of materials compatibility; G

Inspector Qualifications; G

Whole Building Air Leakage Test Technician Qualifications; G

Thermography Technician Qualifications; G

Certify that the inspectors and technicians meet the specified requirements.

Whole Building Air Leakage Test Procedures; G

Thermography Test Procedures; G

SD-08 Manufacturer's Instructions

Manufacturer's instructions; G

Detailed surface preparation and application instructions and precautions for all materials used, including but not limited to, membrane, fluid-applied products, cleaners, primers, adhesives, mastics, and other accessory materials.

Material safety data sheets (MSDS).

1.3 PREINSTALLATION CONFERENCE

Prior to starting application of the air and vapor barrier system, arrange and attend a preinstallation conference to ensure a clear understanding of the requirements. Give the Contracting Officer 7 days advance written notice of the time and place of meeting. Ensure that the air and vapor barrier inspector, mechanical and electrical subcontractor, flashing and sheetmetal subcontractor, and other trades that may perform other types of work penetrating through, on, or over the barrier membrane attend this conference. The conference shall address where each sub-contractor begins and ends, the sequence of installation, and each sub-contractor's responsibility to ensure airtight joints, junctures, penetrations and transitions between materials, products, and assemblies of products specified in the different sections to be installed by the different sub-contractors.

1.4 DELIVERY, STORAGE, AND HANDLING

Deliver materials in manufacturer's original, unopened containers, with labels intact and legible. Containers of materials covered by a referenced specification number shall bear the specification number, type, and class of the contents. Deliver materials in sufficient quantity to continue work without interruption. Store and protect materials in accordance with manufacturer's instructions, and use within their indicated shelf life. When hazardous materials are involved, adhere to special precautions of the manufacturer, unless precautions conflict with local, state, and federal regulations. Promptly remove from the site materials or incomplete work adversely affected by exposure to moisture, freezing, or contaminents. Store materials on pallets and cover from top to bottom with canvas tarpaulins.

1.5 ENVIRONMENTAL CONDITIONS

Apply materials when ambient temperature is 40 degrees F or above for a period of 24 hours prior to the application and when there is no ice, frost, surface moisture, or visible dampness on the substrate surface, except as allowed by the product manufacturer's published instructions. Apply materials when air temperature is expected to remain above 40 degrees F during the cure period recommended by the manufacturer. Work may be performed within heated enclosures, provided the surface temperature of the substrate is maintained at a minimum of 40 degrees F for 24 hours prior to the application of the materials, and remains above that temperature during the cure period recommended by the manufacturer.

1.6 PERFORMANCE REQUIREMENTS

1.6.1 General Materials Performance Requirements

All materials of the barrier membrane system shall comply with the following:

a. Air Permeance of Materials - Materials shall have an air permeance less than or equal to 0.004 cfm/sf under a pressure differential of 1.57 psf when testing in accordance with ASTM E2178.

b. Moisture Vapor Permeance - Materials shall have the following water vapor permeance when tested in accordance with ASTM E96/E96M:

   1) Wall System Vapor Barrier: see Part 2 product discription below

   2) Roof System Vapor Barrier: see Part 2 product discription below

3) Under-Slab (Slab on Grade) Vapor Barrier: 0.01 perms or less

1.6.2 Assembly Performance Requirements

The assembly shall accommodate movements of building materials by providing expansion and control joints and flexible connections as required with accessory air and vapor seal materials at such locations, changes in substrate and perimeter conditions. Assembly shall be capable of withstanding combined positive and negative design wind, fan and stack pressures on the envelope without damage or displacement, and shall transfer the load to the structure. Assembly shall not displace adjacent materials under full load. Assembly shall be joined in an air and water-tight flexible manner to the barrier material of adjacent assemblies, allowing for the relative movement of assemblies due to thermal and moisture variations and creep, and anticipated seismic movement. For drainage or cavity wall constructions, the air and vapor barrier assembly shall perform as a liquid drainage plane flashed to discharge condensation or water penetration to the exterior.

1.6.2.1 Connections

Connections shall prevent air leakage and vapor migration at the following locations:

a. Foundation and walls, including penetrations, ties and anchors.

b. Walls, windows, curtain walls, storefronts, louvers or doors.

c. Different wall assemblies, and fixed openings within those assemblies.

d. Wall and roof connections and penetrations.

e. Floors over unconditioned space.

f. Walls, floor and roof across construction, control and expansion joints.

g. Walls, floors and roof to utility, pipe and duct penetrations.

h. Seismic and expansion joints.

i. All other leakage pathways in the building envelope.

1.6.3 Air Permeance of Assemblies

Assemblies of materials and components including, but not limited to, sealants and tapes, shall have an average air leakage of 0.04 cfm/sf or less under a pressure differential of 1.57 psf when tested in accordance with ASTM E2357, ASTM E1680, ASTM E1677, or ASTM E283, as applicable to the assembly.

1.6.4 Whole Building Air Leakage

Whole building air leakage testing shall indicate air leakage not to exceed 0.25 cfm/sf of building envelope area at a pressure differential of 1.57 psf when tested in accordance with USACE-ALTP Air Leakage Test Protocol for Measuring Air Leakage in Buildings.

1.7 QUALITY CONTROL

The Contractor shall provide quality control personnel, procedures, testing and verification as specified. The Contractor shall facilitate inspections, tests, and other quality control services specified elsewhere in the Contract Documents and required by the Contracting Officer.

1.7.1 Coordination of Sub-Contractor(s)

The Contractor shall provide coordination between the sub-contractors involved in the construction of the air and vapor barrier system, coordinate the sequence of construction to ensure continuity of the barrier system joints, junctures, penetrations, and transitions between materials and assemblies of materials and products from substructure to walls to roof.

1.7.2 Inspection

The Contractor shall provide an experienced inspector knowledgeble of air and vapor barrier construction to oversee: the sequencing and installation of the air and vapor barrier component materials and assemblies; the proper joining and sealing of the materials and assemblies; the sealing of penetrations of the barrier materials and assemblies; and to instruct the subcontractors on the above. The inspector shall also verify the items under "Field Quality Control" paragraph of this specification section.

1.7.2.1 Inspector Qualifications

The inspector shall have a minimum of 3 years experience in the installation of air and vapor barrier materials and assemblies in similar construction including the experience in joining and sealing various components, and sealing of penetrations of the barrier. The inspector shall have experience coordinating and instructing installers involved in the installation, joining, and sealing of the barrier system materials and components.

1.7.2.2 Documentation and Reporting

Document the installation process on daily reports to the Contracting Officer. Include information on the installer, substrates, substrate preparation, products used, ambient and substrate temperature, the location of the barrier installation, problems encountered and their resolution, the results of the quality control procedures, and any testing results.

1.7.3 Mock-Up

The Contractor shall build a construction mock-up to include back-up wall, typical penetrations, joint conditions, junctures, and transition between materials, products, and assemblies of products specified in the different sections to be installed. Mock-up shall be of a minimum of 8 feet by 8 feet and of additional size required to include the noted conditions of the installation. Work will not proceed until the mock-up construction is satisfactory to the Contracting Officer.

1.7.4 Testing

The Contractor shall perform the testing specified. Qualified personnel meeting the specified requirements shall conduct the test and report the

test results.

1.7.4.1 Whole Building Air Leakage Test Technician Qualifications

The testing technician shall have a minimum of 3 years experience in whole building leakage testing using the specified testing procedure. Technician shall also have experience in identifying deficiencies in the building construction upon failure of the test to meet the specified requirements.

1.7.4.2 Thermography Technician Qualifications

The testing technician shall have received formal training in the application of infrared thermography to building envelope inspection, moisture intrusion, and energy loss in buildings. Training shall be documented by certificate from a recognized thermographer training organization such as the Infrared Training Center, Building Science Institute, Infraspection Institute, or other entity as approved by and at the sole discretion of the Contracting Officer. The thermographer shall have a minimum of 5 years experience in infrared thermography applied to building science.

1.7.4.3 Test Procedures

The Contractor shall submit detailed test procedures indicating the test apparatus, the test methods and procedures, and the analysis methods to be employed for the Whole Building Air Leakage Test and the Thermography Test. The procedure shall be submitted not later than 90 days after the Notice to Proceed.

1.7.4.4 Test Reports

The inspection and testing agency shall submit a certifed written report, in duplicate, of each inspection, test, or similar service to the Contracting Officer not later than 10 days after each inspection or test. The report shall include the following information as a minimum:

a. Date of issue

b. Project title and number

c. Name, address, and phone number of the testing agency

d. Names of individuals making the inspection or test

e. Dates and locations of tests, inspections, or samples

f. Designation of the Work and test method

g. Identification of product(s) and applicable specification section

h. Complete, detailed inspection or test data

i. Test results and a professional, conclusive interpretation of the test results

j. Comments and profession opinion on whether the inspected or tested Work complies with the contract requirements and recommendations for remedy as applicable

k. Recommendations on re-inspection or retesting.

l. Name and signature of inspector

The Whole Building Air Leakage Test Reports, Bond Adhesion Strength Test Reports and Thermography Test Reports shall be submitted in duplicate to the Contracting Officer not later than 10 days after each inspection or test. The report shall adhere to and include the requirements specified for Test Reports and additionally as otherwise stated or referenced in the test standards or procedures.

1.8 WARRANTY

1.8.1 Material Warranty

Provide barrier membrane manufacturer's material warranty for a minimum of three years from date of beneficial occupancy. Warranty shall provide for the replacement of any materials that fail to cure or that deteriorate to the point of no longer meeting the specified requirements.

1.8.2 Contractor Warranty

Provide a minimum two year contractor materials and workmanship warranty from the date of beneficial occupancy. Warranty shall include all components of the air and vapor barrier system assembly. Failure of airtight seal, failure of watertight seal, loss of adhesion, loss of cohesion, failure to cure, or other failures of materials or installation workmanship such that the barrier system no longer meets the specified requirements shall be corrected by the contractor at no additional cost to the Government, including all costs of removals and repair work necessary to return the construction to the original construction requirements.

PART 2 PRODUCTS

2.1 MATERIALS

Provide the type of air and vapor barrier material and related primers, adhesives, mastics, tapes, sealants, and other accessories as specified and necessary for a complete air and vapor barrier system assembly. Ensure compatibility of the materials within a specific barrier membrane type, with each other, and with the materials to which they will be applied. Materials shall conform to the specified Performance Requirements and materials properties specified when tested in accordance with the referenced standards.

Wall air and vapor barrier materials are specified below. Roof and under slab air and vapor barrier materials are specified in their related specification sections.

Submit to the Contracting Officer the following items as detailed in the Submittals Article:

a. Shop drawings

b. Design data

c. Manufacturer's certification of materials compatibility

d. Manufacturer's instructions

e. Material safety data sheets (MSDS)

2.2 EXTERIOR WALL AIR BARRIER

The air barrier system in the exterior walls is two part:

1. Permeable Air Barrier / Moisture Barrier applied to outside face of exterior gypsum sheathing in air cavity of exterior walls: spunbonded polyolefin, non-woven, non-perforated fabric.

a. Air Penetration: <.004 cfm/ft2 at 1.57 psf, when tested in accordance with ASTM E2178. Type I per ASTM E1677.

b. Water vapor permeance: 56 perms at 25 mils (dry) when tested in accordance with ASTM E96/E96M-05, Method A

c. Surface Burning Characteristics: Class A, when tested in accordance with ASTM E84. Flame Spread: 15, Smoke Developed: 15

2. Impermeable Air Barrier Liner Fabric applied to inside face of exterior pre-engineered metal building walls: Provide woven, reinforced, high-density polyethylene complying with ASTM C1136. Perm rating: 0.02 as per ASTM E96/E96M. Product shall comply with ASTM E2178 for air permeance. Flame/Smoke: 25/50 in accordance with ASTM E84. Fabric Seams: factory performed triple extrusion welded. Color: white.
See Section 13 34 19 pre-engineered metal building insulation system.

2.3 Fluid Applied Air Barrier

Apply fluid applied air barrier at that area of the existing brick veneer that will be concealed by the Connection Lobby.

Fluid Applied Air Barrier

2.4 COMPOSITE, SELF-ADHERING MEMBRANE BARRIER SHEETING

Self-adhereing air barrier sheeting shall be empolyed to close seams, open gaps at perimeter of doors, windows and louvers, and to close seal all penetrations thru the exterior wall: self-adhering membrane composed of flexible facing material coated completely and uniformly on one side with adhesive material, formed into uniform flexible sheets, and with disposable release liner that is removed prior to application or membrane that adheres upon application of heat to the membrane surface. Provide sample of composite, self-adhering membrane barrier sheeting to Contracting Officer for approval. Materials shall meet the requirements indicated:

a. Thickness, ASTM D3767, 40 mils minimum;

b. Tensile Strength, ASTM D412, Die C: 250 psi minimum;

c. Ultimate Elongation, ASTM D412, Die C: 200 percent minimum;

d. Puncture Resistance, ASTM E154/E154M: 40 lb. minimum;

e. Lap Adhesion at Minimum Application Temperature, ASTM D1876 Modified:

4.0 lbs/in. width.

2.5 ROOF AIR BARRIER

See discription at 13 34 19 METAL BUILDING SYSTEMS, Part 2, Roof Insualtion System, Barrier Liner Fabric - Air Barrier.

2.6 UNDER-SLAB VAPOR RETARDER

Polyethylene sheeting, seams taped; see description at 03 30 00 Cast-In-Place Concrete.

2.7 ACCESSORY MATERIALS

2.7.1 Primers, Adhesives and Mastics

As required and recommended by the air and vapor barrier membrane manufacturer.

2.7.2 Sealants and Tapes

As required and recommended by the air and vapor barrier membrane manufacturer and capable of accommodating inherent movement while maintaining required performance, attachment, and seal to the connected components.

2.7.3 Counterflashing Stripping

Modified bituminous, minimum 30 mil thick, self-adhering sheet, ASTM D1970/D1970M, of rubberized asphalt laminate to a 10 mil thick, crosslaminated polyethylene film with release liner backing. Provide for counterflashing seal of metal flashings.

2.7.4 Elastomeric Flashing Sheet

Neoprene or EPDM membrane, ASTM D2000, 2BC415 to 3BC620, minimum 40 mil, cured sheet neoprene with manufacturer's recommended contact adhesives and lap sealant with stainless-steel termination bars and fasteners.

2.7.5 Foam Sealant

One or two-component, foamed-in-place, polyurethane foam sealant; flame spread index of 25 or less in accordance with ASTM E162, with primer and noncorrosive substrate cleaner recommended by foam sealant manufacturer.

PART 3 EXECUTION

3.1 VERIFICATION OF CONDITIONS

Before starting the work, verify that substrate surfaces are in satisfactory condition. Notify the Contracting Officer of defects or conditions that will prevent a satisfactory application. Do not start application until defects and conditions have been corrected.

3.2 EXAMINATION

Ensure that the following conditions are met:

a. Surfaces are sound, dry, even, and free of oil, grease, dirt, excess

mortar or other contaminants that may affect application of air and vapor barrier materials.

b. Concrete surfaces are cured and dry, smooth without large voids, spalled areas or sharp protrusions.

c. Masonry joints are flush, and all excess mortar sitting on masonry ties has been removed.

d. Verify substrate is visibly dry and free of moisture.

e. Verify sealants used in sheathing are compatible with membrane proposed for use. Perform field peel-adhesion test on materials to which sealants are adhered.

f. Notify the Contracting Officer in writing of anticipated problems or issues with the substrates prior to proceeding.

3.3 PREPARATION

Coordinate work with that of other trades to ensure that components to be incorporated into the barrier system are available when needed. Inspect and approve surfaces immediately before application of barrier system materials. Clean, prepare, and treat substrate according to manufacturer's written instructions. Provide clean, dust-free, and dry substrate, unless otherwise recommended by the barrier manufacturer's appliction instructions. Remove laitance, loose aggregate, sharp projections, grease, oil, dirt, curing compounds, and other contaminants which could adversely affect the complete bonding of the barrier membrane materials to substrate surface.

3.3.1 Penetrations and Projections

Seal penetrations in accordance with barrier system manufacturer's requirements before application of air and vapor barrier system.

3.3.2 Cracks and Joints

Prepare visible cracks and joints in substrate to receive barrier membrane in accordance with the membrane manufacturer's requirements. Joints shall be prepared and sealed with flexible materials to accommodate joint movement.

3.3.3 Priming

Prime surfaces to receive barrier membrane materials as required by the material manufacturer's printed instructions.

3.3.4 Protection from Spray Applied Materials

Mask and cover adjacent areas to protect from over spray. Ensure any required foam stop or back up material are in place to prevent over spray and achieve complete seal. Seal off existing ventilation equipment. Install temporary ducting and fans as necessary to remove required operational exhaust fumes. Provide for make-up air. Erect barriers, isolate area and post warning signs to advise non-protected personnel to avoid the spray area.

3.3.5 Materials Integrity

Protect materials during transport and application. Do not dilute primers and other materials, unless specifically recommended by materials manufacturer. Keep containers closed except when removing contents. Do not mix remains of unlike materials. Thoroughly remove residual materials before using application equipment for mixing and transporting materials. Do not permit equipment on the project site that has residue of materials used on previous projects. Use cleaners only for cleaning, not for thinning primers or membrane materials.

3.4 APPLICATION

Follow manufacturer's printed installation instructions and additional requirements specified.

3.4.1 Transition Materials

Install transition materials to provide continuity throughout the building envelope. Install materials in accordance with manufacturer's recommendations and the following:

a. Apply primer for transition strips at rate recommended by manufacturer. Allow primer to dry completely before transition strip application. Apply as many coats as necessary for proper adhesion.

b. Position subsequent sheets of transition strips applied above so that membrane overlaps the membrane sheet below by a minimum of 2 inches, unless greater overlap is recommended by manufacturer. Roll into place with roller.

c. Overlap horizontally adjacent pieces of transition strips a minimum of 2 inches, unless greater overlap is recommended by manufacturer. Roll seams with roller.

d. Seal around all penetrations with a transition material or other procedure in accordance with manufacturer's recommendations.

e. Seal the barrier membrane in exterior wall assembly continuously to the barrier conditions of the roof, to concrete below-grade structures, to windows, curtain wall, storefront, louvers, exterior doors, penetrations, and other intersection conditions using transition membranes and sealants and in accordance with the manufacturer's recommendations.

f. At changes in substrate plane, provide transition material recommended by manufacturer to make a smooth transition from one plane to another.

g. Provide mechanically fastened non-corrosive metal sheet to span gaps in substrate plane and to make a smooth transition from one plane to the other. Barrier membrane shall be continuously supported by substrate.

h. At through-wall flashings, provide an additional 6 inch wide strip of manufacturer's recommended membrane counterflashing to seal top of through-wall flashing to membrane. Seal exposed top edge of strip with bead of mastic as recommended by manufacturer.

i. At deflection and control joints, provide backup for the barrier membrane to accommodate anticipated movement.

j. At expansion and seismic joints provide transition to the joint assemblies.

k. Do not allow materials to come in contact with chemically incompatible materials.

l. Do not expose transition membrane to sunlight longer than as recommended by the manufacturer.

m. Inspect installation prior to enclosing transition areas and repair damaged areas with like materials as recommended by manufacturer.

3.4.2 Fluid-Applied Membrane Barrier

Over primed surfaces, provide a uniform, wet, monolithic coating of fluid-applied membrane in accordance with the manufacturer's printed instructions to provide for the at the required dry film thickness (DFT). Apply material by trowel, squeegee, roller, brush, spray apparatus, or other method recommended by membrane material manufacturer. Check wet film thickness as specified in paragraph entitled "Film Thickness" and adjust application rate as necessary to provide a uniform coating of the thickness specified. Where possible, mark off surface to be coated in equal units to facilitate proper coverage. At expansion joints, control joints, prepared cracks, flashing, and terminations, carry membrane material over the prepared condition in the required uniform thickness to provide a monolithic coating and tie-in to the accessory seal material. If membrane cures before next application, clean previously applied membrane in a manner recommended by the membrane material manufacturer to remove dirt, dust, and other contaminents that could inhibit adhesion of overlapping membrane coat.

3.4.2.1 Film Thickness

Measure wet film thickness every 500 square feet during application by placing flat metal plates on the substrate or using a mil-thickness gage especially manufactured for the purpose.

3.4.3 Composite, Self-Adhering Membrane Barrier Sheeting

Apply composite, self-adhering membrane on surfaces primed at a uniform coverage rate in accordance with membrane manufacturer's printed instructions. Avoid wrinkles and buckles in applying membrane and joint reinforcement. Lap sheets at edges and ends a minimum of 2-1/2 inches over the preceding sheet. All side laps shall be minimum 2-1/2 inches and end laps shall be 5 inches. Laps shall be made shingle fashion to shed water in the direction fo flow. Laps shall be self adhesive or mastic in accordance with the manufacturer's recommendation. Roll or firmly press to adhere membrane to substrate and firmly seal laps. Cover corners and joints with two layers of reinforcement by first applying a 12 inch width of membrane centered along the axis. Flash projections with a second ply of membrane extending for a distance of not less than 6 inches from the projection. Finish exposed, terminated edges of membrane on horizontal surfaces with a trowelled bead of mastic. Finish vertical joints similary when required by the membrane manufacturer's printed instructions or recommendations.

3.5 PROTECTION

Protection and repair is the Contactor's responsibility regardless of the assignment of responsibility for inspection, testing or sample taking and similar services. Protect air and vapor barrier assemblies from damage during application and remainder of construction period. Coordinate with installation of materials which cover the barrier, to ensure exposure period does not exceed that recommended by the barrier manufacturer. Clean spillage and soiling from adjacent construction using cleaning agents and procedures recommended by manufacturer of affected construction and acceptable to the primary barrier material manufacturer. Repair damaged construction, or construction impacted by destructive or other testing and sampling, in a manner to meet specified requirements.

3.6 CORRECTION OF DEFICIENCIES

Where any form of deficiency is found, additional measures shall be taken as deemed necessary by the Contracting Officer to determine the extent of the deficiency. Corrective action shall be performed as recommended by the barrier membrane material manufacturer in a manner that complies with the full performance requirements specified and as approved by the Contracting Officer.

3.7 FIELD QUALITY CONTROL

3.7.1 Inspection and Construction Monitoring

Inspect the work to ensure compliance with specified requirements adn provide daily inspection report during the air and vapor barrier installation activity. Verfy the following:

a. Materials comply with the specified requirements.

b. Materials are not installed in adverse weather conditions nor temperatures beyond the application range specified or recommended by the barrier membrane manfuacturer.

c. All materials are properly stored, handled and protected from damage.

d. Application equipment is in working order. Metering devices are accurate.

e. Substrates are in acceptable condition, primed as appropriate, and in compliance with specification prior to application of subsequent materials.

f. Installer adheres to specified and detailed application parameters.

g. Ensure proper transitions for change in direction and structural support at gaps.

h. Ensure continuity of the air and vapor barrier system throughout the building enclosure and that all gaps are covered, the covering is structurally sound, and all penetrations are sealed.

i. Ensure structural support of the barrier system to withstand design air pressures.

j. Ensure masonry and concrete substrate surfaces are smooth, clean, and free of voids, protrusions and mortar droppings, with mortar joints struck flush.

k. Ensure laps in sheet materials are at least a 2-inch minimum, shingled in the correct direction to shed water.

l. Ensure that a roller has been used to enhance adhesion of adhered sheet membrane materials.

m. Ensure proper connection between assemblies (membrane and sealants) for cleaning, preparation and priming of surfaces, structural support, integrity and continuity of seal.

n. Measure application thickness of liquid applied materials to manufacturer's requirements for the specific substrate.

o. Temporary protection measures are in place at the end of each work shift.

3.8 PERFORMANCE VERIFICATION TESTING

3.8.1 Whole Building Air Leakage Test

A whole building air leakage test shall follow the guidance in the USACE-ALTP Air Leakage Test Protocol for Measuring Air Leakage in Buildings. This protocol is available on the Whole Building Design Guide website- http://www.wbdg.org/pdfs/usace_airleakagetestprotocol.pdf The fan pressurization test to determine final compliance with the airtightness requirement shall be conducted when all components of the air barrier system have been installed and inspected, and have passed any intermediate testing procedures as detailed in the construction drawings and specifications. The test may be conducted before finishes that are not part of the air barrier system have been installed. For example, if suspended ceiling tile, interior gypsum board, or cladding systems are not part of the air barrier system, the test may be conducted before they are installed.

3.8.1.1 Test Requirements

The whole building air leakage test must be performed in accordance with ASTM E779 with the following additions and exceptions:

The test consists of measuring the flow rates required to establish a minimum of 12 positive and 12 negative building pressures. The lowest test pressure shall be 0.50 psf (25 Pa); the highest test pressure shall be 1.57 psf (75 Pa); and there must be at least 0.50 psf (25 Pa) difference between the lowest and highest test pressures.

The test pressure must be measured in a representative location such that pressures in the extremities of the enclosure can be shown to not exceed 10 percent of the measured test pressure. At least 12 bias pressure readings must be taken across the envelope and averaged over at least 20 seconds each before and after the flow rate measurements. None of the bias pressure readings must exceed 30 percent of the minimum test pressure when testing in both directions.

Where it can be shown that it is impossible to test in both directions, then the building may be tested in the positive direction only, provided the bias pressure does not exceed 10 percent of the minimum test pressure.

The mean value of the air leakage flow rate calculated from measured data at 1.57 psf or 0.3 in wg (75 Pa) must not exceed 0.25 cfm/ft2 of envelope area with an upper confidence limit as defined by ASTM E779 not exceeding 0.27 cfm/ft2 based upon a confidence interval of ±0.02 cfm/ft2; should the confidence interval exceed ±0.02 cfm/ft2 the upper confidence limit may not exceed 0.25 cfm/ft2 (75 Pa). Measurements must be referenced at standard conditions of 14.70 psi (101.33 KPa) and 68F (20C). The envelope area is to be supplied and/or confirmed by the Designer of Record (DOR).

The test shall be conducted with ventilation fans and exhaust fans turned off and the outdoor air inlets and exhaust outlets sealed (by dampers or masking). The contractor must provide a responsible HVAC technician with the authority to place the HVAC system in the correct mode for the pressure test. The test technician must have unhindered access to mechanical rooms, air handlers, exhaust fans, and outdoor air and exhaust dampers.

The contractor must ensure that all windows in the enclosure are kept closed. Entry and exit through doors in the test enclosure must be prohibited during the test. Data collected while the pressures and flows are affected by a door opening and closing shall be discarded.

The testing agency is required to perform a diagnostic evaluation in accordance with ASTM E1186, whether the building achieves the air tightness requirement or not. The diagnostic evaluation will assist the contractor and responsible parties in identifying and eliminating air leakage so the building meets the requirement upon retesting. The testing results will also be expressed in terms of the Equivalent Leakage Area (EqLA) at 1.57 psf (75 Pa). The EqLA is a the equivalent area of a flat plate that leaks the same amount as the building envelope at 1.57 psf (75 Pa).

3.8.2 Thermography Test

The building envelope shall be tested using Infrared Thermography technology. The thermography testing shall be completed in accordance with the requirements of ASTM C1060, ASTM E1186, and ISO 6781. The Contracting Officer shall witness the testing. Testing shall occur just before the building airtightness test. Testing shall also occur during the airtightness test so that areas of building air leaks are detected. If the building air tightess test is failed, Thermographic testing shall be repeated just before and during subsequent airtightness tests until the airtightness test is successful. The contractor shall provide a report. The report shall include thermographs in color and a color temperature scale to define the temperature indicated by the various colors. The report shall identify the high temperature reading, the outdoor air temperature, the building indoor air temperature, and the wind speed and direction. The report shall note any areas of compromise in the building envelope, and shall note all actions required and taken to correct those areas. Final thermography test report shall demonstrate the problem areas have been corrected. The complete test and analysis will be submitted to the Government for review and approval.

3.8.3 Bond Adhesion Strength Test

Test for bond adhesion pull-off strength of fluid-applied or sheet-applied barrier membrane in accordance with ASTM D4541. Minimum acceptable bond adhesion pull-off strength shall be as stated in the barrier membrane

manufacturer's product data for the substrate to which applied. In the absence of manufacturer's data the minimum bond strength shall be the minimum specified. Test bond strength after the adhesive bond set time recommended by the barrier membrane manufacturer. Bond strength shall be tested on each day's application and as follows: a minimum of one bond adhesion test shall be performed on each wall section length of less than 100 feet; two bond adhesion tests for wall section lengths of 100 to 200 feet in length; For walls sections longer than 200 feet, conduct a minimum of one bond adhesion test at 50 feet to 75 feet intervals. Location of testing shall be as selected by the Contracting Officer. Bond failure strength shall be compared to the manufacturer's indicated adhesion strength for the substrate. Failed test shall result in a second test of the application in another selected area of the same wall section. Any failures shall be investigated by the Contractor to determine the reason for failure and corrective action to remedy failures and prevent further failures shall be taken. All test areas shall be repaired by the Contractor.

3.9 INVESTIGATION OF CAUSE OF FAILED TESTS

The Contractor shall investigate the cause of failed air leakage tests. The air and vapor barrier inspector shall assist with the investigation. Procedures outlined in ASTM E1186 (infrared scanning, smoke tracer, tracer gas, etc.) shall be implemented to assist in determining the air leakage locations. Cause shall be determined and included in the report to the Contracting Officer. Repairs shall be made and testing repeated until the required airtightness is achieved.

-- End of Section --

THIS PAGE HAS BEEN INTENTIONALLY LEFT BLANK

SECTION 07 21 13

BOARD AND BLOCK INSULATION
02/16

PART 1 GENERAL

1.1 REFERENCES

The publications listed below form a part of this specification to the extent referenced. The publications are referred to within the text by the basic designation only.

ASTM INTERNATIONAL (ASTM)

ASTM C553	(2013) Standard Specification for Mineral Fiber Blanket Thermal Insulation for Commercial and Industrial Applications
ASTM C578	(2015b) Standard Specification for Rigid, Cellular Polystyrene Thermal Insulation
ASTM C612	(2014) Mineral Fiber Block and Board Thermal Insulation
ASTM C930	(2012) Potential Health and Safety Concerns Associated with Thermal Insulation Materials and Accessories
ASTM D1621	(2016) Standard Test Method for Compressive Properties of Rigid Cellular Plastics
ASTM D3833/D3833M	(1996; R 2011) Water Vapor Transmission of Pressure-Sensitive Tapes
ASTM E84	(2016) Standard Test Method for Surface Burning Characteristics of Building Materials
ASTM E96/E96M	(2016) Standard Test Methods for Water Vapor Transmission of Materials

INTERNATIONAL CODE COUNCIL (ICC)

ICC IBC	(2015) International Building Code

NATIONAL FIRE PROTECTION ASSOCIATION (NFPA)

NFPA 211	(2016) Standard for Chimneys, Fireplaces, Vents, and Solid Fuel-Burning Appliances
NFPA 31	(2016) Standard for the Installation of Oil-Burning Equipment
NFPA 54	(2015) National Fuel Gas Code
NFPA 70	(2017) National Electrical Code

U.S. NATIONAL ARCHIVES AND RECORDS ADMINISTRATION (NARA)

29 CFR 1910.134 Respiratory Protection

1.2 SUBMITTALS

Government approval is required for submittals with a "G" designation; submittals not having a "G" designation are for Contractor Quality Control approval. Submit the following in accordance with Section 01 33 00 SUBMITTAL PROCEDURES:

SD-03 Product Data

Manufacturer's Standard Details; G

Board Insulation; G

Pressure Sensitive Tape; G

Protection Board or Coatings; G

Accessories including sealants and tape; G

SD-07 Certificates

Board Insulation; G

Protection Board or Coating; G

Warranties; G

SD-08 Manufacturer's Instructions

Board Insulation

Adhesive

1.3 MANUFACTURER'S DETAILS

Submit manufacturer's standard details indicating methods of attachment and spacing, transition and termination details, and installation details. Include verification of existing conditions.

1.4 PRODUCT DATA

Include data for material descriptions, recommendations for product shelf life, requirements for protection board or coatings, and precautions for flammability and toxicity. Include data to verify compatibility of sealants with insulation.

1.5 DELIVERY, STORAGE, AND HANDLING

1.5.1 Delivery

Deliver materials to the site in original sealed wrapping bearing manufacturer's name and brand designation, specification number, type,

grade, R-value, and class. Store and handle to protect from damage. Do not allow insulation materials to become wet, soiled, crushed, or covered with ice or snow. Comply with manufacturer's recommendations for handling, storing, and protecting of materials before and during installation.

1.5.2 Storage

Inspect materials delivered to the site for damage and store out of weather in manufacturer's original packaging. Store only in dry locations, not subject to open flames or sparks, and easily accessible for inspection and handling. Keep materials wrapped and separated from off-gassing materials (such as drying paints and adhesives). Do not use materials that have visible moisture or biological growth. Comply with manufacturer's recommendations for handling, storage, and protection of materials before and during installation.

1.6 SAFETY PRECAUTIONS

1.6.1 Respirators

Provide installers with dust/mist respirators, training in their use, and protective clothing, all approved by the National Institute for Occupational Safety and Health (NIOSH)/Mine Safety and Health Administration (MSHA) and in accordance with 29 CFR 1910.134.

1.6.2 Other Safety Considerations

Comply with the safety requirements of ASTM C930.

1.7 WARRANTIES

1.7.1 Warranties

Provide manufacturer's material warranty for all system components for a period of three years from the date of Beneficial Occupancy. Submit draft and final warranties in accordance with Sections 01 78 00 CLOSEOUT SUBMITTALS and 01 78 23 OPERATION AND MAINTENANCE DATA.

PART 2 PRODUCTS

2.1 PRODUCT SUSTAINABILITY CRITERIA

Where allowed by performance criteria:

2.2 BOARD INSULATION

Provide thermal insulating materials as recommended by manufacturer for each type of application indicated. Provide insulation with the following physical properties and in accordance with the following standards:

a. Extruded Preformed Cellular Polystyrene: ASTM C578 REV A

b. Mineral Fiber Block and Board: ASTM C612

2.2.1 Thermal Resistance

Unless otherwise indicated, underslab insulaton, R-6 per one inch thickness of board.

2.2.2 Fire Protection Requirements

a. Flame spread index of 75 or less when tested in accordance with ASTM E84.

b. Smoke developed index of 150 or less when tested in accordance with ASTM E84.

c. Provide insulated assemblies in accordance ICC IBC Chapter Fire and Smoke Protection Features.

2.2.3 Other Material Properties

Provide thermal insulating materials with the following properties:

a. Rigid cellular plastics: Compressive Resistance at Yield: Not less than 10 pounds per square inch (psi) when measured according to ASTM D1621.

b. Water Vapor Permeance: Not more than 1.1 Perms or less when measured according to ASTM E96/E96M, desiccant method, in the thickness required to provide the specified thermal resistance, including facings, if any.

c. Water Adsorption: Not more than 1 percent by volume when measured in accordance with paragraph 14 of ASTM C553.

2.2.4 Recycled Materials

Provide thermal insulation containing recycled materials to the extent practicable, provided that the material meets all other requirements of this section. The minimum required recycled material contents (by weight, not volume) are:

Polyisocyanurate/Polyurethane:	9 percent
Phenolic Rigid Foam:	5 percent
Perlite Board:	75 percent post consumer paper

2.2.5 Prohibited Materials

Do not provide materials containing asbestos.

2.3 VAPOR BARRIER

2.3.1 Vapor Barrier in Framed Walls and Roofs

a. See section 07 15 00.00 22 Air and Vapor Barriers

2.3.2 Vapor Retarder under Floor Slab

a. For information about the vapor barrier under the floor slab see Section 03 30 00 CAST-IN-PLACE CONCRETE.

2.4 PRESSURE SENSITIVE TAPE

As recommended by manufacturer of vapor retarder(s). Match water vapor permeance rating for each vapor retarder specified. Provide tape in accordance with ASTM D3833/D3833M.

2.5 PROTECTION BOARD OR COATING

As recommended by insulation manufacturer.

2.6 ACCESSORIES

2.6.1 Adhesive

As recommended by insulation manufacturer.

2.6.2 Mechanical Fasteners

Corrosion resistant fasteners as recommended by the insulation manufacturer.

PART 3 EXECUTION

3.1 EXISTING CONDITIONS

Prior to installation, ensure all areas that are in contact with the insulation are dry and free of projections that could cause voids, compressed insulation, or punctured vapor retarders. For foundation perimeter or under slab applications, check that subsurface fill is flat, smooth, dry, and well tamped. Do not proceed with installation if moisture or other conditions are present, and notify the Contracting Officer of such conditions. Do not proceed with the work until conditions have been corrected and verified to be dry.

3.2 PREPARATION

3.2.1 Blocking Around Heat Producing Devices

Provide noncombustible blocking at all spaces between heat producing devices and the floors, ceilings and roofs through which they pass. Provide in accordance with ICC IBC Section 2111.12 Fireplace Blocking and with the following clearances:

a. Recessed lighting fixtures, including wiring compartments, ballasts, and other heat producing devices, unless certified for installation surrounded by insulation: 3 inches from outside face of fixtures and devices or as required by NFPA 70 and, if insulation is placed above fixture or device, 24 inches above fixture.

b. Masonry chimneys or masonry enclosing a flue: 2 inches from outside face of masonry. Masonry chimneys for medium and high heat operating appliances: Minimum clearances required by NFPA 211.

c. Vents and vent connectors used for venting products of combustion, flues, and chimneys other than masonry chimneys: Minimum clearances as required by NFPA 211.

d. Gas Fired Appliances: Clearances as required in NFPA 54.

e. Oil Fired Appliances: Clearances as required in NFPA 31.

Blocking is not required if chimneys or flues are certified in writing by the chimney or flue manufacturer for use in contact with specific insulating materials.

3.3 INSTALLATION

3.3.1 Installation and Handling

Provide insulation in accordance with the manufacturer's printed installation instructions. Keep material dry and free of extraneous materials.

3.3.2 Electrical Wiring

Do not install insulation in a manner that would enclose electrical wiring between two layers of insulation.

3.3.3 Cold Climate Requirement

Place insulation on the outside of water pipes in exterior walls.

3.3.4 Continuity of Insulation

Butt tightly against adjoining boards, studs, rafters, joists, sill plates, headers and obstructions. Provide continuity and integrity of insulation at corners, wall to ceiling joint, roof, and floor. Avoid creating thermal bridges and voids. Provide and verify continuity of insulative barrier throughout the building enclosure.

3.3.5 Coordination

Verify final installed insulation thicknesses comply with thicknesses indicated, R-values specified herein, and with the approved insulation submittal(s).

3.4 INSTALLATION ON WALLS

3.4.1 Installation using Furring Strips

Install insulation between members as recommended by insulation manufacturer.

3.4.2 Protection Board or Coating

Install protection board or coating in accordance with manufacturer's printed instructions. Install protection over all exterior exposed insulation and to 1 foot below grade.

3.5 PERIMETER AND UNDER SLAB INSULATION

Install perimeter thermal insulation where heated spaces are adjacent to exterior walls, slab edges in slab-on-grade, or floating slab construction.

3.5.1 Manufacturer's Instructions

Layout insulation, tape edges, provide vapor retarder and other required

accessories to protection against vermin, insects, and damage in accordance with manufacturer's printed instructions.

3.5.2 Insulation on Vertical Surfaces

Provide thermal insulation on exterior of foundation walls below grade and on edges of slabs-on-grade. Fasten insulation with adhesive or mechanical fasteners.

3.5.3 Insulation Under Slab

Provide insulation horizontally under slab on grade at the perimeter of the building as indicated in the drawings. Turn insulation up at outside edge of slab as indicated in the drawings. Install insulation on top of vapor retarder and turn retarder up over the outside edge of insulation to top of slab.

3.5.4 Protection of Insulation

Protect insulation from damage during construction and back filling by application of protection board or a coating. Do not leave installed vertical insulation unprotected overnight. Protect installed insulation from weather, including rain and ultraviolet light, from mechanical abuse, compression, and dislocation. Install protection over entire exposed exterior insulation board. Extend protection at least 1 foot below grade.

3.6 VAPOR RETARDER

See section 07 15 00.00 22 Air and Vapor Barriers.

3.7 ACCESS PANELS AND DOORS

Attach insulation to all access panels greater than 1 square foot and all access doors in insulated floors and ceilings. Use insulation with same R-Value as that for the floor or ceiling in which each panel occurs.

-- End of Section --

THIS PAGE HAS BEEN INTENTIONALLY LEFT BLANK

SECTION 07 42 13

METAL WALL PANELS
05/11

PART 1 GENERAL

1.1 REFERENCES

The publications listed below form a part of this specification to the extent referenced. The publications are referred to within the text by the basic designation only.

AMERICAN ARCHITECTURAL MANUFACTURERS ASSOCIATION (AAMA)

AAMA 501.1	(2005) Standard Test Method for Water Penetration of Windows, Curtain Walls and Doors Using Dynamic Pressure
AAMA 800	(2010) Voluntary Specifications and Test Methods for Sealants

AMERICAN INSTITUTE OF STEEL CONSTRUCTION (AISC)

AISC 341	(2016) Seismic Provisions for Structural Steel Buildings

AMERICAN IRON AND STEEL INSTITUTE (AISI)

AISI S100	(2012) North American Specification for the Design of Cold-Formed Steel Structural Members
AISI SG03-3	(2002; Suppl 2001-2004; R 2008) Cold-Formed Steel Design Manual Set

AMERICAN SOCIETY OF CIVIL ENGINEERS (ASCE)

ASCE 7	(2010; Errata 2011; Supp 1 2013) Minimum Design Loads for Buildings and Other Structures

ASTM INTERNATIONAL (ASTM)

ASTM A1008/A1008M	(2016) Standard Specification for Steel, Sheet, Cold-Rolled, Carbon, Structural, High-Strength Low-Alloy and High-Strength Low-Alloy with Improved Formability, Solution Hardened, and Bake Hardened
ASTM A123/A123M	(2017) Standard Specification for Zinc (Hot-Dip Galvanized) Coatings on Iron and Steel Products
ASTM A36/A36M	(2014) Standard Specification for Carbon Structural Steel
ASTM A463/A463M	(2010; R 2015) Standard Specification for

	Steel Sheet, Aluminum-Coated, by the Hot-Dip Process
ASTM A606/A606M	(2009a) Standard Specification for Steel Sheet and Strip, High-Strength, Low-Alloy, Hot-Rolled and Cold-Rolled, with Improved Atmospheric Corrosion Resistance
ASTM A653/A653M	(2015; E 2016) Standard Specification for Steel Sheet, Zinc-Coated (Galvanized) or Zinc-Iron Alloy-Coated (Galvannealed) by the Hot-Dip Process
ASTM A755/A755M	(2016; E 2016) Standard Specification for Steel Sheet, Metallic Coated by the Hot-Dip Process and Prepainted by the Coil-Coating Process for Exterior Exposed Building Products
ASTM A780/A780M	(2009; R 2015) Standard Practice for Repair of Damaged and Uncoated Areas of Hot-Dip Galvanized Coatings
ASTM A792/A792M	(2010) Standard Specification for Steel Sheet, 55% Aluminum-Zinc Alloy-Coated by the Hot-Dip Process
ASTM A924/A924M	(2016a) Standard Specification for General Requirements for Steel Sheet, Metallic-Coated by the Hot-Dip Process
ASTM B117	(2016) Standard Practice for Operating Salt Spray (Fog) Apparatus
ASTM C920	(2014a) Standard Specification for Elastomeric Joint Sealants
ASTM D1056	(2014) Standard Specification for Flexible Cellular Materials - Sponge or Expanded Rubber
ASTM D1308	(2013) Effect of Household Chemicals on Clear and Pigmented Organic Finishes
ASTM D1654	(2008) Evaluation of Painted or Coated Specimens Subjected to Corrosive Environments
ASTM D1667	(2005; R 2011) Flexible Cellular Materials - Poly (Vinyl Chloride) Foam (Closed-Cell)
ASTM D2244	(2016) Standard Practice for Calculation of Color Tolerances and Color Differences from Instrumentally Measured Color Coordinates
ASTM D2247	(2015) Testing Water Resistance of Coatings in 100% Relative Humidity

ASTM D2794	(1993; R 2010) Resistance of Organic Coatings to the Effects of Rapid Deformation (Impact)
ASTM D3359	(2009; E 2010; R 2010) Measuring Adhesion by Tape Test
ASTM D3363	(2005; E 2011; R 2011; E 2012) Film Hardness by Pencil Test
ASTM D4214	(2007; R 2015) Standard Test Method for Evaluating the Degree of Chalking of Exterior Paint Films
ASTM D4587	(2011) Standard Practice for Fluorescent UV-Condensation Exposures of Paint and Related Coatings
ASTM D522/D522M	(2014) Mandrel Bend Test of Attached Organic Coatings
ASTM D523	(2014) Standard Test Method for Specular Gloss
ASTM D5894	(2016) Standard Practice for Cyclic Salt Fog/UV Exposure of Painted Metal, (Alternating Exposures in a Fog/Dry Cabinet and a UV/Condensation Cabinet)
ASTM D610	(2008; R 2012) Evaluating Degree of Rusting on Painted Steel Surfaces
ASTM D714	(2002; R 2009) Evaluating Degree of Blistering of Paints
ASTM D822	(2013) Filtered Open-Flame Carbon-Arc Exposures of Paint and Related Coatings
ASTM D968	(2015) Abrasion Resistance of Organic Coatings by Falling Abrasive
ASTM E1592	(2005; R 2012) Structural Performance of Sheet Metal Roof and Siding Systems by Uniform Static Air Pressure Difference
ASTM E283	(2004; R 2012) Determining the Rate of Air Leakage Through Exterior Windows, Curtain Walls, and Doors Under Specified Pressure Differences Across the Specimen
ASTM E331	(2000; R 2016) Standard Test Method for Water Penetration of Exterior Windows, Skylights, Doors, and Curtain Walls by Uniform Static Air Pressure Difference
ASTM E72	(2015) Conducting Strength Tests of Panels for Building Construction
ASTM E84	(2016) Standard Test Method for Surface

	Burning Characteristics of Building Materials
ASTM G152	(2013) Operating Open Flame Carbon Arc Light Apparatus for Exposure of Nonmetallic Materials
ASTM G153	(2013) Operating Enclosed Carbon Arc Light Apparatus for Exposure of Nonmetallic Materials

METAL BUILDING MANUFACTURERS ASSOCIATION (MBMA)

MBMA MBSM	(2002) Metal Building Systems Manual

NATIONAL ASSOCIATION OF ARCHITECTURAL METAL MANUFACTURERS (NAAMM)

NAAMM AMP 500	(2006) Metal Finishes Manual

SHEET METAL AND AIR CONDITIONING CONTRACTORS' NATIONAL ASSOCIATION (SMACNA)

SMACNA 1793	(2012) Architectural Sheet Metal Manual, 7th Edition

UNDERWRITERS LABORATORIES (UL)

UL Bld Mat Dir	(2012) Building Materials Directory

1.2 DEFINITIONS

Metal Wall Panel: Metal wall panels, attachment system components and accessories necessary for a complete weather-tight wall system.

1.3 DESCRIPTION OF WALL PANEL SYSTEM

Different types of metal wall panels are requred for this project:
a. P1481 requires a standard PEMB vertical panel
b. P1482 requires a flush panel to match existing metal panels on the existing adjacent buildings.
Factory color finished, metal wall panel system with concealed fastening attachment. Panel profile to match existing adjacent buildings; in the case of P1481 match exisiting panels on similar buildings.

1.3.1 Metal Wall Panel General Performance

Comply with performance requirements, conforming to AISI S100, without failure due to defective manufacture, fabrication, installation, or other defects in construction. Wall panels and accessory components must conform to the following standards:

ASTM A1008/A1008M
ASTM A123/A123M
ASTM A36/A36M
ASTM A653/A653M
ASTM A463/A463M for aluminum coated steel sheet
ASTM A606/A606M
ASTM A755/A755M for metallic coated steel sheet for exterior coil pre-painted applications.

ASTM A780/A780M for repair of damage or uncoated areas of hot-dipped galvanized coating.
ASTM A924/A924M for metallic coated steel sheet
ASTM D522/D522M for applied coatings
UL Bld Mat Dir

1.3.2 Structural Performance

Maximum calculated fiber stress must not exceed the allowable value in the AISI or AA manuals; a one third overstress for wind is allowed. Midspan deflection under maximum design loads is limited to L/180. Contract drawings show the design wind loads and the extent and general assembly details of the metal siding. Contractor must provide design for members and connections not shown on the drawings. Siding panels and accessories must be the products of the same manufacturer.

Provide metal wall panel assemblies complying with the load and stress requirements in accordance with ASTM E1592. Wind Load force due to wind action governs the design for panels.

Wall systems and attachments are to resist the wind loads as determined by ASTM E72 and ASCE 7 in the geographic area where the construction will take place, in pounds per square foot. Submit five copies of wind load tests to the Contracting Officer.

Provide metal wall panel assembly for seismic conditions complying with the applicable requirements of AISC 341.

1.3.3 Air Infiltration

Air leakage must conform to the limits through the wall assembly area when tested according to ASTM E283.

1.3.4 Water Penetration Under Static Pressure

No water penetration when tested according to ASTM E331.

1.3.5 Water Penetration Under Dynamic Pressure

No evidence of water leakage when tested according to AAMA 501.1.

1.4 SUBMITTALS

Government approval is required for submittals with a "G" designation; submittals not having a "G" designation are for Contractor Quality Control approval. Submit the following in accordance with Section 01 33 00 SUBMITTAL PROCEDURES:

SD-01 Preconstruction Submittals

Submit Documentation for the following items:

Qualification of Manufacturer; G
Qualification of Installation Contractor; G

Sample Warranty; G

SD-02 Shop Drawings

Installation Drawings; G

SD-03 Product Data

Recycled Content;

Submit Manufacturer's data indicating percentage of recycle material in wall panels to verify sustainable acquisition compliance.

Submit Manufacturer's catalog data for the following items:

Wall Panels; G

Factory Color Finish
Closure Materials
Pressure Sensitive Tape
Sealants and Caulking
Galvanizing Repair Paint
Aluminized Steel Repair Paint
Accessories

SD-04 Samples

Submit as required each of the following samples:

Wall Panels, 12 inches long by actual panel width; G
Fasteners; G
Metal Closure Strips, 10 inches long of each type; G

Color chart and chips; G

Submit manufacturer's color charts and chips, approximately 4 by 4 inches, showing full range of colors, textures and patterns available for wall panels with factory applied finishes.

SD-05 Design Data

Wind load design analysis; G

As applicable, submit the following wind load design analysis data, to include, but not limited to:

wind speed
exposure category,co-efficient,importance factor
type of facility
negative pressures for each zone
methods and requirements of attachment

SD-06 Test Reports

Submit test reports for the following in accordance with the referenced articles in this section.

Leakage Tests; G
Wind Load Tests; G
Coating Tests; G
Chalking Tests; G

SD-07 Certificates

Submit certificates for the following items showing conformance with referenced standards contained in this section:

Coil Stock; G
Fasteners; G
Galvanizing Repair Paint; G

SD-08 Manufacturer's Instructions

Include detailed application instructions and standard manufacturer drawings altered as required by these specifications.

Installation of Wall panels;

SD-09 Manufacturer's Field Reports

Submit 5 bound copies of the Manufacturer's Field Reports; G

SD-11 Closeout Submittals

Warranty; G
Maintenance Instructions; G

20 year "No Dollar Limit" warranty for labor and material

1.5 QUALITY ASSURANCE

1.5.1 Pre-Installation Conference

Upon notification of submittal receipt and approval by the Contracting Officer; and prior to the commencement of the work, the Contractor must attend a pre-installation conference to review the following:

a. Drawings and Specifications.

b. Qualification of Installer.

c. Sustainable acquisition

d. Approved Warranty

e. Sample wall panels, 12 inches long by actual panel width

f. Sample metal closure strips, 10 inches long of each type

g. Color charts and chips

h. Coatings and base metal tests, chalking tests

i. Construction schedule, availability of materials, Installer's personnel, equipment and facilities required to progress with the work without delay.

j. Methods and procedures related to installation of wall panels, including manufacturer's written instructions. Explicitly identify in

writing, differences between manufacturer's instructions and the specified requirements.

k. Support conditions for compliance with requirements, including alignment between and attachment to structural members.

l. Flashing, special siding details, wall penetrations, openings, and condition of other construction that will affect metal wall panels.

m. Governing regulations and requirements for insurance, certificates, and tests and inspections if applicable.

n. Temporary protection requirements for metal wall panel assembly during and after installation.

o. Wall panel observation and repair procedures after metal wall panel installation. Provide detailed written instructions including copies of Material Safety Data Sheets for maintenance and repair materials, and manufacturer's maintenance instructions.

p. Methods and installation procedures of the wall air barrier; see specification section 07 15 00.00 22 Air and Vapor Barriers, and specification section 13 34 19 Metal Building Systems, paragraph entitled, Wall Insulation System.

1.5.1.1 Installation Drawings

Installation shop drawings for wall panels, flashing, accessories, and anchorage systems must indicate completely dimensioned structural frame and erection layouts, openings in the wall, special framing details, and construction details at corners, building intersections and flashing, location and type of mastic and metal filler strips.

1.5.1.2 Wind Load Design Analysis

Wind design analysis must include wall plan delineating dimensions and attachment patterns for each zone. Wind design analysis must be prepared and sealed by Licensed Project Engineer in the geographic area where the construction will take place.

1.5.2 Manufacturer's Technical Representative

The representative must have authorization from manufacturer to approve field changes and be thoroughly familiar with the products and installations in the geographical area where construction will take place.

1.5.3 Qualification of Manufacturer

Certify that metal wall panel system manufacturer has a minimum of five (5) years experience in manufacturing metal wall system and accessory products.

Manufacturer must also provide engineering services by an authorized engineer; currently licensed in the geographical area where construction will take place, having a minimum of four (4) years experience as an engineer knowledgeable in wind load design analysis, protocols and procedures per MBMA MBSM, "Metal Building Systems Manual"; ASCE 7, and ASTM E1592.

Provide certified engineering calculations, using the products submitted, for Wind load requirements in accordance with ASCE 7.

1.5.3.1 Manufacturer's Certificates

Also provide the following certifications from the manufacturer:

Coil Stock
Fasteners
Galvanizing Repair Paint

Submit certification from coil stock manufacturer or supplier that the machinery used will form the provided coil stock without warping, waviness, or rippling that is not a part of the panel profile, and without damage, abrasion or marring of the finish coating.

Provide evidence that products used within this specification are manufactured in the United States.

1.5.4 Certified Qualification of Installation Contractor

The installation contractor must be approved and certified by the metal wall panel manufacturer prior to beginning the installation of the metal wall panel system. Subcontracting by Certified Contractor for the metal wall panel work is not permitted.

1.5.5 Single Source

Obtain each type of metal wall panels, clips, closure materials and other accessories from the standard products of the single source from a single manufacturer to operate as a complete system for the intended use.

1.5.6 Manufacturer's Maintenance Instructions

Provide manufacturer's detailed written instructions including copies of Material Safety Data Sheets for maintenance and repair materials.

1.6 DELIVERY, HANDLING, AND STORAGE

Deliver and protect package components, sheets, metal wall panels, and other manufactured items to prevent damage or deformation during transportation and handling.

Unload, store, and erect metal wall panels in a manner to prevent bending, warping, twisting, and surface damage.

Stack and store metal wall panels horizontally on platforms or pallets, covered with suitable weather-tight and ventilated covering to ensure dryness, with positive slope for drainage of water. Do not store metal wall panels in contact with other materials that might cause staining, denting, or other surface damage.

Retain strippable protective covering on metal wall panel until actual installation.

1.7 PROJECT CONDITIONS

1.7.1 Field Measurements

Verify locations of wall framing and opening dimensions by field measurements before metal wall panel fabrication and indicate measurements on Shop Drawings.

1.7.2 Weather Limitations

Proceed with installation preparation only when existing and forecasted weather conditions permit Work to proceed without water entering into wall system or building.

1.8 WARRANTY

Warranty must conform to the Sample Warranty as reviewed and approved by the Contracting Officer.

1.8.1 20 Year "No Dollar Limit" Warranty for Labor and Material

Furnish manufacturer's no-dollar-limit warranty for the metal wall panel system. The warranty period is to be no less than twenty (20) years from the date of Government acceptance of the work. The warranty is to be issued directly to the Government. The warranty is to provide that if within the warranty period the metal wall panel system shows evidence of corrosion, perforation, rupture or excess weathering due to deterioration of the wall panel system resulting from defective materials and correction of the defective workmanship is to be the responsibility of the metal wall panel system manufacturer. Repairs that become necessary because of defective materials and workmanship while metal wall panel system is under warranty are to be performed within 24 hours after notification, unless additional time is approved by the Contracting Officer. Failure to perform repairs within 24 hours of notification will constitute grounds for having emergency repairs performed by others and not void the warranty.

PART 2 PRODUCTS

2.1 FABRICATION

Unless approved otherwise, fabricate and finish metal wall panels and accessories at the factory to greatest extent possible, by manufacturer's standard procedures and processes and as necessary to fulfill indicated and specified performance requirements. Comply with indicated profiles and with dimensional and structural requirements. See section 01 33 29 LEED(tm) DOCUMENTATION for cumulative total recycled content requirements.

Provide panel profile, including major ribs and intermediate stiffening ribs, if any, for full length of panel. Fabricate metal wall panel side laps with factory-installed captive gaskets or separator strips that provide a tight seal and prevent metal-to-metal contact, in a manner that will seal weather-tight and minimize noise from movements within panel assembly.

2.1.1 Sheet Metal Accessories

Fabricate flashing and trim to comply with recommendations in SMACNA 1793 that apply to the design, dimensions, metal, and other characteristics of item indicated:

a. Form exposed sheet metal accessories that are without excessive oil canning, buckling, and tool marks and that are true to line and levels indicated, with exposed edges folded back to form hems.

b. End Seams: fabricate nonmoving end seams with flat-lock seams. Form seams and seal with epoxy seam sealer. Rivet joints for additional strength.

c. Sealed Joints: form non-expansion but movable joints in metal to accommodate elastomeric sealant to comply with SMACNA 1793.

d. Conceal fasteners and expansion provisions where possible. Exposed fasteners are not allowed on faces of accessories exposed to view.

e. Fabricate cleats and attachment devices of size and metal thickness recommended by SMACNA 1793 or by metal wall panel manufacturer for application, but not less than thickness of metal being secured.

2.2 PANEL TYPE

Different types of metal wall panels are required for this project:

a. P1481 requires a standard PEMB vertical panel to match wall panels of similar type buildings within MARSOC.

b. P1482 requires a flush rectangular panel to match existing metal panels on the existing adjacent building. Panel dimensions/proportions, surface texture and color to match existing panels

2.3 PANEL MATERIALS

2.3.1 Steel Sheet

Roll-form steel wall panels to the specified profile, with 24 gauge and depth as indicated. Material must be plumb and true, and within the tolerances listed:

a. Aluminum-Zinc Alloy-coated Steel Sheet conforming to ASTM A792/A792M and AISI SG03-3.

b. Individual panels must be continuous length to cover the entire length of any unbroken wall area with no joints or seams and formed without warping, waviness, or ripples that are not part of the panel profile and free of damage to the finish coating system.

c. Provide panels with thermal expansion and contraction consistent with the type of system specified.

2.3.2 Factory Color Finish

Comply with NAAMM AMP 500 for recommendations for applying and designating finishes. Noticeable variations in same piece are not acceptable. Variations in appearance of adjoining components are acceptable if they are within the range of approved samples and are assembled or installed to minimize contrast.

All panels are to receive a factory-applied polyvinylidene fluoride finish consisting of a baked-on top-coat with a manufacturer's recommended prime coat conforming to the following:

2.3.2.1 Metal Preparation

Carefully prepare all metal surface for painting on a continuous process coil coating line by alkali cleaning, hot water rinsing, application of chemical conversion coating, cold water rinsing, sealing with acid rinse, and thorough drying.

2.3.2.2 Prime Coating

Apply a base coat of epoxy paint, specifically formulated to interact with the top-coat, to the prepared surfaces by roll coating to a dry film thickness of 0.20 plus 0.05 mils. Prime coat must be oven cured prior to application of finish coat.

2.3.2.3 Exterior Finish Coating

Roll coat the finish coating over the primer by roll coating to dry film thickness of 0.80 plus 5 mils (3.80 plus 0.50 mils for Vinyl Plastisol) for a total dry film thickness of 1.00 plus 0.10 mils (4.00 plus 0.10 mils for Vinyl Plastisol). Oven-cure finish coat.

2.3.2.4 Interior Finish Coating

Apply a wash-coat on the reverse side over the primer by roll coating to a dry film thickness of 0.30 plus 0.05 mils for a total dry film thickness of 0.50 plus 0.10 mils. Oven-cured the wash coat.

2.3.2.5 Color

Designer of Record will select exterior wall panel finish color(s) from the manufacturer's standard color chart.

2.3.2.6 Physical Properties

Coating must conform to the industry and manufacturer's standard performance criteria as listed by the following certified test reports:

General:	ASTM D5894 and ASTM D4587
Abrasion:	ASTM D968
Adhesion:	ASTM D3359
Chalking:	ASTM D4214
Chemical Pollution:	ASTM D1308
Color Change and Conformity:	ASTM D2244
Creepage:	ASTM D1654
Cyclic Corrosion Test:	ASTM D5894
Flame Spread:	ASTM E84
Flexibility:	ASTM D522/D522M

Formability:	ASTM D522/D522M
Gloss at 60 and 85 degrees:	ASTM D523
Humidity:	ASTM D2247 and ASTM D714
Oxidation:	ASTM D610
Pencil Hardness:	ASTM D3363
Reverse Impact:	ASTM D2794
Salt Spray:	ASTM B117
Weatherometer:	ASTM G152, ASTM G153 and ASTM D822

2.4 MISCELLANEOUS METAL FRAMING

Cold-formed metallic-coated steel sheet conforming to ASTM A653/A653M and specified in Section 05 40 00 COLD-FORMED METAL FRAMING unless otherwise indicated.

2.4.1 Fasteners for Miscellaneous Metal Framing

Type, material, corrosion resistance, size and sufficient length to penetrate the supporting member a minimum of 1 inch with other properties required to fasten miscellaneous metal framing members to supporting members and substrates in accordance with the wall panel manufacturer's and ASCE 7 requirements.

2.5 FASTENERS

2.5.1 General

2.5.1.1 Exposed Fasteners

Provide corrosion resistant fasteners for wall panels, made of coated steel, aluminum, 300 - series corrosion resisting stainless steel, or nylon capped steel compatible with the sheet panel or flashing and of a type and size recommended by the manufacturer to meet the performance requirements and design loads.

Fasteners for accessories must be the manufacturer's standard. Provide an integral metal washer matching the color of attached material with compressible sealing EPDM gasket approximately 3/32 inch thick.

2.5.1.2 Hidden Fasteners

Provide corrosion resistant fasteners recommended by the manufacturer to meet the performance requirements and design loads.

2.5.1.3 Screws

Screws to be corrosion resistant coated steel, aluminum and/or 300 - series stainless steel being the type and size recommended by the manufacturer

to meet the performance requirements.

2.5.1.4 Rivets

Rivets to be closed-end type, corrosion resistant coated steel, aluminum or stainless steel where watertight connections are required.

2.5.1.5 Attachment Clips

Fabricate clips from steel hot-dipped galvanized in accordance with ASTM A653/A653M, Z275 G 90 or Series 300 stainless steel. Size, shape, thickness and capacity as required meeting the insulation thickness and design load criteria specified.

2.6 ACCESSORIES

2.6.1 General

All accessories must be compatible with the metal wall panels. Sheet metal flashing, trim, metal closure strips, caps and similar metal accessories must not be less than the minimum thickness specified for the wall panels. Exposed metal accessories/finishes to match the panels furnished, except as otherwise indicated. Molded foam rib, ridge and other closure strips must be non-absorbent closed-cell or solid-cell synthetic rubber or pre-molded neoprene to match configuration of the panels.

2.6.2 Rubber Closure Strips

Provide closed-cell, expanded cellular rubber conforming to ASTM D1056 and ASTM D1667; extruded or molded to the configuration of the specified wall panel and in lengths supplied by the wall panel manufacturer.

2.6.3 Metal Closure Strips

Provide factory fabricated steel closure strips to be the same gauge, color, finish and profile of the specified wall panel.

2.6.4 Joint Sealants

2.6.4.1 Sealants and Caulking

Provide and install sealant(s), sealant primer and sealant tape in strict adherence to manufacturer's instructions.

Provide approved gun type sealants for use in hand- or air-pressure caulking guns at temperatures above 4 degrees C (or frost-free application at temperatures above 10 degrees F with minimum solid content of 85 percent of the total volume. Sealants must dry with a tough, durable surface skin which permit remaining soft and pliable underneath, providing a weather-tight joint. No migratory staining is permitted on painted or unpainted metal, stone, glass, or vinyl.

2.6.4.2 Shop-Applied

Sealant for shop-applied caulking must be non-curing butyl compliant with AAMA 800 to ensure the sealant's plasticity at the time of field erection.

2.6.4.3 Field-Applied

Sealant for field-applied caulking must be an approved gun grade, non-sag one component polysulfide or two-component polyurethane with an initial maximum Shore A durometer hardness of 25, and conforming to ASTM C920, Type II. Color to match panel colors.

2.6.4.4 Pressure Sensitive Tape

Provide pressure sensitive tape sealant, 100 percent solid with a release paper backing; permanently elastic, non-sagging, non-toxic and non-staining as approved by the wall panel manufacturer.

2.7 SHEET METAL FLASHING AND TRIM

2.7.1 Fabrication

Shop fabricate sheet metal flashing and trim where practicable to comply with recommendations in SMACNA 1793 that apply to design, dimensions, metal, and other characteristics of item indicated. Obtain field measurements for accurate fit before shop fabrication.

Fabricate sheet metal flashing and trim without excessive oil canning, buckling, and tool marks and true to line and levels indicated, with exposed edges folded back to form hems.

2.8 REPAIR OF FINISH PROTECTION

Repair paint for color finish enameled wall panel must be compatible paint of the same formula and color as the specified finish furnished by the wall panel manufacturer. Provide 1 quart of aluminized steel repair paint repair paint matching the specified wall panels.

PART 3 EXECUTION

3.1 EXAMINATION

Examine substrates, areas, and conditions, with Installer present, for compliance with requirements for installation tolerances, metal wall panel supports, and other conditions affecting performance of the Work.

Examine primary and secondary wall framing to verify that rafters, purlins, angles, channels, and other structural panel support members and anchorages have been installed within alignment tolerances required by metal wall panel manufacturer, UL, ASTM, ASCE 7 and as required for the geographical area where construction will take place.

Examine solid wall sheathing to verify that sheathing joints are supported by framing or blocking and that installation is within flatness tolerances required by metal wall panel manufacturer.

Examine roughing-in for components and systems penetrating metal wall panels to verify actual locations of penetrations relative to seam locations of metal wall panels before metal wall panel installation.

Submit to the Contracting Officer a written report, endorsed by Installer, listing conditions detrimental to performance of the Work. Proceed with installation only after unsatisfactory conditions have been corrected.

3.2 PREPARATION

Clean substrates of substances harmful to insulation, including removing projections capable of interfering with insulation attachment. Miscellaneous framing installation, including sub-purlins, girts, angles, furring, and other miscellaneous wall panel support members and anchorage must be according to metal wall panel manufacturer's written instructions.

3.3 WALL PANEL INSTALLATION

Provide full length metal wall panels, from sill to eave as indicated, unless otherwise indicated or restricted by shipping limitations. Anchor metal wall panels and other components of the Work securely in place, with provisions for thermal and structural movement in accordance with MBMA MBSM.

Erect wall panel system in accordance with the approved erection drawings, the printed instructions and safety precautions of the manufacturer.

Sheets are not to be subjected to overloading, abuse, or undue impact. Bent, chipped, or defective sheets shall not be applied.

Sheets must be erected true and plumb and in exact alignment with the horizontal and vertical edges of the building, securely anchored, and with the indicated eave, and sill.

Work is to allow for thermal movement of the wall panel, movement of the building structure, and to provide permanent freedom from noise due to wind pressure.

Field cutting metal wall panels by torch is not permitted.

3.3.1 Steel Wall Panels

Use stainless-steel fasteners for exterior surfaces and galvanized steel fasteners for interior surfaces.

3.3.2 Anchor Clips

Anchor metal wall panels and other components of the Work securely in place, using manufacturer's approved fasteners according to manufacturers' written instructions.

3.3.3 Metal Protection

Where dissimilar metals will contact each other or corrosive substrates, protect against galvanic action by painting contact surfaces with bituminous coating, by applying rubberized-asphalt underlayment to each contact surface, or by other permanent separation as recommended by metal wall panel manufacturer.

3.3.4 Joint Sealers

Install gaskets, joint fillers, and sealants where indicated and where required for weatherproof performance of metal wall panel assemblies. Provide types of gaskets, fillers, and sealants indicated or, if not indicated, types recommended by metal wall panel manufacturer.

3.4 FASTENER INSTALLATION

Anchor metal wall panels and other components of the Work securely in place, using manufacturer's approved fasteners according to manufacturers'

written instructions.

3.5 FLASHING, TRIM AND CLOSURE INSTALLATION

3.5.1 General Requirements

Comply with performance requirements, manufacturer's written installation instructions, and SMACNA 1793. Provide concealed fasteners where possible, and set units true to line and level as indicated. Install work with laps, joints, and seams to form permanently watertight and weather resistant.

Install sheet metal work is to form weather-tight construction without waves, warps, buckles, fastening stresses or distortion, and allow for expansion and contraction. Cutting, fitting, drilling, and other operations in connection with sheet metal required to accommodate the work of other trades is to be performed by sheet metal mechanics.

3.5.2 Metal Flashing

Install exposed metal flashing at building corners, sills and eaves, junctions between metal siding and walling. Exposed metal flashing must be the same material, color, and finish as the specified metal wall panel.

Fasten flashing at a minimum of 8 inches on center, except where flashing is held in place by the same screws that secure covering sheets.

Flashing is to be furnished in at least 8 foot lengths. Exposed flashing is to have 1 inch locked and blind-soldered end joints, and expansion joints at intervals of not more than 16 feet.

Exposed flashing and flashing subject to rain penetration to be bedded in the specified joint sealant.

Isolate flashing which is in contact with dissimilar metals by means of the specified asphalt mastic material to prevent electrolytic deterioration.

Form drips to the profile indicated, with the edge folded back 1/2 inch to form a reinforced drip edge.

3.5.3 Closures

Install metal closure strips at open ends of corrugated or ribbed pattern walls, and at intersection of wall and wall unless open ends are concealed with formed eave flashing; and in other required areas.

Install mastic closure strips at intersection of the wall with metal walling; top and bottom of metal siding; heads of wall openings; and in other required locations.

3.6 WORKMANSHIP

Make lines, arises, and angles sharp and true. Free exposed surfaces from visible wave, warp, buckle, and tool marks. Fold back exposed edges neatly to form a 1/2 inch hem on the concealed side. Make sheet metal exposed to the weather watertight with provisions for expansion and contraction.

Make surfaces to receive sheet metal plumb and true, clean, even, smooth, dry, and free of defects and projections which might affect the application. For installation of items not shown in detail or not covered by specifications conform to the applicable requirements of SMACNA 1793. Provide sheet metal flashing in the angles formed where roof decks abut walls, curbs, ventilators, pipes, or other vertical surfaces and wherever indicated and necessary to make the work watertight.

3.7 ACCEPTANCE PROVISIONS

3.7.1 Erection Tolerances

Erect metal wall panels straight and true with plumb vertical lines correctly lapped and secured in accordance with the manufacturer's written instructions.

3.7.2 Leakage Tests

Finished application of metal wall panels are to be subject to inspection and test for leakage by request of the Contracting Officer, Architect/Engineer. Conduct inspection and tests at no cost to the Government.

Inspection and testing is to be made promptly after erection to permit correction of defects and the removal and replacement of defective materials.

3.7.3 Repairs to Finish

Scratches, abrasions, and minor surface defects of finish may be repaired with the specified repair materials. Finished repaired surfaces must be uniform and free from variations of color and surface texture.

Repaired metal surfaces that are not acceptable to the project requirements and/or Contracting Officer are to be immediately removed and replaced with new material.

3.7.4 Paint-Finish Metal Siding

Paint-finish metal siding will be tested for color stability by the Contracting Officer during the manufacturer's specified guarantee period.

Panels that indicate color changes, fading, or surface degradation, determined by visual examination, must be removed and replaced with new panels at no expense to the Government.

New panels will be subject to the specified tests for an additional year from the date of their installation.

3.8 FIELD QUALITY CONTROL

3.8.1 Construction Monitoring

Make visual inspections as necessary to ensure compliance with specified requirements. Additionally, verify the following:

a. Materials comply with the specified requirements.

b. All materials are properly stored, handled and protected from damage.

Damaged materials are removed from the site.

c. Framing and substrates are in acceptable condition, in compliance with specification, prior to application of wall panels.

d. Panels are installed without buckles, ripples, or waves and in uniform alignment and modulus.

e. Side laps are formed, sealed, fastened or seam locked as required.

f. The proper number, type, and spacing of attachment clips and fasteners are installed.

g. Installer adheres to specified and detailed application parameters.

h. Associated flashing and sheet metal are installed in a timely manner in accord with the specified requirements.

Provide five bound copies of Manufacturer's Field Reports to the Contracting Officer two weeks prior to project close-out.

3.9 CLEAN-UP AND DISPOSAL

Clean all exposed sheet metal work at completion of installation. Remove metal shavings, filings, nails, bolts, and wires from work area. Remove grease and oil films, excess sealants, handling marks, contamination from steel wool, fittings and drilling debris and scrub the work clean. Exposed metal surfaces must be free of dents, creases, waves, scratch marks, solder or weld marks, and damage to the finish coating.

Collect and place scrap/waste materials in containers. Promptly dispose of demolished materials. Do not allow demolished materials to accumulate on-site; transport demolished materials from government property and legally dispose of them.

-- End of Section --

THIS PAGE HAS BEEN INTENTIONALLY LEFT BLANK

SECTION 07 84 00

FIRESTOPPING
05/10

PART 1 GENERAL

1.1 SUMMARY

Furnish and install tested and listed firestopping systems, combination of materials, or devices to form an effective barrier against the spread of flame, smoke and gases, and maintain the integrity of fire resistance rated walls, partitions, floors, and ceiling-floor assemblies, including through-penetrations and construction joints and gaps.

a. Through-penetrations include the annular space around pipes, tubes, conduit, wires, cables and vents.

b. Construction joints include those used to accommodate expansion, contraction, wind, or seismic movement; firestopping material shall not interfere with the required movement of the joint.

Gaps requiring firestopping include gaps between the curtain wall and the floor slab and between the top of the fire-rated walls and the roof or floor deck above and at the intersection of shaft assemblies and adjoining fire resistance rated assemblies.

1.2 REFERENCES

The publications listed below form a part of this specification to the extent referenced. The publications are referred to within the text by the basic designation only.

ASTM INTERNATIONAL (ASTM)

ASTM E119	(2016a) Standard Test Methods for Fire Tests of Building Construction and Materials
ASTM E1399/E1399M	(1997; E 2013;R 2013) Cyclic Movement and Measuring the Minimum and Maximum Joint Widths of Architectural Joint Systems
ASTM E1966	(2015) Fire-Resistive Joint Systems
ASTM E2174	(2014b) Standard Practice for On-Site Inspection of Installed Fire Stops
ASTM E2307	(2015a) Standard Test Method for Determining Fire Resistance of Perimeter Fire Barrier Systems Using Intermediate-Scale, Multi-story Test Apparatus
ASTM E2393	(2010a) Standard Practice for On-Site Inspection of Installed Fire Resistive Joint Systems and Perimeter Fire Barriers

ASTM E699	(2009) Standard Practice for Evaluation of Agencies Involved in Testing, Quality Assurance, and Evaluating of Building Components
ASTM E814	(2013a) Standard Test Method for Fire Tests of Through-Penetration Fire Stops
ASTM E84	(2016) Standard Test Method for Surface Burning Characteristics of Building Materials

FM GLOBAL (FM)

FM 4991	(2013) Approval of Firestop Contractors
FM APP GUIDE	(updated on-line) Approval Guide http://www.approvalguide.com/

INTERNATIONAL CODE COUNCIL (ICC)

ICC IBC	(2015) International Building Code

UNDERWRITERS LABORATORIES (UL)

UL 1479	(2015) Fire Tests of Through-Penetration Firestops
UL 2079	(2004; Reprint Dec 2014) Tests for Fire Resistance of Building Joint Systems
UL 723	(2008; Reprint Aug 2013) Test for Surface Burning Characteristics of Building Materials
UL Fire Resistance	(2014) Fire Resistance Directory

1.3 SEQUENCING

Coordinate the specified work with other trades. Apply firestopping materials, at penetrations of pipes and ducts, prior to insulating, unless insulation meets requirements specified for firestopping. Apply firestopping materials. at building joints and construction gaps, prior to completion of enclosing walls or assemblies. Cast-in-place firestop devices shall be located and installed in place before concrete placement. Pipe, conduit or cable bundles shall be installed through cast-in-place device after concrete placement but before area is concealed or made inaccessible. Firestop material shall be inspected and approved prior to final completion and enclosing of any assemblies that may conceal installed firestop.

1.4 SUBMITTALS

Government approval is required for submittals with a "G" designation; submittals not having a "G" designation are for Contractor Quality Control approval. Submittals with an "S" are for inclusion in the Sustainability Notebook, in conformance to Section 01 33 29 SUSTAINABILITY REPORTING. Submit the following in accordance with Section 01 33 00 SUBMITTAL

PROCEDURES:

SD-02 Shop Drawings

Firestopping System; G

SD-03 Product Data

Firestopping Materials; G

SD-06 Test Reports

Inspection; G

SD-07 Certificates

Inspector Qualifications; G
Firestopping Materials; G
Installer Qualifications; G
Fire Dampers; G

1.5 QUALITY ASSURANCE

1.5.1 Installer

Engage an experienced Installer who is:

a. FM Research approved in accordance with FM 4991, operating as a UL Certified Firestop Contractor.

b. Certified, licensed, or otherwise qualified by the firestopping manufacturer as having the necessary staff, training, and a minimum of 3 years experience in the installation of manufacturer's products in accordance with specified requirements. Submit documentation of this experience. A manufacturer's willingness to sell its firestopping products to the Contractor or to an installer engaged by the Contractor does not in itself confer installer qualifications on the buyer. The Installer shall have been trained by a direct representative of the manufacturer (not distributor or agent) in the proper selection and installation procedures. The installer shall obtain from the manufacturer and submit written certification of training, and retain proof of certification for duration of firestop installation.

1.5.2 Inspector Qualifications

The inspector shall meet the criteria contained in ASTM E699 for agencies involved in quality assurance and shall have a minimum of two years experience in construction field inspections of firestopping systems, products, and assemblies. The inspector shall be completely independent of, and divested from, the installer, the manufacturer, and the supplier of any material or item being inspected. The inspector shall not be a competitor of the installer, the contractor, the manufacturer, or supplier of any material or item being inspected. Include in the qualifications submittal a notarized statement assuring compliance with the requirements stated herein.

1.6 DELIVERY, STORAGE, AND HANDLING

Deliver materials in the original unopened packages or containers showing name of the manufacturer and the brand name. Store materials off the ground, protected from damage and exposure to elements and temperatures in accordance with manufacturer requirements. Remove damaged or deteriorated materials from the site. Use materials within their indicated shelf life.

PART 2 PRODUCTS

2.1 FIRESTOPPING SYSTEM

Submit detail drawings including manufacturer's descriptive data, typical details conforming to UL Fire Resistance or other details certified by another nationally recognized testing laboratory, installation instructions or UL listing details for a firestopping assembly in lieu of fire-test data or report. For those firestop applications for which no UL tested system is available through a manufacturer, a manufacturer's engineering judgment, derived from similar UL system designs or other tests, shall be submitted for review and approval prior to installation. Submittal must indicate the firestopping material to be provided for each type of application. When more than a total of 5 penetrations and/or construction joints are to receive firestopping, provide drawings that indicate location, "F" "T" and "L" ratings, and type of application.

Also, submit a written report indicating locations of and types of penetrations and types of firstopping used at each location; record type by UL list printed numbers.

2.2 FIRESTOPPING MATERIALS

Provide firestopping materials, supplied from a single domestic manufacturer, consisting of commercially manufactured, asbestos-free, nontoxic products FM APP GUIDE approved, or UL listed, for use with applicable construction and penetrating items, complying with the following minimum requirements:

2.2.1 Fire Hazard Classification

Material shall have a flame spread of 25 or less, and a smoke developed rating of 50 or less, when tested in accordance with ASTM E84 or UL 723. Material shall be an approved firestopping material as listed in UL Fire Resistance or by a nationally recognized testing laboratory.

2.2.2 Toxicity

Material shall be nontoxic and carcinogen free to humans at all stages of application or during fire conditions and shall not contain hazardous chemicals or require harmful chemicals to clean material or equipment.

2.2.3 Fire Resistance Rating

Firestop systems shall be UL Fire Resistance listed or FM APP GUIDE approved with "F" rating at least equal to fire-rating of fire wall or floor in which penetrated openings are to be protected. Where required, firestop systems shall also have "T" rating at least equal to the fire-rated floor in which the openings are to be protected.

2.2.3.1 Through-Penetrations

Firestopping materials for through-penetrations, as described in paragraph

SYSTEM DESCRIPTION, shall provide "F", "T" and "L" fire resistance ratings in accordance with ASTM E814 or UL 1479. Fire resistance ratings shall be as follows:

2.2.3.1.1 Penetrations of Fire Resistance Rated Walls and Partitions

F Rating = Rating of wall or partition being penetrated.

2.2.3.1.2 Penetrations of Fire Resistance Rated Floors, Floor-Ceiling Assemblies and the Ceiling Membrane of Roof-Ceiling Assemblies

F Rating = 1 hour, T Rating = 1 hour. Where the penetrating item is outside of a wall cavity the F rating must be equal to the fire resistance rating of the floor penetrated, and the T rating shall be in accordance with the requirements of ICC IBC.

2.2.3.1.3 Penetrations of Fire and Smoke Resistance Rated Walls, Floors, Floor-Ceiling Assemblies, and the ceiling membrane of Roof-Ceiling Assemblies

F Rating = 1 hour, T Rating = 1 hour and L Rating = Where L rating is required.

2.2.3.2 Construction Joints and Gaps

Fire resistance ratings of construction joints, as described in paragraph SYSTEM DESCRIPTION, and gaps such as those between floor slabs and curtain walls shall be the same as the construction in which they occur. Construction joints and gaps shall be provided with firestopping materials and systems that have been tested in accordance with ASTM E119, ASTM E1966 or UL 2079 to meet the required fire resistance rating. Curtain wall joints shall be provided with firestopping materials and systems that have been tested in accordance with ASTM E2307 to meet the required fire resistance rating. Systems installed at construction joints shall meet the cycling requirements of ASTM E1399/E1399M or UL 2079. All joints at the intersection of the top of a fire resistance rated wall and the underside of a fire-rated floor, floor ceiling, or roof ceiling assembly shall provide a minimum class II movement capability.

2.2.4 Material Certification

Submit certificates attesting that firestopping material complies with the specified requirements. For all intumescent firestop materials used in through penetration systems, manufacturer shall provide certification of compliance with UL 1479.

PART 3 EXECUTION

3.1 PREPARATION

Areas to receive firestopping must be free of dirt, grease, oil, or loose materials which may affect the fitting or fire resistance of the firestopping system. For cast-in-place firestop devices, formwork or metal deck to receive device prior to concrete placement must be sound and capable of supporting device. Prepare surfaces as recommended by the manufacturer.

3.2 INSTALLATION

Completely fill void spaces with firestopping material regardless of

geometric configuration, subject to tolerance established by the manufacturer. Firestopping systems for filling floor voids 4 inches or more in any direction must be capable of supporting the same load as the floor is designed to support or be protected by a permanent barrier to prevent loading or traffic in the firestopped area. Install firestopping in accordance with manufacturer's written instructions. Provide tested and listed firestop systems in the following locations, except in floor slabs on grade:

a. Penetrations of duct, conduit, tubing, cable and pipe through floors and through fire-resistance rated walls, partitions, and ceiling-floor assemblies.

b. Penetrations of vertical shafts such as pipe chases, elevator shafts, and utility chutes.

c. Gaps at the intersection of floor slabs and curtain walls, including inside of hollow curtain walls at the floor slab.

d. Gaps at perimeter of fire-resistance rated walls and partitions, such as between the top of the walls and the bottom of roof decks.

e. Construction joints in floors and fire rated walls and partitions.

f. Other locations where required to maintain fire resistance rating of the construction.

3.2.1 Insulated Pipes and Ducts

Thermal insulation shall be cut and removed where pipes or ducts pass through firestopping, unless insulation meets requirements specified for firestopping. Replace thermal insulation with a material having equal thermal insulating and firestopping characteristics.

3.2.2 Fire Dampers

Install and firestop fire dampers in accordance with Section 23 00 00 AIR SUPPLY, DISTRIBUTION, VENTILATION, AND EXHAUST SYSTEM. Firestop installed with fire damper must be tested and approved for use in fire damper system. Firestop installed with fire damper must be tested and approved for use in fire damper system.

3.2.3 Data and Communication Cabling

Cabling for data and communication applications shall be sealed with re-enterable firestopping products .

3.2.3.1 Re-Enterable Devices

Firestopping devices shall be pre-manufactured modular devices, containing built-in self-sealing intumescent inserts. Firestopping devices shall allow for cable moves, additions or changes without the need to remove or replace any firestop materials. Devices must be capable of maintaining the fire resistance rating of the penetrated membrane at 0 percent to 100 percent visual fill of penetrants; while maintaining "L" rating of <10 cfm/sf measured at ambient temperature and 400 degrees F at 0 percent to 100 percent visual fill.

3.2.3.2 Re-Sealable Products

Provide firestopping pre-manufactured modular products, containing self-sealing intumescent inserts. Firestopping products shall allow for cable moves, additions or changes. Devices shall be capable of maintaining the fire resistance rating of the penetrated membrane at 0 percent to 100 percent visual fill of penetrants.

3.3 INSPECTION

For Navy projects, install one of each type of penetration and have it inspected and accepted by the MIDLANT Division, Naval Facilities Engineering Command, Fire Protection Engineer prior to the installation of the remainder of the penetrations. At this inspection, the manufacturer's technical representative of the firestopping material shall be present. For all projects, the remainder of shall not be covered or enclosed until inspection is complete and approved by the Contracting Officer. Inspect the applications initially to ensure adequate preparations (clean surfaces suitable for application, etc.) and periodically during the work to assure that the completed work has been accomplished according to the manufacturer's written instructions and the specified requirements. Submit written reports indicating locations of and types of penetrations and types of firestopping used at each location; type shall be recorded by UL listed printed numbers.

3.3.1 Inspection Standards

Inspect all firestopping in accordance to ASTM E2393 and ASTM E2174 for firestop inspection, and document inspection results to be submitted.

3.3.2 Inspection Reports

Submit inspection report stating that firestopping work has been inspected and found to be applied according to the manufacturer's recommendations and the specified requirements.

-- End of Section --

THIS PAGE HAS BEEN INTENTIONALLY LEFT BLANK

SECTION 07 92 00

JOINT SEALANTS
08/16

PART 1 GENERAL

1.1 REFERENCES

The publications listed below form a part of this specification to the extent referenced. The publications are referred to within the text by the basic designation only.

ASTM INTERNATIONAL (ASTM)

ASTM C1193	(2013) Standard Guide for Use of Joint Sealants
ASTM C1311	(2014) Standard Specification for Solvent Release Agents
ASTM C1521	(2013) Standard Practice for Evaluating Adhesion of Installed Weatherproofing Sealant Joints
ASTM C509	(2006; R 2015) Elastomeric Cellular Preformed Gasket and Sealing Material
ASTM C734	(2015) Low-Temperature Flexibility of Latex Sealants After Artificial Weathering
ASTM C919	(2012) Use of Sealants in Acoustical Applications
ASTM C920	(2014a) Standard Specification for Elastomeric Joint Sealants
ASTM D1056	(2014) Standard Specification for Flexible Cellular Materials - Sponge or Expanded Rubber
ASTM D1667	(2005; R 2011) Flexible Cellular Materials - Poly (Vinyl Chloride) Foam (Closed-Cell)
ASTM D217	(2010) Cone Penetration of Lubricating Grease
ASTM D2452	(2015) Standard Test Method for Extrudability of Oil- and Resin-Base Caulking Compounds
ASTM D2453	(2015) Standard Test Method for Shrinkage and Tenacity of Oil- and Resin-Base Caulking Compounds
ASTM E84	(2016) Standard Test Method for Surface Burning Characteristics of Building Materials

CALIFORNIA DEPARTMENT OF PUBLIC HEALTH (CDPH)

CDPH SECTION 01350	(2004; Add 2004-01) Standard Practice for the Testing Of Volatile Organic Emissions from Various Sources Using Small-Scale Environmental Chambers

SCIENTIFIC CERTIFICATION SYSTEMS (SCS)

SCS	SCS Global Services (SCS)Indoor Advantage

SOUTH COAST AIR QUALITY MANAGEMENT DISTRICT (SCAQMD)

SCAQMD Rule 1168	(1989; R 2005) Adhesive and Sealant Applications

UNDERWRITERS LABORATORIES (UL)

UL 2818	(2013) GREENGUARD Certification Program For Chemical Emissions For Building Materials, Finishes And Furnishings

1.2 SUBMITTALS

Government approval is required for submittals with a "G" designation; submittals not having a "G" designation are for Contractor Quality Control approval. Submittals with an "S" are for inclusion in the Sustainability Notebook, in conformance with Section 01 33 29 SUSTAINABILITY REPORTING. Submit the following in accordance with Section 01 33 00 SUBMITTAL PROCEDURES:

SD-03 Product Data

Sealants; G;S

Primers; G

Bond Breakers; G

Backstops; G

SD-06 Test Reports

Field Adhesion; G

SD-07 Certificates

Indoor Air Quality; G; SSD-11 Closeout Submittals

Indoor Air Quality For Interior Sealants; S

Indoor Air Quality For Interior Floor Joint Sealants; S

Indoor Air Quality For Interior Acoustical Sealants; S

Indoor Air Quality For Interior Caulking; S

1.3 PRODUCT DATA

Include storage requirements, shelf life, curing time, instructions for mixing and application, and accessories. Provide manufacturer's Material Safety Data Sheet (MSDS) for each solvent, primer and sealant material proposed.

1.4 CERTIFICATIONS

1.4.1 Indoor Air Quality Certifications

Submit required indoor air quality certifications in one submittal package.

1.4.1.1 Adhesives and Sealants

Provide products certified to meet indoor air quality requirements by UL 2818 (Greenguard) Gold, SCS Global Services Indoor Advantage Gold or provide validation by other third-party program that products meet the requirements of this paragraph. Sealants and non-aerosol adhesive products used on the interior of the building (defined as inside of the weatherproofing system) must meet either emissions requirements of CDPH SECTION 01350 (limit requirements for either office or classroom spaces regardless of space type) or VOC content requirements of SCAQMD Rule 1168. Provide current product certification documentation from certification body.

1.5 ENVIRONMENTAL CONDITIONS

Apply sealant when the ambient temperature is between 40 and 90 degrees F.

1.6 DELIVERY AND STORAGE

Deliver materials to the jobsite in unopened manufacturers' sealed shipping containers, with brand name, date of manufacture, color, and material designation clearly marked thereon. Label elastomeric sealant containers to identify type, class, grade, and use. Handle and store materials in accordance with manufacturer's printed instructions. Prevent exposure to foreign materials or subjection to sustained temperatures exceeding 90 degrees F or lower than 0 degrees F. Keep materials and containers closed and separated from absorptive materials such as wood and insulation.

1.7 QUALITY ASSURANCE

1.7.1 Compatibility with Substrate

Verify that each sealant is compatible for use with each joint substrate in accordance with sealant manufacturer's printed recommendations for each application.

1.7.2 Joint Tolerance

Provide joint tolerances in accordance with manufacturer's printed instructions.

1.7.3 Mock-Up

Provide a mock-up of each type of sealant using materials, colors, and techniques approved for use on the project. Approved mock-ups may be incorporated into the Work.

1.7.4 Adhesion

Provide in accordance with ASTM C1193 or ASTM C1521.

PART 2 PRODUCTS

2.1 PRODUCT SUSTAINABILITY CRITERIA

For products in this section, where applicable and to extent allowed by performance criteria, provide products with reduced Volative Organic Compounds (VOC) and document the following:

2.1.1 Reduce Volatile Organic Compounds (VOC) (Low-Emitting Materials) for Products

Reduced VOC content is identified for some products in this section; provide documentation in accordance with Section 01 33 29 SUSTAINABILITY REPORTING paragraph REDUCE VOLATILE ORGANIC COMPOUNDS (VOC) (LOW-EMITTING MATERIALS). Provide certification of indoor air quality for interior sealants.

2.2 SEALANTS

Provide sealant products that have been tested, found suitable, and documented as such by the manufacturer for the particular substrates to which they will be applied.

2.2.1 Interior Sealants

Provide ASTM C920, Type S or M, Grade NS, Class 12.5, Use NT. Provide certification of indoor air quality for interior sealants. Location(s) and color(s) of sealant for the following. Note, color "as selected" refers to manufacturer's full range of color options

LOCATION	COLOR
a. Small voids between walls or partitions and adjacent lockers, casework, shelving, door frames, built-in or surface mounted equipment and fixtures, and similar items.	To Match wall color or as indicated in Finish Schedule
b. Perimeter of frames at doors, windows, and access panels which adjoin exposed interior concrete and masonry surfaces.	To match wall color
c. Joints of interior masonry walls and partitions which adjoin columns, pilasters, concrete walls, and exterior walls unless otherwise detailed.	To match wall color

LOCATION	COLOR
d. Joints between edge members for acoustical tile and adjoining vertical surfaces.	White
e. Interior locations, not otherwise indicated or specified, where small voids exist between materials specified to be painted.	To match adjacent surface color
f. Joints between bathtubs and ceramic tile; joints between shower receptors and ceramic tile; joints formed where non-planar tile surfaces meet.	To match grout color
g. Joints formed between tile floors and tile base cove; joints between tile and dissimilar materials; joints occurring where substrates change.	To match grout color
h. Behind escutcheon plates at valve pipe penetrations and showerheads in showers.	White

2.2.2 Exterior Sealants

For joints in vertical surfaces, provide ASTM C920, Type S or M, Grade NS, Class 25, Use NT. For joints in horizontal surfaces, provide ASTM C920, Type S or M, Grade P, Class 25, Use T. Provide location(s) and color(s) of sealant as follows. Note, color "as selected" refers to manufacturer's full range of color options:

LOCATION	COLOR
a. Joints and recesses formed where frames and subsills of windows, doors, louvers, and vents adjoin masonry, concrete, or metal frames. Use sealant at both exterior and interior surfaces of exterior wall penetrations.	Match adjacent surface color
b. Joints between new and existing exterior masonry walls.	Match mortoar colormortar
c. Masonry joints where shelf angles occur.	Match mortar color mortar
d. Joints in wash surfaces of stonework.	NA
e. Expansion and control joints.	Match mortar color

LOCATION	COLOR
f. Interior face of expansion joints in exterior concrete or masonry walls where metal expansion joint covers are not required.	Match mortar color
g. Voids where items pass through exterior walls.	Match wall color
h. Metal reglets, where flashing is inserted into masonry joints, and where flashing is penetrated by coping dowels.	Match flashing
i. Metal-to-metal joints where sealant is indicated or specified.	Match metal color
j. Joints between ends of gravel stops, fasciae, copings, and adjacent walls.	Match flashing/trim color

2.2.3 Floor Joint Sealants

ASTM C920, Type S or M, Grade P, Class 25, Use T. Provide certification of indoor air quality for interior floor joint sealants. Provide location(s) and color(s) of sealant as follows. Note, color "as selected" refers to manufacturer's full range of color options:

LOCATION	COLOR
a. Seats of metal thresholds for exterior doors.	Gray
b. Control and expansion joints in floors, slabs, ceramic tile, and walkways.	Gray

2.2.4 Acoustical Sealants

Rubber or polymer based acoustical sealant in accordance with ASTM C919 to have a flame spread of 25 or less and a smoke developed rating of 50 or less when tested in accordance with ASTM E84. Provide non-staining acoustical sealant with a consistency of 250 to 310 when tested in accordance with ASTM D217. Acoustical sealant must remain flexible and adhesive after 500 hours of accelerated weathering as specified in ASTM C734. Provide certification of indoor air quality for interior acoustical sealants.

2.2.5 Preformed Sealants

Provide preformed sealants of polybutylene or isoprene-butylene based pressure sensitive weather resistant tape or bead sealants capable of sealing out moisture, air and dust when installed as recommended by the

manufacturer. At temperatures from minus 30 to plus 160 degrees F, sealants must be non-bleeding and have no loss of adhesion.

2.2.5.1 Tape

Tape sealant: Provide cross section dimensions of one-half width or 1/4 inch minimum.

2.2.5.2 Bead

Bead sealant: Provide cross section dimensions of one-half joint width or 1/4 inch minimum.2.3 PRIMERS

Non-staining, quick drying type and consistency as recommended by the sealant manufacturer for the particular application. Provide primers for interior applications that meet the indoor air quality requirements of the paragraph SEALANTS above.

2.4 BOND BREAKERS

Type and consistency as recommended by the sealant manufacturer to prevent adhesion of the sealant to the backing or to the bottom of the joint. Provide bond breakers for interior applications that meet the indoor air quality requirements of the paragraph SEALANTS above.

2.5 BACKSTOPS

Provide glass fiber roving, neoprene, butyl, polyurethane, or polyethylene foams free from oil or other staining elements as recommended by sealant manufacturer. Provide 25 to 33 percent oversized backing for closed cell and 40 to 50 percent oversized backing for open cell material, unless otherwise indicated. Provide backstop material that is compatible with sealant. Do not use oakum or other types of absorptive materials as backstops.

2.5.1 Rubber

Provide in accordance with ASTM D1056, Type 1, open cell, or Type 2, closed cell, Class A, cross section for cellular rubber sponge backing.

2.5.2 PVC

Provide in accordance with ASTM D1667, Grade VO 12, open-cell foam, round cross section for polyvinyl chloride (PVC) backing.

2.5.3 Synthetic Rubber

Provide in accordance with ASTM C509, Option I, Type I preformed rods or tubes synthetic rubber backing.

2.5.4 Neoprene

Provide in accordance with ASTM D1056, closed cell expanded neoprene cord Type 2, Class C, Grade 2C2 neoprene backing.

2.5.5 Butyl Rubber Based

Provide in accordance with ASTM C1311, from a single component, with solvent release.

Color as selected from manufacturer's full range of color choices.

2.5.6 Silicone Rubber Base

Provide in accordance with ASTM C920, from a single component, with solvent release. Color as selected from manufacturer's full range of color choices.

2.6 CAULKING

For interior use and only where there is little or no anticipated joint movement. Provide in accordance with ASTM D2452 and ASTM D2453, paintable, 100 percent acrylic caulking. Provide certification of indoor air quality for interior caulking.

2.7 CLEANING SOLVENTS

Provide type(s) recommended by the sealant manufacturer and in accordance with environmental requirements herein. Protect adjacent aluminum and bronze surfaces from solvents. Provide solvents for interior applications that meet the indoor air quality requirements of the paragraph SEALANTS above.

PART 3 EXECUTION

3.1 FIELD QUALITY CONTROL

Perform a field adhesion test in accordance with manufacturer's instructions and ASTM C1193, Method A or ASTM C1521, Method A, Tail Procedure. Remove sealants that fail adhesion testing; clean substrates, reapply sealants, and re-test. Test sealants adjacent to failed sealants. Submit field adhesion test report indicating tests, locations, dates, results, and remedial actions taken.

3.2 SURFACE PREPARATION

Prepare surfaces according to manufacturer's printed installation instructions. Clean surfaces from dirt, frost, moisture, grease, oil, wax, lacquer, paint, or other foreign matter that would destroy or impair adhesion. Remove oil and grease with solvent; thoroughly remove solvents prior to sealant installation. Wipe surfaces dry with clean cloths. When resealing an existing joint, remove existing caulk or sealant prior to applying new sealant. For surface types not listed below, provide in accordance with sealant manufacturer's printed instructions for each specific surface.

3.2.1 Steel Surfaces

Remove loose mill scale by sandblasting or, if sandblasting is impractical or would damage finished work, scraping and wire brushing. Remove protective coatings by sandblasting or using a residue free solvent. Remove resulting debris and solvent residue prior to sealant installation.

3.2.2 Aluminum or Bronze Surfaces

Remove temporary protective coatings from surfaces that will be in contact with sealant. When masking tape is used as a protective coating, remove tape and any residual adhesive prior to sealant application. For removing protective coatings and final cleaning, use non-staining solvents

recommended by the manufacturer of the item(s) containing aluminum or bronze surfaces.

3.2.3 Concrete and Masonry Surfaces

Where surfaces have been treated with curing compounds, oil, or other such materials, remove materials by sandblasting or wire brushing. Remove laitance, efflorescence and loose mortar from the joint cavity. Remove resulting debris prior to sealant installation.

3.2.4 Wood Surfaces

Ensure wood surfaces that will be in contact with sealants are free of splinters, sawdust and other loose particles.

3.3 SEALANT PREPARATION

Do not add liquids, solvents, or powders to sealants. Mix multicomponent elastomeric sealants in accordance with manufacturer's printed instructions.

3.4 APPLICATION

3.4.1 Joint Width-To-Depth Ratios

Acceptable Ratios:

JOINT WIDTH	JOINT DEPTH	
	Minimum	Maximum
For metal, glass, or other nonporous surfaces:		
1/4 inch (minimum)	1/4 inch	1/4 inch
over 1/4 inch	1/2 of width	Equal to width
For wood, concrete, masonry, stone:		
1/4 inch (minimum)	1/4 inch	1/4 inch
over 1/4 inch to 1/2 inch	1/4 inch	Equal to width
over 1/2 inch to 1 inch	1/2 inch	5/8 inch
Over 1 inch	prohibited	

Unacceptable Ratios: Where joints of acceptable width-to-depth ratios have not been provided, clean out joints to acceptable depths and grind or cut to acceptable widths without damage to the adjoining work. Grinding is prohibited at metal surfaces.

3.4.2 Unacceptable Sealant Use

Do not install sealants in lieu of other required building enclosure weatherproofing components such as flashing, drainage components, and joint closure accessories, or to close gaps between walls, floors, roofs,

windows, and doors, that exceed acceptable installation tolerances. Remove sealants that have been used in an unacceptable manner and correct building enclosure deficiencies to comply with contract documents requirements.

3.4.3 Masking Tape

Place masking tape on the finished surface on one or both sides of joint cavities to protect adjacent finished surfaces from primer or sealant smears. Remove masking tape within 10 minutes of joint filling and tooling.

3.4.4 Backstops

Provide backstops dry and free of tears or holes. Tightly pack the back or bottom of joint cavities with backstop material to provide joints in specified depths. Provide backstops where indicated and where backstops are not indicated but joint cavities exceed the acceptable maximum depths specified in JOINT WIDTH-TO-DEPTH RATIOS Table.

3.4.5 Primer

Clean out loose particles from joints immediately prior to application of. Apply primer to joints in concrete masonry units, wood, and other porous surfaces in accordance with sealant manufacturer's printed instructions. Do not apply primer to exposed finished surfaces.

3.4.6 Bond Breaker

Provide bond breakers to surfaces not intended to bond in accordance with, sealant manufacturer's printed instructions for each type of surface and sealant combination specified.

3.4.7 Sealants

Provide sealants compatible with the material(s) to which they are applied. Do not use a sealant that has exceeded its shelf life or has jelled and cannot be discharged in a continuous flow from the sealant gun. Apply sealants in accordance with the manufacturer's printed instructions with a gun having a nozzle that fits the joint width. Work sealant into joints so as to fill the joints solidly without air pockets. Tool sealant after application to ensure adhesion. Apply sealant uniformly smooth and free of wrinkles. Upon completion of sealant application, roughen partially filled or unfilled joints, apply additional sealant, and tool smooth as specified. Apply sealer over sealants in accordance with the sealant manufacturer's printed instructions.

3.5 PROTECTION AND CLEANING

3.5.1 Protection

Protect areas adjacent to joints from sealant smears. Masking tape may be used for this purpose if removed 5 to 10 minutes after the joint is filled and no residual tape marks remain.

3.5.2 Final Cleaning

Upon completion of sealant application, remove remaining smears and stains and leave the work in a clean and neat condition.

a. Masonry and Other Porous Surfaces: Immediately remove fresh sealant that has been smeared on adjacent masonry, rub clean with a solvent, and remove solvent residue, in accordance with sealant manufacturer's printed instructions. Allow excess sealant to cure for 24 hour then remove by wire brushing or sanding. Remove resulting debris.

b. Metal and Other Non-Porous Surfaces: Remove excess sealant with a solvent moistened cloth. Remove solvent residue in accordance with solvent manufacturer's printed instructions.

-- End of Section --

THIS PAGE HAS BEEN INTENTIONALLY LEFT BLANK

SECTION 08 11 13

STEEL DOORS AND FRAMES
02/10

PART 1 GENERAL

1.1 REFERENCES

The publications listed below form a part of this specification to the extent referenced. The publications are referred to in the text by the basic designation only.

AMERICAN WELDING SOCIETY (AWS)

AWS D1.1/D1.1M	(2015; Errata 1 2015; Errata 2 2016) Structural Welding Code - Steel

ASTM INTERNATIONAL (ASTM)

ASTM A653/A653M	(2015; E 2016) Standard Specification for Steel Sheet, Zinc-Coated (Galvanized) or Zinc-Iron Alloy-Coated (Galvannealed) by the Hot-Dip Process
ASTM A879/A879M	(2012) Standard Specification for Steel Sheet, zinc Coated by the Electrolytic Process for Applications Requiring Designation of the Coating Mass on Each Surface
ASTM A924/A924M	(2016a) Standard Specification for General Requirements for Steel Sheet, Metallic-Coated by the Hot-Dip Process
ASTM C578	(2015b) Standard Specification for Rigid, Cellular Polystyrene Thermal Insulation
ASTM C591	(2016) Standard Specification for Unfaced Preformed Rigid Cellular Polyisocyanurate Thermal Insulation
ASTM C612	(2014) Mineral Fiber Block and Board Thermal Insulation
ASTM D2863	(2013) Measuring the Minimum Oxygen Concentration to Support Candle-Like Combustion of Plastics (Oxygen Index)
ASTM E1300	(2016) Standard Practice for Determining Load Resistance of Glass in Buildings
ASTM E283	(2004; R 2012) Determining the Rate of Air Leakage Through Exterior Windows, Curtain Walls, and Doors Under Specified Pressure Differences Across the Specimen
ASTM F2248	(2012) Standard Practice for Specifying an

Equivalent 3-Second Duration Design Loading for Blast Resistant Glazing Fabricated with Laminated Glass

BUILDERS HARDWARE MANUFACTURERS ASSOCIATION (BHMA)

ANSI/BHMA A156.115 (2014) Hardware Preparation in Steel Doors and Steel Frames

NATIONAL FIRE PROTECTION ASSOCIATION (NFPA)

NFPA 252 (2012) Standard Methods of Fire Tests of Door Assemblies

NFPA 80 (2016) Standard for Fire Doors and Other Opening Protectives

STEEL DOOR INSTITUTE (SDI/DOOR)

SDI/DOOR 111 (2009) Recommended Selection and Usage Guide for Standard Steel Doors, Frames and Accessories

SDI/DOOR 113 (2001; R2006) Standard Practice for Determining the Steady State Thermal Transmittance of Steel Door and Frame Assemblies

SDI/DOOR A250.11 (2001) Recommended Erection Instructions for Steel Frames

SDI/DOOR A250.4 (2011) Test Procedure and Acceptance Criteria for Physical Endurance for Steel Doors and Hardware Reinforcing

SDI/DOOR A250.6 (2003; R2009) Recommended Practice for Hardware Reinforcing on Standard Steel Doors and Frames

SDI/DOOR A250.8 (2003; R2008) Recommended Specifications for Standard Steel Doors and Frames

UNDERWRITERS LABORATORIES (UL)

UL 10C (2016) UL Standard for Safety Positive Pressure Fire Tests of Door Assemblies

1.2 SUBMITTALS

Government approval is required for submittals with a "G" designation; submittals not having a "G" designation are for Contractor Quality Control approval. Submit the following in accordance with Section 01 33 00 SUBMITTAL PROCEDURES:

SD-02 Shop Drawings

Doors; G

Frames; G

Accessories

Weatherstripping

Show elevations, construction details, metal gages, hardware provisions, method of glazing, and installation details.

Schedule of doors; G

Schedule of frames; G

Submit door and frame locations.

SD-03 Product Data

Doors; G

Frames; G

Accessories

Weatherstripping

Submit manufacturer's descriptive literature for doors, frames, and accessories. Include data and details on door construction, panel (internal) reinforcement, insulation, and door edge construction.

1.3 DELIVERY, STORAGE, AND HANDLING

Deliver doors, frames, and accessories undamaged and with protective wrappings or packaging. Strap knock-down frames in bundles. Provide temporary steel spreaders securely fastened to the bottom of each welded frame. Store doors and frames on platforms under cover in clean, dry, ventilated, and accessible locations, with 1/4 inch airspace between doors. Remove damp or wet packaging immediately and wipe affected surfaces dry. Replace damaged materials with new.

PART 2 PRODUCTS

2.1 STANDARD STEEL DOORS

SDI/DOOR A250.8, except as specified otherwise. Prepare doors to receive door hardware as specified in Section 08 71 00. Undercut where indicated. Exterior doors shall have top edge closed flush and sealed to prevent water intrusion. Doors shall be 1-3/4 inch thick, unless otherwise indicated. Provide exterior glazing in accordance with ASTM F2248 and ASTM E1300.

2.1.1 Classification - Level, Performance, Model

2.1.1.1 Heavy Duty Doors

SDI/DOOR A250.8, Level 2, physical performance Level B, Model 1, with core construction as required by the manufacturer for interior doors and for exterior doors, of size(s) and design(s) indicated. Where vertical stiffener cores are required, the space between the stiffeners shall be filled with mineral board insulation.

2.1.1.2 Extra Heavy Duty Doors

SDI/DOOR A250.8, Level 3, physical performance Level A, Model 1 with core construction as required by the manufacturer for indicated exterior doors, of size(s) and design(s) indicated. Provide Level 3 where indicated in door schedule.

2.2 INSULATED STEEL DOOR SYSTEMS

Insulated steel doors shall have a core of polyurethane foam and an R factor of 10.0 or more (based on a k value of 0.16); face sheets, edges, and frames of galvanized steel not lighter than 23 gage, 16 gage, and 16 gage respectively; magnetic weatherstripping; nonremovable-pin hinges; thermal-break aluminum threshold; and vinyl door bottom. Doors and frames shall receive phosphate treatment, rust-inhibitive primer, and baked acrylic enamel finish. Doors shall have been tested in accordance with SDI/DOOR A250.4 and shall have met the requirements for Level C. Prepare doors to receive specified hardware.Doors shall be 1-3/4 inch thick.

2.3 ACCESSORIES

2.3.1 Louvers

2.3.1.1 Interior Louvers

SDI/DOOR 111, Louvers shall be stationary sightproof type where scheduled. Detachable moldings on room or non security side of door; on security side of door, moldings to be integral part of louver. Form louver frames of 20 gage steel and louver blades of a minimum 24 gage. Sightproof louvers to be inverted "V" blade design with minimum 55 and inverted "Y" blade design with minimum 40 percent net-free opening.

2.3.1.2 Exterior Louvers

Louvers shall be inverted "Y" "V" or "Z" type with minimum of percent net-free opening as indicated in door schedule. Weld or tenon louver blades to continuous channel frame and weld assembly to door to form watertight assembly. Form louvers of hot-dip galvanized steel of same gage as door facings. Louvers shall have steel-framed insect and bird as indicated; screens shall be secured to room side and readily removable. Provide aluminum wire cloth, 18 by 18 or 18 by 16 inch mesh, for insect screens galvanized steel, 1/2 by 1/2 inch mesh hardware cloth, for bird screens. Net-free louver area to be before screening.

2.3.2 Astragals

For pairs of exterior steel doors which will not have aluminum astragals or removable mullions, as specified in Section 08 71 00 DOOR HARDWARE provide overlapping steel astragals with the doors.

2.3.3 Moldings

Provide moldings around glass of interior and exterior doors and louvers of interior doors. Provide nonremovable moldings on outside of exterior doors and on corridor side of interior doors. Other moldings may be stationary or removable. Secure inside moldings to stationary moldings, or provide snap-on moldings. Muntins shall interlock at intersections and shall be fitted and welded to stationary moldings.

2.4 INSULATION CORES

Insulated cores shall be of type specified, and provide an apparent U-factor of .48 in accordance with SDI/DOOR 113 and shall conform to:

a. Rigid Cellular Polyisocyanurate Foam: ASTM C591, Type I or II, foamed-in-place or in board form, with oxygen index of not less than 22 percent when tested in accordance with ASTM D2863; or

b. Rigid Polystyrene Foam Board: ASTM C578, Type I or II; or

c. Mineral board: ASTM C612, Type I.

2.5 STANDARD STEEL FRAMES

SDI/DOOR A250.8, Level 2 or 3 to match door except as otherwise specified. Form frames to sizes and shapes indicated, with welded corners. Provide steel frames for doors, transoms, sidelights, mullions, and interior glazed panels, unless otherwise indicated.

2.5.1 Welded Frames

Continuously weld frame faces at corner joints. Mechanically interlock or continuously weld stops and rabbets. Grind welds smooth.

Weld frames in accordance with the recommended practice of the Structural Welding Code Sections 1 through 6, AWS D1.1/D1.1M and in accordance with the practice specified by the producer of the metal being welded.

2.5.2 Mullions and Transom Bars

Mullions and transom bars shall be closed or tubular construction and be a member with heads and jambs butt-welded thereto. Bottom of door mullions shall have adjustable floor anchors and spreader connections.

2.5.3 Stops and Beads

Form stops and beads from 20 gage steel. Provide for glazed and other openings in standard steel frames. Secure beads to frames with oval-head, countersunk Phillips self-tapping sheet metal screws or concealed clips and fasteners. Space fasteners approximately 12 to 16 inch on center. Miter molded shapes at corners. Butt or miter square or rectangular beads at corners.

2.5.4 Cased Openings

Fabricate frames for cased openings of same material, gage, and assembly as specified for metal door frames, except omit door stops and preparation for hardware.

2.5.5 Anchors

Provide anchors to secure the frame to adjoining construction. Provide steel anchors, zinc-coated or painted with rust-inhibitive paint, not lighter than 18 gage.

2.5.5.1 Wall Anchors

Provide at least three anchors for each jamb. For frames which are more than 7.5 feet in height, provide one additional anchor for each jamb for each additional 2.5 feet or fraction thereof.

a. Masonry: Provide anchors of corrugated or perforated steel straps or 3/16 inch diameter steel wire, adjustable or T-shaped;

b. Stud partitions: Weld or otherwise securely fasten anchors to backs of frames. Design anchors to be fastened to closed steel studs with sheet metal screws, and to open steel studs by wiring or welding;

c. Completed openings: Secure frames to previously placed concrete or masonry with expansion bolts in accordance with SDI/DOOR 111; and

2.5.5.2 Floor Anchors

Provide floor anchors drilled for 3/8 inch anchor bolts at bottom of each jamb member. Where floor fill occurs, terminate bottom of frames at the indicated finished floor levels and support by adjustable extension clips resting on and anchored to the structural slabs.

2.6 FIRE AND SMOKE DOORS AND FRAMES

NFPA 80 and this specification. The requirements of NFPA 80 shall take precedence over details indicated or specified.

2.6.1 Labels

Fire doors and frames shall bear the label of Underwriters Laboratories (UL), Factory Mutual Engineering and Research (FM), or Warnock Hersey International (WHI) attesting to the rating required. Testing shall be in accordance with NFPA 252 or UL 10C. Labels shall be metal with raised letters, and shall bear the name or file number of the door and frame manufacturer. Labels shall be permanently affixed at the factory to frames and to the hinge edge of the door. Door labels shall not be painted.

2.6.2 Oversized Doors

For fire doors and frames which exceed the size for which testing and labeling are available, furnish certificates stating that the doors and frames are identical in design, materials, and construction to a door which has been tested and meets the requirements for the class indicated.

2.6.3 Astragal on Fire Doors

On pairs of labeled fire doors, conform to NFPA 80 and UL requirements.

2.7 WEATHERSTRIPPING

As specified in Section 08 71 00 DOOR HARDWARE.

2.7.1 Integral Gasket

Black synthetic rubber gasket with tabs for factory fitting into factory slotted frames, or extruded neoprene foam gasket made to fit into a continuous groove formed in the frame, may be provided in lieu of head and

jamb seals specified in Section 08 71 00 DOOR HARDWARE. Insert gasket in groove after frame is finish painted. Air leakage of weatherstripped doors shall not exceed 1.25 cubic feet per minute of air per square foot of door area when tested in accordance with ASTM E283.

2.8 HARDWARE PREPARATION

Provide minimum hardware reinforcing gages as specified in SDI/DOOR A250.6. Drill and tap doors and frames to receive finish hardware. Prepare doors and frames for hardware in accordance with the applicable requirements of SDI/DOOR A250.8 and SDI/DOOR A250.6. For additional requirements refer to ANSI/BHMA A156.115. Drill and tap for surface-applied hardware at the project site. Build additional reinforcing for surface-applied hardware into the door at the factory. Locate hardware in accordance with the requirements of SDI/DOOR A250.8, as applicable. Punch door frames , with the exception of frames that will have weatherstripping gasketing, to receive a minimum of two rubber or vinyl door silencers on lock side of single doors and one silencer for each leaf at heads of double doors. Set lock strikes out to provide clearance for silencers.

2.9 FINISHES

2.9.1 Factory-Primed Finish

All surfaces of doors and frames shall be thoroughly cleaned, chemically treated and factory primed with a rust inhibiting coating as specified in SDI/DOOR A250.8.

2.9.2 Hot-Dip Zinc-Coated and Factory-Primed Finish

Fabricate exterior doors and frames from hot dipped zinc coated steel, alloyed type, that complies with ASTM A924/A924Mand ASTM A653/A653M. The coating weight shall meet or exceed the minimum requirements for coatings having 0.4 ounces per square foot, total both sides, i.e., A40. Repair damaged zinc-coated surfaces by the application of zinc dust paint. Thoroughly clean and chemically treat to insure maximum paint adhesion. Factory prime as specified in SDI/DOOR A250.8.

2.9.3 Electrolytic Zinc-Coated Anchors and Accessories

Provide electrolytically deposited zinc-coated steel in accordance with ASTM A879/A879M, Commercial Quality, Coating Class A. Phosphate treat and factory prime zinc-coated surfaces as specified in SDI/DOOR A250.8.

2.10 FABRICATION AND WORKMANSHIP

Finished doors and frames shall be strong and rigid, neat in appearance, and free from defects, waves, scratches, cuts, dents, ridges, holes, warp, and buckle. Molded members shall be clean cut, straight, and true, with joints coped or mitered, well formed, and in true alignment. Dress exposed welded and soldered joints smooth. Design door frame sections for use with the wall construction indicated. Corner joints shall be well formed and in true alignment. Conceal fastenings where practicable. On wraparound frames for masonry partitions, provide a throat opening 1/8 inch larger than the actual masonry thickness.

2.10.1 Grouted Frames

For frames to be installed in exterior walls and to be filled with mortar

or grout, fill the stops with strips of rigid insulation to keep the grout out of the stops and to facilitate installation of stop-applied head and jamb seals. For exterior door frames coat interior surfaces of frame with bituminous paint as specificed in Part 3 below.

2.11 PROVISIONS FOR GLAZING

Materials are specified in Section 08 81 00, GLAZING.

PART 3 EXECUTION

3.1 INSTALLATION

3.1.1 Frames

Set frames in accordance with SDI/DOOR A250.11. Plumb, align, and brace securely until permanent anchors are set. Anchor bottoms of frames with expansion bolts or powder-actuated fasteners. Build in or secure wall anchors to adjoining construction. Where frames require ceiling struts or overhead bracing, anchor frames to the struts or bracing. Backfill exterior door frames with mortar. Coat inside of frames with(2)coats of corrosion-inhibiting bituminous material. For frames in exterior walls, ensure that stops are filled with rigid insulation before grout is placed.

3.1.2 Doors

Hang doors in accordance with clearances specified in SDI/DOOR A250.8. After erection and glazing, clean and adjust hardware.

3.1.3 Fire Doors and Frames

Install fire doors and frames, including hardware, in accordance with NFPA 80.

3.2 PROTECTION

Protect doors and frames from damage. Repair damaged doors and frames prior to completion and acceptance of the project or replace with new, as directed. Wire brush rusted frames until rust is removed. Clean thoroughly. Apply an all-over coat of rust-inhibitive paint of the same type used for shop coat.

3.2.1 Grouted Door Frames

Grout solid all exterior hollow metal door frames. Prior to grouting the frame coat inside surfaces of frame with (2) coats of corrosion-inhibiting bituminous material.

3.3 CLEANING

Upon completion, clean exposed surfaces of doors and frames thoroughly. Remove mastic smears and other unsightly marks.

-- End of Section --

SECTION 08 41 13

ALUMINUM-FRAMED ENTRANCES AND STOREFRONTS
11/16

PART 1 GENERAL

1.1 REFERENCES

The publications listed below form a part of this specification to the extent referenced. The publications are referred to within the text by the basic designation only.

AMERICAN ARCHITECTURAL MANUFACTURERS ASSOCIATION (AAMA)

AAMA 1503	(2009) Voluntary Test Method for Thermal Transmittance and Condensation Resistance of Windows, Doors and Glazed Wall Sections
AAMA 501	(2015) Methods of Test for Exterior Walls
AAMA 800	(2010) Voluntary Specifications and Test Methods for Sealants

AMERICAN SOCIETY OF CIVIL ENGINEERS (ASCE)

ASCE 7	(2010; Errata 2011; Supp 1 2013) Minimum Design Loads for Buildings and Other Structures

ASTM INTERNATIONAL (ASTM)

ASTM B221	(2014) Standard Specification for Aluminum and Aluminum-Alloy Extruded Bars, Rods, Wire, Profiles, and Tubes
ASTM E1105	(2015) Standard Test Method for Field Determination of Water Penetration of Installed Exterior Windows, Skylights, Doors, and Curtain Walls, by Uniform or Cyclic Static Air Pressure Difference
ASTM E1424	(1991; R 2016) Standard Test Method for Determining the Rate of Air Leakage Through Exterior Windows, Curtain Walls, and Doors Under Specified Pressure and Temperature Differences Across the Specimen
ASTM E1886	(2013a) Standard Test Method for Performance of Exterior Windows, Curtain Walls, Doors, and Impact Protective Systems Impacted by Missile(s) and Exposed to Cyclic Pressure Differentials
ASTM E283	(2004; R 2012) Determining the Rate of Air Leakage Through Exterior Windows, Curtain Walls, and Doors Under Specified Pressure Differences Across the Specimen

ASTM E330/E330M	(2014) Structural Performance of Exterior Windows, Doors, Skylights and Curtain Walls by Uniform Static Air Pressure Difference
ASTM E331	(2000; R 2016) Standard Test Method for Water Penetration of Exterior Windows, Skylights, Doors, and Curtain Walls by Uniform Static Air Pressure Difference
ASTM E783	(2002; R 2010) Standard Test Method for Field Measurement of Air Leakage Through Installed Exterior Windows and Doors
ASTM F1642	(2012) Standard Test Method for Glazing and Glazing Systems Subject to Airblast Loadings

BUILDERS HARDWARE MANUFACTURERS ASSOCIATION (BHMA)

ANSI/BHMA A156.10	(2011) Power Operated Pedestrian Doors
ANSI/BHMA A156.4	(2013) Door Controls - Closers

INTERNATIONAL CODE COUNCIL (ICC)

ICC IBC	(2015) International Building Code

U.S. GENERAL SERVICES ADMINISTRATION (GSA)

FS TT-P-645	(Rev C) Primer, Paint, Zinc-Molybdate, Alkyd Type

UNDERWRITERS LABORATORIES (UL)

UL 325	(2013; Reprint Feb 2016) UL Standard for Safety Door, Drapery, Gate, Louver, and Window Operators and Systems

1.2 ADMINISTRATIVE REQUIREMENTS

1.2.1 Pre-Installation Meetings

Conduct a meeting before installation begins to verify the project requirements, substrate conditions, manufacturer's installation instructions, and manufacturer's warranty requirements.

Within 30 days of the Contract Award, submit the following for review and approval by the Contracting Officer:

a. List of product installations

b. Sample warranty

c. Finish and color samples

d. Manufacturer's catalog data

Concurrently submit certified test reports showing compliance with specified performance characteristics and UL 325 for the following:

a. Wind Load (Resistance) in accordance with AAMA 501

b. Deflection in accordance with ASTM F1642

c. Condensation Resistance and Thermal Transmittance Performance Requirements in accordance with AAMA 1503

d. Water Infiltration in accordance with ASTM E331

e. Structural Requirements in accordance with ASTM F1642

1.3 SUBMITTALS

Government approval is required for submittals with a "G" designation; submittals not having a "G" designation are for Contractor Quality Control approval. Submit the following in accordance with Section 01 33 00 SUBMITTAL PROCEDURES:

SD-01 Preconstruction Submittals

Sample Warranty; G

List of Product Installations; G

SD-02 Shop Drawings

Installation Drawings; G

Fabrication Drawings; G

SD-03 Product Data

Manufacturer's Catalog Data; G

Finish; G

SD-04 Samples

Finish and Color Samples; G

SD-06 Test Reports

Certified Test Reports; G

Deflection

Air Infiltration

Condensation Resistance and Thermal Transmittance

Water Infiltration

SD-08 Manufacturer's Instructions

Manufacturer's Instructions

SD-11 Closeout Submittals

Manufacturer's Product Warranty

1.4 QUALITY CONTROL

1.4.1 Qualifications

1.4.1.1 Installer Qualifications

Provide documentation of the installer's experience in performing the work specified in this section.

Ensure that the installers have specialized in work similar to that required for this project, and that they are acceptable to product manufacturer.

1.4.1.2 Manufacturer Qualifications

Ensure that manufacturers meet the requirements specified in this section and project drawings.

Ensure that the manufacturer is capable of providing field service representation during construction, approving acceptable iinstallers and approving application methods.

1.4.2 Single-Source Responsibility

When aluminum entrances are part of a building enclosure system, that includes storefront framing, windows, a curtain wall system, and related products, provide building enclosure system products from a single-source manufacturer.

Use a single source manufacturer with sole responsibility for providing design, structural engineering, and custom fabrication for door portal systems and for supplying components, materials, and products. Do not use products provided from numerous sources for assembly at the site. Ensure that the following work items and components are fabricated or supplied by a single source are:

a. Door assemblies to be installed in door portals as specified in this section.

b. Door operating hardware to be installed on or within door portals as specified in Section 08 71 00 DOOR HARDWARE.

c. Glass as specified in Section 08 81 00 GLAZING.

1.5 DELIVERY, STORAGE, AND HANDLING

1.5.1 Ordering

To avoid construction delays, comply with the manufacturer's lead-time requirements and instructions for ordering.

1.5.2 Packing, Shipping, Handling and Unloading

Deliver materials in the manufacturer's original, unopened, undamaged containers with identification labels intact.

1.5.3 Storage and Protection

Store materials in a way that protects them from exposure to harmful weather conditions. Avoid damaging the storefront material and components during handling. Protect storefront material against damage from elements, construction activities, and other hazards before, during, and after storefront installation.

Do not use adhesive papers or sprayed coatings that become firmly bonded when exposed to sunlight. Do not leave coating residue on surfaces.

1.6 PROJECT / SITE CONDITIONS

1.6.1 Field Measurements

Verify actual measurements or openings by taking field measurements before fabrication; record these measurements on shop drawings. To avoid construction delays, coordinate field measurements, and fabrication schedule with construction progress.

1.7 WARRANTY

Provide a written manufacturer's warranty, executed by a company official, warranting against defects in materials and products for 2 years from the date of shipment. Warrant that the door corner construction is for the life of the project. Provide a written installer's warranty, warranting work to be watertight and free from defective materials, defective workmanship, and glass breakage as a result of defective design, and agreeing to replace components that fail within 2 years.

The warranty states the following:

a. Watertight and airtight system installation is completed within specified tolerances.

b. The completed installation remains free of rattles, wind whistles and noise caused by thermal movement and wind pressure.

c. System is structurally sound and free from distortion.

d. Glass and glazing gaskets will not break or "pop" from frames as a result of design, wind load pressure, movement caused by expansion or contraction, or structural loading.

e. Glazing sealants and gaskets remain free of abnormal deterioration or dislocation as a result of sunlight, weather, or oxidation.

Provide written warranty stating that the organic coating finish will not fade more than 10 percent or show chalking, yellowing, peeling, cracking, pitting, corroding or variations in color, or gloss deterioration beyond the manufacturer's descriptive standards for 10 years from the shipment date and agreeing to promptly correct defects.

Provide a written thermal integrity warranty for 10 years from ship date against thermal barrier system failure resulting from the following:

a. Longitudinal and transverse thermal barrier shrinkage.

b. Thermal barrier cracking.

c. Structural failure of the thermal barrier material.

d. Loss of adhesion or loss of prescribed edge pressure on glazing material, resulting in excessive air and water infiltration.

PART 2 PRODUCTS

2.1 SYSTEM DESCRIPTION

Provide aluminum entrances, with glass and glazing, door hardware, and components.

Aluminum entrances include impact resistance entrances; medium stile, 3 1/2 inch vertical face dimension, 1 3/4 inch depth, for interior structural silicone glaze, for high-traffic/impact-resistant applications.

2.1.1 Design Requirements for Aluminum (Entrances and Components)

Provide a door portal system designed to withstand the following loads without breakage, loss, failure of seals, product deterioration, or other defects.

a. Dead and Live Loads: Determined by ASCE 7 and calculated in accordance with applicable codes.

b. Seismic Loads: Design and install the system to comply with the seismic requirements for the project location in accordance with Section 1613 of the International Building Code, ICC IBC.

c. Wind Loads: Design and install the system so that the effects of wind load acting inward and outward normal to the plane of the wall are in accordance with ASTM E330/E330M.

d. Thermal Loads And Movement:

(1) Ambient Temperature Range: 120 degrees F

(2) Material Surfaces Range: 180 degrees F

e. Water and Air Resistance: Provide weatherstripping, exterior gaskets, sealants, and other accessories to resist water and air penetration.

f. Impact-Protective Systems Provide an impact-protective system in accordance with ASTM E1886.

2.1.1.1 Material Standard

ASTM B221; 6063-T5 alloy and tempered.

Provide door stile and rail face dimensions of the entrance doors as follows:

Vertical Stile	Top Rail	Bottom Rail
3-1/2 inches	3-1/2 inches	6-1/2 inches

Provide major portions of the door members at 0.125 inches nominal in

thickness and glazing molding at 0.050 inches thick.

2.1.1.2 Sealants

Provide either ethylene propylene diene monomer (EPDM) elastomeric extrusions or thermoplastic elastomer glazing gaskets. Structural silicone sealant is required.

Internal Sealants: Provide sealants that according to the manufacturer will remain permanently elastic, tacky, non-drying, non-migrating, and weather tight.

2.1.1.3 Thermal Barrier

Use a rigid, structural thermal barrier to separate all exterior aluminum from interior aluminum. For purposes of this specification, a structural thermal barrier is defined as a system that transfers shear during bending and, therefore, promotes composite action between the exterior and interior extrusions. Do not use a nonstructural thermal barrier. Ensure that the thermal barrier provides a structural connection between the two sides of the door.

2.2 FABRICATION

Provide the following information when submitting fabrication drawings for custom fabrications:

a. Indicate elevations, detailed design, dimensions, member profiles, joint locations, arrangement of units, and member connections.

b. Show the following items:

(1) Details of special shapes.

(2) Reinforcing.

(3) Anchorage system.

(4) Interfacing with building construction.

(5) Provisions for expansion and contraction.

(6) Thermal breaks.

c. Indicate typical glazing details, and internal sealant requirements as recommended by the sealant manufacturer.

d. Clearly indicate locations of exposed fasteners and joints.

e. Clearly show where and how the manufacturer's system deviates from Contract drawings and these specifications.

2.2.1 Entrance System Fabrication

Provide door corner construction consisting of mechanical clip fastening, SIGMA deep penetration plug welds and 1 1/8 inch long fillet welds inside and outside all four corners. Provide a hook-in type exterior glazing stop with EPDM glazing gaskets reinforced with non-stretchable cord. Provide an interior glazing stop that is mechanically fastened to the door

member and that incorporates a silicone-compatible spacer used with silicone sealant.

Accurately fit and secure joints and corners. Make joints hairline in appearance. Remove burrs and smooth edges. Prepare components with internal reinforcement for door hardware. Arrange fasteners and attachments so that they are concealed from view.

Separate dissimilar metals with protective coating or pre-formed separators in order to prevent contact and corrosion.

2.2.2 Shop Assembly

Fabricate and assemble units with joints only at the intersection of aluminum members with hairline joints; rigidly secure these units, and seal them in accordance with the manufacturer's recommendations.

2.2.2.1 Welding

Conceal welds on aluminum members in accordance with AWS recommendations or methods recommended by the manufacturer. Members showing welding bloom or discoloration on finish or material distortion will be rejected by the Contacting Officer.

2.2.3 Finish

Provide aluminum storfront entry and windows with a 70% PVDF finish, 1.2 mils thickness, color Slate Gray, BM 2133-40 Pantone 444, Federal Standard 36173 complyng with AAMA 2605.

2.2.4 Fabrication Tolerance

Fabricate and assemble units with joints only at intersection of aluminum members with hairline joints; rigidly secure these units, and seal them in accordance with the manufacturer's recommendations.

Fabricate aluminum entrances in accordance with the entrance manufacturer's prescribed tolerances.

2.2.4.1 Material Cuts

Square to 1/32 inch off square, over largest dimension; proportionate amount of 1/32 inch on the two dimensions.

2.2.4.2 Maximum Offset at Consecutive Members

1/64 inch in alignment between two consecutive members in line, end to end.

2.2.4.3 Maximum Offset at Glazing Pocket Corners

1/64 inch between framing members at glazing pocket corners.

2.2.4.4 Joints

Between adjacent members in same assembly: Joints are hairline and square to the adjacent member.

2.2.4.5 Variation

In squaring diagonals for doors and fabricated assemblies: 1/16 inch.

2.2.4.6 Flatness

For doors and fabricated assemblies: plus/minus 1/16 inch of neutral plane.

2.3 MATERIALS

2.3.1 Sealants

Refer to Section 07 92 00 JOINT SEALANTS. Ensure that all sealants conform to AAMA 800.

2.3.2 Glass

Refer to Section 08 81 00 GLAZING.

2.4 ACCESSORIES

2.4.1 Fasteners

Provide stainless steel fasteners in areas where the fasteners are exposed.

Use non-corrosive and compatible fasteners with components being fastened. Do not use exposed fasteners, except where unavoidable for application of hardware.

In areas where fasteners are not exposed, use aluminum, non-magnetic stainless steel, or other materials warranted by the manufacturer.

For exposed locations, provide countersunk Phillips head screws when items with a matching finish are fastened. For concealed locations, provide the manufacturer's standard fasteners.

Provide nuts or washers that have been designed with a means to prevent disengagement; do not deform fastener threads.

2.4.2 Perimeter Anchors

When steel anchors are used, provide insulation between steel material and aluminum material in order to prevent galvanic action.

2.4.2.1 Inserts and Anchorage Devices

Provide manufacturer's standard formed or fabricated assemblies, steel or aluminum, of shapes, plates, bars, or tubes. Shop-coat steel assemblies after fabrication with an alkyd zinc chromate primer complying with FS TT-P-645.

2.4.3 Standard Entrance Hardware

2.4.3.1 Weatherstripping

Equip meeting stiles on pairs of doors with an adjustable astragal using wool pile with a polymeric fin.

Provide door weatherstripping on a single-acting offset pivot or butt-hung door and frame (single or pairs) consisting of a thermoplastic elastomer weatherstripping on a tubular shape with a semi-rigid polymeric backing.

Provide sill-sweep strips: Provide an EPDM blade gasket sweep strip in an aluminum extrusion applied to the interior exposed surface of the bottom rail with concealed fasteners. (Provide as necessary to meet specified performance tests.)

2.4.3.2 Threshold

Provide an extruded aluminum threshold, one piece per door opening, with ribbed surface.

2.4.3.3 Offset Pivots

Provide the manufacturer's standard top and bottom pivots with one intermediate offset pivot.

2.4.3.4 Panic Device

Provide the manufacturer's recommended standard panic hardware.

2.4.3.5 Closer

Provide a surface closer in accordance with ANSI/BHMA A156.4.

2.4.3.6 Security Lock or Dead Lock

See Section 08 71 00 DOOR HARDWARE for door lock device information.

2.4.3.7 Cylinder(s)/Thumb-turn

Provide the manufacturer's recommended standard.

2.4.3.8 Cylinder Guard

Provide the manufacturer's recommended standard.

PART 3 EXECUTION

3.1 EXAMINATION

3.1.1 Site Verification of Conditions

Verify that the condition of substrate previously installed under other sections is acceptable for product installation in accordance with the manufacturer's instructions.

Verify that openings are sized to receive the storefront system and that the sill plate is level in accordance with the manufacturer's acceptable tolerances.

3.2 PREPARATION

Field-verify dimensions before fabricating components for the door portal assembly.

Coordinate requirements for locations of blockouts for anchorage of door portal columns and other embedded components with Section 03 30 00 CAST-IN-PLACE CONCRETE.

Coordinate the erection of door portal with installation of surrounding glass wall and door assemblies. Ensure that the door portals can provide support and anchorage for assembly components.

Coordinate electrical requirements for electrified door hardware to ensure proper power source, conduit, wiring, and boxes.

3.2.1 Adjacent Surfaces Protection

Protect adjacent work areas and finish surfaces from damage during product installation.

3.2.2 Aluminum Surface Protection

Protect aluminum surfaces from contact with lime, mortar, cement, acids, and other harmful contaminants.

3.3 INSTALLATION

Submit installation drawings for review and approval.

Install the entrance system in accordance with the manufacturer's instructions and the AAMA storefront and entrance guide specifications manual. Attach the entrance system to the structure, allowing it to be adjusted to accommodate construction tolerances and other irregularities. Provide alignment attachments and shims to permanently fasten the system to the building structure. Align the assembly so that it is plumb and level, and free of warp and twist. Maintain assembly dimensional tolerances aligning with adjacent work.

Set thresholds in a bed of mastic and secure the thresholds. Protect aluminum members in contact with masonry, steel, concrete, or dissimilar materials using nylon pads or a bituminous coating. Shim and brace the aluminum system before anchoring the system to the structure. Verify that weep holes are open, and the metal joints are sealed in accordance with the manufacturer's installation instructions. Seal metal-to-metal joints using a sealant recommended by the system manufacturer.

3.3.1 Tolerances

Ensure that tolerances for wall thickness and other cross-sectional dimensions of entrance members are nominal and in compliance with Aluminum Standards and Data, published by the Aluminum Association.

3.3.2 Adjusting

Adjust operating hardware for smooth operation, and as recommended by the manufacturer.

3.3.3 Related Products Installation Requirements

3.3.3.1 Sealants (Perimeter)

Refer to Section 07 92 00 JOINT SEALANTS.

3.3.3.2 Glass

Refer to Section 08 81 00 GLAZING.

3.4 FIELD QUALITY CONTROL

3.4.1 Air Infiltration

Test air infiltration in accordance with ASTM E783

Submit certified test reports showing compliance with specified performance characteristics as follows:

a. For single-acting offset pivot, butt hung, or continuous geared hinge entrances in the closed and locked position, test the specimen in accordance with ANSI/BHMA A156.10, and ASTM E283 at a pressure differential of 1.57 psf for pairs of doors; ensure that maximum infiltration for a pair of 7 foot by 8 foot entrance doors and frame is 1.2 cfm/square foot.

b. Ensure the maximum allowable infiltration for a completed storefront system does not exceed 0.06 cfm/square foot when tested in accordance with ASTM E1424 at a differential static pressure of 6.24 psf.

3.4.2 Wind Loads

Provide a completed storefront system capable of withstanding wind pressure loads, normal to the wall plane indicated, as follows:

a. Exterior Walls

(1) Positive Pressure: 45 psf

(2) Negative Pressure: 45 psf

b. Interior Walls: (pressure acting in either direction) 20 psf

3.4.3 Deflection

Submit certified test reports showing that the maximum allowable deflection in a member when tested in accordance with ASTM E330/E330M with allowable stress is L/175 or 3/4 inches maximum.

3.4.4 Condensation Resistance and Thermal Transmittance

Submit certified test reports showing compliance with specified performance characteristics as follows:

a. U-Value Requirements:

(1) Perform test in accordance with the AAMA 1503 procedure and on the configuration specified therein.

(2) Thermal Transmittance ("U" Value) maximum 0.65 (6250) BTU/hr/sf/deg F at 15 mph exterior wind.

b. CRF Class Requirements:

(1) Perform a test in accordance with AAMA 1503.

(2) Condensation Resistance Factor Requirements (CRF) minimum 56.

3.4.5 Water Infiltration

Submit certified test reports showing that the system is designed to provide no uncontrolled water when tested in accordance with ASTM E1105 at a static pressure of 8 psf.

3.5 ADJUSTING AND CLEANING

3.5.1 Protection

Protect the installed product's finish surfaces from damage during construction. Protect the aluminum storefront system from damage from grinding and polishing compounds, plaster, lime, acid, cement, or other harmful contaminants.

3.5.2 Cleaning

Repair or replace damaged installed products. Clean installed products in accordance with manufacturer's instructions before acceptance remove excess mastic, mastic smears, and other foreign materials. Remove construction debris from the project site and legally dispose of this debris.

3.6 WARRANTY

Submit three signed copies of the manufacturer's product warranty for the entrance system as follows:

a. Warranty Period: Five years from Date of Substantial Completion of the project, provided that the Limited Warranty begins no later than six months from the date of shipment by the manufacturer. In addition, support welded door corner construction with a limited lifetime warranty for the life of the door under normal use.

Ensure that the Warranty's language is identical to the "As Approved" version of the sample warranty submitted to and returned from the Contracting Officer.

-- End of Section --

THIS PAGE HAS BEEN INTENTIONALLY LEFT BLANK

SECTION 08 51 13

ALUMINUM WINDOWS
05/11

PART 1 GENERAL

1.1 REFERENCES

The publications listed below form a part of this specification to the extent referenced. The publications are referred to within the text by the basic designation only.

AMERICAN ARCHITECTURAL MANUFACTURERS ASSOCIATION (AAMA)

AAMA 1503	(2009) Voluntary Test Method for Thermal Transmittance and Condensation Resistance of Windows, Doors and Glazed Wall Sections
AAMA 2603	(2015) Voluntary Specification, Performance Requirements and Test Procedures for Pigmented Organic Coatings on Aluminum Extrusions and Panels
AAMA/WDMA/CSA 101/I.S.2/A440	(2011; Update 1 2014) North American Fenestration Standard/Specification for Windows, Doors, and Skylights

ASTM INTERNATIONAL (ASTM)

ASTM E1300	(2016) Standard Practice for Determining Load Resistance of Glass in Buildings
ASTM F1642	(2012) Standard Test Method for Glazing and Glazing Systems Subject to Airblast Loadings
ASTM F2248	(2012) Standard Practice for Specifying an Equivalent 3-Second Duration Design Loading for Blast Resistant Glazing Fabricated with Laminated Glass

NATIONAL FENESTRATION RATING COUNCIL (NFRC)

NFRC 100	(2014) Procedure for Determining Fenestration Product U-Factors
NFRC 200	(2014) Procedure for Determining Fenestration Product Solar Heat Gain Coefficient and Visible Transmittance at Normal Incidence

1.2 CERTIFICATION

Each prime window unit must bear the AAMA Label warranting that the product complies with AAMA/WDMA/CSA 101/I.S.2/A440. Certified test reports attesting that the prime window units meet the requirements of AAMA/WDMA/CSA 101/I.S.2/A440, including test size, will be acceptable in

lieu of product labeling.

1.3 SUBMITTALS

Government approval is required for submittals with a "G" designation; submittals not having a "G" designation are for Contractor Quality Control approval. Submit the following in accordance with Section 01 33 00 SUBMITTAL PROCEDURES:

SD-02 Shop Drawings

Windows; G

Fabrication Drawings

SD-03 Product Data

Windows; G

Hardware; G

Fasteners; G

Window Performance; G

Thermal-Barrier Windows; G

Mullions; G
Accessories; G

Adhesives

Thermal Performance; G

SD-04 Samples

Finish Sample

Window Sample

SD-05 Design Data

Structural Calculations for Deflection; G

Design Analysis; G

Submit design analysis with calculations showing that the design of each different size and type of aluminum window unit and its anchorage to the structure meets the minimum antiterrorism standards required by paragraph "Minimum Antiterrorism Performance", unless conformance is demonstrated by Standard Airblast Test results. Calculations verifying the structural performance of each window proposed for use, under the given loads, must be prepared and signed by a registered Professional Engineer. The window components and anchorage devices to the structure, as determined by the design analysis, must be reflected in the shop drawings.

SD-06 Test Reports

Minimum Condensation Resistance Factor

Standard Airblast Test; G

In lieu of a Design Analysis, results of airblast testing, whether by arena test or shocktube, must be included in a test report, providing information in accordance with ASTM F1642, as prepared by the independent testing agency performing the test. The test results must demonstrate the ability of each window proposed for use to withstand the airblast loading parameters and achieve the hazard level rating prescribed by UFC 4-010-01.

SD-10 Operation and Maintenance Data

Windows, Data Package 1; G

Submit in accordance with Section 01 78 23 OPERATION AND MAINTENANCE DATA.

Plastic Identification

When not labeled, identify types in Operation and Maintenance Manual.

SD-11 Closeout Submittals

Recycled Content of Aluminum Windows; S

1.4 QUALITY ASSURANCE

1.4.1 Shop Drawing Requirements

Provide drawings that indicate elevations of windows, full-size sections, thickness and gages of metal, fastenings, proposed method of anchoring, size and spacing of anchors, details of construction, method of glazing, mullion details, method and materials for weatherstripping,material and method of attaching subframes, installation details, and other related items.

1.4.2 Sample Requirements

1.4.2.1 Finish Sample Requirements

Submit color chart of standard factory color coatings when factory-finish color coating is to be provided.

1.4.2.2 Window Sample Requirements

Submit one full-size corner of each window type proposed for use. Where screens or weatherstripping is required, fit sample with such items that are to be used.

1.4.3 Design Data Requirements

Submit calculations to substantiate compliance with deflection requirements

and Minimum Antiterrorism Performance criteria. A registered Professional Engineer must provide calculations.

Submit design analysis with calculations showing that the design of each different size and type of aluminum window unit and its anchorage to the structure meets the requirements of paragraph "Minimum Antiterrorism Performance Criteria". Calculations verifying the structural performance of each window proposed for use, under the given loads, must be prepared and signed by a registered professional engineer. Reflect the window components and anchorage devices to the structure, as determined by the design analysis, in the shop drawings.

1.4.4 Test Report Requirements

Submit test reports for each type of window attesting that identical windows have been tested and meet the requirements specified herein for conformance to AAMA/WDMA/CSA 101/I.S.2/A440 including test size, and minimum condensation resistance factor (CRF), and, for Minimum Antiterrorism windows, in lieu of a Design Analysis, results of a Standard Airblast Test.

1.5 DELIVERY AND STORAGE

Deliver windows to project site in an undamaged condition. Use care in handling and hoisting windows during transportation and at the jobsite. Store windows and components out of contact with the ground, under a weathertight covering, so as to prevent bending, warping, or otherwise damaging the windows. Repair damaged windows to an "as new" condition as approved. If windows can not be repaired, provide a new unit.

1.6 PROTECTION

Protect finished surfaces during shipping and handling using the manufacturer's standard method. Do not apply coatings or lacquers to surfaces to which caulking and glazing compounds must adhere.

1.7 PLASTIC IDENTIFICATION

Label plastic products provided to indicate their polymeric composition according to the following list. Where products are not labeled, provide product data indicating polymeric information in Operation and Maintenance Manual.

a. Type 1: Polyethylene Terephthalate (PET, PETE).

b. Type 2: High Density Polyethylene (HDPE).

c. Type 3: Vinyl (Polyvinyl Chloride or PVC).

d. Type 4: Low Density Polyethylene (LDPE).

e. Type 5: Polypropylene (PP).

f. Type 6: Polystyrene (PS).

g. Type 7: Other. Use of this code indicates that the package in question is made with a resin other than the six listed above, or is made of more than one resin listed above, and used in a multi-layer combination.

1.8 FIELD MEASUREMENTS

Take field measurements prior to preparation of the drawings and fabrication.

1.9 PERFORMANCE REQUIREMENTS

1.9.1 Wind Loading Design Pressure

Design window components, including mullions, hardware, and anchors, to withstand a wind-loading design pressure of at least 50 pounds per square foot (psf).

1.9.2 Tests

Test windows proposed for use in accordance with AAMA/WDMA/CSA 101/I.S.2/A440 for the particular type and quality window specified.

Perform tests by a nationally recognized independent testing laboratory equipped and capable of performing the required tests. Submit the results of the tests as certified laboratory reports required herein.

Minimum design load for a uniform-load structural test must be 50 psf.

1.10 DRAWINGS

Submit the Fabrication Drawings for aluminum window units showing complete window assembly including hardware, weatherstripping, and subframe assembly details.

1.11 WINDOW PERFORMANCE

Aluminum windows must meet the following performance requirements. Perform testing requirements by an independent testing laboratory or agency.

1.11.1 Structural Performance

Structural test pressures on window units must be for positive load (inward) and negative load (outward). After testing, there will be no glass breakage, permanent damage to fasteners, hardware parts, support arms or actuating mechanisms or any other damage which could cause window to be inoperable. There must be no permanent deformation of any main frame, sash or ventilator member in excess of the requirements established by AAMA/WDMA/CSA 101/I.S.2/A440 for the window types and classification specified in this section.

1.11.2 Minimum Antiterrorism Performance

Windows must meet the minimum antiterrorism performance of UFC 4-010-01, as specified in the paragraphs below. Conformance to the performance requirements must be validated by one of the following methods.

1.11.2.1 Computational Design Analysis Method

Window frames, mullions, and sashes must be designed to the criteria listed herein. Computational design analysis must include calculations

verifying the structural performance of each window proposed for use, under the given static equivalent loads.

Aluminum window framing members must restrict deflections of the edges of glazing they support to L/60 under two times (2X) the glazing resistance per the requirements of ASTM F2248 and ASTM E1300. Glazing resistance must be greater than equivalent 3-second duration loading of 50 pounds per square foot (psf. L denotes the length of the glazing supported edge. (L is to be based on edge length of glazing in frame and not on the distance between anchors that fasten frame to the structure.)

The glazing frame bite for the window frames must be in accordance with ASTM F2248.

Window frames must be anchored to the supporting structure with anchors designed to resist two times (2X) the glazing resistance in accordance with ASTM F2248 and ASTM E1300.

1.11.2.2 Alternate Dynamic Design Analysis Method

As an alternative to the static equivalent load design approach described above, window framing members, anchors, and glazing may be designed using a dynamic analysis to prove the window system will provide performance equivalent to or better than a very low hazard rating in accordance with ASTM F1642 associated with the applicable low level of protection for the project.

1.11.2.3 Standard Airblast Test Method

As an alternative to either of the Computational Design Analysis Methods, each Minimum Antiterrorism window type must be tested for evaluation of hazards generated from airblast loading in accordance with ASTM F1642 by an independent testing agency regularly engaged in blast testing. For proposed window systems that are of the same type as the tested system but of different size, the test results may be accepted provided the proposed window size is within the range from 25 percent smaller to 10 percent larger in area, than the tested window. Proposed windows of a size outside this range require testing to evaluate their hazard rating. Testing may be by shocktube or arena test. The test must be performed on the entire proposed window system, to include, but not be limited to, the glazing, its framing system, operating devices, and all anchorage devices. Anchorage of the window frame or subframe must replicate the method of installation to be used for the project. The minimum airblast loading parameters for the test must be as follows: Peak positive pressure of 40 kPa and positive phase impulse of 285 kPa-msec. The hazard rating for the proposed window systems, as determined by the rating criteria of ASTM F1642, must not exceed the "Very Low Hazard" rating (i.e. the "No Break", "No Hazard", "Minimal Hazard" and "Very Low Hazard" ratings are acceptable. "Low Hazard" and "High Hazard" ratings are unacceptable). Results of window systems previously tested by test protocols other than ASTM F1642 may be accepted provided the required loading, hazard level rating, and size limitations stated herein are met.

1.11.3 Air Infiltration

Air infiltration must not exceed the amount established by AAMA/WDMA/CSA 101/I.S.2/A440 for each window type.

1.11.4 Water Penetration

Water penetration must not exceed the amount established by AAMA/WDMA/CSA 101/I.S.2/A440 for each window type.

1.11.5 Thermal Performance

Non-residential aluminum windows (including frames and glass) must be certified by the National Fenestration Rating Council with a whole-window Solar Heat Gain Coefficient (SHGC) maximum of 0.25 determined according to NFRC 200 procedures and a U-factor maximum of 0.65 Btu/hr-ft^2-F in accordance with NFRC 100.

1.11.6 Sound Attenuation

See the required STC rating as noted in section 08 81 00 Glazing, paragraph entitled, INSULATED GLASS UNITS.

1.12 QUALIFICATION

Window manufacturer must specialize in designing and manufacturing the type of aluminum windows specified in this section, and have a minimum of 10 years of documented successful experience. Manufacturer must have the facilities capable of meeting contract requirements, single-source responsibility and warranty.

1.13 WARRANTY

Provide Manufacturer's standard performance guarantees or warranties that extend beyond a 1 year period.

PART 2 PRODUCTS

2.1 PRODUCT SUSTAINABILITY CRITERIA

For products in this section, where applicable and to extent allowed by performance criteria, provide and document the following:

2.1.1 Recycled content of Aluminum Windows

Provide aluminum window frames meeting the recycled content requirements as stated within this section and provide documentation in accordance with Section 01 33 29 SUSTAINABILITY REPORTING paragraph RECYCLED CONTENT.

2.2 WINDOWS

Provide prime windows that comply with AAMA/WDMA/CSA 101/I.S.2/A440 and the requirements specified herein. In addition to compliance with AAMA/WDMA/CSA 101/I.S.2/A440, window framing members for each individual light of glass must not deflect to the extent that deflection perpendicular to the glass light exceeds L/175 of the glass edge length when subjected to uniform loads at specified design pressures. Provide Structural calculations for deflection to substantiate compliance with deflection requirements. Provide windows of types, performance classes, performance grades, combinations, and sizes indicated or specified. Provide aluminum window frames with a minimum recycled content of 20 percent. Design windows to accommodate hardware, glass, weatherstripping, screens, and accessories to be furnished. Each window must be a complete factory assembled unit with or without glass installed. Dimensions shown are minimum. Provide windows with insulating glass and thermal break

necessary to achieve a minimum Condensation Resistance Factor (CRF) of 60 when tested in accordance with AAMA 1503.

2.2.1 Fixed Windows (F)

All exterior windows for P1481 and P1482 are fixed windows with no opterative sashes.

2.2.2 Glass and Glazing

Materials are specified in Section 08 81 00 GLAZING.

2.2.3 Caulking and Sealing

Are specified in Section 07 92 00 JOINT SEALANTS.

2.2.4 Weatherstripping

AAMA/WDMA/CSA 101/I.S.2/A440.

2.3 FABRICATION

Fabrication of window units must comply with AAMA/WDMA/CSA 101/I.S.2/A440.

2.3.1 Provisions for Glazing

Design windows and rabbets suitable for glass thickness specified in Section 08 81 00 GLAZING. For minimum antiterrorism windows, attach glazing to its supporting frame using structural silicone sealant or adhesive glazing tape in accordance with ASTM F2248. Design for inside double glazing and for securing glass with glazing channels.

2.3.2 Fasteners

Use window manufacturer's standard for windows, trim, and accessories. Self-tapping sheet-metal screws are not acceptable for material more than 1/16 inch thick.

2.3.3 Adhesives

Provide joint sealants as specified in Section 07 92 00 JOINT SEALANTS. For interior application of joint sealants, comply with applicable regulations regarding reduced VOC's, and as specified in Section 07 92 00 JOINT SEALANTS.

2.3.4 Drips and Weep Holes

Provide continuous drips over heads of top ventilators. Where fixed windows adjoin ventilators, drips must be continuous across tops of fixed windows. Provide drips and weep holes as required to return water to the outside.

2.3.5 Combination Windows

Windows used in combination must be factory assembled of the same class and grade. Where factory assembly of individual windows into larger units is limited by transportation considerations, prefabricate, match mark, transport, and field assemble.

2.3.6 Mullions and Transom Bars

Provide mullions between multiple window units to resist two times (2X) glazing resistance in accordance with ASTM F2248 and ASTM E1300. Provide mullions with a thermal break. Secure mullions and transom bars to adjoining construction and window units in such a manner as to permit expansion and contraction and to form a weathertight joint. Provide special covers over structural support at mullions as required to meet ATFP requirements.

2.3.7 Accessories

Provide windows complete with necessary hardware, fastenings, clips, fins, anchors, glazing beads, and other appurtenances necessary for complete installation and proper operation. Furnish extruded aluminum subframe receptors and subsill with each window unit.

2.3.7.1 Hardware

AAMA/WDMA/CSA 101/I.S.2/A440. The item, type, and functional characteristics must be the manufacturer's standard for the particular window type. Provide hardware of suitable design and of sufficient strength to perform the function for which it is used. Equip all operating ventilators with a lock or latching device which can be secured from the inside.

2.3.7.2 Fasteners

Provide concealed anchors of the type recommended by the window manufacturer for the specific type of construction. Anchors and fasteners must be compatible with the window and the adjoining construction. Provide a minimum of three anchors for each jamb located approximately 6 inches from each end and at midpoint.

2.3.7.3 Window Anchors

Anchoring devices for installing windows must be made of aluminum, cadmium-plated steel, stainless steel, or zinc-plated steel conforming to AAMA/WDMA/CSA 101/I.S.2/A440.

2.3.8 Finishes

Exposed aluminum surfaces must be factory finished with an or organic coating. Color must be Slate Grade to match existing windows at the MARSOC campus; see Section 08 41 13 Aluminum-Framed Entrances and Storefronts for color finish description. All windows for each building must have the same finish.

2.3.8.1 Organic Coating

Clean and prime exposed aluminum surfaces. Provide a baked enamel finish in accordance with AAMA 2603 with total dry film thickness not less than 0.8 mil.

2.4 THERMAL-BARRIER WINDOWS

Provide thermal-barrier windows, complete with accessories and fittings, where indicated.

Specify material and construction except as follows:

a. Aluminum alloy must be 6063-T6.

b. Frame construction, including operable sash, must be factory-assembled and factory-sealed inner and outer aluminum completely separated from metal-to-metal contact. Join assembly by a continuous, concealed, low conductance divider housed in an interlocking extrusion of the inner frame. Metal fasteners, straps, or anchors must not bridge the connection between the inner and outer frame.

c. Operating hardware for each sash must consist of spring-loaded nylon cushion blocks and pin locks designed to lock in predetermined locations.

d. Sash must be completely separated from metal-to-metal contact by means of woven-pile weatherstripping, plastic, or elastomeric separation members.

e. Operating and storm sash must be factory-glazed with the type of glass indicated and of the quality specified in Section 08 81 00 GLAZING.

2.5 MULLIONS

Provide mullions between multiple-window units where indicated.

Provide profiles for mullions and mullion covers, reinforced as required for the specified wind loading, and securely anchored to the adjoining construction. Mullion extrusion will include serrations or pockets to receive weatherstripping, sealant, or tape at the point of contact with each window flange.

Mullion assembly must include aluminum window clamps or brackets screwed or bolted to the mullion and the mullion cover.

Mullion cover must be screw-fastened to the mullion unless otherwise indicated.

Mullion reinforcing members must be fabricated of the materials specified in AAMA/WDMA/CSA 101/I.S.2/A440 and meet the specified design loading.

PART 3 EXECUTION

3.1 INSTALLATION

3.1.1 Method of Installation

Install in accordance with the window manufacturer's printed instructions and details. Build in windows as the work progresses or install without forcing into prepared window openings. Set windows at proper elevation, location, and reveal; plumb, square, level, and in alignment; and brace, strut, and stay properly to prevent distortion and misalignment. Protect ventilators and operating parts against accumulation of dirt and building materials by keeping ventilators tightly closed and locked to frame. Bed screws or bolts in sill members, joints at mullions, contacts of windows with sills, built-in fins, and subframes in mastic sealant of a type recommended by the window manufacturer. Install and caulk windows in a manner that will prevent entrance of water and wind. Fasten insect screens securely in place.

Any materials that show visual evidence of biological growth due to the presence of moisture must not be installed on the building project.

3.1.2 Dissimilar Materials

Where aluminum surfaces are in contact with, or fastened to masonry, concrete, wood, or dissimilar metals, except stainless steel or zinc, protect the aluminum surface from dissimilar materials as recommended in the Appendix to AAMA/WDMA/CSA 101/I.S.2/A440. Do not coat surfaces in contact with sealants after installation with any type of protective material.

3.1.3 Anchors and Fastenings

Make provision for securing units to each other, to masonry, and to other adjoining construction. Windows installed in masonry walls must have head and jamb members designed to recess into masonry wall not less than 7/16 inch.

3.2 CLEANING

Clean interior and exterior surfaces of window units of mortar, plaster, paint spattering spots, and other foreign matter to present a neat appearance, to prevent fouling of weathering surfaces and weather-stripping, and to prevent interference with the operation of hardware. Replace all stained, discolored, or abraded windows that cannot be restored to their original condition with new windows.

-- End of Section --

THIS PAGE HAS BEEN INTENTIONALLY LEFT BLANK

SECTION 08 71 00

DOOR HARDWARE
02/16

PART 1 GENERAL

1.1 REFERENCES

The publications listed below form a part of this specification to the extent referenced. The publications are referred to in the text by the basic designation only.

ASTM INTERNATIONAL (ASTM)

ASTM E283	(2004; R 2012) Determining the Rate of Air Leakage Through Exterior Windows, Curtain Walls, and Doors Under Specified Pressure Differences Across the Specimen

BUILDERS HARDWARE MANUFACTURERS ASSOCIATION (BHMA)

ANSI/BHMA A156.1	(2013) Butts and Hinges
ANSI/BHMA A156.13	(2012) Mortise Locks & Latches Series 1000
ANSI/BHMA A156.14	(2013) Sliding and Folding Door Hardware
ANSI/BHMA A156.15	(2015) Release Devices Closer Holder, Electromagnetic and Electromechanical
ANSI/BHMA A156.16	(2013) Auxiliary Hardware
ANSI/BHMA A156.17	(2014) Self Closing Hinges & Pivots
ANSI/BHMA A156.18	(2016) Materials and Finishes
ANSI/BHMA A156.19	(2013) Power Assist & Low Energy Power Operated Doors
ANSI/BHMA A156.2	(2011) Bored and Preassembled Locks and Latches
ANSI/BHMA A156.21	(2014) Thresholds
ANSI/BHMA A156.22	(2012) Door Gasketing and Edge Seal Systems
ANSI/BHMA A156.23	(2010) Electromagnetic Locks
ANSI/BHMA A156.24	(2012) Delayed Egress Locking Systems
ANSI/BHMA A156.27	(2011) Power and Manual Operated Revolving Pedestrian Doors
ANSI/BHMA A156.3	(2014) Exit Devices
ANSI/BHMA A156.30	(2014) High Security Cylinders

ANSI/BHMA A156.36	(2010) Auxiliary Locks
ANSI/BHMA A156.4	(2013) Door Controls - Closers
ANSI/BHMA A156.5	(2014) Cylinder and Input Devices for Locks
ANSI/BHMA A156.6	(2015) Architectural Door Trim
ANSI/BHMA A156.7	(2014) Template Hinge Dimensions
ANSI/BHMA A156.8	(2015) Door Controls - Overhead Stops and Holders

NATIONAL FIRE PROTECTION ASSOCIATION (NFPA)

NFPA 101	(2015; ERTA 2015) Life Safety Code
NFPA 252	(2012) Standard Methods of Fire Tests of Door Assemblies
NFPA 70	(2017) National Electrical Code
NFPA 72	(2013) National Fire Alarm and Signaling Code
NFPA 80	(2016) Standard for Fire Doors and Other Opening Protectives

STEEL DOOR INSTITUTE (SDI/DOOR)

SDI/DOOR A250.8	(2003; R2008) Recommended Specifications for Standard Steel Doors and Frames

U.S. NATIONAL ARCHIVES AND RECORDS ADMINISTRATION (NARA)

36 CFR 1191	Americans with Disabilities Act (ADA) Accessibility Guidelines for Buildings and Facilities; Architectural Barriers Act (ABA) Accessibility Guidelines

UNDERWRITERS LABORATORIES (UL)

UL Bld Mat Dir	(2012) Building Materials Directory

1.2 SUBMITTALS

Government approval is required for submittals with a "G" designation; submittals not having a "G" designation are for Contractor Quality Control approval. Submit the following in accordance with Section 01 33 00 SUBMITTAL PROCEDURES:

SD-02 Shop Drawings

Manufacturer's Detail Drawings; G

Verification of Existing Conditions; G

Hardware Schedule; G

Keying System; G

SD-03 Product Data

Hardware Items; G

SD-08 Manufacturer's Instructions

Installation

SD-10 Operation and Maintenance Data

Hardware Schedule Items, Data Package 1; G

SD-11 Closeout Submittals

Key Bitting

1.3 SHOP DRAWINGS

Submit manufacturer's detail drawings indicating all hardware assembly components and interface with adjacent construction. Indicate power components and wiring coordination for electrified hardware. Base shop drawings on verified field measurements and include verification of existing conditions.

1.4 PRODUCT DATA

Indicate fire-ratings at applicable components. Provide documentation of ABA/ADA accessibility compliance of applicable components, as required by 36 CFR 1191 Appendix D - Technical.

1.5 HARDWARE SCHEDULE

Prepare and submit hardware schedule in the following form:

Hardware Item	Quantity	Size	Reference Publi-cation Type No.	Finish	Mfr Name and Catalog No.	Key Control Symbols	UL Mark (If fire-rated and listed)	BHMA Finish Desig-nation

In addition, submit hardware schedule data package 1 in accordance with Section 01 78 23 OPERATION AND MAINTENANCE DATA.

1.6 KEY BITTING CHART REQUIREMENTS

1.6.1 Requirements

Submit key bitting charts to the Contracting Officer prior to completion of the work. Include:

a. Complete listing of all keys (e.g. AA1 and AA2).

b. Complete listing of all key cuts (AA1-123456, AA2-123458).

c. Tabulation showing which key fits which door.

d. Copy of floor plan showing doors and door numbers.

e. Listing of 20 percent more key cuts than are presently required in each master system.

1.7 QUALITY ASSURANCE

1.7.1 Hardware Manufacturers and Modifications

Provide, as far as feasible, locks, hinges, and closers of one lock, hinge, or closer manufacturer's make. Modify hardware as necessary to provide features indicated or specified.

1.7.2 Key Shop Drawings Coordination Meeting

Prior to the submission of the key shop drawing, the Contracting Officer, Contractor, Door Hardware Subcontractor, using Activity and Base Locksmith must meet to discuss and coordinate key requirements for the facility.

1.8 DELIVERY, STORAGE, AND HANDLING

Deliver hardware in original individual containers, complete with necessary appurtenances including fasteners and instructions. Mark each individual container with item number as shown on hardware schedule. Deliver permanent keys to the Contracting Officer, either directly or by certified mail. Deliver construction master keys with the locks.

PART 2 PRODUCTS

2.1 TEMPLATE HARDWARE

Hardware applied to metal or to prefinished doors must be manufactured using a template. Provide templates to door and frame manufacturers in accordance with ANSI/BHMA A156.7 for template hinges. Coordinate hardware items to prevent interference with other hardware.

2.2 HARDWARE FOR EXIT DOORS

Provide all hardware necessary to meet the requirements of NFPA 72 for door alarms, NFPA 80 for fire doors, NFPA 101 for exit doors, NFPA 252 for fire tests of door assemblies, ABA/ADA accessibility requirements, and all other requirements indicated, even if such hardware is not specifically mentioned in paragraph HARDWARE SCHEDULE. Provide Underwriters Laboratories, Inc. labels for such hardware in accordance with UL Bld Mat Dir or equivalent labels in accordance with another testing laboratory approved in writing by the Contracting Officer.

2.3 HARDWARE ITEMS

Clearly and permanently mark with the manufacturer's name or trademark, hinges, locks, latches, exit devices, bolts and closers where the identifying mark is visible after the item is installed. For closers with covers, the name or trademark may be beneath the cover. Coordinate electrified door hardware components with corresponding components specified in Division 28 ELECTRONIC SECURITY SYSTEMS (ESS).

2.3.1 Hinges

Provide in accordance with ANSI/BHMA A156.1. Provide hinges that are 4-1/2 by 4-1/2 inch unless otherwise indicated. Construct loose pin hinges for interior doors and reverse-bevel exterior doors so that pins are non-removable when door is closed. Other anti-friction bearing hinges may be provided in lieu of ball bearing hinges.

2.3.2 Spring Hinges

Provide in accordance with ANSI/BHMA A156.17.

2.3.3 Locks and Latches

2.3.3.1 Mortise Locks and Latches

Provide in accordance with ANSI/BHMA A156.13, Series 1000, Operational Grade 1, Security Grade 2. Provide mortise locks with escutcheons not less than 7 by 2-1/4 inch with a bushing at least 1/4 inch long. Cut escutcheons to fit cylinders and provide trim items with straight, beveled, or smoothly rounded sides, corners, and edges. Provide lever handles and roses of mortise locks with screwless shanks and no exposed screws.

2.3.3.2 Bored Locks and Latches

Provide in accordance with ANSI/BHMA A156.2, Series 4000, Grade 1.

2.3.3.3 Auxiliary Locks

Provide in accordance with ANSI/BHMA A156.36, Grade 1.

2.3.4 Exit Devices

Provide in accordance with ANSI/BHMA A156.3, Grade 1. Provide adjustable strikes for rim type and vertical rod devices. Provide open back strikes for pairs of doors with mortise and vertical rod devices. Provide touch bars in lieu of conventional crossbars and arms. Provide escutcheons not less than 7 by 2-1/4 inch.

2.3.5 Cylinders and Cores

All cylindrical locaks shall have interchangealbe cores by Best Lock Corp., Arrow Lock Corp., Falcon Lock, or Eagle. Provide cylinders from products of one manufacturer, and provide cores from the products of one manufacturer. Provide cylinders and cores for new locks, including locks provided under other sections of this specification. Provide cylinders and cores with seven pin tumblers. Provide cylinders from the products of one manufacturer, and provide cores from the products of one manufacturer. Rim cylinders, mortise cylinders, and lever handles of bored locksets have interchangeable cores which are removable by special control keys. Stamp each interchangeable core with a key control symbol in a concealed place on the core.

2.3.5.1 High Security Cylinders

Provide in accordance with ANSI/BHMA A156.30, security level A for all high security cylinder components.

2.3.6 Push Button Mechanisms

Provide in accordance with ANSI/BHMA A156.5, Grade 1.

2.3.7 Electrified Hardware

Comply with the requirements of NFPA 70 for wiring of electrified hardware.

2.3.7.1 Key Card System

Provide conduit and conductors as required to service the following card key type system and Cipher Locks: lithium battery powered, magnetic stripe keycard locksets that are ANSI/BHMA A156.13, Series 1000, Grade 1, mortise or ANSI/BHMA A156.2, Series 4000, Grade 1, cylindrical locks, tamper resistant, UL listed with 1 inch throw deadbolt, 3/4-inch throw latch bolt, auxiliary deadlocking latch, and 2-3/4 inch backset. The latch bolt and the dead bolt shall be operated simultaneously by rotating inside lever. Locks with mechanical override lock cylinders are not acceptable. Locks shall be operated only by a correctly encoded keycard. At double doors coordinate the location of the Card Reader so that it is adjacent to the active door. The card reader device will be provided and installed by the Government.

2.3.7.1.1 High Security Lock

Provide the following combination lock: CDX-10 by KABA MAS

2.3.7.2 Release Devices

In accordance with ANSI/BHMA A156.15, Grade 1.

2.3.7.3 Power Assist and Low Energy Power Operated Doors

Provide in accordance with ANSI/BHMA A156.19, Grade 1.

2.3.7.4 Electromagnetic Locks

Provide in accordance with ANSI/BHMA A156.23, Grade 1. Provide electromagnetic locks that do not contain any moving parts and depend solely upon electromagnetism to secure a portal by generating at least 1200 pounds of holding force. The lock must interface with the local processors without external, internal or functional alteration of the local processor. The electromagnetic lock must incorporate an end of line resistor to facilitate line supervision by the system. Provide metal-oxide resistors (MOVs) to protect controllers from reverse current surges, if not incorporated into the electromagnetic lock or local controller.

2.3.7.4.1 Armature

Provide electromagnetic locks with internal circuitry to eliminate residual magnetism and inductive kickback. Provide atuating armature that operates on 12 or 24 Volts dc and cannot dissipate more than 12 Watts. Holding current must be less than 500 milliamperes. Actuating armature must take less than 300 milliseconds to change the status of the lock from fully secure to fully open or fully open to fully secure.

2.3.7.4.2 Tamper Resistance

Provide lock mechanism encased in hardened guard barriers to deter forced entry.

2.3.7.4.3 Mounting Method

Provide electromagnetic lock suitable for use with single and double door with mortise or rim type hardware and compatible with right or left hand mounting.

2.3.7.5 Delayed Egress Locking System

Provide in accordance with ANSI/BHMA A156.24, Grade 1.

2.3.7.6 Power and Manual Operated Revolving Pedestrian Doors

Provide in accordance with ANSI/BHMA A156.27, Grade 1.

2.3.7.6.1 Electric Strikes

Government will provide and install the electric strikes at doors as scheduled; Contractor will provide conduit and conductors as required to service electric strike; 6200 Series by Von Duprin. Contractor shall provide strike plates so that door is operational until electric strikes are installed.

2.3.7.6.2 Electromagneitc Locks

Provide the following electromagnetic locks: 350 Narrow Line Magnetic Door Lock by SDC; surface mounted; 1200 lbs holding force; unit shall have intragal magnetic bond sensor and door status sensor and LED Status indicator.

2.3.8 Keying System

Provide grand master keying system. Provide key cabinet as specified.

Provide sub-master keying system for each building, and keyed to the existing removable core master and grand master keying systems. The Contracting Officer will provide keying information. Key equipment spaces and mechanical rooms separately from the building systems, and key alike to the existing master and grand master systems for these doors.

The Government will provide permanent cylinders with cores and keys for mortise locksets, auxiliary locks, and exit devices. Provide cylinders of Grade 1 products from one manufacturer. Notify the Contracting Officer 90 days prior to the required delivery of the cylinders. Provide temporary cores and keys for the Contractor's use during construction, and for testing of locksets.

2.3.9 Lock Trim

Provide cast, forged, or heavy wrought construction and commercial plain design for lock trim.

2.3.9.1 Knobs and Roses

Provide in accordance with ANSI/BHMA A156.2 and ANSI/BHMA A156.13 for

knobs, roses, and escutcheons. For unreinforced knobs, roses, and escutcheons, provide a 0.050 inch thickness. For reinforced knobs, roses, and escutcheons, provide an outer shell thickness of 0.035 inch and a combined total thickness of 0.070 inch, except at knob shanks. Provide knob shanks 0.060 inch thick.

2.3.9.2 Lever Handles

Provide lever handles. Provide in accordance with ANSI/BHMA A156.3 for mortise locks of lever handles for exit devices. Provide lever handle locks with a breakaway feature (such as a weakened spindle or a shear key) to prevent irreparable damage to the lock when force in excess of that specified in ANSI/BHMA A156.13 is applied to the lever handle. Provide lever handles return to within 1/2 inch of the door face.

2.3.9.3 Texture

Provide knurled or abrasive coated knobs or lever handles for doors which are accessible to blind persons and which lead to dangerous areas.

2.3.10 Keys

Furnish one file key, one duplicate key, and one working key for each key change and for each master and grand master keying system. Furnish one additional working key for each lock of each keyed-alike group. Stamp each key with appropriate key control symbol and "U.S. property - do not duplicate." Do not place room number on keys. Keying to be coordinated with the Government.

2.3.11 Door Bolts

Provide in accordance with ANSI/BHMA A156.16. Provide dustproof strikes for bottom bolts, except at doors having metal thresholds. Provide automatic latching flush bolts in accordance with ANSI/BHMA A156.3, Type 25.

2.3.12 Closers

Provide in accordance with ANSI/BHMA A156.4, Series C02000, Grade 1, with PT 4C. Provide with brackets, arms, mounting devices, fasteners, full size covers, except at storefront mounting, and other features necessary for the particular application. Size closers in accordance with manufacturer's printed recommendations, or provide multi-size closers, Sizes 1 through 6, and list sizes in the Hardware Schedule. Provide manufacturer's 10 year warranty.

2.3.12.1 Identification Marking

Engrave each closer with manufacturer's name or trademark, date of manufacture, and manufacturer's size designation in locations that will be visible after installation.

2.3.13 Overhead Holders

Provide in accordance with ANSI/BHMA A156.8.

2.3.14 Door Protection Plates

Provide in accordance with ANSI/BHMA A156.6.

2.3.14.1 Sizes of Mop and Kick Plates

2 inch less than door width for single doors; 1 inch less than door width for pairs of doors. Provide 8 inch kick and mop plates for flush doors .

2.3.15 Door Stops and Silencers

Provide in accordance with ANSI/BHMA A156.16. Silencers Type L03011. Provide three silencers for each single door, two for each pair.

2.3.16 Thresholds

Provide in accordance with ANSI/BHMA A156.21. Use J35100, with vinyl or silicone rubber insert in face of stop, for exterior doors opening out, unless specified otherwise.

2.3.17 Weatherstripping Gasketing

Provide in accordance with ANSI/BHMA A156.22. Provide the type and function designation where specified in paragraph HARDWARE SCHEDULE. Provide a set to include head and jamb seals, sweep strips, and, for pairs of doors, astragals. Air leakage of weatherstripped doors not to exceed 1.25 cubic feet per minute of air per square foot of door area when tested in accordance with ASTM E283. Provide weatherstripping with one of the following:

2.3.17.1 Extruded Aluminum Retainers

Extruded aluminum retainers not less than 0.050 inch wall thickness with vinyl, neoprene, silicone rubber, or polyurethane inserts. Provide clear (natural) anodized aluminum.

2.3.18 Rain Drips

Provide in accordance with ANSI/BHMA A156.22. Provide extruded aluminum rain drips, not less than 0.08 inch thick, color/finish to match door frame. Set drips in sealant and fasten with stainless steel screws. For all exterior doors that open to the outside, where the door swing area is not covered by on overhang, provide top and bottom rain drips complying with ANSI R3Y535 as a minimum.

2.3.18.1 Door Rain Drips

Approximately 1-1/2 inch high by 5/8 inch projection. Align bottom with bottom edge of door.

2.3.18.2 Overhead Rain Drips

Approximately 1-1/2 inch high by 2-1/2 inch projection. Align bottom with door frame rabbet.

2.3.19 Auxiliary Hardware (Other than locks)

Provide in accordance with ANSI/BHMA A156.16, Grade 1.

2.3.20 Sliding and Folding Door Hardware

Provide in accordance with ANSI/BHMA A156.14, Grade 1. Finishes to match other hardware specified herein.

2.3.21 Special Tools

Provide special tools, such as spanner and socket wrenches and dogging keys, as required to service and adjust hardware items.

2.4 FASTENERS

Provide fasteners of type, quality, size, and quantity appropriate to the specific application. Fastener finish to match hardware. Provide stainless steel or nonferrous metal fasteners in locations exposed to weather. Verify metals in contact with one another are compatible and will avoid galvanic corrosion when exposed to weather.

2.5 FINISHES

Provide in accordance with ANSI/BHMA A156.18. Provide hardware in BHMA 630 finish (satin stainless steel), unless specified otherwise. Provide items not manufactured in stainless steel in BHMA 626 finish (satin chromium plated) over brass or bronze, except aluminum paint finish for surface door closers, and except BHMA 652 finish (satin chromium plated) for steel hinges. Provide hinges for exterior doors in stainless steel with BHMA 630 finish or chromium plated brass or bronze with BHMA 626 finish. Furnish exit devices in BHMA 626 finish in lieu of BHMA 630 finish except where BHMA 630 is specified under paragraph HARDWARE SETS. Match exposed parts of concealed closers to lock and door trim. Match hardware finish for aluminum doors to the doors.

2.6 KEY CABINET AND CONTROL SYSTEM

Provide in accordance with ANSI/BHMA A156.5, Type required to yield a capacity (number of hooks) 25 percent greater than the number of key changes used for door locks. Provide a key cabinet for each building and addition.

2.7 Knox Box

Install a recessed key box (Knox Box) for storage of keys and/or cards for emergency building access by the fire department. Locate at primary exterior entry; exact location as per ROICC. Box is approximately 7 inches by 4 3/4 inches with solid steel door and will be provided by the Base.

PART 3 EXECUTION

3.1 INSTALLATION

Provide hardware in accordance with manufacturers' printed installation instructions. Fasten hardware to wood surfaces with full-threaded wood screws or sheet metal screws. Provide machine screws set in expansion shields for fastening hardware to solid concrete and masonry surfaces. Provide toggle bolts where required for fastening to hollow core construction. Provide through bolts where necessary for satisfactory installation.

3.1.1 Weatherstripping Installation

Provide full contact, weathertight seals that allow operation of doors without binding the weatherstripping.

3.1.1.1 Stop Applied Weatherstripping

Fasten in place with color matched sheet metal screws not more than 9 inch on center after doors and frames have been finish painted.

3.1.1.2 Interlocking Type Weatherstripping

Provide interlocking, self adjusting type on heads and jambs and flexible hook type at sills. Nail weatherstripping to door 1 inch on center and to heads and jambs at 4 inch on center.

3.1.2 Threshold Installation

Extend thresholds the full width of the opening and notch end for jamb stops. Set thresholds in a full bed of sealant and anchor to floor with cadmium-plated, countersunk, steel screws.

3.2 FIRE DOORS AND EXIT DOORS

Provide hardware in accordance with NFPA 72 for door alarms, NFPA 80 for fire doors, NFPA 101 for exit doors, and NFPA 252 for fire tests of door assemblies.

3.3 HARDWARE LOCATIONS

Provide in accordance with SDI/DOOR A250.8, unless indicated or specified otherwise.

a. Kick and Armor Plates: Push side of single-acting doors. Both sides of double-acting doors.

b. Mop Plates: Bottom flush with bottom of door.

3.4 KEY CABINET AND CONTROL SYSTEM

Locate where directed. Tag one set of file keys and one set of duplicate keys. Place other keys in appropriately marked envelopes, or tag each key. Provide complete instructions for setup and use of key control system. On tags and envelopes, indicate door and room numbers or master or grand master key.

3.5 FIELD QUALITY CONTROL

After installation, protect hardware from paint, stains, blemishes, and other damage until acceptance of work. Submit notice of testing 15 days before scheduled, so that testing can be witnessed by the Contracting Officer. Adjust hinges, locks, latches, bolts, holders, closers, and other items to operate properly. Demonstrate that permanent keys operate respective locks, and give keys to the Contracting Officer. Correct, repair, and finish, errors in cutting and fitting and damage to adjoining work.

3.6 HARDWARE SETS

Provide hardware for aluminum doors under this section. Deliver Hardware templates and hardware, except field applied hardware, to the aluminum door and frame manufacturer for use in fabricating doors and frames.

HARDWARE SCHEDULE P1481 - P1482

Hardware supplier shall reference architectural plans to determine door "handness" of each door when specifying hardware.

HW-1
4 hinges (security type)
1 Lever Handle
1 Push Bar Exit
1 Electric Strike Contractor to provide cut-out for device and wiring; Gov't will provide device
1 set Position Switches Contractor to provide cut-out for device and wiring; Gov't will provide device
1 Card Reader Contractor to provide cut-out for device and wiring; Gov't will provide device
1 Closer
1 weather stripping
1 threshold

HW-2
3 Hinges
1 Lever Handle Office Locket

HW-3
3 Hinges
1 Closer
1 Pull Handle
1 Push Plate
1 24" x 24" Louver

HW-4
6 Hinges
1 Storage lock set
1 Pair of Flush Bolts on passive door
1 Astragal (security)

HW-5
3 Hinges
1 Passage Lockset
1 Dead Bolt
1 Set Position Switches Contractor to provide cut-out for device and wiring; Gov't will provide device
1 weather stripping
1 threshold

HW-6
4 Hinges
1 Push Bar Exit
1 set Position Switches Contractor to provide cut-out for device and wiring; Gov't will provide device
1 closer
1 weather stripping
1 threshold

HW-7
6 Hinges
1 Storage Lockset
1 Set Flush Bolts on passive door

HW-8
3 Hinges
1 Storage Lockset

-- End of Section --

THIS PAGE HAS BEEN INTENTIONALLY LEFT BLANK

SECTION 08 81 00

GLAZING
08/11

PART 1 GENERAL

1.1 REFERENCES

The publications listed below form a part of this specification to the extent referenced. The publications are referred to within the text by the basic designation only.

AMERICAN NATIONAL STANDARDS INSTITUTE (ANSI)

ANSI Z97.1	(2015) Safety Glazing Materials Used in Buildings - Safety Performance Specifications and Methods of Test

AMERICAN SOCIETY OF CIVIL ENGINEERS (ASCE)

ASCE/SEI 7	(2010; Errata 2011; Supp 1 2013) Minimum Design Loads for Buildings and Other Structures

ASTM INTERNATIONAL (ASTM)

ASTM C1036	(2010; E 2012) Standard Specification for Flat Glass
ASTM C1048	(2012; E 2012) Standard Specification for Heat-Treated Flat Glass - Kind HS, Kind FT Coated and Uncoated Glass
ASTM C1172	(2014) Standard Specification for Laminated Architectural Flat Glass
ASTM C509	(2006; R 2015) Elastomeric Cellular Preformed Gasket and Sealing Material
ASTM C864	(2005; R 2015) Dense Elastomeric Compression Seal Gaskets, Setting Blocks, and Spacers
ASTM C920	(2014a) Standard Specification for Elastomeric Joint Sealants
ASTM D2287	(2012) Nonrigid Vinyl Chloride Polymer and Copolymer Molding and Extrusion Compounds
ASTM D395	(2016) Standard Test Methods for Rubber Property - Compression Set
ASTM E1300	(2016) Standard Practice for Determining Load Resistance of Glass in Buildings
ASTM E1886	(2013a) Standard Test Method for Performance of Exterior Windows, Curtain

	Walls, Doors, and Impact Protective Systems Impacted by Missile(s) and Exposed to Cyclic Pressure Differentials
ASTM E1996	(2014a) Standard Specification for Performance of Exterior Windows, Curtain Walls, Doors, and Impact Protective Systems Impacted by Windborne Debris in Hurricanes

GLASS ASSOCIATION OF NORTH AMERICA (GANA)

GANA Glazing Manual	(2009) Glazing Manual
GANA Sealant Manual	(2008) Sealant Manual

INSULATING GLASS MANUFACTURERS ALLIANCE (IGMA)

IGMA TB-3001	(2001) Guidelines for Sloped Glazing
IGMA TM-3000	(1990; R 2004) North American Glazing Guidelines for Sealed Insulating Glass Units for Commercial & Residential Use
IGMA TR-1200	(1983; R 2007) Guidelines for Commercial Insulating Glass Dimensional Tolerances

INTERNATIONAL CODE COUNCIL (ICC)

ICC IBC	(2015) International Building Code

U.S. NATIONAL ARCHIVES AND RECORDS ADMINISTRATION (NARA)

16 CFR 1201	Safety Standard for Architectural Glazing Materials

1.2 SUBMITTALS

Government approval is required for submittals with a "G" designation; submittals not having a "G" designation are for Contractor Quality Control approval. Submittals with an "S" are for inclusion in the Sustainability Notebook, in conformance to Section 01 33 29 SUSTAINABILITY REPORTING. Submit the following in accordance with Section 01 33 00 SUBMITTAL PROCEDURES:

SD-02 Shop Drawings

Drawings showing complete details of the proposed setting methods, mullion details, edge blocking, size of openings, frame details, materials, and types and thickness of glass.

SD-03 Product Data

Insulating Glass

Exterior Glazing - performance documentation for all glass types

Glazing Accessories

Manufacturer's descriptive product data, handling and storage recommendations, installation instructions, and cleaning instructions.

SD-04 Samples

Insulating Glass

Glazing Tape

Sealant

Two 8 by 10 inch samples of each of the following: insulating glass units.

SD-07 Certificates

Insulating Glass

Certificates stating that the glass meets the specified requirements. Labels or manufacturers marking affixed to the glass will be accepted in lieu of certificates.

SD-08 Manufacturer's Instructions

Setting and Sealing Materials

Glass Setting

Submit glass manufacturer's recommendations for setting and sealing materials and for installation of each type of glazing material specified.

1.3 PERFORMANCE REQUIREMENTS

1.3.1 Minimum Hurricane Performance Criteria for Glazing and Glazing Assemblies

All exterior glazing, windows, doors with windows, framing assemblies, connections, and supporting structural elements shall meet impact resistance for hurricane wind-borne debris design based on the ICC IBC International Building Code, and ASCE/SEI 7 in accordance with ASTM E1886 and ASTM E1996.

1.4 SYSTEM DESCRIPTION

Fabricate and install watertight and airtight glazing systems to withstand thermal movement and wind loading without glass breakage, gasket failure, deterioration of glazing accessories, or defects in the work. Glazed panels must comply with the safety standards, in accordance with ANSI Z97.1, and comply with indicated wind/snow loading in accordance with ASTM E1300.

1.5 DELIVERY, STORAGE, AND HANDLING

Deliver products to the site in unopened containers, labeled plainly with manufacturers' names and brands. Store glass and setting materials in

safe, enclosed dry locations and do not unpack until needed for installation. Handle and install materials in a manner that will protect them from damage.

1.6 ENVIRONMENTAL REQUIREMENTS

Do not start glazing work until the outdoor temperature is above40 degrees F and rising, unless procedures recommended by the glass manufacturer and approved by the Contracting Officer are made to warm the glass and rabbet surfaces. Provide ventilation to prevent condensation of moisture on glazing work during installation. Do not perform glazing work during damp or rainy weather.

1.7 WARRANTY

1.7.1 Warranty for Insulating Glass Units

Warranty insulating glass units against development of material obstruction to vision (such as dust, fogging, or film formation on the inner glass surfaces) caused by failure of the hermetic seal, other than through glass breakage, for a 10-year period following acceptance of the work. Provide new units for any units failing to comply with terms of this warranty within 45 working days after receipt of notice from the Government.

PART 2 PRODUCTS

2.1 PRODUCT SUSTAINABILITY CRITERIA

2.2 GLASS

ASTM C1036, unless specified otherwise. In doors and sidelights, provide safety glazing material conforming to 16 CFR 1201.

2.2.1 Clear Glass

Type I, Class 1 (clear), Quality q3. Provide for glazing openings not indicated or specified otherwise. Use double-strength sheet glass or 1/8 inch float glass for openings up to and including 15 square feet, 3/16 inch for glazing openings over 15 square feet but not over 30 square feet, and 1/4 inch for glazing openings over 30 square feet but not over 45 square feet.

2.2.2 Annealed Glass

Annealed glass must be Type I transparent flat type, Class 1 - clear, Quality q3, SHGC as required to achieve value as noted in paragraph: INSULATED GLASS UNITS.

2.2.3 Wired Glass

There is no wire glass on this project.

2.2.4 Laminated Glass

ASTM C1172, Kind LA fabricated from two nominal 3/16 inchpieces of Type I, Class 1, Quality q3, flat annealed transparent glass conforming to ASTM C1036. Flat glass must be laminated together with a minimum of0.030 inchthick, clear polyvinyl butyral interlayer with a total nominal

thickness of 3/8 inch. Color must be clear.

2.2.5 Mirrors

2.2.5.1 Glass Mirrors

Glass for mirrors must be Type I transparent flat type, Class 1-clear, Glazing Quality q1 1/4 inch thick conforming to ASTM C1036. Glass must be coated on one surface with silver coating, copper protective coating, and mirror backing paint. Silver coating must be highly adhesive pure silver coating of a thickness which must provide reflectivity of 83 percent or more of incident light when viewed through 1/4 inch thick glass, and must be free of pinholes or other defects. Copper protective coating must be pure bright reflective copper, homogeneous without sludge, pinholes or other defects, and must be of proper thickness to prevent "adhesion pull" by mirror backing paint. Mirror backing paint must consist of two coats of special scratch and abrasion-resistant paint , and must be baked in uniform thickness to provide a protection for silver and copper coatings which will permit normal cutting and edge fabrication.

2.2.6 Tempered Glass

ASTM C1048, Kind FT (fully tempered), Condition A (uncoated), Type I, Class 1 (transparent) Quality q3, 1/4 inch thick, 89 percent light transmittance; shading coefficient as required to achieve value as noted in paragraph: INSULATED GLASS UNITS. Color must be clearand wherever safety glazing material is indicated or specified.

2.2.7 Heat-Strengthened Glass

ASTM C1048, Kind HS (heat strengthened), Condition A (uncoated), Type I, Class 1 (clear), Quality q3, 1/4 inch thick.

2.3 INSULATING GLASS UNITS

Two panes of glass separated by a dehydrated and hermetically sealed. Dimensional tolerances must be as specified in IGMA TR-1200. Spacer must be black, roll-formed, thin-gauge, C-section steel, with bent or tightly welded or keyed and sealed joints to completely seal the spacer periphery and eliminate moisture and hydrocarbon vapor transmission into airspace through the corners. Primary seal must be compressed polyisobutylene and the secondary seal must be a specially formulated silicone.

2.3.1 Buildings

The inner light must be Laminated Glass as described in this section.

The outer light must be Type I, Class 1, 1/4 inch thick, Kind HS (Heat Strengthen) typically except where Kind FT (Fully Tempered) is required or indicated for safety glazing or lateral load resistance; condition A (uncoated), Quality q3 select, Style A (High Light Transmittance). Aesthetic appearance of glass shall be clear in color. Overall thickness of insulated glass units shall not exceed 1.25 inches (nominal) or as otherwise required to fit into standard glazing channel depth or aluminum windows. Insulating glass vision units shall achieve the following performance characteristics (based on glazing manufacturer's measured data assuming a clear inboard lite and standard airspace):

a. Shading Coefficient: 0.43 minimum

b. Visible Light Transmittance: 66 percent minimum
c. Visible Light Outdoor Reflectance: 11 percent minimum
d. Winter Nighttime U-value: 0.28 minimum
e. Summer Daytime U-value: 0.27 minimum

2.4 SETTING AND SEALING MATERIALS

Provide as specified in the GANA Glazing Manual, IGMA TM-3000, IGMA TB-3001, and manufacturer's recommendations, unless specified otherwise herein. Do not use metal sash putty, nonskinning compounds, nonresilient preformed sealers, or impregnated preformed gaskets. Materials exposed to view and unpainted must be gray or neutral color.

2.4.1 Sealants

Provide elastomeric sealants.

2.4.1.1 Elastomeric Sealant

ASTM C920, Type S, Grade NS, Class 12.5, Use G. Use for channel or stop glazing metal sash. Sealant must be chemically compatible with setting blocks, edge blocks, and sealing tapes, with sealants used in manufacture of insulating glass units. Color of sealant must be white.

2.4.2 Joint Backer

Joint backer must have a diameter size at least 25 percent larger than joint width; type and material as recommended in writing by glass and sealant manufacturer.

2.4.3 Preformed Channels

Neoprene, vinyl, or rubber, as recommended by the glass manufacturer for the particular condition.

2.4.4 Sealing Tapes

Preformed, semisolid, PVC-based material of proper size and compressibility for the particular condition, complying with ASTM D2287. Use only where glazing rabbet is designed for tape and tape is recommended by the glass or sealant manufacturer. Provide spacer shims for use with compressible tapes. Tapes must be chemically compatible with the product being set.

2.4.5 Setting Blocks and Edge Blocks

Closed-cell neoprene setting blocks must be dense extruded type conforming to ASTM C509 and ASTM D395, Method B, Shore A durometer between 70 and 90. Edge blocking must be Shore A durometer of 50 (plus or minus 5). Provide silicone setting blocks when blocks are in contact with silicone sealant. Profiles, lengths and locations must be as required and recommended in writing by glass manufacturer. Block color must be black.

2.4.6 Glazing Gaskets

Glazing gaskets must be extruded with continuous integral locking projection designed to engage into metal glass holding members to provide a watertight seal during dynamic loading, building movements and thermal movements. Glazing gaskets for a single glazed opening must be continuous

one-piece units with factory-fabricated injection-molded corners free of flashing and burrs. Glazing gaskets must be in lengths or units recommended by manufacturer to ensure against pull-back at corners. Provide glazing gasket profiles as recommended by the manufacturer for the intended application.

2.4.6.1 Fixed Glazing Gaskets

Fixed glazing gaskets must be closed-cell (sponge) smooth extruded compression gaskets of cured elastomeric virgin neoprene compounds conforming to ASTM C509, Type 2, Option 1.

2.4.6.2 Wedge Glazing Gaskets

Wedge glazing gaskets must be high-quality extrusions of cured elastomeric virgin neoprene compounds, ozone resistant, conforming to ASTM C864, Option 1, Shore A durometer between 65 and 75.

2.4.6.3 Aluminum Framing Glazing Gaskets

Glazing gaskets for aluminum framing must be permanent, elastic, non-shrinking, non-migrating, watertight and weathertight.

2.4.7 Accessories

Provide as required for a complete installation, including glazing points, clips, shims, angles, beads, and spacer strips. Provide noncorroding metal accessories. Provide primer-sealers and cleaners as recommended by the glass and sealant manufacturers.

PART 3 EXECUTION

Any materials that show visual evidence of biological growth due to the presence of moisture must not be installed on the building project.

3.1 PREPARATION

Preparation, unless otherwise specified or approved, must conform to applicable recommendations in the GANA Glazing Manual, GANA Sealant Manual, IGMA TB-3001, IGMA TM-3000, and manufacturer's recommendations. Determine the sizes to provide the required edge clearances by measuring the actual opening to receive the glass. Grind smooth in the shop glass edges that will be exposed in finish work. Leave labels in place until the installation is approved, except remove applied labels on heat-absorbing glass and on insulating glass units as soon as glass is installed. Securely fix movable items or keep in a closed and locked position until glazing compound has thoroughly set.

3.2 GLASS SETTING

Shop glaze or field glaze items to be glazed using glass of the quality and thickness specified or indicated. Glazing, unless otherwise specified or approved, must conform to applicable recommendations in the GANA Glazing Manual, GANA Sealant Manual, IGMA TB-3001, IGMA TM-3000, and manufacturer's recommendations. Aluminum windows, wood doors, and wood windows may be glazed in conformance with one of the glazing methods described in the standards under which they are produced, except that face puttying with no bedding will not be permitted. Handle and install glazing materials in accordance with manufacturer's instructions. Use

beads or stops which are furnished with items to be glazed to secure the glass in place. Verify products are properly installed, connected, and adjusted.

3.2.1 Sheet Glass

Cut and set with the visible lines or waves horizontal.

3.2.2 Insulating Glass Units

Do not grind, nip, or cut edges or corners of units after the units have left the factory. Springing, forcing, or twisting of units during setting will not be permitted. Handle units so as not to strike frames or other objects. Installation must conform to applicable recommendations of IGMA TB-3001 and IGMA TM-3000.

3.2.3 Installation of Heat-Absorbing Glass

Provide glass with clean-cut, factory-fabricated edges. Field cutting will not be permitted.

3.2.4 Installation of Laminated Glass

Sashes which are to receive laminated glass must be weeped to the outside to allow water drainage into the channel.

3.3 CLEANING

Clean glass surfaces and remove labels, paint spots, putty, and other defacement as required to prevent staining. Glass must be clean at the time the work is accepted.

3.4 PROTECTION

Protect glass work immediately after installation. Identify glazed openings with suitable warning tapes, cloth or paper flags, attached with non-staining adhesives. Protect reflective glass with a protective material to eliminate any contamination of the reflective coating. Place protective material far enough away from the coated glass to allow air to circulate to reduce heat buildup and moisture accumulation on the glass. Upon removal, separate protective materials for reuse or recycling. Remove and replace glass units which are broken, chipped, cracked, abraded, or otherwise damaged during construction activities with new units.

-- End of Section --

SECTION 08 91 00

METAL WALL LOUVERS
05/11

PART 1 GENERAL

1.1 REFERENCES

The publications listed below form a part of this specification to the extent referenced. The publications are referred to within the text by the basic designation only.

AIR MOVEMENT AND CONTROL ASSOCIATION INTERNATIONAL, INC. (AMCA)

AMCA 500-D	(2018) Laboratory Methods of Testing Dampers for Rating
AMCA 511	(2010) Certified Ratings Program for Air Control Devices

AMERICAN ARCHITECTURAL MANUFACTURERS ASSOCIATION (AAMA)

AAMA 2605	(2013) Voluntary Specification, Performance Requirements and Test Procedures for Superior Performing Organic Coatings on Aluminum Extrusions and Panels

ASTM INTERNATIONAL (ASTM)

ASTM A1008/A1008M	(2016) Standard Specification for Steel, Sheet, Cold-Rolled, Carbon, Structural, High-Strength Low-Alloy and High-Strength Low-Alloy with Improved Formability, Solution Hardened, and Bake Hardened
ASTM A653/A653M	(2015; E 2016) Standard Specification for Steel Sheet, Zinc-Coated (Galvanized) or Zinc-Iron Alloy-Coated (Galvannealed) by the Hot-Dip Process
ASTM B209	(2014) Standard Specification for Aluminum and Aluminum-Alloy Sheet and Plate
ASTM B221	(2014) Standard Specification for Aluminum and Aluminum-Alloy Extruded Bars, Rods, Wire, Profiles, and Tubes

1.2 SUBMITTALS

Government approval is required for submittals with a "G" designation; submittals not having a "G" designation are for Contractor Quality Control approval. Submit the following in accordance with Section 01 33 00 SUBMITTAL PROCEDURES:

SD-02 Shop Drawings

Wall louvers

SD-03 Product Data

Metal Wall Louvers

SD-04 Samples

1.3 DELIVERY, STORAGE, AND PROTECTION

Deliver materials to the site in an undamaged condition. Carefully store materials off the ground to provide proper ventilation, drainage, and protection against dampness. Louvers shall be free from nicks, scratches, and blemishes. Replace defective or damaged materials with new.

1.4 DETAIL DRAWINGS

Show all information necessary for fabrication and installation of wall louvers. Indicate materials, sizes, thicknesses, fastenings, and profiles.

1.5 COLOR SAMPLES

Colors of finishes for wall louvers shall closely match the color of the aluminum windows, slate gray.

PART 2 PRODUCTS

2.1 MATERIALS

2.1.1 Galvanized Steel Sheet

ASTM A653/A653M, coating designation G90.

2.1.2 Aluminum Sheet

ASTM B209, alloy 3003 or 5005 with temper as required for forming.

2.1.3 Extruded Aluminum

ASTM B221, alloy 6063-T5 or -T52.

2.1.4 Cold Rolled Steel Sheet

ASTM A1008/A1008M, Class 1, with matte finish. Use for interior louvers only.

2.2 METAL WALL LOUVERS

Weather resistant type, with bird screens and made to withstand a wind load of not less than 40 pounds per square foot. Wall louvers shall bear the AMCA certified ratings program seal for air performance and water penetration in accordance with AMCA 500-D and AMCA 511. The rating shall show a water penetration of 0.20 or less ounce per square foot of free area at a free velocity of 800 feet per minute.

2.2.1 Extruded Aluminum Louvers

Fabricated of extruded 6063-T5 or -T52 aluminum with a wall thickness of not less than 0.081 inch.

2.2.2 Formed Metal Louvers

Formed of zinc-coated steel sheet not thinner than 16 U.S. gage, or aluminum sheet not less than 0.08 inch thick.

2.2.3 Mullions and Mullion Covers

Same material and finish as louvers. Provide mullions for all louvers more than 5 feet in width at not more than 5 feet on centers. Provide mullions covers on both faces of joints between louvers.

2.2.4 Screens and Frames

For aluminum louvers, provide 1/2 inch square mesh, 14 or 16 gage aluminum or 1/4 inch square mesh, 16 gage aluminum bird screening. For steel louvers, provide 1/2 inch square mesh, 12 or 16 gage zinc-coated steel; 1/2 inch square mesh, 16 gage copper; or 1/4 inch square mesh, 16 gage zinc-coated steel or copper bird screening. Mount screens in removable, rewirable frames of same material and finish as the louvers.

2.3 FASTENERS AND ACCESSORIES

Provide stainless steel screws and fasteners for aluminum louvers and zinc-coated or stainless steel screws and fasteners for steel louvers. Provide other accessories as required for complete and proper installation.

2.4 FINISHES

2.4.1 Aluminum

Exposed aluminum surfaces shall be factory finished with an organic coating. Color shall be selected from manufacturer's standard colors and closly match the color of the aluminum window frames. Louvers for each building shall have the same finish.

2.4.1.1 Organic Coating

Clean and prime exposed aluminum surfaces. Provide a high-performance finish in accordance with AAMA 2605 with total dry film thickness of not less than 1.2 mil. Color: see Section 08 41 13 Aluminum-Framed Entrances and Storefronts for color discription.

PART 3 EXECUTION

3.1 INSTALLATION

3.1.1 Wall Louvers

Install using stops or moldings, flanges, strap anchors, or jamb fasteners as appropriate for the wall construction and in accordance with manufacturer's recommendations.

3.1.2 Door Louvers

Install louvers in wood doors by using metal "Z" or "L" moldings. Fasten moldings to door with screws.

3.1.3 Screens and Frames

Attach frames to louvers with screws or bolts.

3.2 PROTECTION FROM CONTACT OF DISSIMILAR MATERIALS

3.2.1 Copper or Copper-Bearing Alloys

Paint copper or copper-bearing alloys in contact with dissimilar metal with heavy-bodied bituminous paint or separate with inert membrane.

3.2.2 Aluminum

Where aluminum contacts metal other than zinc, paint the dissimilar metal with a primer and two coats of aluminum paint.

3.2.3 Metal

Paint metal in contact with mortar, concrete, or other masonry materials with alkali-resistant coatings such as heavy-bodied bituminous paint.

3.2.4 Wood

Paint wood or other absorptive materials that may become repeatedly wet and in contact with metal with two coats of aluminum paint or a coat of heavy-bodied bituminous paint.

-- End of Section --

SECTION 09 22 00

SUPPORTS GYPSUM BOARD
02/10

PART 1 GENERAL

1.1 REFERENCES

The publications listed below form a part of this specification to the extent referenced. The publications are referred to within the text by the basic designation only.

AMERICAN INSTITUTE OF STEEL CONSTRUCTION (AISC)

AISC 341	(2016) Seismic Provisions for Structural Steel Buildings

ASTM INTERNATIONAL (ASTM)

ASTM A463/A463M	(2010; R 2015) Standard Specification for Steel Sheet, Aluminum-Coated, by the Hot-Dip Process
ASTM A653/A653M	(2015; E 2016) Standard Specification for Steel Sheet, Zinc-Coated (Galvanized) or Zinc-Iron Alloy-Coated (Galvannealed) by the Hot-Dip Process
ASTM C645	(2014; E 2015) Nonstructural Steel Framing Members
ASTM C754	(2015) Installation of Steel Framing Members to Receive Screw-Attached Gypsum Panel Products
ASTM C841	(2003; R 2013) Installation of Interior Lathing and Furring

NATIONAL ASSOCIATION OF ARCHITECTURAL METAL MANUFACTURERS (NAAMM)

NAAMM EMLA 920	(2009) Guide Specifications for Metal Lathing and Furring

UNDERWRITERS LABORATORIES (UL)

UL Fire Resistance	(2014) Fire Resistance Directory

1.2 SUBMITTALS

Government approval is required for submittals with a "G" designation; submittals not having a "G" designation are for Contractor Quality Control approval. Submit the following in accordance with Section 01 33 00 SUBMITTAL PROCEDURES:

SD-02 Shop Drawings

Metal support systems; G

Submit for the erection of metal framing, furring, and ceiling suspension systems. Indicate materials, sizes, thicknesses, and fastenings.

1.3 DELIVERY, STORAGE, AND HANDLING

Deliver materials to the job site and store in ventilated dry locations. Storage area shall permit easy access for inspection and handling. If materials are stored outdoors, stack materials off the ground, supported on a level platform, and fully protected from the weather. Handle materials carefully to prevent damage. Remove damaged items and provide new items.

PART 2 PRODUCTS

2.1 MATERIALS

Provide steel materials for metal support systems with galvanized coating ASTM A653/A653M, G-60; aluminum coating ASTM A463/A463M, T1-25; or a 55-percent aluminum-zinc coating. Provide support systems and attachments per AISC 341UFC 3-310-04, "Seismic Design for Buildings" in seismic zones.

2.1.1 Materials for Attachment of Gypsum Wallboard

2.1.1.1 Suspended and Furred Ceiling Systems

ASTM C645.

2.1.1.2 Nonload-Bearing Wall Framing and Furring

ASTM C645, but not thinner than 0.0179 inch thickness, with 0.0329 inch minimum thickness supporting wall hung items such as cabinetwork, equipment and fixtures 0.0329 inch thickness. The ASTM certified third party testing statement for equivalent thicknesses shall not apply.

2.1.1.3 Furring Structural Steel Columns

ASTM C645. Steel (furring) clips and support angles listed in UL Fire Resistance may be provided in lieu of steel studs for erection of gypsum wallboard around structural steel columns.

PART 3 EXECUTION

3.1 INSTALLATION

3.1.1 Systems for Attachment of Lath

3.1.1.1 Suspended and Furred Ceiling Systems and Wall Furring

ASTM C841, except as indicated otherwise.

3.1.1.2 Non-loadbearing Wall Framing

NAAMM EMLA 920, except provide framing members 16 inches o.c. unless indicated otherwise.

3.1.2 Systems for Attachment of Gypsum Wallboard

3.1.2.1 Suspended and Furred Ceiling Systems

ASTM C754, except provide framing members 16 inches o.c. unless indicated otherwise.

3.1.2.2 Non-loadbearing Wall Framing and Furring

ASTM C754, except as indicated otherwise.

3.1.2.3 Furring Structural Steel Columns

Install studs or galvanized steel clips and support angles for erection of gypsum wallboard around structural steel columns in accordance with the UL Fire Resistance, design number(s) indicated.

3.2 ERECTION TOLERANCES

Provide framing members which will be covered by finish materials such as wallboard, plaster, or ceramic tile set in a mortar setting bed, within the following limits:

a. Layout of walls and partitions: 1/4 inch from intended position;

b. Plates and runners: 1/4 inch in 8 feet from a straight line;

c. Studs: 1/4 inch in 8 feet out of plumb, not cumulative; and

d. Face of framing members: 1/4 inch in 8 feet from a true plane.

Provide framing members which will be covered by ceramic tile set in dry-set mortar, latex-portland cement mortar, or organic adhesive within the following limits:

a. Layout of walls and partitions: 1/4 inch from intended position;

b. Plates and runners: 1/8 inch in 8 feet from a straight line;

c. Studs: 1/8 inch in 8 feet out of plumb, not cumulative; and

d. Face of framing members: 1/8 inch in 8 feet from a true plane.

-- End of Section --

THIS PAGE HAS BEEN INTENTIONALLY LEFT BLANK

SECTION 09 29 00

GYPSUM BOARD
08/16

PART 1 GENERAL

1.1 REFERENCES

The publications listed below form a part of this specification to the extent referenced. The publications are referred to within the text by the basic designation only.

AMERICAN NATIONAL STANDARDS INSTITUTE (ANSI)

ANSI A108.11	(1992; Reaffirmed 2005) Specifications for Interior Installation of Cementitious Backer Units

ASTM INTERNATIONAL (ASTM)

ASTM C1002	(2014) Standard Specification for Steel Self-Piercing Tapping Screws for the Application of Gypsum Panel Products or Metal Plaster Bases to Wood Studs or Steel Studs
ASTM C1047	(2014a) Standard Specification for Accessories for Gypsum Wallboard and Gypsum Veneer Base
ASTM C1177/C1177M	(2013) Standard Specification for Glass Mat Gypsum Substrate for Use as Sheathing
ASTM C1178/C1178M	(2013) Standard Specification for Glass Mat Water-Resistant Gypsum Backing Panel
ASTM C1396/C1396M	(2014a) Standard Specification for Gypsum Board
ASTM C475/C475M	(2015) Joint Compound and Joint Tape for Finishing Gypsum Board
ASTM C514	(2004; R 2014) Standard Specification for Nails for the Application of Gypsum Board
ASTM C840	(2016) Standard Specification for Application and Finishing of Gypsum Board
ASTM C954	(2015) Steel Drill Screws for the Application of Gypsum Panel Products or Metal Plaster Bases to Steel Studs from 0.033 in. (0.84 mm) to 0.112 in. (2.84 mm) in Thickness
ASTM D1149	(2007; R 2012) Standard Test Method for Rubber Deterioration - Surface Ozone Cracking in a Chamber

ASTM D226/D226M	(2009) Standard Specification for Asphalt-Saturated Organic Felt Used in Roofing and Waterproofing
ASTM D412	(2016) Standard Test Methods for Vulcanized Rubber and Thermoplastic Elastomers - Tension
ASTM D624	(2000; R 2012) Tear Strength of Conventional Vulcanized Rubber and Thermoplastic Elastomers

CALIFORNIA DEPARTMENT OF PUBLIC HEALTH (CDPH)

CDPH SECTION 01350	(2004; Add 2004-01) Standard Practice for the Testing Of Volatile Organic Emissions from Various Sources Using Small-Scale Environmental Chambers

FM GLOBAL (FM)

FM APP GUIDE	(updated on-line) Approval Guide http://www.approvalguide.com/

GREEN SEAL (GS)

GS-36	(2011) Commercial Adhesives

GYPSUM ASSOCIATION (GA)

GA 214	(2010) Recommended Levels of Gypsum Board Finish
GA 216	(2010) Application and Finishing of Gypsum Panel Products
GA 253	(2012) Application of Gypsum Sheathing

SCIENTIFIC CERTIFICATION SYSTEMS (SCS)

SCS	SCS Global Services (SCS)Indoor Advantage

SOUTH COAST AIR QUALITY MANAGEMENT DISTRICT (SCAQMD)

SCAQMD Rule 1168	(1989; R 2005) Adhesive and Sealant Applications

UNDERWRITERS LABORATORIES (UL)

UL 2818	(2013) GREENGUARD Certification Program For Chemical Emissions For Building Materials, Finishes And Furnishings
UL Fire Resistance	(2014) Fire Resistance Directory

1.2 SUBMITTALS

Government approval is required for submittals with a "G" designation;

submittals not having a "G" designation are for Contractor Quality Control approval. Submit the following in accordance with Section 01 33 00 SUBMITTAL PROCEDURES:

SD-03 Product Data

Cementitious Backer Units

Glass Mat Water-Resistant Gypsum Tile Backing Board

Water-Resistant Gypsum Backing Board

Glass Mat Covered or Reinforced Gypsum Sheathing

Glass Mat Covered or Reinforced Gypsum Sheathing Sealant

Accessories

Submit for each type of gypsum board and for cementitious backer units.

Certifications

Gypsum Board

SD-04 Samples

Submit for each color and pattern of predecorated gypsum board. Where colors are not indicated, submit color selection samples of not less than eight of the manufacturer's standard colors.

SD-07 Certificates

Asbestos Free Materials; G

Certify that gypsum board types, gypsum backing board types, cementitious backer units, and joint treating materials do not contain asbestos.

Indoor Air Quality; G

SD-08 Manufacturer's Instructions

Material Safety Data Sheets

SD-10 Operation and Maintenance Data

Manufacturer Maintenance Instructions

SD-11 Closeout Submittals

Recycled Content for Gypsum Board; S

Recycled Content for Paper Facing and Gypsum Cores; S

Indoor Air Quality for Gypsum Board; S

VOC Content of Joint Compound; S

Indoor Air Quality for Non-aerosol Adhesives; S

Indoor Air Quality for Aerosol Adhesives; S

1.3 CERTIFICATIONS

1.3.1 Indoor Air Quality Certifications

Submit required indoor air quality certifications in one submittal package.

1.3.1.1 Ceiling and Wall Systems

Provide products certified to meet indoor air quality requirements by UL 2818 (Greenguard) Gold, SCS Global Services Indoor Advantage Gold or provide validation by other third-party program that products meet the requirements of this paragraph. Provide current product certification documentation from certification body. Gypsum wall board and panels must meet the emissions requirements of CDPH SECTION 01350 (limit requirements for either office or classroom spaces regardless of space type).

1.3.1.2 Adhesives and Sealants

Provide products certified to meet indoor air quality requirements by UL 2818 (Greenguard) Gold, SCS Global Services Indoor Advantage Gold or provide validation by other third-party program that products meet the requirements of this paragraph. Sealants and non-aerosol adhesive products used on the interior of the building (defined as inside of the weatherproofing system) must meet either emissions requirements of CDPH SECTION 01350 (limit requirements for either office or classroom spaces regardless of space type) or VOC content requirements of SCAQMD Rule 1168. Aerosol adhesive products used on the interior of the building (defined as inside of the weatherproofing system) must meet either emissions requirements of CDPH SECTION 01350 (limit requirements for either office or classroom spaces regardless of space type) or VOC content requirements of GS-36. Provide current product certification documentation from certification body.

1.4 DELIVERY, STORAGE, AND HANDLING

1.4.1 Delivery

Deliver materials in the original packages, containers, or bundles with each bearing the brand name, applicable standard designation, and name of manufacturer, or supplier.

1.4.2 Storage

Keep materials dry by storing inside a sheltered building. Where necessary to store gypsum board and cementitious backer units outside, store off the ground, properly supported on a level platform, and protected from direct exposure to rain, snow, sunlight, and other extreme weather conditions. Provide adequate ventilation to prevent condensation. Store per manufacturer's recommendations for allowable temperature and humidity range. Do not store gypsum wallboard with materials which have high emissions of volatile organic compounds (VOCs) or other contaminants. Do not store panels near materials that may offgas

or emit harmful fumes, such as kerosene heaters, fresh paint, or adhesives. Do not use materials that have visible moisture or biological growth.

1.4.3 Handling

Neatly stack gypsum board and cementitious backer units flat to prevent sagging or damage to the edges, ends, and surfaces.

1.5 QUALIFICATIONS

Furnish type of gypsum board work specialized by the installer with a minimum of 3 years of documented successful experience.

1.6 SCHEDULING

The gypsum wallboard must be installed after the installation and ventilation period of the highly-emitting materials.

Commence application only after the area scheduled for gypsum board work is completely weathertight. The heating, ventilating, and air-conditioning systems must be complete and in operation prior to application of the gypsum board. If the mechanical system cannot be activated before gypsum board is begun, the gypsum board work may proceed in accordance with an approved plan to maintain the environmental conditions specified below. Apply gypsum board prior to the installation of finish flooring and acoustic ceiling.

1.7 ENVIRONMENTAL REQUIREMENTS

Do not expose the gypsum board to excessive sunlight prior to gypsum board application. Maintain a continuous uniform temperature of not less than 50 degrees F and not more than 80 degrees F for at least one week prior to the application of gypsum board work, while the gypsum board application is being done, and for at least one week after the gypsum board is set. Shield air supply and distribution devices to prevent any uneven flow of air across the plastered surfaces. Provide ventilation to exhaust moist air to the outside during gypsum board application, set, and until gypsum board jointing is dry. In glazed areas, keep windows open top and bottom or side to side 3 to 4 inches. Reduce openings in cold weather to prevent freezing of joint compound when applied. For enclosed areas lacking natural ventilation, provide temporary mechanical means for ventilation. In unglazed areas subjected to hot, dry winds or temperature differentials from day to night of 20 degrees F or more, screen openings with cheesecloth or similar materials. Avoid rapid drying. During periods of low indoor humidity, provide minimum air circulation following gypsum boarding and until gypsum board jointing complete and is dry.

1.8 FIRE RESISTIVE CONSTRUCTION

Comply with specified fire-rated assemblies for design numbers indicated per UL Fire Resistance or FM APP GUIDE.

PART 2 PRODUCTS

2.1 PRODUCT SUSTAINABILITY CRITERIA

For products in this section, where applicable and to extent allowed by performance criteria, provide and document the following:

2.1.1 Recycled Content for Gypsum Board Materials

Recycled content is identified for some products in this section; provide documentation in accordance with Section 01 33 29 SUSTAINABILITY REPORTING paragraph RECYCLED CONTENT. Other products listed in this section may be available with recycled content; identify those products that meet project requirements for recycled content, and provide documentation in accordance with Section 01 33 29 SUSTAINABILITY REPORTING paragraph RECYCLED CONTENT.

2.1.2 Reduce Volatile Organic Compounds (VOC) (LOW-EMITTING MATERIALS) for Products

Reduced VOC content is identified for some products in this section; provide documentation in accordance with Section 01 33 29 SUSTAINABILITY REPORTING paragraph REDUCE VOLATILE ORGANIC COMPOUNDS (VOC) (LOW-EMITTING MATERIALS). Other products listed in this section may be available with reduced VOC content; identify those products that meet project requirements for reduced VOC content, and provide documentation in accordance with Section 01 33 29 SUSTAINABILITY REPORTING paragraph REDUCE VOLATILE ORGANIC COMPOUNDS (VOC) (LOW-EMITTING MATERIALS).

2.2 MATERIALS

Conform to specifications, standards and requirements specified. Provide gypsum board types, gypsum backing board types, cementitious backing units, and joint treating materials manufactured from asbestos free materials only. Submit Material Safety Data Sheets and manufacturer maintenance instructions for gypsum materials including adhesives.

2.2.1 Gypsum Board

ASTM C1396/C1396M. Gypsum board must contain a minimum of 5 percent post-consumer recycled content, or a minimum of 20 percent post-industrial recycled content. Provide data identifying percentage of recycled content for gypsum board. Paper facings must contain a minimum of 90 percent post-consumer recycled paper content. Gypsum cores must contain a minimum of 90 percent post-industrial recycled gypsum content. Provide data identifying percentage of recycled content for paper facing and gypsum cores. Provide certification of indoor air quality for gypsum board.

2.2.1.1 Regular

48 inch wide, 5/8 inch thick, tapered edges. .

2.2.1.2 Type X (Special Fire-Resistant)

48 inch wide, 5/8 inch thick, tapered.

2.2.2 Gypsum Backing Board

ASTM C1396/C1396M, gypsum backing board must be used as a base in a multilayer system.

2.2.2.1 Regular

48 inch wide, 5/8 inch thick, square edges.

2.2.2.2 Type X (Special Fire-Resistant)

48 inch wide, 5/8 inch thick, square edges.

2.2.3 Regular Water-Resistant Gypsum Backing Board

ASTM C1396/C1396M

2.2.3.1 Regular

48 inch wide, 5/8 inch thick, tapered edges.

2.2.3.2 Type X (Special Fire-Resistant)

48 inch wide, 5/8 inch thick, tapered edges.

2.2.4 Glass Mat Water-Resistant Gypsum Tile Backing Board

ASTM C1178/C1178M

2.2.4.1 Regular

48 inch wide, 5/8 inch thick, square edges.

2.2.4.2 Type X (Special Fire-Resistant)

48 inch wide, 5/8 inch thick, square edges.

2.2.5 Glass Mat Covered or Reinforced Gypsum Sheathing

Exceeds physical properties of ASTM C1396/C1396M and ASTM C1177/C1177M. Provide 5/8 inch, gypsum sheathing. Provide gypsum board of with a noncombustible water-resistant core, with glass mat surfaces embedded to the gypsum core or reinforcing embedded throughout the gypsum core. Warrant gypsum sheathing board for at least twelve months against delamination due to direct weather exposure. Provide continuous, asphalt impregnated, building felt to cover exterior face of sheathing. Seal all joints, seams, and penetrations with compatible sealant.

2.2.5.1 Glass Mat Covered or Reinforced Gypsum Sheathing Sealant

Provide sealant compatible with glass mat covered or reinforced gypsum sheathing, rubber washers for masonry veneer anchors, and other associated cavity wall components such as anchors and through wall flashing. Provide sealants for glass mat covered or reinforced gypsum sheathing board edge seams and veneer anchor penetrations recommended by the glass mat covered or reinforced gypsum sheathing manufacturer and have the following performance requirements:

a. ASTM D412: Tensile Strength, 80 psi
b. ASTM D412: Ultimate Tensile Strength (maximum elongation), 170 psi
c. ASTM D624: Tear Strength, dieB, 27 ppi
d. ASTM D1149: Joint Movement Capability after 14 Days cure, plus or minus 50 percent.

2.2.6 Cementitious Backer Units

In accordance with the Tile Council of America (TCA) Handbook.

2.2.7 Joint Treatment Materials

ASTM C475/C475M. Product must be low emitting VOC types with VOC limits not exceeding 50 g/L. Provide data identifying VOC content of joint compound. Use all purpose joint and texturing compound containing inert fillers and natural binders, including lime compound. Pre-mixed compounds must be free of antifreeze, vinyl adhesives, preservatives, biocides and other slow releasing compounds.

2.2.7.1 Embedding Compound

Specifically formulated and manufactured for use in embedding tape at gypsum board joints and compatible with tape, substrate and fasteners.

2.2.7.2 Finishing or Topping Compound

Specifically formulated and manufactured for use as a finishing compound.

2.2.7.3 All-Purpose Compound

Specifically formulated and manufactured to serve as both a taping and a finishing compound and compatible with tape, substrate and fasteners.

2.2.7.4 Setting or Hardening Type Compound

Specifically formulated and manufactured for use with fiber glass mesh tape.

2.2.7.5 Joint Tape

Use cross-laminated, tapered edge, reinforced paper, or fiber glass mesh tape recommended by the manufacturer.

2.2.8 Fasteners

2.2.8.1 Nails

ASTM C514.

2.2.8.2 Screws

ASTM C1002, Type "G", Type "S" or Type "W" steel drill screws for fastening gypsum board to gypsum board, wood framing members and steel framing members less than 0.033 inch thick. ASTM C954 steel drill screws for fastening gypsum board to steel framing members 0.033 to 0.112 inch thick. Provide cementitious backer unit screws with a polymer coating.

2.2.9 Adhesives

Provide certification of indoor air quality for non-aerosol adhesives applied on the interior of the building (inside of the weatherproofing system). Provide certification of indoor air quality for aerosol adhesives used on the interior of the building (inside of the weatherproofing system).

2.2.9.1 Adhesive for Fastening Gypsum Board to Metal Framing

Not permitted.

2.2.10 Accessories

ASTM C1047. Fabricate from corrosion protected steel or plastic designed for intended use. Accessories manufactured with paper flanges are not acceptable. Flanges must be free of dirt, grease, and other materials that may adversely affect bond of joint treatment.

2.2.11 Asphalt Impregnated Building Felt

Provide a 15 lb asphalt moisture barrier over glass mat covered or reinforced gypsum sheathing. Conforming to ASTM D226/D226M Type 1 (No. 15) for asphalt impregnated building felt.

2.2.12 Water

Provide clean, fresh, and potable water.

PART 3 EXECUTION

3.1 EXAMINATION

3.1.1 Framing and Furring

Verify that framing and furring are securely attached and of sizes and spacing to provide a suitable substrate to receive gypsum board and cementitious backer units. Verify that all blocking, headers and supports are in place to support plumbing fixtures and to receive soap dishes, grab bars, towel racks, and similar items. Do not proceed with work until framing and furring are acceptable for application of gypsum board and cementitious backer units.

3.1.2 Building Construction Materials

Do not install building construction materials that show visual evidence of biological growth.

3.2 APPLICATION OF GYPSUM BOARD

Apply gypsum board to framing and furring members in accordance with ASTM C840 or GA 216 and the requirements specified. Apply gypsum board with separate panels in moderate contact; do not force in place. Stagger end joints of adjoining panels. Neatly fit abutting end and edge joints. Use gypsum board of maximum practical length; select panel sizes to minimize waste. Cut out gypsum board to make neat, close, and tight joints around openings. In vertical application of gypsum board, provide panels in lengths required to reach full height of vertical surfaces in one continuous piece. Lay out panels to minimize waste; reuse cutoffs whenever feasible. Treat edges of cutouts for plumbing pipes, screwheads, and joints with water-resistant compound as recommended by the gypsum board manufacturer. Minimize framing by floating corners with single studs and drywall clips. Provide type of gypsum board for use in each system specified herein as indicated.

3.2.1 Exterior Application

Apply exterior gypsum board (such as at soffits) in accordance with ASTM C840, System XI or GA 216.

3.2.2 Glass Mat Covered or Fiber Reinforced Gypsum Sheathing

Apply glass mat covered or fiber reinforced gypsum sheathing in accordance to gypsum association publications GA 253. Follow gypsum sheathing manufacturer's requirements of design details for joints and fasteners and be properly installed to protect the substrate from moisture intrusion. Do not leave exposed surfaces of the glass mat covered or fiber reinforced gypsum sheathing beyond the manufacturer's recommendation without a weather barrier cladding. Seal all joints, seams, and penetrations with a compatible silicone sealant.

3.2.3 Control Joints

Install expansion and contraction joints in ceilings and walls in accordance with ASTM C840, System XIII or GA 216. Fill control joints between studs in fire-rated construction with firesafing insulation to match the fire-rating of construction.

3.3 APPLICATION OF CEMENTITIOUS BACKER UNITS

3.3.1 Application

In wet areas to receive tile finishes apply cementitious backer units in accordance with ANSI A108.11. Place a 15 lb asphalt impregnated, continuous felt paper membrane behind cementitious backer units, between backer units and studs. Place membrane with a minimum 6 inch overlap of sheets laid shingle style.

3.3.2 Joint Treatment

ANSI A108.11.

3.4 FINISHING OF GYPSUM BOARD

Tape and finish gypsum board in accordance with ASTM C840, GA 214 and GA 216. Finish plenum areas above ceilings to Level 1 in accordance with GA 214. Finish water resistant gypsum backing board, ASTM C1396/C1396M, to receive ceramic tile to Level 2 in accordance with GA 214. Finish walls and ceilings to receive a heavy-grade wall covering or heave textured finish before painting to Level 3 in accordance with GA 214. Finish walls and ceilings without critical lighting to receive flat paints, light textures, or wall coverings to Level 4 in accordance with GA 214. Unless otherwise specified, finish all gypsum board walls, partitions and ceilings to Level 5 in accordance with GA 214. Provide joint, fastener depression, and corner treatment. Tool joints as smoothly as possible to minimize sanding and dust. Do not use self-adhering fiber glass mesh tape with conventional drying type joint compounds; use setting or hardening type compounds only. Provide treatment for water-resistant gypsum board as recommended by the gypsum board manufacturer. Protect workers, building occupants, and HVAC systems from gypsum dust.

3.4.1 Uniform Surface

Wherever gypsum board is to receive eggshell, semigloss or gloss paint finish, or where severe, up or down lighting conditions occur, finish gypsum wall surface in accordance to GA 214 Level 5. In accordance with GA 214 Level 5, apply a thin skim coat of joint compound to the entire gypsum board surface, after the two-coat joint and fastener treatment is complete and dry.

3.5 SEALING

Seal openings around pipes, fixtures, and other items projecting through gypsum board and cementitious backer units as specified in Section 07 92 00 JOINT SEALANTS. Apply material with exposed surface flush with gypsum board or cementitious backer units.

3.5.1 Sealing for Glass Mat or Reinforced Gypsum Board Sheathing

Apply silicone sealant in a 3/8 inch bead to all joints and trowel flat. Apply enough of the same sealant to all fasteners penetrating through the glass mat gypsum board surface to completely cover the penetration when troweled flat. Do not place construction and materials behind sheathing until a visual inspection of sealed joints during daylight hours has been completed by Contracting Officer.

3.6 FIRE-RESISTANT ASSEMBLIES

Wherever fire-rated construction is indicated, provide materials and application methods, including types and spacing of fasteners, wall and ceiling framing in accordance with the specifications contained in UL Fire Resistance for the Design Number(s) indicated. Joints of fire-rated gypsum board enclosures must be closed and sealed in accordance with UL test requirements or GA requirements. Seal penetrations through rated partitions and ceilings tight in accordance with tested systems.

3.7 PATCHING

Patch surface defects in gypsum board to a smooth, uniform appearance, ready to receive finishes.

3.8 SHAFTWALL FRAMING

Install the shaftwall system in accordance with the system manufacturer's published instructions. Coordinate bucks, anchors, blocking and other items placed in or behind shaftwall framing with electrical and mechanical work. Patch or replace fireproofing materials which are damaged or removed during shaftwall construction.

-- End of Section --

SECTION 09 65 00

RESILIENT FLOORING
08/10

PART 1 GENERAL

1.1 REFERENCES

The publications listed below form a part of this specification to the extent referenced. The publications are referred to within the text by the basic designation only.

ASTM INTERNATIONAL (ASTM)

ASTM D4078	(2002; R 2015) Water Emulsion Floor Polish
ASTM E648	(2014c) Standard Test Method for Critical Radiant Flux of Floor-Covering Systems Using a Radiant Heat Energy Source
ASTM F1482	(2015) Installation and Preparation of Panel Type Underlayments to Receive Resilient Flooring
ASTM F1700	(2013a) Solid Vinyl Floor Tile
ASTM F1861	(2008; E 2012; R 2012) Resilient Wall Base
ASTM F1869	(2016) Measuring Moisture Vapor Emission Rate of Concrete Subfloor Using Anhydrous Calcium Chloride
ASTM F2170	(2011) Determining Relative Humidity in Concrete Floor Slabs in situ Probes
ASTM F710	(2011) Standard Practice for Preparing Concrete Floors to Receive Resilient Flooring

GREEN SEAL (GS)

GS-36	(2011) Commercial Adhesives

NATIONAL FIRE PROTECTION ASSOCIATION (NFPA)

NFPA 253	(2011) Standard Method of Test for Critical Radiant Flux of Floor Covering Systems Using a Radiant Heat Energy Source

1.2 SYSTEM DESCRIPTION

1.2.1 Fire Resistance Requirements

Provide a critical radiant flux of not less than 0.45 watts per square centimeter (Class 1) for flooring in corridors and exits when tested in accordance with ASTM E648 or NFPA 253.

1.3 SUBMITTALS

Government approval is required for submittals with a "G" designation; submittals not having a "G" designation are for Contractor Quality Control approval. Submittals with an "S" are for inclusion in the Sustainability Notebook, in conformance to Section 01 33 29 SUSTAINABILITY REPORTING. Submit the following in accordance with Section 01 33 00 SUBMITTAL PROCEDURES:

SD-02 Shop Drawings

Resilient Flooring and Accessories; G

SD-03 Product Data

Resilient Flooring and Accessories; G
Adhesives;

Solid Vinyl Tile

Wall Base

SD-04 Samples

Resilient Flooring and Accessories; G, ID

SD-06 Test Reports

Moisture, Alkalinity and Bond Tests; G

SD-08 Manufacturer's Instructions

Surface Preparation; G,ID
Installation; G

SD-10 Operation and Maintenance Data

Resilient Flooring and Accessories; G

1.4 DELIVERY, STORAGE, AND HANDLING

Deliver materials to the building site in original unopened containers bearing the manufacturer's name, style name, pattern color name and number, production run, project identification, and handling instructions. Store materials in a clean, dry, secure, and well-ventilated area with ambient air temperature maintained above 68 degrees F and below 85 degrees F, stacked according to manufacturer's recommendations. Protect materials from the direct flow of heat from hot-air registers, radiators and other heating fixtures and appliances. Observe ventilation and safety procedures specified in the MSDS. Do not store rubber surface products with materials that have a high capacity to adsorb volatile organic compound (VOC) emissions. Do not store exposed rubber surface materials in occupied spaces.

1.5 ENVIRONMENTAL REQUIREMENTS

Maintain areas to receive resilient flooring at a temperature above 68 degrees F and below 85 degrees F for 3 days before application, during application and 2 days after application, unless otherwise directed by the flooring manufacturer for the flooring being installed. Maintain a minimum temperature of 55 degrees F thereafter. Provide adequate ventilation to remove moisture from area and to comply with regulations limiting concentrations of hazardous vapors.

1.6 SCHEDULING

Schedule resilient flooring application after the completion of other work which would damage the finished surface of the flooring.

1.7 WARRANTY

Provide manufacturer's standard performance guarantees or warranties that extend beyond a Twenty year period.

1.8 EXTRA MATERIALS

Provide extra flooring material of each color and pattern at the rate of 5 tiles for each 1000 tilesinstalled. Provide extra wall base material composed of 20 linear feet of each type, color and pattern. Package all extra materials in original properly marked containers bearing the manufacturer's name, brand name, pattern color name and number, production run, and handling instructions. Provide extra materials from the same lot as those installed. Leave extra stock at the site in location assigned by Contracting Officer.

PART 2 PRODUCTS

2.1 SOLID VINYL TILE

Conform to ASTM F1700 Class III printed film minimum wear layer thickness 0.040 mil and minimum overall thickness 0.098 inch, Type A (smooth). Provide 18 inch square tile.

2.2 WALL BASE

Conform to ASTM F1861, Type TP (thermoplastic rubber), Style A (straight - installed with carpet) ,andStyle B (coved - installed with resilient flooring). Provide 4 inch high and a minimum 1/8 inch thick wall base. Provide job formed corners in matching height, shape, and color.

2.3 MOULDING

Provide tapered mouldings of clear anodized aluminum and types as recommended by flooring manufacturer for both edges and transitions of flooring materials specified. Provide vertical lip on moulding of maximum 1/4 inch. Provide bevel change in level between 1/4 and 1/2 inch with a slope no greater than 1:2.

2.4 ADHESIVES

Provide adhesives for flooring, base and accessories as recommended by the manufacturer and comply with local indoor air quality standards. the current VOC content limits of GS-36. Submit manufacturer's descriptive data, documentation stating physical characteristics, and mildew and germicidal characteristics.

2.5 SURFACE PREPARATION MATERIALS

Provide surface preparation materials, such as panel type underlayment, lining felt, and floor crack fillers as recommended by the flooring manufacturer for the subfloor conditions. Comply with ASTM F1482 for panel type underlayment products. Use one of the following substrates:

a. Concrete.

2.6 POLISH/FINISH

Provide polish finish as recommended by the manufacturer and conform to ASTM D4078 for polish.

2.7 CAULKING AND SEALANTS

Provide caulking and sealants in accordance with Section 07 92 00 JOINT SEALANTS.

2.8 MANUFACTURER'S COLOR, PATTERN AND TEXTURE

Provide color, pattern and texture for resilient flooring and accessories as indicated on the drawings. Color listed is not intended to limit the selection of equal colors from other manufacturers. Provide flooring in any one continuous area or replacement of damaged flooring in continuous area from same production run with same shade and pattern. Submit scaled drawings indicating patterns (including location of patterns and colors) and dimensions. Submit manufacturer's descriptive data and threesamples of each indicated color and type of flooring, base, mouldings, and accessories sized a minimum 2-1/2 by 4 inch. Submit Data Package 1 in accordance with Section 01 78 23 OPERATION AND MAINTENANCE DATA.

PART 3 EXECUTION

3.1 EXAMINATION

Examine and verify that site conditions are in agreement with the design package. Report all conditions that will prevent a proper installation. Do not take any corrective action without written permission from the Government. Work will proceed only when conditions have been corrected and accepted by the installer. Submit manufacturer's printed installation instructions for all flooring materials and accessories, including preparation of substrate, seaming techniques, and recommended adhesives.

3.2 SURFACE PREPARATION

Provide a smooth, true, level plane for surface preparation of the flooring, except where indicated as sloped. Floor to be flat to within 3/16 inch in 10 feet. Prepare subfloor in accordance with flooring manufacturer's recommended instructions. Prepare the surfaces of lightweight concrete slabs (as defined by the flooring manufacturer) as recommended by the flooring manufacturer. Comply with ASTM F710 for concrete subfloor preparation. Floor fills or toppings may be required as recommended by the flooring manufacturer. Install underlayments, when required by the flooring manufacturer, in accordance with manufacturer's recommended printed installation instructions. Comply with ASTM F1482 for panel type underlayments. Before any work under this section is begun, correct all defects such as rough or scaling concrete, chalk and dust,

cracks, low spots, high spots, and uneven surfaces. Repair all damaged portions of concrete slabs as recommended by the flooring manufacturer. Remove concrete curing and sealer compounds from the slabs, other than the type that does not adversely affect adhesion. Remove paint, varnish, oils, release agents, sealers, waxes, and adhesives, as required by the flooring product in accordance with manufacturer's printed installation instructions.

3.3 MOISTURE, ALKALINITY AND BOND TESTS

Determine the suitability of the concrete subfloor for receiving the resilient flooring with regard to moisture content and pH level by moisture and alkalinity tests. Conduct moisture testing in accordance with ASTM F1869 or ASTM F2170, unless otherwise recommended by the flooring manufacturer. Conduct alkalinity testing as recommended by the flooring manufacturer. Determine the compatibility of the resilient flooring adhesives to the concrete floors by a bond test in accordance with the flooring manufacturer's recommendations. Submit copy of test reports for moisture and alkalinity content of concrete slab, and bond test stating date of test, person conducting the test, and the area tested.

3.4 PLACING VINYL COMPOSITION, LINOLEUM AND SOLID VINYL TILES

Install tile flooring and accessories in accordance with manufacturer's printed installation instructions. Prepare and apply adhesives in accordance with manufacturer's directions. Keep tile lines and joints square, symmetrical, tight, and even. Keep each floor in true, level plane, except where slope is indicated. Vary edge width as necessary to maintain full-size tiles in the field, no edge tile to be less than one-half the field tile size, except where irregular shaped rooms make it impossible. Cut flooring to fit around all permanent fixtures, built-in furniture and cabinets, pipes, and outlets. Cut, fit, and scribe edge tile to walls and partitions after field flooring has been applied.

3.5 PLACING MOULDING

Provide moulding where flooring termination is higher than the adjacent finished flooring and at transitions between different flooring materials. When required, locate moulding under door centerline. Moulding is not required at doorways where thresholds are provided. Anchor aluminum moulding to floor surfaces as recommended by the manufacturer.

3.6 PLACING WALL BASE

Install wall base in accordance with manufacturer's printed installation instructions. Prepare and apply adhesives in accordance with manufacturer's printed directions. Tighten base joints and make even with adjacent resilient flooring. Fill voids along the top edge of base at masonry walls with caulk. Roll entire vertical surface of base with hand roller, and press toe of base with a straight piece of wood to ensure proper alignment. Avoid excess adhesive in corners.

3.7 CLEANING

Immediately upon completion of installation of flooring in a room or an area, dry/clean the flooring and adjacent surfaces to remove all surplus adhesive. Clean flooring as recommended in accordance with manufacturer's printed maintenance instructions and within the recommended time frame.

As required by the manufacturer, apply the recommended number of coats and type of polish and/or finish in accordance with manufacturer's written instructions.

3.8 PROTECTION

From the time of installation until acceptance, protect flooring from damage as recommended by the flooring manufacturer. Remove and replace flooring which becomes damaged, loose, broken, or curled and wall base which is not tight to wall or securely adhered.

-- End of Section --

THIS PAGE HAS BEEN INTENTIONALLY LEFT BLANK

SECTION 09 68 00

CARPETING
08/16

PART 1 GENERAL

1.1 REFERENCES

The publications listed below form a part of this specification to the extent referenced. The publications are referred to within the text by the basic designation only.

AMERICAN ASSOCIATION OF TEXTILE CHEMISTS AND COLORISTS (AATCC)

AATCC 107	(2013) Colorfastness to Water
AATCC 134	(2011; E 2013) Electrostatic Propensity of Carpets
AATCC 16	(2004; E 2008; E 2010) Colorfastness to Light
AATCC 165	(2013) Colorfastness to Crocking: Textile Floor Coverings - Crockmeter Method
AATCC 174	(2011) Antimicrobial Activity Assessment of Carpets

ASTM INTERNATIONAL (ASTM)

ASTM D1335	(2012) Standard Test Method for Tuft Bind of Pile Yarn Floor Coverings
ASTM D1667	(2005; R 2011) Flexible Cellular Materials - Poly (Vinyl Chloride) Foam (Closed-Cell)
ASTM D297	(2015) Rubber Products - Chemical Analysis
ASTM D3278	(1996; R 2011) Flash Point of Liquids by Small Scale Closed-Cup Apparatus
ASTM D5793	(2013) Binding Sites Per Unit Length or Width of Pile Yarn Floor Coverings
ASTM D5848	(2010; E 2010) Mass Per Unit Area of Pile Yarn Floor Coverings
ASTM D6859	(2011) Standard Test Method for Pile Thickness of Finished Level Pile Yarn Floor Coverings
ASTM E648	(2014c) Standard Test Method for Critical Radiant Flux of Floor-Covering Systems Using a Radiant Heat Energy Source

CALIFORNIA DEPARTMENT OF PUBLIC HEALTH (CDPH)

CDPH SECTION 01350	(2004; Add 2004-01) Standard Practice for the Testing Of Volatile Organic Emissions from Various Sources Using Small-Scale Environmental Chambers

CARPET AND RUG INSTITUTE (CRI)

CRI CIS	(2011) Carpet Installation Standard
CRI GLP QM	(2015) Green Label Plus Quality Manual

GREEN SEAL (GS)

GS-36	(2011) Commercial Adhesives

INTERNATIONAL ORGANIZATION FOR STANDARDIZATION (ISO)

ISO 2551	(1981) Machine-made Textile Floor Coverings - Determination of Dimensional Changes Due to the Effects of Varied Water and Heat Conditions

SCIENTIFIC CERTIFICATION SYSTEMS (SCS)

SCS	SCS Global Services (SCS)Indoor Advantage

SOUTH COAST AIR QUALITY MANAGEMENT DISTRICT (SCAQMD)

SCAQMD Rule 1113	(2004) Architectural Coatings
SCAQMD Rule 1168	(1989; R 2005) Adhesive and Sealant Applications

U.S. NATIONAL ARCHIVES AND RECORDS ADMINISTRATION (NARA)

16 CFR 1630	Standard for the Surface Flammability of Carpets and Rugs (FF 1-70)

UNDERWRITERS LABORATORIES (UL)

UL 2818	(2013) GREENGUARD Certification Program For Chemical Emissions For Building Materials, Finishes And Furnishings

1.2 SUBMITTALS

Government approval is required for submittals with a "G" designation; submittals not having a "G" designation are for information only. When used, a designation following the "G" designation identifies the office that will review the submittal for the Government. Submittals with an "S" are for inclusion in the Sustainability Notebook, in conformance to Section 01 33 29 SUSTAINABILITY REPORTING. Submit the following in accordance with Section 01 33 00 SUBMITTAL PROCEDURES:

SD-02 Shop Drawings

Installation Drawings; G

Moldings; G

SD-03 Product Data

Carpet; G

Carpet Cushion; G

Moldings; G

Physical Characteristics

SD-04 Samples

Carpet; G

Moldings; G

Carpet Cushion; G

SD-06 Test Reports

Moisture and Alkalinity Tests; G

SD-07 Certificates

Indoor Air Quality

SD-08 Manufacturer's Instructions

Surface Preparation

Installation

SD-10 Operation and Maintenance Data

Carpet; G

Cleaning and Protection; G

Maintenance Service

SD-11 Closeout Submittals

Recycled Content for Carpeting; S

Recycled Content for Fiber Cushion; S

Indoor Air Quality for Carpet; S

Indoor Air Quality for Fiber Cushion; S

Indoor Air Quality for Aerosol Adhesives; S

Indoor Air Quality for Non-Aerosol Adhesives; S

Indoor Air Quality for Concrete Primer; S

Warranty

1.3 CERTIFICATIONS

1.3.1 Indoor Air Quality Certifications

1.3.1.1 Floor Covering Materials

Provide carpet and cushion products certified to meet indoor air quality requirements by UL 2818 (GreenGuard) Gold, SCS Global Services Indoor Advantage Gold, CRI GLP QM or provide validation by other third-party program that products meet the requirements of this paragraph. Products must meet emissions requirements of CDPH SECTION 01350. Provide current product certification documentation from certification body.

1.3.1.2 Paints and Coatings

Concrete primer products used on the interior of the building (defined as inside of the weatherproofing system) must meet either emissions requirements of CDPH SECTION 01350 (limit requirements for either office or classroom spaces regardless of space type) or VOC content requirements of SCAQMD Rule 1113. Provide current product certification documentation from certification body.

1.3.1.3 Adhesives and Sealants

Sealants and non-aerosol adhesive products used on the interior of the building (defined as inside of the weatherproofing system) must meet either emissions requirements of CDPH SECTION 01350 (limit requirements for either office or classroom spaces regardless of space type) or VOC content requirements of SCAQMD Rule 1168. Aerosol adhesive products used on the interior of the building (defined as inside of the weatherproofing system) must meet either emissions requirements of CDPH SECTION 01350 (limit requirements for either office or classroom spaces regardless of space type) or VOC content requirements of GS-36. Provide current product certification documentation from certification body.

1.4 DELIVERY, STORAGE, AND HANDLING

Deliver materials to the site in the manufacturer's original wrappings and packages clearly labeled with the manufacturer's name, brand name, size, dye lot number, and related information. Remove materials from packaging and store them in a clean, dry, well ventilated area protected from damage, soiling, and moisture, and maintain at a temperature above 60 degrees F for 2 days prior to installation. Do not store carpet near materials that may off gas or emit harmful fumes, such as kerosene heaters, fresh paint, or adhesives.

1.5 AMBIENT CONDITIONS

Maintain areas in which carpeting is to be installed at a temperature above 60 degrees F and below 90 degrees F for 2 days before installation, during installation, and for 2 days after installation. Provide temporary ventilation during work of this section. Maintain a minimum temperature of 55 degrees F thereafter for the duration of the contract.

1.6 WARRANTY

Provide manufacturer's standard performance guarantees or warranties

including minimum ten year wear warranty, two year material and workmanship and ten year tuft bind and delamination.

PART 2 PRODUCTS

2.1 PRODUCT SUSTAINABILITY CRITERIA

For products in this section, where applicable and to extent allowed by performance criteria, provide and document the following:

Recycled Content for Carpeting Materials Recycled content is identified for some products in this section; provide documentation in accordance with Section 01 33 29 SUSTAINABILITY REPORTING paragraph RECYCLED CONTENT. Other products listed in this section may be available with recycled content; identify those products that meet project requirements for recycled content, and provide documentation in accordance with Section 01 33 29 SUSTAINABILITY REPORTING paragraph RECYCLED CONTENT. 2.1.1 Reduce Volatile Organic Compounds (VOC) (LOW-EMITTING MATERIALS) for Products

Reduced VOC content is identified for some products in this section; provide documentation in accordance with Section 01 33 29 SUSTAINABILITY REPORTING paragraph REDUCE VOLATILE ORGANIC COMPOUNDS (VOC) (LOW-EMITTING MATERIALS). Other products listed in this section may be available with reduced VOC content; identify those products that meet project requirements for reduced VOC content, and provide documentation in accordance with Section 01 33 29 SUSTAINABILITY REPORTING paragraph REDUCE VOLATILE ORGANIC COMPOUNDS (VOC) (LOW-EMITTING MATERIALS).

2.2 CARPET

Furnish first quality carpet; free of visual blemishes, streaks, poorly dyed areas, fuzzing of pile yarn, spots or stains, and other physical and manufacturing defects. Provide carpet materials and treatments as reasonably nonallergenic and free of other recognized health hazards. Provide a static control construction on all grade carpets which gives adequate durability and performance. Submit manufacturer's catalog data and printed documentation stating physical characteristics, durability, resistance to fading, and flame resistance characteristics for each type of carpet material and installation accessory. Submit manufacturer's catalog data for 1) Carpet, 2) Carpet Cushion, and 3) Moldings. Also, submit samples of the following:

a. Carpet: Two "Production Quality" samples 18 by 18 inches of each carpet proposed for use, showing quality, pattern, and color specified

b. Moldings: Two pieces of each type at least 12 inches long

2.2.1 Recycled Content

Carpeting must contain a minimum of 20 percent post-consumer recycled content, or a minimum of 10 percent post-industrial recycled content. Provide data identifying percentage of recycled content for carpeting.

Provide certification of indoor air quality for carpet.

2.2.2 Physical Characteristics for Modular Tile Carpet

2.2.2.1 Carpet Construction

Patterned Loop

2.2.2.2 Type

Modular tile 24 by 24 inch square with 0.15 percent growth/shrink rate in accordance with ISO 2551. See Section 09 69 33.00 22 LOW PROFILE ACCESS FLOORING for size required for a one to one alignment with raised access floor panels.

2.2.2.3 Pile Type

Patterned Loop

2.2.2.4 Pile Fiber

Commercial 100 percent branded (federally registered trademark) nylon continuous filament with permanent stain resistance.

2.2.2.5 Gauge or Pitch

Minimum 5/64 inch in accordance with ASTM D5793

2.2.2.6 Stitches or Rows/Wires

Minimum 9.6 per square inch

2.2.2.7 Surface Pile Weight

Minimum 18 ounces per square yard. This does not include weight of backings. Determine weight in accordance with ASTM D5848.

2.2.2.8 Pile Thickness

Minimum 0.187 inch in accordance with ASTM D6859

2.2.2.9 Pile Density

Minimum 7,535

2.2.2.10 Dye Method

Solution dyed

2.2.2.11 Backing Materials

Provide primary backing materials like non-woven synthetic material. Provide secondary backing to suit project requirements of those customarily used and accepted by the trade for each type of carpet.

2.2.2.12 Attached Cushion

Provide an attached cushion chemically frothed polyurethane with minimum weight of 18 oz/sq. yard, minimum density of 11 lb/cubic foot. Do not exceed the maximum ash content of 50 percent when tested in accordance with ASTM D297. Pass the accelerated aging test in accordance with ASTM D1667 for the cushion.

2.3 PERFORMANCE REQUIREMENTS

2.3.1 Static Control

Provide static control to permanently regulate static buildup to less than 1.8 kV when tested at 20 percent relative humidity and 70 degrees F in accordance with AATCC 134.

2.3.2 Flammability and Critical Radiant Flux Requirements

Comply with 16 CFR 1630. Provide carpet in corridors and exits with a minimum average critical radiant flux of 0.45 watts per square centimeter when tested in accordance with ASTM E648.

2.3.3 Tuft Bind

Comply with ASTM D1335 for tuft bind force required to pull a tuft or loop free from carpet backing with a minimum 8 pound average force for modular carpet tile.

2.3.4 Colorfastness to Crocking

Comply dry and wet crocking with AATCC 165 and with a Class 4 minimum rating on the AATCC Color Transference Chart for all colors.

2.3.5 Colorfastness to Light

Comply colorfastness to light with AATCC 16, Test Option E "Water-Cooled Xenon-Arc Lamp, Continuous Light" and with a minimum 4 grey scale rating after 40 hours.

2.3.6 Colorfastness to Water

Comply colorfastness to water with AATCC 107 and with a minimum 4.0 gray scale rating and a minimum 4.0 transfer scale rating.

2.3.7 Delamination Strength

Provide delamination strength for tufted carpet with a secondary back of minimum 2.5 lbs/inch.

2.3.8 Antimicrobial

Nontoxic antimicrobial treatment in accordance with AATCC 174 Part I (qualitative), guaranteed by the carpet manufacturer to last the life of the carpet.

2.4 CARPET CUSHION

2.4.1 Fiber Cushion

Synthetic with minimum 20 percent recycled content. Provide data identifying percentage of recycled content for fiber cushion.

Provide certification of indoor air quality for fiber cushion.

2.4.1.1 Thickness

0.087 inches plus 5 percent maximum

2.4.1.2 Density

65.0 lb/cu.ft.

2.4.2 Performance Requirements - Critical Radiant Flux

Provide carpet cushion in corridors and exits with a minimum average critical radiant flux of 0.45 watts per square centimeter when tested in accordance with ASTM E648.

2.5 ADHESIVES AND CONCRETE PRIMER

Comply with applicable regulations regarding toxic and hazardous materials. Provide release adhesive for modular tile carpet as recommended by the carpet manufacturer. Provide adhesives flashpoint of minimum 140 degrees F in accordance with ASTM D3278. Provide certification of indoor air quality for aerosol adhesives. Provide certification of indoor air quality for non-aerosol adhesives. Provide certification of indoor air quality for concrete primer.

2.6 MOLDINGS

Provide carpet moldings where floor covering material changes or carpet edge does not abut a vertical surface. Provide an aluminum molding, pinless clamp-down type, designed for the type of carpet being installed. Provide natural color anodized finish. Provide a floor flange of a minimum 1-1/2 inch wide and face a minimum 5/8 inch wide. Provide floor flange of a minimum 1 1/2 inches wide.

2.7 COLOR, TEXTURE, AND PATTERN

Provide color, texture, and pattern in accordance with the drawings.

PART 3 EXECUTION

3.1 SURFACE PREPARATION

Do not install carpet on surfaces that are unsuitable and will prevent a proper installation. Prepare subfloor in accordance with flooring manufacturer's recommended instructions. Repair holes, cracks, depressions, or rough areas using material recommended by the carpet or adhesive manufacturer. Free floor of any foreign materials and sweep clean. Before beginning work, test subfloor with glue and carpet to determine "open time" and bond. Submit three copies of the manufacturer's printed installation instructions for the carpet, including preparation of substrate, seaming techniques, and recommended adhesives and tapes.

3.2 MOISTURE AND ALKALINITY TESTS

Test concrete slab for moisture content and excessive alkalinity in accordance with CRI CIS. Submit three copies of test reports of moisture and alkalinity content of concrete slab stating date of test, person conducting the test, and the area tested.

3.3 PREPARATION OF CONCRETE SUBFLOOR

Do not commence installation of the carpeting until concrete substrate is at least 90 days old. Prepare the concrete surfaces in accordance with the carpet manufacturer's instructions. Match carpet, when required, and adhesives to prevent off-gassing to a type of curing compounds, leveling agents, and concrete sealer.

3.4 INSTALLATION

Perform all work by manufacturer's approved installers. Conduct installation in accordance with the manufacturer's printed instructions and CRI CIS. Protect edges of carpet meeting hard surface flooring with molding and install in accordance with the molding manufacturer's printed instructions. Follow ventilation, personal protection, and other safety precautions recommended by the adhesive manufacturer. Continue ventilation during installation and for at least 72 hours following installation. Do not permit traffic or movement of furniture or equipment in carpeted area for 24 hours after installation. Complete other work which would damage the carpet prior to installation of carpet. Submit three copies of installation drawings for 1) Carpet, 2) Carpet Cushion, and 3) Moldings indicating areas receiving carpet, carpet types, patterns, direction of pile, location of seams, and locations of edge molding.

Do not install building construction materials that show visual evidence of biological growth.

3.4.1 Modular Tile Installation

Install modular tiles with permanent vinyl-compatible adhesive and snug joints. Use vertical ashlar installation method. Provide accessibility to the subfloor where required. See Section 09 69 33.00 22 LOW PROFILE ACCESS FLOORING SYSTEM for installation method of carpet tile on access flooring.

3.5 CLEANING AND PROTECTION

Submit three copies of carpet manufacturer's maintenance instructions describing recommended type of cleaning equipment and material, spotting and cleaning methods, and cleaning cycles.

3.5.1 Cleaning

As specified in Section 01 78 00 CLOSEOUT SUBMITTALS. After installation of the carpet, remove debris, scraps, and other foreign matter. Remove soiled spots and adhesive from the face of the carpet with appropriate spot remover. Cut off and remove protruding face yarn. Vacuum carpet clean.

3.5.2 Protection

Protect the installed carpet from soiling and damage with heavy, reinforced, nonstaining kraft paper, plywood, or hardboard sheets. Lap and secure edges of kraft paper protection to provide a continuous cover. Restrict traffic for at least 48 hours. Remove protective covering when directed by the Contracting Officer.

3.6 REMNANTS

Manage waste as specified in the Waste Management Plan. Provide remnants remaining from the installation, consisting of scrap pieces more than 2 feet in dimension with more than 6 square feet total to the Government. Set aside and return non-retained scraps to manufacturer for recycling into new product.

3.7 MAINTENANCE

3.7.1 Extra Materials

Provide extra material from same dye lot consisting of uncut carpet tiles for future maintenance. Provide a minimum of 5 percent of total square yards of each carpet type, pattern, and color.

Provide Maintenance Service operations information.

-- End of Section --

SECTION 09 69 33.00 22

LOW PROFILE ACCESS FLOOR SYSTEM
07/15

PART 1 GENERAL

1.1 REFERENCES

The publications listed below form a part of this specification to the extent referenced. The publications are referred to within the text by the basic designation only.

ASTM INTERNATIONAL (ASTM)

ASTM A653/A653M	(2013) Standard Specification for Steel Sheet, Zinc-Coated (Galvanized) or Zinc-Iron Alloy-Coated (Galvannealed) by the Hot-Dip Process
ASTM E84	(2014) Standard Test Method for Surface Burning Characteristics of Building Materials

ICC EVALUATION SERVICE, INC. (ICC-ES)

ICC ES AC151	(2007) Acceptance Criteria For Fixed-Height, Low Profile, Raised Floor systems

UNDERWRITERS LABORATORIES (UL)

UL 514A	(2013) Metallic Outlet Boxes

1.2 SYSTEM DESCRIPTION

Low-profile access floor system consisting of a series of modular, removable, interchangeable raised floor components with integral recessed channels to accommodate electrical, voice and data service cable. The access floor system is set directly on the structural subfloor which supports all loads transferred thru the access floor system; the over all height of the low profile system is no more than 3 inches above the surface of the structural floor. Floor system must comply with ICC ES AC151 Fixed-height, Low-Profile, Raised Floor Systems; International Code Council - Evaluation Services (ICC-ES).

Note: the low profile access floor system is non-combustible and has a Class A Frame Spread Rating, but it cannot be a component of a fire rated assembly.

1.3 COUNTRY OF ORIGIN

Access floor materials must comply with the provisions outlined in Federal Acquisition Regulation Subpart 25.2 "Buy American Act" - Construction Materials. Low-profile access floor base units must be marked with country-of-origin.

1.4 PERFORMANCE REQUIREMENTS

Structural Requirements

1. Concentrated Live Load Performance Over an Area of 6.25 square feet (2.5 feet x 2.5 feet): Minimum concentrated live-load capacity of low-profile access floor system, in pounds (lbs), when applied uniformly over this area and located so as to produce the maximum load effects in the structural member, must conform to the IBC or local code requirements, whichever is the more stringent, but with a factor of safety of five must not be less than: 2,000 lbs.

2. Concentrated Live Load Performance Over an Area of 1 square inch (1 inch x 1 inch): Minimum concentrated live-load capacity of low-profile access floor system, in pounds per square inch (psi), when applied uniformly over this area and located so as to produce the maximum load effects in the structural member, must conform to the IBC or local code requirements, whichever is the more stringent, but at 0.1" deflection and 0.06" set and a factor of safety of two must not be not less than: 200 psi.

3. Uniform Live Load Performance over Entire Floor Area: Minimum uniformly-distributed-live load capacity of low-profile access floor system, in pounds per square foot (psf), must conform to the IBC or local code requirements, whichever is the more stringent, but at maximum defection of L/240 or 0.15" and 0.06-inch set, must not be less than: 100 psf.

4. Seismic requirements: not applicable for this Low Profile Access Floor product since the elevation of the floor is less than 3" above the structural sub-floor.

Electrical Requirements

1. All wiring/cabling installed under the floor must conform to the applicable sections of the National Electrical Code (NEC) in effect.

2. The low-profile access floor is not part of the grounding system, and is not intended to enclose splices or other types of wiring that are required to be enclosed in raceway as defined in the NEC, Art. 100.

3. Low-profile access floor system is not intended for use as a duct, plenum or air handling space. As such, non-plenum rated cabling is permitted within the low-profile access floor.

1.5 SUBMITTALS

Government approval is required for submittals with a "G" designation; submittals not having a "G" designation are for Contractor Quality Control approval. When used, a designation following the "G" designation identifies the office that will review the submittal for the Government. Submit the following in accordance with Section 01 33 00 SUBMITTAL PROCEDURES:

SD-02 Shop Drawings

Measured drawings and details; G, ID

SD-03 Product Data

Low profile access flooring; G, ID

Manufacturer's Literature and Data; G, ID

SD-04 Samples

Low profile access flooring; G, ID

SD-07 Certificates

Flame Spread Rating

1.6 DELIVERY, STORAGE. AND HANDLING

Deliver materials to the site in the manufacturer's original unopened containers with brand name and type clearly marked. Carefully handle and store materials in dry, watertight enclosures.

1.7 ENVIRONMENTAL REQUIREMENTS

All access floor components must be stored at ambient temperature between 50 to 90 degrees F for at least 24 hours before installation begins. All areas of installation must be enclosed and maintained at ambient temperature between 50 to 90 degrees F and at relative humidity level between 20 percent to 80 percent, and must remain within these environmental limits throughout occupancy.

1.8 SCHEDULING

Complete and dry interior finish work such as plastering and suspended ceiling before commencing access floor installation. Complete mechanical, electrical, and other work above the ceiling line; install and start operating heating, ventilating, and air conditioning systems in order to maintain temperature and humidity requirements.

1.9 WARRANTY

Provide manufacturer's standard performance guarantees or warranties that extend beyond a one year period. Include an agreement to repair or replace floor panels that fail within the warranty period in the standard performance guarantee or warranty.

1.10 EXTRA MATERIALS

See note at Part 3 below for additional material that is to be provided to the client at the completion of the installation.

1.11 Shop Drawings

Access floor fabricator must provide measured drawings and details of the proposed access floor system.

1.12 Other Submittals Requirements

The following must be submitted:

a. Manufacturer's literature and data indicating percentage of recycle material in the low-profile access floor system to verify affirmative

procurement compliance.

b. Flame Spread Rating verifying the floor system has a Class A rating as per ASTM E84.

c. Seismic Calculations: not applicable for this Low Profile Access Floor product since the raised floor elevation is less than 3" above the structural sub-floor.

PART 2 PRODUCTS

2.1 LOW PROFILE ACCESS FLOORING

Low-profile access floor system consisting of a series of modular, removable, interchangeable steel base units, corner plates, channel plates, border units and accessories that form an accessible under floor cavity to accommodate electrical, voice and data service cable. System must include the following features:

1. System must be gravity held on a structural subfloor system designed to support all loads transferred thru the access floor system.

2. All flooring system structural components must be steel. Reinforcing legs must be structural aluminum.

3. Maximum height from subfloor to top of access flooring system must not exceed 3 inches. Edge ramps from structural floor up to access floor must be provided by the access floor manufacturer.

4. Floor units must be removable by one person without the need for tools or special lifting devices.

2.1.1 Access Floor Components

1. Standard Floor Components: ASTM A653/A653M Galvanized Steel

   a. Standard Floor Panel Unit: 15 inches x 15 inches x 2.76 inches, nominal dimensions. All steel, smooth surfaces with integral support legs.
   b. Corner Plate: 8 inches x 8 inches nominal.
   c. Channel Plate: 12 inches x 5 inches, nominal.
   d. Under Sheet: 3.5 feet x 300 feet, non-combustible, Class A, 2 mil thickness. The Under Sheet is laid down over the structural floor and acts to stabilize the metal access flooring components that are installed on top of the sheet; the under sheet also provides sound attenuation, preventing direct contact between the metal floor components and the structural floor.
   e. Provide manufacture's standard ramp and perimeter support construction of width and slope indicated but not steeper of 1:12, of hte same materials. performane. and construciton requirements as adaptive cabling distribution access flooring.
   f. Provide fascia closures wehre underfloor cavity is not enclosed by abutting walls or other construction, provide stainless-steel frame closure assembly with NO. 4 finish. Provide galvanized-steel frame-anchor component.

2. Reinforced Floor Components - ASTM A653/A653M Galvanized Steel

   a. Contractor to supply manufacturer's recommended components to

structurally support flooring. Reinforced Floor Panel Unit: similar to above

b. Corner Plate: similar to above with four 0.625 inch diameter 2011-T3 aluminum reinforced support leg secured in offset pre-punched center openings.
c. Channel Plate: similar to above with two 0.625 inch diameter 2011-T3 aluminum reinforced support leg secured in offset pre-punched center openings.
d. Under Sheet: similar to above

3. Floor Edge Components - ASTM A653/A653M Galvanized Steel

   a. Half Panel Unit
   b. Half Channel
   c. L-type Edge

4. Floor Components

   a. Sloped edge ramp: 1:12 slope, steel
   b. External angle ramp: 1:12 slope
   c. Internal angle ramp: 1:12 slope

5. Electrical Boxes: Receptacles as specified in floor outlet boxes section 26 20 00 INTERIOR DISTRIBUTION SYSTEM. Number of outlet and face plate type as indicated on electrical drawings.. Electrical boxes must be adjustable and concrete tight. Each outlet box: consisting of cast-metal body with threaded openings,or sheet steel body with knockouts for conduits. Telecommunications outlets: consisting of heavy duty 8P8C dual molded plugs, gang device plate. Outlet face plate must be perpendicular to floor and have cut out to fit typical four ports single gang decive plate. Receptacle outlets to be heavy duty duplex, two pole, three-wire grunding, 20A,25V,NEMA WD 6,Configuration 5-20R, unless otherwise indicated. Factory wired for field hardwiring with armored cable, containing three insulated No. 12 AEG solid copper conductors, terminated with pig tail. Receptable face plte must be perpendicular with floor and have cut out to fit typical duplex gang device plate.Electrical boxes must comply with UL 514A.

2.2 FINISH FLOOR

Provide floor system accessories as required to accommodate a standard 2 foot x 2 foot carpet tile floor finish.

PART 3 EXECUTION

3.1 EXAMINATION

1. Prior to installation, the General Contractor must provide subfloor's that are dry and free of any surface irregularities that could reasonably be anticipated to adversely affect access flooring system appearance or performance.

2. Minimum Subfloor Flatness (FF=25) and Subfloor Levelness (FL=20) must be achieved by others.

3. The General Contractor must provide clear access to subfloor area free of construction debris and other trades throughout installation of access floor system.

3.2 PREPARATION

Verify dimensions on contract drawings, including level of interfaces including abutting floor, ledges and doorsills. Complete any necessary subfloor preparation, and vacuum clean subfloor to remove dust, dirt, and construction debris before beginning installation.

3.3 INSTALLATION

Schedule pre-installation conference between manufacturer's representative, installer, contractor's representative and any applicable trade representatives to review: floor starting location, schedule, availability of materials, installation personnel, equipment and facilities needed to make progress and avoid delays. In addition, review connections with mechanical and electrical systems.

Installation must only be performed by trained installers with experience in installation of the low-profile access floor system under supervision of access-flooring manufacturer's authorized representative and in accordance with the manufacturer's installation instructions.

Electrical boxes and openings must be established so that work does not interfere with the integrity of the flooring system.

During installation, all traffic on access floor must be controlled by access floor installer such that the floor capacity is never exceeded.

Access floor installer must keep the subfloor broom clean as installation progresses.

Under-sheet must be placed over subfloor without wrinkles.

3.4 PROTECTION

After installation of low-profile access floor, all traffic on low-profile access floor must be controlled by the General Contractor. No traffic must be permitted on the access floor that exceeds the published floor capacity.

Provide 1/2-inch minimum protective sheathing over all partially - or fully - completed floors per manufacturer's requirements, before approved construction or delivery traffic is permitted travel on the access floor. It is the General Contractor's responsibility to ensure that wheel loads do not exceed the floor capacity.

3.5 EXTRA STOCK

A. Furnish extra materials described below that match product installed and that are packaged with protective covering for storage and identified with labels describing contents.

1. Base Units: 2 percent
2. Corner Plates: 2 percent
3. Channel Plates: 2 percent

-- End of Section --

SECTION 09 90 00

PAINTS AND COATINGS
05/11

PART 1 GENERAL

1.1 REFERENCES

The publications listed below form a part of this specification to the extent referenced. The publications are referred to within the text by the basic designation only.

AMERICAN CONFERENCE OF GOVERNMENTAL INDUSTRIAL HYGIENISTS (ACGIH)

ACGIH 0100	(2015) Documentation of the Threshold Limit Values and Biological Exposure Indices

ASTM INTERNATIONAL (ASTM)

ASTM C920	(2014a) Standard Specification for Elastomeric Joint Sealants
ASTM D235	(2002; R 2012) Mineral Spirits (Petroleum Spirits) (Hydrocarbon Dry Cleaning Solvent)
ASTM D4214	(2007; R 2015) Standard Test Method for Evaluating the Degree of Chalking of Exterior Paint Films
ASTM D4263	(1983; R 2012) Indicating Moisture in Concrete by the Plastic Sheet Method
ASTM D4444	(2013) Use and Calibration of Hand-Held Moisture Meters
ASTM D523	(2014) Standard Test Method for Specular Gloss
ASTM D6386	(2010) Standard Practice for Preparation of Zinc (Hot-Dip Galvanized) Coated Iron and Steel Product and Hardware Surfaces for Painting
ASTM F1869	(2016) Measuring Moisture Vapor Emission Rate of Concrete Subfloor Using Anhydrous Calcium Chloride

MASTER PAINTERS INSTITUTE (MPI)

MPI 1	(Oct 2009) Aluminum Paint
MPI 107	(Oct 2009) Rust Inhibitive Primer (Water-Based)
MPI 139	(Oct 2009) Interior High Performance Latex, MPI Gloss Level 3

MPI 141	(Oct 2009) Interior High Performance Latex MPI Gloss Level 5
MPI 39	(Oct 2009) Interior Latex-Based Wood Primer
MPI 4	(Oct 2009) Interior/Exterior Latex Block Filler
MPI 45	(Oct 2009) Interior Alkyd Primer Sealer
MPI 46	(Oct 2009) Interior Enamel Undercoat
MPI 47	(Oct 2009) Interior Alkyd, Semi-Gloss, MPI Gloss Level 5
MPI 50	(Oct 2009) Interior Latex Primer Sealer
MPI 52	(Oct 2009) Interior Latex, MPI Gloss Level 3
MPI 56	(Oct 2009) Interior Oil Modified Urethane Clear Gloss
MPI 57	(Oct 2009) Interior Oil Modified Urethane Clear Satin
MPI 60	(Oct 2009) Interior/Exterior Latex Floor Paint, Low Gloss
MPI 79	(Oct 2009) Alkyd Anti-Corrosive Metal Primer
MPI 90	(Oct 2009) Interior Wood Stain, Semi-Transparent
MPI 95	(Oct 2009) Quick Drying Primer for Aluminum

SCIENTIFIC CERTIFICATION SYSTEMS (SCS)

SCS SP-01	(2000) Environmentally Preferable Product Specification for Architectural and Anti-Corrosive Paints

SOCIETY FOR PROTECTIVE COATINGS (SSPC)

SSPC 7/NACE No.4	(2007; E 2004) Brush-Off Blast Cleaning
SSPC PA 1	(2000; E 2004) Shop, Field, and Maintenance Painting of Steel
SSPC PA Guide 3	(1982; E 1995) A Guide to Safety in Paint Application
SSPC SP 1	(2015) Solvent Cleaning
SSPC SP 10/NACE No. 2	(2007) Near-White Blast Cleaning
SSPC SP 12/NACE No.5	(2002) Surface Preparation and Cleaning of

	Metals by Waterjetting Prior to Recoating
SSPC SP 2	(1982; E 2000; E 2004) Hand Tool Cleaning
SSPC SP 3	(1982; E 2004) Power Tool Cleaning
SSPC SP 6/NACE No.3	(2007) Commercial Blast Cleaning
SSPC VIS 1	(2002; E 2004) Guide and Reference Photographs for Steel Surfaces Prepared by Dry Abrasive Blast Cleaning
SSPC VIS 3	(2004) Guide and Reference Photographs for Steel Surfaces Prepared by Hand and Power Tool Cleaning
SSPC VIS 4/NACE VIS 7	(1998; E 2000; E 2004) Guide and Reference Photographs for Steel Surfaces Prepared by Waterjetting

U.S. ARMY CORPS OF ENGINEERS (USACE)

EM 385-1-1	(2014) Safety and Health Requirements Manual

U.S. GENERAL SERVICES ADMINISTRATION (GSA)

FED-STD-313	(2014; Rev E) Material Safety Data, Transportation Data and Disposal Data for Hazardous Materials Furnished to Government Activities

U.S. GREEN BUILDING COUNCIL (USGBC)

LEED NC	(2009) Leadership in Energy and Environmental Design(tm) New Construction Rating System

U.S. NATIONAL ARCHIVES AND RECORDS ADMINISTRATION (NARA)

29 CFR 1910.1000	Air Contaminants

1.2 SUBMITTALS

Government approval is required for submittals with a "G" designation; submittals not having a "G" designation are for Contractor Quality Control approval. Submittals with an "S" are for inclusion in the Sustainability Notebook, in conformance to Section 01 33 29 SUSTAINABILITY REPORTING. Submit the following in accordance with Section 01 33 00 SUBMITTAL PROCEDURES:

The current MPI, "Approved Product List" which lists paint by brand, label, product name and product code as of the date of contract award, will be used to determine compliance with the submittal requirements of this specification. The Contractor may choose to use a subsequent MPI "Approved Product List", however, only one list may be used for the entire contract and each coating system is to be from a single manufacturer. All coats on a particular substrate must be from a single manufacturer. No variation from the MPI Approved Products List is acceptable.

Samples of specified materials may be taken and tested for compliance with specification requirements.

In keeping with the intent of Executive Order 13101, "Greening the Government through Waste Prevention, Recycling, and Federal Acquisition", products certified by SCS as meeting SCS SP-01 shall be given preferential consideration over registered products. Products that are registered shall be given preferential consideration over products not carrying any EPP designation.

SD-02 Shop Drawings

SD-03 Product Data

Local/Regional Materials; (LEED NC)

Submit documentation indicating distance between manufacturing facility and the project site. Indicate distance of raw material origin from the project site. Indicate relative dollar value of local/regional materials to total dollar value of products included in project.

Environmental Data

Materials; (LEED NC)

Submit documentation indicating percentage of post-industrial and post-consumer recycled content per unit of product. Indicate relative dollar value of recycled content products to total dollar value of products included in project.

Coating; G

Manufacturer's Technical Data Sheets; (LEED)

Indicate VOC content.

Sealant

SD-04 Samples

Color; G

Submit manufacturer's samples of paint colors. Cross reference color samples to color scheme as indicated.

SD-07 Certificates

Applicator's qualifications

Qualification Testing laboratory for coatings; G

SD-08 Manufacturer's Instructions

Application instructions

Mixing

Detailed mixing instructions, minimum and maximum application temperature and humidity, potlife, and curing and drying times between coats.

Manufacturer's Material Safety Data Sheets

Submit manufacturer's Material Safety Data Sheets for coatings, solvents, and other potentially hazardous materials, as defined in FED-STD-313.

SD-10 Operation and Maintenance Data

Coatings:; G

Preprinted cleaning and maintenance instructions for all coating systems shall be provided.

SD-11 Closeout Submittals

1.3 APPLICATOR'S QUALIFICATIONS

1.3.1 Contractor Qualification

All contractors and subcontractors that perform surface preparation or coating application shall be certified by the Society for Protective Coatings (formerly Steel Structures Painting Council) (SSPC) to remain certified while accomplishing any surface preparation or coating application. The painting contractors and painting subcontractors must remain so certified for the duration of the project. If a contractor's or subcontractor's certification expires, the firm will not be allowed to perform any work until the certification is reissued. Requests for extension of time for any delay to the completion of the project due to an inactive certification will not be considered and liquidated damages will apply. Notify the Contracting Officer of any change in contractor certification status.

1.4 QUALITY ASSURANCE

1.4.1 Field Samples and Tests

The Contracting Officer may choose up to two coatings that have been delivered to the site to be tested at no cost to the Government. Take samples of each chosen product as specified in the paragraph "Sampling Procedures." Test each chosen product as specified in the paragraph "Testing Procedure." Products which do not conform, shall be removed from

the job site and replaced with new products that conform to the referenced specification. Testing of replacement products that failed initial testing shall be at no cost to the Government.

1.4.1.1 Sampling Procedure

The Contracting Officer will select paint at random from the products that have been delivered to the job site for sample testing. The Contractor shall provide one quart samples of the selected paint materials. The samples shall be taken in the presence of the Contracting Officer, and labeled, identifying each sample. Provide labels in accordance with the paragraph "Packaging, Labeling, and Storage" of this specification.

1.4.1.2 Testing Procedure

Provide Batch Quality Conformance Testing for specified products, as defined by and performed by MPI. As an alternative to Batch Quality Conformance Testing, the Contractor may provide Qualification Testing for specified products above to the appropriate MPI product specification, using the third-party laboratory approved under the paragraph "Qualification Testing" laboratory for coatings. The qualification testing lab report shall include the backup data and summary of the test results. The summary shall list all of the reference specification requirements and the result of each test. The summary shall clearly indicate whether the tested paint meets each test requirement. Note that Qualification Testing may take 4 to 6 weeks to perform, due to the extent of testing required.

Submit name, address, telephone number, FAX number, and e-mail address of the independent third party laboratory selected to perform testing of coating samples for compliance with specification requirements. Submit documentation that laboratory is regularly engaged in testing of paint samples for conformance with specifications, and that employees performing testing are qualified. If the Contractor chooses MPI to perform the Batch Quality Conformance testing, the above submittal information is not required, only a letter is required from the Contractor stating that MPI will perform the testing.

1.5 REGULATORY REQUIREMENTS

1.5.1 Environmental Protection

In addition to requirements specified elsewhere for environmental protection, provide coating materials that conform to the restrictions of the local Air Pollution Control District and regional jurisdiction. Notify Contracting Officer of any paint specified herein which fails to conform.

1.5.2 Lead Content

Do not use coatings having a lead content over 0.06 percent by weight of nonvolatile content.

1.5.3 Chromate Content

Do not use coatings containing zinc-chromate or strontium-chromate.

1.5.4 Asbestos Content

Materials shall not contain asbestos.

1.5.5 Mercury Content

Materials shall not contain mercury or mercury compounds.

1.5.6 Silica

Abrasive blast media shall not contain free crystalline silica.

1.5.7 Human Carcinogens

Materials shall not contain ACGIH 0100 confirmed human carcinogens (A1) or suspected human carcinogens (A2).

1.6 PACKAGING, LABELING, AND STORAGE

Paints shall be in sealed containers that legibly show the contract specification number, designation name, formula or specification number, batch number, color, quantity, date of manufacture, manufacturer's formulation number, manufacturer's directions including any warnings and special precautions, and name and address of manufacturer. Pigmented paints shall be furnished in containers not larger than 5 gallons. Paints and thinners shall be stored in accordance with the manufacturer's written directions, and as a minimum, stored off the ground, under cover, with sufficient ventilation to prevent the buildup of flammable vapors, and at temperatures between 40 to 95 degrees F. Do not store paint, polyurethane, varnish, or wood stain products with materials that have a high capacity to adsorb VOC emissions, including materials which are woven, fibrous or porous in nature such as acoustical ceilings, carpets, and textiles. Do not store paint, polyurethane, varnish, or wood stain products in occupied spaces.

1.7 SAFETY AND HEALTH

Apply coating materials using safety methods and equipment in accordance with the following:

Work shall comply with applicable Federal, State, and local laws and regulations, and with the ACCIDENT PREVENTION PLAN, including the Activity Hazard Analysis as specified in Section 01 35 26 GOVERNMENT SAFETY REQUIREMENTS and in Appendix A of EM 385-1-1. The Activity Hazard Analysis shall include analyses of the potential impact of painting operations on painting personnel and on others involved in and adjacent to the work zone.

1.7.1 Safety Methods Used During Coating Application

Comply with the requirements of SSPC PA Guide 3.

1.7.2 Toxic Materials

To protect personnel from overexposure to toxic materials, conform to the most stringent guidance of:

a. The applicable manufacturer's Material Safety Data Sheets (MSDS) or local regulation.

b. 29 CFR 1910.1000.

c. ACGIH 0100, threshold limit values.

1.8 ENVIRONMENTAL CONDITIONS

Comply, at minimum, with manufacturer recommendations for space ventilation during and after installation. Isolate area of application from rest of building when applying high-emission paints or coatings.

1.8.1 Coatings

Do not apply coating when air or substrate conditions are:

a. Less than 5 degrees F above dew point;

b. Below 50 degrees F or over 95 degrees F, unless specifically pre-approved by the Contracting Officer and the product manufacturer. Under no circumstances shall application conditions exceed manufacturer recommendations.

1.8.2 Post-Application

Vacate space for as long as possible after application. Wait a minimum of 48 hours before occupying freshly painted rooms. Maintain one of the following ventilation conditions during the curing period, or for 72 hours after application:

a. Supply 100 percent outside air 24 hours a day.

b. Supply airflow at a rate of 6 air changes per hour, when outside temperatures are between 55 degrees F and 85 degrees F and humidity is between 30 percent and 60 percent.

c. Supply airflow at a rate of 1.5 air changes per hour, when outside air conditions are not within the range stipulated above.

1.9 SUSTAINABLE DESIGN REQUIREMENTS

1.9.1 Local/Regional Materials

Use materials or products extracted, harvested, or recovered, as well as manufactured, within a 500 mile radius from the project site, if available from a minimum of three sources.1.9.2 Environmental Data

1.10 SCHEDULING

Allow paint, polyurethane, varnish, and wood stain installations to cure prior to the installation of materials that adsorb VOCs, including carpet and acoustical ceiling panels.

1.11 COLOR SELECTION

Colors of finish coats shall be as indicated or specified. Where not indicated or specified, colors shall be selected by the Designer of Record . Manufacturers' names and color identification are used for the purpose of color identification only. Named products are acceptable for use only if they conform to specified requirements. Products of other manufacturers are acceptable if the colors approximate colors indicated and the product conforms to specified requirements.

Color, texture, and pattern of wall coating systems shall be as indicated on the contract drawings.

1.12 LOCATION AND SURFACE TYPE TO BE PAINTED

1.12.1 Painting Included

Where a space or surface is indicated to be painted, include the following unless indicated otherwise.

a. Surfaces behind portable objects and surface mounted articles readily detachable by removal of fasteners, such as screws and bolts.

b. New factory finished surfaces that require identification or color coding and factory finished surfaces that are damaged during performance of the work.

c. Existing coated surfaces that are damaged during performance of the work.

1.12.1.1 Exterior Painting

Includes new surfaces, existing coated surfaces, and existing uncoated surfaces, of the building and appurtenances. Also included are existing coated surfaces made bare by cleaning operations.

1.12.1.2 Interior Painting

Includes new surfaces, existing uncoated surfaces, and existing coated surfaces of the building and appurtenances as indicated and existing coated surfaces made bare by cleaning operations. Where a space or surface is indicated to be painted, include the following items, unless indicated otherwise.

a. Exposed columns, girders, beams, joists, and metal deck; and

b. Other contiguous surfaces.

1.12.2 Painting Excluded

Do not paint the following unless indicated otherwise.

a. Surfaces concealed and made inaccessible by panelboards, fixed ductwork, machinery, and equipment fixed in place.

b. Surfaces in concealed spaces. Concealed spaces are defined as enclosed spaces above suspended ceilings, furred spaces, attic spaces, crawl spaces, elevator shafts and chases.

c. Steel to be embedded in concrete.

d. Copper, stainless steel, aluminum, brass, and lead except existing coated surfaces.

e. Hardware, fittings, and other factory finished items.

1.12.3 Mechanical and Electrical Painting

Includes field coating of interior and exterior new and existing surfaces.

a. Where a space or surface is indicated to be painted, include the following items unless indicated otherwise.

(1) Exposed piping, conduit, and ductwork;

(2) Supports, hangers, air grilles, and registers;

(3) Miscellaneous metalwork and insulation coverings.

b. Do not paint the following, unless indicated otherwise:

(1) New zinc-coated, aluminum, and copper surfaces under insulation

(2) New aluminum jacket on piping

(3) New interior ferrous piping under insulation.

1.12.3.1 Fire Extinguishing Sprinkler Systems

Clean, pretreat, prime, and paint new fire extinguishing sprinkler systems including valves, piping, conduit, hangers, supports, miscellaneous metalwork, and accessories. Apply coatings to clean, dry surfaces, using clean brushes. Clean the surfaces to remove dust, dirt, rust, and loose mill scale. Immediately after cleaning, provide the metal surfaces with one coat primer per schedules. Shield sprinkler heads with protective covering while painting is in progress. Upon completion of painting, remove protective covering from sprinkler heads. Remove sprinkler heads which have been painted and replace with new sprinkler heads. Provide primed surfaces with the following:

a. Piping in Unfinished Areas: Provide primed surfaces with one coat of red alkyd gloss enamel applied to a minimum dry film thickness of 1.0 mil in attic spaces, spaces above suspended ceilings, crawl spaces, pipe chases, mechanical equipment room, and spaces where walls or ceiling are not painted or not constructed of a prefinished material.

b. Piping in Finished Areas: Provide primed surfaces with two coats of paint to match adjacent surfaces, except provide valves and operating accessories with one coat of red alkyd gloss enamel applied to a minimum dry film thickness of 1.0 mil. Provide piping with 2 inch wide red enamel bands or self-adhering red plastic bands spaced at maximum of 20 foot intervals throughout the piping systems.

1.12.4 Definitions and Abbreviations

1.12.4.1 Qualification Testing

Qualification testing is the performance of all test requirements listed in the product specification. This testing is accomplished by MPI to qualify each product for the MPI Approved Product List, and may also be accomplished by Contractor's third party testing lab if an alternative to Batch Quality Conformance Testing by MPI is desired.

1.12.4.2 Batch Quality Conformance Testing

Batch quality conformance testing determines that the product provided is the same as the product qualified to the appropriate product specification. This testing shall only be accomplished by MPI testing lab.

1.12.4.3 Coating

A film or thin layer applied to a base material called a substrate. A coating may be a metal, alloy, paint, or solid/liquid suspensions on various substrates (metals, plastics, wood, paper, leather, cloth, etc.). They may be applied by electrolysis, vapor deposition, vacuum, or mechanical means such as brushing, spraying, calendaring, and roller coating. A coating may be applied for aesthetic or protective purposes or both. The term "coating" as used herein includes emulsions, enamels, stains, varnishes, sealers, epoxies, and other coatings, whether used as primer, intermediate, or finish coat. The terms paint and coating are used interchangeably.

1.12.4.4 DFT or dft

Dry film thickness, the film thickness of the fully cured, dry paint or coating.

1.12.4.5 DSD

Degree of Surface Degradation, the MPI system of defining degree of surface degradation. Five (5) levels are generically defined under the Assessment sections in the MPI Maintenance Repainting Manual.

1.12.4.6 EPP

Environmentally Preferred Products, a standard for determining environmental preferability in support of Executive Order 13101.

1.12.4.7 EXT

MPI short term designation for an exterior coating system.

1.12.4.8 INT

MPI short term designation for an interior coating system.

1.12.4.9 micron / microns

The metric measurement for 0.001 mm or one/one-thousandth of a millimeter.

1.12.4.10 mil / mils

The English measurement for 0.001 in or one/one-thousandth of an inch, equal to 25.4 microns or 0.0254 mm.

1.12.4.11 mm

The metric measurement for millimeter, 0.001 meter or one/one-thousandth of a meter.

1.12.4.12 MPI Gloss Levels

MPI system of defining gloss. Seven (7) gloss levels (G1 to G7) are generically defined under the Evaluation sections of the MPI Manuals.

Traditionally, Flat refers to G1/G2, Eggshell refers to G3, Semigloss refers to G5, and Gloss refers to G6.

Gloss levels are defined by MPI as follows:

Gloss Level	Description	Units at 60 degrees	Units at 85 degrees
G1	Matte or Flat	0 to 5	10 max
G2	Velvet	0 to 10	10 to 35
G3	Eggshell	10 to 25	10 to 35
G4	Satin	20 to 35	35 min
G5	Semi-Gloss	35 to 70	
G6	Gloss	70 to 85	
G7	High Gloss		

Gloss is tested in accordance with ASTM D523. Historically, the Government has used Flat (G1 / G2), Eggshell (G3), Semi-Gloss (G5), and Gloss (G6).

1.12.4.13 MPI System Number

The MPI coating system number in each Division found in either the MPI Architectural Painting Specification Manual or the Maintenance Repainting Manual and defined as an exterior (EXT/REX) or interior system (INT/RIN). The Division number follows the CSI Master Format.

1.12.4.14 Paint

See Coating definition.

1.12.4.15 REX

MPI short term designation for an exterior coating system used in repainting projects or over existing coating systems.

1.12.4.16 RIN

MPI short term designation for an interior coating system used in repainting projects or over existing coating systems.

PART 2 PRODUCTS

2.1 MATERIALS

Conform to the coating specifications and standards referenced in PART 3. Submit manufacturer's technical data sheets for specified coatings and solvents. Comply with applicable regulations regarding toxic and hazardous materials.

PART 3 EXECUTION

3.1 PROTECTION OF AREAS AND SPACES NOT TO BE PAINTED

Prior to surface preparation and coating applications, remove, mask, or otherwise protect, hardware, hardware accessories, machined surfaces, radiator covers, plates, lighting fixtures, public and private property, and other such items not to be coated that are in contact with surfaces to

be coated. Following completion of painting, workmen skilled in the trades involved shall reinstall removed items. Restore surfaces contaminated by coating materials, to original condition and repair damaged items.

3.2 RESEALING OF EXISTING EXTERIOR JOINTS

3.2.1 Surface Condition

Surfaces shall be clean, dry to the touch, and free from frost and moisture; remove grease, oil, wax, lacquer, paint, defective backstop, or other foreign matter that would prevent or impair adhesion. Where adequate grooves have not been provided, clean out to a depth of 1/2 inch and grind to a minimum width of 1/4 inch without damage to adjoining work. Grinding shall not be required on metal surfaces.

3.2.2 Backstops

In joints more than 1/2 inch deep, install glass fiber roving or neoprene, butyl, polyurethane, or polyethylene foams free of oil or other staining elements as recommended by sealant manufacturer. Backstop material shall be compatible with sealant. Do not use oakum and other types of absorptive materials as backstops.

3.2.3 Primer and Bond Breaker

Install the type recommended by the sealant manufacturer.

3.2.4 Ambient Temperature

Between 38 degrees F and 95 degrees F when applying sealant.

3.2.5 Exterior Sealant

For joints in vertical surfaces, provide ASTM C920, Type S or M, Grade NS, Class 25, Use NT. For joints in horizontal surfaces, provide ASTM C920, Type S or M, Grade P, Class 25, Use T. Color(s) shall be selected by the Contracting Officer. Apply the sealant in accordance with the manufacturer's printed instructions. Force sealant into joints with sufficient pressure to fill the joints solidly. Sealant shall be uniformly smooth and free of wrinkles.

3.2.6 Cleaning

Immediately remove fresh sealant from adjacent areas using a solvent recommended by the sealant manufacturer. Upon completion of sealant application, remove remaining smears and stains and leave the work in a clean condition. Allow sealant time to cure, in accordance with manufacturer's recommendations, prior to coating.

3.3 SURFACE PREPARATION

Remove dirt, splinters, loose particles, grease, oil, disintegrated coatings, and other foreign matter and substances deleterious to coating performance as specified for each substrate before application of paint or surface treatments. Oil and grease shall be removed prior to mechanical cleaning. Cleaning shall be programmed so that dust and other contaminants will not fall on wet, newly painted surfaces. Exposed ferrous metals such as nail heads on or in contact with surfaces to be

painted with water-thinned paints, shall be spot-primed with a suitable corrosion-inhibitive primer capable of preventing flash rusting and compatible with the coating specified for the adjacent areas.

3.3.1 Additional Requirements for Preparation of Surfaces With Existing Coatings

Before application of coatings, perform the following on surfaces covered by soundly-adhered coatings, defined as those which cannot be removed with a putty knife:

a. Test existing finishes for lead before sanding, scraping, or removing. If lead is present, refer to paragraph Toxic Materials.

b. Wipe previously painted surfaces to receive solvent-based coatings, except stucco and similarly rough surfaces clean with a clean, dry cloth saturated with mineral spirits, ASTM D235. Allow surface to dry. Wiping shall immediately precede the application of the first coat of any coating, unless specified otherwise.

c. Sand existing glossy surfaces to be painted to reduce gloss. Brush, and wipe clean with a damp cloth to remove dust.

d. The requirements specified are minimum. Comply also with the application instructions of the paint manufacturer.

e. Previously painted surfaces specified to be repainted damaged during construction shall be thoroughly cleaned of all grease, dirt, dust or other foreign matter.

f. Blistering, cracking, flaking and peeling or other deteriorated coatings shall be removed.

g. Chalk shall be removed so that when tested in accordance with ASTM D4214, the chalk resistance rating is no less than 8.

h. Slick surfaces shall be roughened. Damaged areas such as, but not limited to, nail holes, cracks, chips, and spalls shall be repaired with suitable material to match adjacent undamaged areas.

i. Edges of chipped paint shall be feather edged and sanded smooth.

j. Rusty metal surfaces shall be cleaned as per SSPC requirements. Solvent, mechanical, or chemical cleaning methods shall be used to provide surfaces suitable for painting.

k. New, proposed coatings shall be compatible with existing coatings.

3.3.2 Existing Coated Surfaces with Minor Defects

Sand, spackle, and treat minor defects to render them smooth. Minor defects are defined as scratches, nicks, cracks, gouges, spalls, alligatoring, chalking, and irregularities due to partial peeling of previous coatings. Remove chalking by sanding so that when tested in accordance with ASTM D4214, the chalk rating is not less than 8.

3.3.3 Removal of Existing Coatings

Remove existing coatings from the following surfaces:

a. Surfaces containing large areas of minor defects;

b. Surfaces containing more than 20 percent peeling area; and

c. Surfaces designated by the Contracting Officer, such as surfaces where rust shows through existing coatings.

3.3.4 Substrate Repair

a. Repair substrate surface damaged during coating removal;

b. Sand edges of adjacent soundly-adhered existing coatings so they are tapered as smooth as practical to areas involved with coating removal; and

c. Clean and prime the substrate as specified.

3.4 PREPARATION OF METAL SURFACES

3.4.1 Existing and New Ferrous Surfaces

a. Ferrous Surfaces including Shop-coated Surfaces and Small Areas That Contain Rust, Mill Scale and Other Foreign Substances: Solvent clean or detergent wash in accordance with SSPC SP 1 to remove oil and grease. Where shop coat is missing or damaged, clean according to SSPC SP 2, , , or . Brush-off blast remaining surface in accordance with SSPC 7/NACE No.4; Shop-coated ferrous surfaces shall be protected from corrosion by treating and touching up corroded areas immediately upon detection.

b. Surfaces With More Than 20 Percent Rust, Mill Scale, and Other Foreign Substances: Clean entire surface in accordance with SSPC SP 6/NACE No.3/SSPC SP 12/NACE No.5 WJ-3.

3.4.2 Final Ferrous Surface Condition:

For tool cleaned surfaces, the requirements are stated in SSPC SP 2 and SSPC SP 3. As a visual reference, cleaned surfaces shall be similar to photographs in SSPC VIS 3.

For abrasive blast cleaned surfaces, the requirements are stated in SSPC 7/NACE No.4, SSPC SP 6/NACE No.3, and SSPC SP 10/NACE No. 2. As a visual reference, cleaned surfaces shall be similar to photographs in SSPC VIS 1.

For waterjet cleaned surfaces, the requirements are stated in SSPC SP 12/NACE No.5. As a visual reference, cleaned surfaces shall be similar to photographs in SSPC VIS 4/NACE VIS 7.

3.4.3 Galvanized Surfaces

a. New or Existing Galvanized Surfaces With Only Dirt and Zinc Oxidation Products: Clean with solvent, steam, or non-alkaline detergent solution in accordance with SSPC SP 1. If the galvanized metal has been passivated or stabilized, the coating shall be completely removed by brush-off abrasive blast. New galvanized steel to be coated shall not be "passivated" or "stabilized" If the absence of hexavalent stain inhibitors is not documented, test as described in ASTM D6386,

Appendix X2, and remove by one of the methods described therein.

b. Galvanized with Slight Coating Deterioration or with Little or No Rusting: Water jetting to SSPC SP 12/NACE No.5 WJ3 to remove loose coating from surfaces with less than 20 percent coating deterioration and no blistering, peeling, or cracking. Use inhibitor as recommended by the coating manufacturer to prevent rusting.

c. Galvanized With Severe Deteriorated Coating or Severe Rusting: Spot abrasive blast rusted areas as described for steel in SSPC SP 6/NACE No.3, and waterjet to SSPC SP 12/NACE No.5, WJ3 to remove existing coating.

3.4.4 Non-Ferrous Metallic Surfaces

Aluminum and aluminum-alloy, lead, copper, and other nonferrous metal surfaces.

Surface Cleaning: Solvent clean in accordance with SSPC SP 1 and wash with mild non-alkaline detergent to remove dirt and water soluble contaminants.

3.4.5 Terne-Coated Metal Surfaces

Solvent clean surfaces with mineral spirits, ASTM D235. Wipe dry with clean, dry cloths.

3.4.6 Existing Surfaces with a Bituminous or Mastic-Type Coating

Remove chalk, mildew, and other loose material by washing with a solution of 1/2 cup trisodium phosphate, 1/4 cup household detergent, one quart 5 percent sodium hypochlorite solution and 3 quarts of warm water.

3.5 PREPARATION OF CONCRETE AND CEMENTITIOUS SURFACE

3.5.1 Concrete and Masonry

a. Curing: Concrete, stucco and masonry surfaces shall be allowed to cure at least 30 days before painting, except concrete slab on grade, which shall be allowed to cure 90 days before painting.

b. Surface Cleaning: Remove the following deleterious substances.

(1) Dirt, Chalking, Grease, and Oil: Wash new and existing uncoated surfaces with a solution composed of 1/2 cup trisodium phosphate, 1/4 cuphousehold detergent, and 4 quarts of warm water. Then rinse thoroughly with fresh water. Wash existing coated surfaces with a suitable detergent and rinse thoroughly. For large areas, water blasting may be used.

(2) Fungus and Mold: Wash new , existing coated, and existing uncoated surfaces with a solution composed of 1/2 cup trisodium phosphate, 1/4 cup household detergent, 1 quart 5 percent sodium hypochlorite solution and 3 quarts of warm water. Rinse thoroughly with fresh water.

(3) Paint and Loose Particles: Remove by wire brushing.

(4) Efflorescence: Remove by scraping or wire brushing followed by

washing with a 5 to 10 percent by weight aqueous solution of hydrochloric (muriatic) acid. Do not allow acid to remain on the surface for more than five minutes before rinsing with fresh water. Do not acid clean more than 4 square feet of surface, per workman, at one time.

c. Cosmetic Repair of Minor Defects: Repair or fill mortar joints and minor defects, including but not limited to spalls, in accordance with manufacturer's recommendations and prior to coating application.

d. Allowable Moisture Content: Latex coatings may be applied to damp surfaces, but not to surfaces with droplets of water. Do not apply epoxies to damp vertical surfaces as determined by ASTM D4263 or horizontal surfaces that exceed 3 lbs of moisture per 1000 square feet in 24 hours as determined by ASTM F1869. In all cases follow manufacturers recommendations. Allow surfaces to cure a minimum of 30 days before painting.

3.5.2 Gypsum Board, Plaster, and Stucco

a. Surface Cleaning: Plaster and stucco shall be clean and free from loose matter; gypsum board shall be dry. Remove loose dirt and dust by brushing with a soft brush, rubbing with a dry cloth, or vacuum-cleaning prior to application of the first coat material. A damp cloth or sponge may be used if paint will be water-based.

b. Repair of Minor Defects: Prior to painting, repair joints, cracks, holes, surface irregularities, and other minor defects with patching plaster or spackling compound and sand smooth.

c. Allowable Moisture Content: Latex coatings may be applied to damp surfaces, but not surfaces with droplets of water. Do not apply epoxies to damp surfaces as determined by ASTM D4263. New plaster to be coated shall have a maximum moisture content of 8 percent, when measured in accordance with ASTM D4444, Method A, unless otherwise authorized. In addition to moisture content requirements, allow new plaster to age a minimum of 30 days before preparation for painting.

3.6 PREPARATION OF WOOD AND PLYWOOD SURFACES

3.6.1 New , Existing Uncoated, and Existing Coated Plywood and Wood Surfaces, Except Floors:

a. Wood surfaces shall be cleaned of foreign matter.

Surface Cleaning: Surfaces shall be free from dust and other deleterious substances and in a condition approved by the Contracting Officer prior to receiving paint or other finish. Do not use water to clean uncoated wood. Scrape to remove loose coatings. Lightly sand to roughen the entire area of previously enamel-coated wood surfaces.

c. Moisture content of the wood shall not exceed 12 percent as measured by a moisture meter in accordance with ASTM D4444, Method A, unless otherwise authorized.

d. Wood surfaces adjacent to surfaces to receive water-thinned paints shall be primed and/or touched up before applying water-thinned paints.

e. Cracks and Nailheads: Set and putty stop nailheads and putty cracks

after the prime coat has dried.

f. Cosmetic Repair of Minor Defects:

(1) Knots and Resinous Wood and Fire, Smoke, Water, and Color Marker Stained Existing Coated Surface: Prior to application of coating, cover knots and stains with two or more coats of 3-pound-cut shellac varnish, plasticized with 5 ounces of castor oil per gallon. Scrape away existing coatings from knotty areas, and sand before treating. Prime before applying any putty over shellacked area.

(2) Open Joints and Other Openings: Fill with whiting putty, linseed oil putty. Sand smooth after putty has dried.

(3) Checking: Where checking of the wood is present, sand the surface, wipe and apply a coat of pigmented orange shellac. Allow to dry before paint is applied.

3.6.2 Interior Wood Surfaces, Stain Finish

Interior wood surfaces to receive stain shall be sanded. Oak and other open-grain wood to receive stain shall be given a coat of wood filler not less than 8 hours before the application of stain; excess filler shall be removed and the surface sanded smooth.

3.7 APPLICATION

3.7.1 Coating Application

Painting practices shall comply with applicable federal, state and local laws enacted to insure compliance with Federal Clean Air Standards. Apply coating materials in accordance with SSPC PA 1. SSPC PA 1 methods are applicable to all substrates, except as modified herein.

At the time of application, paint shall show no signs of deterioration. Uniform suspension of pigments shall be maintained during application.

Unless otherwise specified or recommended by the paint manufacturer, paint may be applied by brush, roller, or spray. Use trigger operated spray nozzles for water hoses. Rollers for applying paints and enamels shall be of a type designed for the coating to be applied and the surface to be coated. Wear protective clothing and respirators when applying oil-based paints or using spray equipment with any paints.

Paints, except water-thinned types, shall be applied only to surfaces that are completely free of moisture as determined by sight or touch.

Thoroughly work coating materials into joints, crevices, and open spaces. Special attention shall be given to insure that all edges, corners, crevices, welds, and rivets receive a film thickness equal to that of adjacent painted surfaces.

Each coat of paint shall be applied so dry film shall be of uniform thickness and free from runs, drops, ridges, waves, pinholes or other voids, laps, brush marks, and variations in color, texture, and finish. Hiding shall be complete.

Touch up damaged coatings before applying subsequent coats. Interior areas shall be broom clean and dust free before and during the application of coating material.

a. Drying Time: Allow time between coats, as recommended by the coating manufacturer, to permit thorough drying, but not to present topcoat adhesion problems. Provide each coat in specified condition to receive next coat.

b. Primers, and Intermediate Coats: Do not allow primers or intermediate coats to dry more than 30 days, or longer than recommended by manufacturer, before applying subsequent coats. Follow manufacturer's recommendations for surface preparation if primers or intermediate coats are allowed to dry longer than recommended by manufacturers of subsequent coatings. Each coat shall cover surface of preceding coat or surface completely, and there shall be a visually perceptible difference in shades of successive coats.

c. Finished Surfaces: Provide finished surfaces free from runs, drops, ridges, waves, laps, brush marks, and variations in colors.

d. Thermosetting Paints: Topcoats over thermosetting paints (epoxies and urethanes) should be applied within the overcoating window recommended by the manufacturer.

3.7.2 Mixing and Thinning of Paints

Reduce paints to proper consistency by adding fresh paint, except when thinning is mandatory to suit surface, temperature, weather conditions, application methods, or for the type of paint being used. Obtain written permission from the Contracting Officer to use thinners. The written permission shall include quantities and types of thinners to use.

When thinning is allowed, paints shall be thinned immediately prior to application with not more than 1 pint of suitable thinner per gallon. The use of thinner shall not relieve the Contractor from obtaining complete hiding, full film thickness, or required gloss. Thinning shall not cause the paint to exceed limits on volatile organic compounds. Paints of different manufacturers shall not be mixed.

3.7.3 Two-Component Systems

Two-component systems shall be mixed in accordance with manufacturer's instructions. Any thinning of the first coat to ensure proper penetration and sealing shall be as recommended by the manufacturer for each type of substrate.

3.7.4 Coating Systems

a. Systems by Substrates: Apply coatings that conform to the respective specifications listed in the following Tables:

Table

Division 3. Exterior Concrete Paint Table
Division 4. Exterior Concrete Masonry Units Paint Table
Division 5. Exterior Metal, Ferrous and Non-Ferrous Paint Table

Table

Division 6. Exterior Wood; Dressed Lumber, Paneling, Decking, Shingles Paint Table
Division 9: Exterior Stucco Paint Table
Division 10. Exterior Cloth Coverings and Bituminous Coated Surfaces Paint Table

Division 3. Interior Concrete Paint Table
Division 4. Interior Concrete Masonry Units Paint Table
Division 5. Interior Metal, Ferrous and Non-Ferrous Paint Table
Division 6. Interior Wood Paint Table
Division 9: Interior Plaster, Gypsum Board, Textured Surfaces Paint Table

b. Minimum Dry Film Thickness (DFT): Apply paints, primers, varnishes, enamels, undercoats, and other coatings to a minimum dry film thickness of 1.5 mil each coat unless specified otherwise in the Tables. Coating thickness where specified, refers to the minimum dry film thickness.

c. Coatings for Surfaces Not Specified Otherwise: Coat surfaces which have not been specified, the same as surfaces having similar conditions of exposure.

d. Existing Surfaces Damaged During Performance of the Work, Including New Patches In Existing Surfaces: Coat surfaces with the following:

(1) One coat of primer.

(2) One coat of undercoat or intermediate coat.

(3) One topcoat to match adjacent surfaces.

e. Existing Coated Surfaces To Be Painted: Apply coatings conforming to the respective specifications listed in the Tables herein, except that pretreatments, sealers and fillers need not be provided on surfaces where existing coatings are soundly adhered and in good condition. Do not omit undercoats or primers.

3.8 COATING SYSTEMS FOR METAL

Apply coatings of Tables in Division 5 for Exterior and Interior.

a. Apply specified ferrous metal primer on the same day that surface is cleaned, to surfaces that meet all specified surface preparation requirements at time of application.

b. Inaccessible Surfaces: Prior to erection, use one coat of specified primer on metal surfaces that will be inaccessible after erection.

c. Shop-primed Surfaces: Touch up exposed substrates and damaged coatings to protect from rusting prior to applying field primer.

d. Surface Previously Coated with Epoxy or Urethane: Apply MPI 101, 1.5 mils DFT immediately prior to application of epoxy or urethane coatings.

e. Pipes and Tubing: The semitransparent film applied to some pipes and tubing at the mill is not to be considered a shop coat, but shall be

overcoated with the specified ferrous-metal primer prior to application of finish coats.

f. Exposed Nails, Screws, Fasteners, and Miscellaneous Ferrous Surfaces. On surfaces to be coated with water thinned coatings, spot prime exposed nails and other ferrous metal with latex primer MPI 107.

3.9 COATING SYSTEMS FOR CONCRETE AND CEMENTITIOUS SUBSTRATES

Apply coatings of Tables in Division 3, 4 and 9 for Exterior and Interior.

3.10 COATING SYSTEMS FOR WOOD AND PLYWOOD

a. Apply coatings of Tables in Division 6 for Exterior and Interior.

b. Prior to erection, apply two coats of specified primer to treat and prime wood and plywood surfaces which will be inaccessible after erection.

c. Apply stains in accordance with manufacturer's printed instructions.

3.11 INSPECTION AND ACCEPTANCE

In addition to meeting previously specified requirements, demonstrate mobility of moving components, including swinging and sliding doors, cabinets, and windows with operable sash, for inspection by the Contracting Officer. Perform this demonstration after appropriate curing and drying times of coatings have elapsed and prior to invoicing for final payment.

3.12 WASTE MANAGEMENT

As specified in the Waste Management Plan and as follows. Do not use kerosene or any such organic solvents to clean up water based paints. Properly dispose of paints or solvents in designated containers. Close and seal partially used containers of paint to maintain quality as necessary for reuse. Store in protected, well-ventilated, fire-safe area at moderate temperature. Place materials defined as hazardous or toxic waste in designated containers. Where local options exist for leftover paint recycling, collect all waste paint by type and provide for delivery to recycling or collection facility for reuse by local organizations.

3.13 PAINT TABLES

All DFT's are minimum values. Use only interior paints and coatings that meet VOC requirements of LEED low emitting materials credit. Acceptable products are listed in the MPI Green Approved Products List, available at http://www.specifygreen.com/APL/ProductIdxByMPInum.asp.

3.13.1 INTERIOR PAINT TABLES

DIVISION 3: INTERIOR CONCRETE PAINT TABLE

A. New and uncoated existing and Existing, previously painted Concrete, vertical surfaces, not specified otherwise:

1. Latex

DIVISION 3: INTERIOR CONCRETE PAINT TABLE

New; MPI INT 3.1A-G3 (Eggshell) / Existing; MPI RIN 3.1A-G3 (Eggshell)

Primer:	Intermediate:	Topcoat:
MPI 50	MPI 52	MPI 52

System DFT: 4 mils

2.

3.

E. New and uncoated existing concrete floors in following areas Storage, mechanical:

1. Latex Floor Paint

New; MPI INT 3.2A-G2 (Flat) / Existing; MPI RIN 3.2A-G2 (Flat)

Primer:	Intermediate:	Topcoat:
MPI 60	MPI 60	MPI 60

System DFT: 5 mils

2.

3.

Note: Primer may be reduced for penetration per manufacturer's instructions.

DIVISION 4: INTERIOR CONCRETE MASONRY UNITS PAINT TABLE

A. New Concrete masonry:

1. High Performance Architectural Latex

MPI INT 4.2D-G3 (Eggshell)

Filler	Primer:	Intermediate:	Topcoat:
MPI 4	N/A	MPI 139	MPI 139

System DFT: 11 mils

DIVISION 4: INTERIOR CONCRETE MASONRY UNITS PAINT TABLE

Fill all holes in masonry surface

2.

B. Existing, previously painted Concrete masonry:

1. High Performance Architectural Latex

MPI RIN 4.2K-G3 (Eggshell)

Spot Primer:	Intermediate:	Topcoat:
MPI 50	MPI 139	MPI 139

System DFT: 4.5 mils

2.

DIVISION 5: INTERIOR METAL, FERROUS AND NON-FERROUS PAINT TABLE

INTERIOR STEEL / FERROUS SURFACES

A. Metal, Mechanical, Electrical, Fire extinguishing sprinkler systems including valves, conduit, hangers, supports, Surfaces adjacent to painted surfaces (Match surrounding finish), exposed copper piping, and miscellaneous metal items not otherwise specified except floors, hot metal surfaces, and new prefinished equipment:

1. High Performance Architectural Latex

MPI INT 5.1R-G5 (Semigloss)

Primer:	Intermediate:	Topcoat:
MPI 79	MPI 141	MPI 141

System DFT: 5 mils

2.

D. Ferrous metal in concealed damp spaces or in exposed areas having unpainted adjacent surfaces as follows:

1. Aluminum Paint

MPI INT 5.1M

Primer:	Intermediate:	Topcoat:
MPI 79	MPI 1	MPI 1

System DFT: 4.25 mils

E. Miscellaneous non-ferrous metal items not otherwise specified except floors, hot metal surfaces, and new prefinished equipment. Match surrounding finish:

1. High Performance Architectural Latex

MPI INT 5.4F-G5 (Semigloss)

INTERIOR STEEL / FERROUS SURFACES

Primer:	Intermediate:	Topcoat:
MPI 95	MPI 141	MPI 141

System DFT: 5 mils

2.

DIVISION 6: INTERIOR WOOD PAINT TABLE

A. New Wood and plywood not otherwise specified:

1. High Performance Architectural Latex

MPI INT 6.4S-G5 (Semigloss)

Primer:	Intermediate:	Topcoat:
MPI 39	MPI 141	MPI 141

System DFT: 4.5 mils

2.

3.

B. Existing, previously painted Wood and plywood not otherwise specified:

1. High Performance Architectural Latex

MPI RIN 6.4B-G5 (Semigloss)

Primer:	Intermediate:	Topcoat:

DIVISION 6: INTERIOR WOOD PAINT TABLE

MPI 46	MPI 141	MPI 141

System DFT: 4.5 mils

2.

3.

C. New and Existing, previously finished or stained Wood and Plywood, except floors; natural finish or stained:

1.

2. Stained, oil-modified polyurethane
New; MPI INT 6.4E-G4 / Existing; MPI RIN 6.4G-G4

Stain:	Primer:	Intermediate:	Topcoat:
MPI 90	MPI 57	MPI 57	MPI 57

System DFT: 4 mils

3.

D. New and Existing, previously finished or stained Wood Floors; Natural finish or stained:

1.

2.

3. Stained, oil-modified polyurethane
New; MPI INT 6.5B-G6 (Gloss) / Existing; MPI RIN 6.5B-G6 (Gloss)

DIVISION 6: INTERIOR WOOD PAINT TABLE

Stain:	Primer:	Intermediate:	Topcoat:
MPI 90	MPI 56	MPI 56	MPI 56

System DFT: 4 mils

4.

H. New and Existing, previously finished or stained Wood Doors; Natural Finish or Stained:

1.

2. Stained, oil-modified polyurethane
New; MPI INT 6.3E-G4 / Existing; MPI RIN 6.3E-G4

Stain:	Primer:	Intermediate:	Topcoat:
MPI 90	MPI 57	MPI 57	MPI 57

System DFT: 4 mils

Note: Sand between all coats per manufacturers recommendations.

3.

I. New Wood Doors; Pigmented finish:

1. Alkyd
New; MPI INT 6.3B-G5 (Semigloss)

Primer:	Intermediate:	Topcoat:
MPI 45	MPI 47	MPI 47

System DFT: 4.5 mils

Note: Sand between all coats per manufacturers recommendations.

2.

J. Existing, previously painted Wood Doors; Pigmented finish:

1.

DIVISION 6: INTERIOR WOOD PAINT TABLE

DIVISION 9: INTERIOR PLASTER, GYPSUM BOARD, TEXTURED SURFACES PAINT TABLE

A. New Wallboard not otherwise specified:

1. Latex

New; MPI INT 9.2A-G3 (Eggshell) / Existing; RIN 9.2A-G3 (Eggshell)

Primer:	Intermediate:	Topcoat:
MPI 50	MPI 52	MPI 52

System DFT: 4 mils

2. High Performance Architectural Latex - High Traffic Areas

New; MPI INT 9.2B-G3 (Eggshell) / Existing; MPI RIN 9.2B-G3 (Eggshell)

Primer:	Intermediate:	Topcoat:
MPI 50	MPI 139	MPI 139

System DFT: 4 mils

3.

-- End of Section --

SECTION 10 14 00.10

EXTERIOR SIGNAGE
08/17

PART 1 GENERAL

1.1 REFERENCES

The publications listed below form a part of this specification to the extent referenced. The publications are referred to within the text by the basic designation only.

AMERICAN WELDING SOCIETY (AWS)

AWS D1.1/D1.1M	(2015; Errata 1 2015; Errata 2 2016) Structural Welding Code - Steel
AWS D1.2/D1.2M	(2014) Structural Welding Code - Aluminum

ASTM INTERNATIONAL (ASTM)

ASTM A36/A36M	(2014) Standard Specification for Carbon Structural Steel
ASTM A123/A123M	(2017) Standard Specification for Zinc (Hot-Dip Galvanized) Coatings on Iron and Steel Products
ASTM A653/A653M	(2019) Standard Specification for Steel Sheet, Zinc-Coated (Galvanized) or Zinc-Iron Alloy-Coated (Galvannealed) by the Hot-Dip Process
ASTM A924/A924M	(2018) Standard Specification for General Requirements for Steel Sheet, Metallic-Coated by the Hot-Dip Process
ASTM A1011/A1011M	(2018a) Standard Specification for Steel Sheet and Strip, Hot-Rolled, Carbon, Structural, High-Strength Low-Alloy, High-Strength Low-Alloy with Improved Formability, and Ultra-High Strength

1.2 GENERAL REQUIREMENTS

All exterior signage must be provided by a single manufacturer. Exterior signage must be of the design, detail, sizes, types, and message content shown on the drawings, must conform to the requirements specified, and must be provided at the locations indicated. Submit exterior signage schedule in electronic media with spread sheet format. Spread sheet must include sign location, sign type, and message. Signs must be complete with lettering, framing as detailed, and related components for a complete installation. Each sample must consist of a complete sign panel with letters and symbols. Samples may be installed in the work, provided each sample is identified and location recorded. Submit three color samples for each material requiring color and 12 inch square sample of sign face

color sample.

1.2.1 Wind Load Requirements

Exterior signage must be designed to withstand current Installation determined windload. Submit design analysis and supporting calculations performed in support of specified signage.

1.2.2 Character Proportions and Heights

Letters and numbers on indicated signs for handicapped-accessible buildings must have a width-to-height ratio between 3:5 and 1:1 and a stroke-width-to-height ratio between 1:5 and 1:10. Characters and numbers on indicated signs must be sized according to the viewing distance from which they are to be read. The minimum height is measured using an upper case letter "X". Lower case characters are permitted.

1.3 SUBMITTALS

Government approval is required for submittals with a "G" designation; submittals not having a "G" designation are for Contractor Quality Control approval. Submittals with an "S" are for inclusion in the Sustainability eNotebook, in conformance to Section 01 33 29 SUSTAINABILITY REPORTING. Submit the following in accordance with Section 01 33 00 SUBMITTAL PROCEDURES:

SD-02 Shop Drawings

Approved Detail Drawings; G

SD-03 Product Data

Modular Exterior Signage System

Installation

Exterior Signage; G

Wind Load Requirements

SD-04 Samples

Exterior Signage; G

SD-10 Operation and Maintenance Data

Protection and Cleaning; G

1.4 QUALIFICATIONS

Signs, plaques, and dimensional letters must be the standard product of a manufacturer regularly engaged in the manufacture of the products. Items of equipment must essentially duplicate equipment that has been in satisfactory use at least 2 years prior to bid opening.

1.5 DELIVERY AND STORAGE

Materials must be wrapped for shipment and storage, delivered to the jobsite in manufacturer's original packaging, and stored in a clean, dry

area in accordance with manufacturer's instructions.

1.6 WARRANTY

Manufacturer's standard performance guarantees or warranties that extend beyond a one year period must be provided.

PART 2 PRODUCTS

2.1 MODULAR EXTERIOR SIGNAGE SYSTEM2.1.1 Panel And Post/Panel Type Signs

2.1.1.1 Posts

One-piece aluminum posts must be provided with minimum 0.125 inch wall thickness. Posts must be designed to accept panel framing system described. The post must be designed to permit attachment of panel framing system without exposed fasteners. Caps must be provided for each post.

2.1.1.2 Panel Framing System

Panel framing consisting of aluminum sections and interlocking track components must be designed to interlock with posts with concealed fasteners.

2.1.1.3 Panels

Modular message panels must be provided in sizes shown on drawings. Panels must be fabricated a minimum of 0.125 inch aluminum . Panels with metal return sheeting must have welded corners, ground smooth. Panels must be heliarc welded to framing system.

2.1.1.4 Finishes

Post finish must be semi-gloss baked enamel . Metal panel system finish must be baked enamel .

2.1.1.5 Mounting

Provide permanent mounting by embedding posts in concrete foundation as indicated.

2.2 GRAPHICS FOR EXTERIOR SIGNAGE SYSTEMS

2.2.1 Graphics

Signage graphics must satisfy User and Installation requirements as provide by Contracting Officer:

b. Pressure sensitive precision cut vinyl letters with reflecting surface must be provided.

c. Message must be applied to panel using the silkscreen process. Silkscreened images must be executed with photo screens prepared from original art. Handcut screens will not be accepted. Original art must be defined as artwork that is a first generation pattern of the original specified art. Edges and corners must be clean. Rounded

corners, cut or ragged edges, edge buildup, bleeding or surfaces pinholes will not be accepted.

]

f. Message must be embedded in FRP sheet and completely covered with thermosetting polyester resin. Message must be embedded minimum 1/32 inch. Sheets must be processed in one piece, in one process, to prevent delamination.

g. Message must be applied using the frisket method. Photomechanically reproduced graphic masks must be applied to the sign face which has been coated with the graphics color. A background must then be applied to the exposed surfaces. Handcut masks will not be accepted. Edges that are nicked, cut, or ragged will not be acceptable. A protective overcoat containing UV-resistant additives must be applied.

2.2.2 Messages

See drawings for signage content. Coordinate with Contracting Officer for Installation standards and text requirements.

2.3 METAL PLAQUES

Design and location of plaques must be as indicated.

2.4 STEEL PRODUCTS

Structural steel products must conform to ASTM A36/A36M. Sheet and strip steel products must conform to ASTM A1011/A1011M. Welding for steel products must conform to AWS D1.2/D1.2M.

2.5 ANCHORS AND FASTENERS

Exposed anchor and fastener materials must be compatible with metal to which applied and must match in color and finish and must be non-rusting, non-corroding, and non-staining. Exposed fasteners must be tamper-proof.

2.6 SHOP FABRICATION AND MANUFACTURE

2.6.1 Factory Workmanship

Work must be assembled in the shop, as far as practical, ready for installation at the site. Work that cannot be shop assembled must be given a trial fit in the shop to ensure proper field assembly. Holes for bolts and screws must be drilled or punched. Drilling and punching must produce clean, true lines and surfaces. Welding to or on structural steel must be in accordance with AWS D1.1/D1.1M. Welding must be continuous along the entire area of contact. Exposed welds must be ground smooth. Exposed surfaces of work must have a smooth finish and exposed riveting must be flush. Fastenings must be concealed where practical. Items specified to be galvanized must be by hot-dip process after fabrication if practical. Galvanization must be in accordance with ASTM A123/A123M and ASTM A653/A653M, as applicable. Other metallic coatings of steel sheet must be in accordance with ASTM A924/A924M. Joints exposed to the weather

must be formed to exclude water. Drainage and weep holes must be included as required to prevent condensation buildup.

2.6.2 Dissimilar Materials

Where dissimilar metals are in contact, or where aluminum is in contact with concrete, mortar, masonry, wet or pressure-treated wood, or absorptive materials subject to wetting, the surfaces must be protected with a coat of asphalt varnish or a coat of zinc-molybdate primer to prevent galvanic or corrosive action.

2.6.3 Shop Painting

Surfaces of miscellaneous metal work, except nonferrous metal, corrosion resisting steel, and zinc-coated work, must be given one coat of zinc-molybdate primer or an approved rust-resisting treatment and metallic primer in accordance with manufacturer's standard practice. Surfaces of items to be embedded in concrete must not be painted. Upon completion of work, damaged surfaces must be recoated.

2.7 COLOR, FINISH, AND CONTRAST

Color must be as indicated on the drawings. Color listed is not intended to limit the selection of equal colors from other manufacturers. For buildings required to be handicapped-accessible, the characters and background of signs must be eggshell, matte, or other non-glare finish. Characters and symbols must contrast with their background - either light characters on a dark background or dark characters on a light background.

PART 3 EXECUTION

3.1 INSTALLATION

Signs, plaques, or dimensional letters must be installed in accordance with approved manufacturer's instructions at locations shown on the approved detail drawings; submit drawings showing elevations of each type of sign; dimensions, details, and methods of mounting or anchoring; shape and thickness of materials; and details of construction. A schedule showing the location, each sign type, and message must be included. Circuits installed underground must conform to the requirements of Section 33 71 02 UNDERGROUND ELECTRICAL DISTRIBUTION. Steel conduits installed underground and illuminated signage mounted directly on buildings must be in conformance with the requirements of Section 26 20 00 INTERIOR DISTRIBUTION SYSTEM. Signs must be installed plumb and true at mounting heights indicated, and by method shown or specified. Signs mounted on other surfaces must not be installed until finishes on such surfaces have been completed. Submit manufacturer's installation instructions and cleaning instructions.

3.1.1 Anchorage

Anchorage and fastener materials must be in accordance with approved manufacturer's instructions for the indicated substrate. Anchorage not otherwise specified or indicated must include slotted inserts, expansion shields, and powder-driven fasteners when approved for concrete; toggle bolts and through bolts for masonry; machine carriage bolts for steel; lag bolts and screws for wood.

3.1.2 Protection and Cleaning

The work must be protected against damage during construction. Hardware and electrical equipment must be adjusted for proper operation. Glass, frames, and other sign surfaces must be cleaned in accordance with manufacturer's instructions. After signs are completed and inspected, cover all project identification, directional, and other signs which may mislead the public. Covering must be maintained until instructed to be removed by the Contracting Officer or until the facility is to be opened for business. Submit six copies of maintenance instructions listing routine maintenance procedures, possible breakdowns and repairs, and troubleshooting guides. The instructions must include simplified diagrams for the equipment as installed. Signs must be cleaned, as required, at time of cover removal.

3.2 FIELD PAINTED FINISH

Miscellaneous metals and frames must be field painted in accordance with Section 09 90 00 PAINTS AND COATINGS. Anodized metals, masonry, and glass must be protected from paint. Finish must be free of scratches or other blemishes.

-- End of Section --

SECTION 10 14 00.20

INTERIOR SIGNAGE
11/12

PART 1 GENERAL

1.1 REFERENCES

The publications listed below form a part of this specification to the extent referenced. The publications are referred to in the text by basic designation only.

U.S. NATIONAL ARCHIVES AND RECORDS ADMINISTRATION (NARA)

36 CFR 1191	Americans with Disabilities Act (ADA) Accessibility Guidelines for Buildings and Facilities; Architectural Barriers Act (ABA) Accessibility Guidelines

1.2 SUSTAINABILITY REPORTING

Materials in this technical specification may contribute towards contract compliance with sustainability requirements. See Section 01 33 29 SUSTAINABILITY REPORTING for project certification local/regional materials, recycled content, low emitting materials, and documentation requirements.

1.3 SUBMITTALS

Government approval is required for submittals with a "G" designation; submittals not having a "G" designation are for Contractor Quality Control approval. Submittals with an "S" are for inclusion in the Sustainability Notebook, in conformance to Section 01 33 29 SUSTAINABILITY REPORTING. Submit the following in accordance with Section 01 33 00 SUBMITTAL PROCEDURES:

SD-02 Shop Drawings

Detail Drawings; G

SD-03 Product Data

Installation; G
Warranty; G

SD-04 Samples

Interior Signage; G

SD-10 Operation and Maintenance Data

Approved Manufacturer's Instructions; G
Protection and Cleaning; G

1.4 QUALITY ASSURANCE

1.4.1 Samples

Submit interior signage samples of each of the following sign types showing typical quality, workmanship and color: Standard Room sign. The samples may be installed in the work, provided each sample is identified and location recorded.

1.4.2 Detail Drawings

Submit detail drawings showing elevations of each type of sign, dimensions, details and methods of mounting or anchoring, mounting height, shape and thickness of materials, and details of construction. Include a schedule showing the location, each sign type, and message.

1.5 DELIVERY, STORAGE, AND HANDLING

Materials must be packaged to prevent damage and deterioration during shipment, handling, storage and installation. Product must be delivered to the jobsite in manufacturer's original packaging and stored in a clean, dry area in accordance with manufacturer's instructions.

1.6 WARRANTY

Warrant the interior signage for a period of 2 years against defective workmanship and material. Warranties must be signed by the authorized representative of the manufacturer. Submit warranty accompanied by the document authenticating the signer as an authorized representative of the guarantor. Guarantee that the signage products and the installation are free from any defects in material and workmanship from the date of delivery.

PART 2 PRODUCTS

2.1 STANDARD PRODUCTS

Signs, plaques, directories, and dimensional letters must be the standard product of a manufacturer regularly engaged in the manufacture of such products that essentially duplicate signs that have been in satisfactory use at least 2 years prior to bid opening. Obtain signage from a single manufacturer with edges and corners of finished letterforms and graphics true and clean.

2.2 ROOM IDENTIFICATION/DIRECTIONAL SIGNAGE SYSTEM

2.2.1 Standard Room Signs

Signs must consist of material, dimensions, style and type to match existing interior signage of building.

2.2.2 Type of Mounting For Signs

Provide extruded aluminum brackets for hanging, projecting, and double-sided signs. Mounting for framed, hanging, and projecting signs must be by mechanical fasteners. Surface mounted signs must be mounted with countersunk mounting holes in plaques and mounting screws fabricated from materials that are not corrosive to sign material and mounting surface.

2.2.3 Graphics

Signage graphics for modular signs must match existing interior signage of building.

2.2.4 Character Proportions and Heights

Letters and numbers on signs conform to 36 CFR 1191.

2.2.5 Tactile Letters, Symbols and Braille

Raised letters and numbers on signs must conform to 36 CFR 1191.

2.3 FABRICATION AND MANUFACTURE

2.3.1 Factory Workmanship

Holes for bolts and screws must be drilled or punched. Drilling and punching must produce clean, true lines and surfaces. Exposed surfaces of work must have a smooth finish and exposed riveting must be flush. Fastenings must be concealed where practicable.

2.3.2 Dissimilar Materials

Where dissimilar metals are in contact, the surfaces will be protected to prevent galvanic or corrosive action.

2.4 COLOR, FINISH, AND CONTRAST

Color must be matching existing interior signage of building. Finish of all signs must be eggshell, matte, or other non-glare finish as required in handicapped-accessible buildings.

2.5 TYPEFACE

ADA-ABA compliant font for Room Signs to match existing interior signage of building..

PART 3 EXECUTION

3.1 INSTALLATION

Signs must be installed plumb and true and in accordance with approved manufacturer's instructions at locations shown on the detail drawings . Submit two copies of operating instructions outlining the step-by-step procedures required for system operation. The instructions must include simplified diagrams for the system as installed, the manufacturer's name, model number, service manual, parts list, and brief description of all equipment and their basic operating features. Each set must be permanently bound and must have a hard cover. The following identification must be inscribed on the covers: the words "OPERATING AND MAINTENANCE INSTRUCTIONS", name and location of the facility, name of the Contractor, and contract number. Mounting height and mounting location must conform to 36 CFR 1191. Required blocking must be installed. Signs on doors or other surfaces must not be installed until finishes on such surfaces have been installed. Signs installed on glass surfaces must be installed with matching blank back-up plates in accordance with manufacturer's instructions.

3.1.1 Anchorage

Anchorage must be in accordance with approved manufacturer's instructions. Anchorage not otherwise specified or shown must include slotted inserts, expansion shields, and powder-driven fasteners when approved for concrete; toggle bolts and through bolts for masonry; machine carriage bolts for steel; lag bolts and screws for wood. Exposed anchor and fastener materials must be compatible with metal to which applied and must have matching color and finish.

a. Signs mounted to painted gypsum board surfaces must be removable for painting maintenance.

b. Mount signs mounted to lay-in ceiling grids with clip connections to ceiling tees.

c. Install signs mounted on metal surfaces with magnetic tape.

d. Install signs mounted on fabric surfaces with hook and loop tape or pin mount.

3.1.2 Protection and Cleaning

Protect the work against damage during construction. Hardware and electrical equipment must be adjusted for proper operation. Glass, frames, and other sign surfaces must be cleaned at completion of sign installation in accordance with the manufacturer's approved instructions and the requirements of Section 01 78 23 OPERATION AND MAINTENANCE DATA, Package 1. Submit two copies of maintenance instructions listing routine procedures, repairs, and guides.

-- End of Section --

SECTION 10 26 00

WALL AND DOOR PROTECTION
08/10

PART 1 GENERAL

1.1 REFERENCES

The publications listed below form a part of this specification to the extent referenced. The publications are referred to within the text by the basic designation only.

ASTM INTERNATIONAL (ASTM)

ASTM B221	(2014) Standard Specification for Aluminum and Aluminum-Alloy Extruded Bars, Rods, Wire, Profiles, and Tubes
ASTM D256	(2010) Determining the Izod Pendulum Impact Resistance of Plastics
ASTM D543	(2014) Standard Practices for Evaluating the Resistance of Plastics to Chemical Reagents
ASTM D635	(2014) Standard Test Method for Rate of Burning and/or Extent and Time of Burning of Self-Supporting Plastics in a Horizontal Position
ASTM E84	(2015b) Standard Test Method for Surface Burning Characteristics of Building Materials
ASTM G21	(2015) Determining Resistance of Synthetic Polymeric Materials to Fungi

SOCIETY OF AUTOMOTIVE ENGINEERS INTERNATIONAL (SAE)

SAE J1545	(2005; R 2014) Instrumental Color Difference Measurement for Exterior Finishes, Textiles and Colored Trim

1.2 SUBMITTALS

Government approval is required for submittals with a "G" designation; submittals not having a "G" designation are for Contractor Quality Control approval. When used, a designation following the "G" designation identifies the office that will review the submittal for the Government. Submittals with an "S" are for inclusion in the Sustainability Notebook, in conformance to Section 01 33 29 SUSTAINABILITY REPORTING. Submit the following in accordance with Section 01 33 00 SUBMITTAL PROCEDURES:

SD-02 Shop Drawings

Corner Guards; G, ID

SD-03 Product Data

Corner Guards; G

SD-04 Samples

Finish; G

SD-06 Test Reports

Corner Guards

SD-07 Certificates

Corner Guards

1.3 DELIVERY, STORAGE, AND HANDLING

Deliver materials to the project site in manufacturer's original unopened containers with seals unbroken and labels and trademarks intact. Keep materials dry, protected from weather and damage, and stored under cover. Materials shall be stored at approximately 70 degrees F for at least 48 hours prior to installation.

1.4 WARRANTY

Provide manufacturer's standard performance guarantees or warranties that extend beyond a 1 year period.

PART 2 PRODUCTS

2.1 STANDARD PRODUCTS

To the maximum extent possible, corner guardsmust be the standard products of a single manufacturer and must be furnished as detailed. Drawings show general configuration of products required, and items differing in minor details from those shown will be acceptable.

2.1.1 Resilient Material

Provide resilient material consisting of high impact resistant extruded acrylic vinyl, polyvinyl chloride, or injection molded thermal plastic conforming to the following:

2.1.1.1 Minimum Impact Resistance

Minimum impact resistance must be 18 ft-lbs/sq. inch when tested in accordance with ASTM D256, (Izod impact, ft-lbs per sq inch notched).

2.1.1.2 Fire Rating

Fire rating must be Class 1 when tested in accordance with ASTM E84, having a maximum flame spread of 25 and a smoke developed rating of 450 or less. Material must be rated self extinguishing when tested in accordance

with ASTM D635. Material must be labeled and tested by an approved nationally known testing laboratory. Resilient material used for protection on fire rated doors and frames must be listed by the testing laboratory performing the tests. Resilient material installed on fire rated wood/steel door and frame assemblies must have been tested on similar type assemblies. Test results of material tested on any other combination of door/frame assembly will not be acceptable.

2.1.1.3 Integral Color

Colored components must have integral color and must be matched in accordance with SAE J1545 to within plus or minus 1.0 on the CIE-LCH scales.

2.1.1.4 Chemical and Stain Resistance

Materials must be resistant to chemicals and stains reagents in accordance with ASTM D543.

2.1.1.5 Fungal and Bacterial Resistance

Materials must be resistant to fungi and bacteria in accordance with ASTM G21, as applicable.

2.2 CORNER GUARDS

2.2.1 Resilient Corner Guards

Corner guard units shall be surface mounted type, 1/4 inch radius formed with 2 inch wings and shall be a minimum 0.078 inch thick, and installed over a continuous aluminum retainer. Corner guards must extend from floor to ceiling Mounting hardware, cushions, and base plates shall be furnished. Assembly must consist of a snap-on corner guard formed from high impact resistant resilient material, mounted on a continuous aluminum retainer. Extruded aluminum retainer must conform to ASTM B221, alloy 6063, temper T5 or T6. Factory fabricated end closure caps must be furnished for top and bottom of surface mounted corner guards. Insulating materials that are an integral part of the corner guard system must be provided by the manufacturer of the corner guard system. Exposed metal portions of fire rated assemblies must have a paintable surface.

2.3 TRIM, FASTENERS AND ANCHORS

Provide vinyl trim, fasteners and anchors for each specific installation as shown.

2.4 FINISH

Submit three samples indicating color and texture of materials requiring color and finish.

2.4.1 Resilient Material Finish

Finish for resilient material must be colors in accordance with SAE J1545. Finish and color must be provided as indicated on Contract Drawings.

2.5 ADHESIVES

Adhesive for resilient material must be in accordance with manufacturers recommendations.

2.6 COLOR

Color must be as indicated on Contract Drawings and as selected from manufacturers standard colors should the manufacturer submitteed vary from the basis of design indicated on the Contract Drawings. Color listed is not intended to limit the selection of equal colors from other manufacturers.

PART 3 EXECUTION

3.1 INSTALLATION

3.1.1 Corner Guards

Material shall be mounted at location indicated in accordance with manufacturer's recommendations.

SECTION 12 24 13

ROLLER WINDOW SHADES
08/10

PART 1 GENERAL

1.1 GENERAL REQUIREMENTS

Provide roller window shades, complete with necessary brackets, fittings, and hardware as indicated. Mount and operate equipment in accordance with manufacturer's instructions. Windows to receive a shade shall be completely covered.

a. Submit drawings showing plans, elevations, sections, product details, installation details, operational clearances, wiring diagrams and relationship to adjacent work. Include the use of same room designations as indicated on the drawings.

b. Provide manufacturer's data composed of catalog cuts, brochures, product information, and operating and maintenance instructions on each product to be used. Include styles, profiles and features.

c. Furnish samples of each type and color of roller shade fabric and roller shade channel. Shade material shall be minimum6 by 6 inch in size. Mark face of material to indicate interior faces.

d. Mock up: Install shade in area designated by Contracting Officer. Do not proceed with remaining work until the Contracting Officer approves workmanship and operation. Re-work mock-up as required to produce acceptable work. The approved shade can be used in installation.

e. Submit fire resistance data, flame spread and smoke contribution data.

1.2 REFERENCES

The publications listed below form a part of this specification to the extent referenced. The publications are referred to in the text by basic designation only.

ASTM INTERNATIONAL (ASTM)

ASTM G21	(2015) Determining Resistance of Synthetic Polymeric Materials to Fungi

NATIONAL FIRE PROTECTION ASSOCIATION (NFPA)

NFPA 701	(2015) Standard Methods of Fire Tests for Flame Propagation of Textiles and Films

UNDERWRITERS LABORATORIES (UL)

UL 325	(2013; Reprint May 2015) Door, Drapery, Gate, Louver, and Window Operators and Systems

1.3 SUBMITTALS

Government approval is required for submittals with a "G" designation; submittals not having a "G" designation are for Contractor Quality Control approval. Submittals with an "S" are for inclusion in the Sustainability Notebook, in conformance to Section 01 33 29 SUSTAINABILITY REPORTING. Submit the following in accordance with Section 01 33 00 SUBMITTAL PROCEDURES

SD-02 Shop Drawings

Installation; G

SD-03 Product Data

Window Shades; G

SD-04 Samples

Window Shades; G

SD-06 Test Reports

Window Shades

SD-08 Manufacturer's Instructions

Window Shades

SD-10 Operation and Maintenance Data

Window Shades

1.4 QUALITY ASSURANCE

1.4.1 Qualifications

1.4.1.1 Manufacturer's Qualifications

Obtain motor-controlled roller shades through one source from a single manufacturer with a minimum of twenty years experience and minimum of three projects of similar scope and size in manufacturing products comparable to those specified in this section.

1.4.1.2 Installer's Qualifications

Installer trained and certified by the manufacturer with a minimum of ten years experience in installing products comparable to those specified in this section.

1.4.2 Flammability Requirements

Passes in accordance with NFPA 701 small and large-scale vertical burn. Materials tested shall be identical to products proposed for use.

1.4.3 Electrical Requirements

NFPA Article 100 listed and labeled in accordance with UL 325 or other testing agency acceptable to authorities having jurisdiction, marked for intended use, and tested as a system. Individual testing of components

will no be acceptable in lieu of system testing.

1.4.4 Anti-Microbial Requirements

'No Growth' per ASTM G21 results for fungi ATCC9642, ATCC 9644, ATCC9645.

1.5 DELIVERY, STORAGE, AND HANDLING

Deliver components to the jobsite in the manufacturer's original packaging with the brand or company name, item identification, and project reference clearly marked. Store components in a dry location that is adequately ventilated and free from dust, water, or other contaminants and has easy access for inspection and handling. Store materials flat in a clean dry area with temperature maintained above 50 degrees F. Do not open containers until needed for installation unless verification inspection is required.

1.6 WARRANTY

Provide 10 year minimum limited warranty.

PART 2 PRODUCTS

2.1 WINDOW SHADES

Roller tube shall operate smoothly and be of sufficient diameter and thickness to prevent excessive deflection. Provide brackets that are appropriate for inside mount. The shade cloth shall meet the performance described in NFPA 701, small scale test. Treat steel features for corrosion resistance.

2.1.1 Light Filtering Shades

Provide light filtering window shades to conform with the following:

a. Roller tube shall be extruded aluminum or steel. Diameter, wall thickness, and material to be selected by the manufacturer to accommodate the shade size. Provide roller idler assembly of molded nylon and zinc-plated steel pin. Sliding pin shall allow easy installation and removal of roller. Fabric shall be connected to the roller tube with double sided adhesive specifically developed to attach coated textiles to metal to eliminate horizontal impressions in fabric or attached with a spline lock system.

b. Fascia shall be L-shaped aluminum extrusion to conceal shade roller and hardware that snaps onto end caps without requiring exposed fasteners of any kind. Fascia can be mounted continuously across two or more shade bands.

c. End caps shall be stamped steel with universal design suitable for mounting to window mullions. Provide size compatible with roller size. End cap covers shall match fascia/headbox finish.

d. Provide hardware that allows for field adjustment or removal of shade roller tube and other operable hardware component without requiring removal of brackets and end or center supports. Provide hardware system that allows for operation of multiple shade bands by a single operator. Connectors shall be offset to assure alignment from the first to the last shade band. Provide shade hardware constructed of

minimum 1/8 inch thick plated steel or heavier as required to support 150 percent of the full weight of each shade.

e. Manual Operated Chain Drive Hardware shall provide for universal, regular and offset drive capacity, allowing drive chain to fall at front, rear or non-offset for all shade drive end brackets. Universal offset shall be adjustable for future change. Provide positive mechanical engagement of drive mechanism to shade roller tube. The drive bracket shall be fully integrated with all accessories. Drive chain shall be #10 stainless steel chain rated to 90 lb. minimum breaking strength.

2.1.2 Room Darkening Shades

Provide room darkening (black-out) window shades designed to eliminate all visible light gaps when shades are fully closed, and conform with the following:

a. Roller tube shall be aluminum, controlled by webbing tape . Provide shop fabricated light traps, consisting of a head box to house the shade roller, and U-shaped channels to serve as guides for the shade along the sides and to receive the bottom edge of the shade along the sill.

b. Provide light trap made of sheet steel having a minimum thickness of 22 gauge or anodized, extruded, aluminum. The legs of the channels shall be not less than 1-3/4 inches long and separated by the minimum distance that will permit free operation of the shade. Edges of light trap coming into contact with the shade cloth shall be smooth pile light seal. The exposed face of the head box shall be hinged or removable for access to the shade roller. The interior or unexposed surfaces of the light trap shall have a finish coat of flat black enamel. The exposed portions of the light trap shall have a factory-applied priming coat of gray paint.

c. Cloth shall be of type for blackout purposes. Make the shade from a single piece of canvas duck cloth laminated to vinyl . When not finished with a selvage, the vertical edges of the shade shall be bound or hemmed using a high-grade thread. Make needle holes lightproof by applying a suitable filler.

d. Fit the bottom edge of the shade with a steel operating bar. Shades will engage positively with bottom rail through operating bar or chain pull. Paint bars with flat black enamel. Make pull cords of No. 4 braided nylon or beaded chain having not less than 175 pounds breaking strength.

2.2 COLOR

Provide color, pattern and texture for metal and shade fabric as indicated. Color listed is not intended to limit the selection of equal colors from other manufacturers. Openness factor of shade fabric must be as indicated.

PART 3 EXECUTION

3.1 FIELD MEASUREMENTS

After becoming familiar with details of the work, verify all dimensions in the field, and advise the Contracting Officer of any discrepancy before performing the work.

3.2 ROLLER WINDOW SHADE PLACEMENT SCHEDULE

All exterior windows include dual roller shades.

3.3 INSTALLATION

Perform installation in accordance with the approved detail drawings and manufacturer's installation instructions. Install units level, plumb, secure, and at proper height and location relative to window units. Provide and install supplementary or miscellaneous items in total, including clips, brackets, or anchorages incidental to or necessary for a sound, secure, and complete installation. Do not start installation until completion of room painting and finishing operations.

3.4 CLEAN-UP

Upon completion of the installation, clean window treatments and adjust them for form and appearance and proper operating condition. Repair or replace damaged units as directed by the Contracting Officer. Isolate metal parts from direct contact with concrete, mortar, or dissimilar metals. Ensure shades installed in recessed pockets can be removed without disturbing the pocket. The entire shade, when retracted, shall be contained inside the pocket. For shades installed outside the jambs and mullions, overlap each jamb and mullion 0.75 inch or more when the jamb and mullion sizes permit. Include all hardware, brackets, anchors, fasteners, and accessories necessary for a complete, finished installation.

-- End of Section --

THIS PAGE HAS BEEN INTENTIONALLY LEFT BLANK

SECTION 12 48 13. 13

ENTRANCE FLOOR MATS AND FRAMES
02/14

PART 1 GENERAL

1.1 REFERENCES

The publications listed below form a part of this specification to the extent referenced. The publications are referred to within the text by the basic designation only.

ASTM INTERNATIONAL (ASTM)

ASTM D2047	(2011) Static Coefficient of Friction of Polish-Coated Floor Surfaces as Measured by the James Machine
ASTM E648	(2014c) Standard Test Method for Critical Radiant Flux of Floor-Covering Systems Using a Radiant Heat Energy Source

U.S. NATIONAL ARCHIVES AND RECORDS ADMINISTRATION (NARA)

36 CFR 1191	Americans with Disabilities Act (ADA) Accessibility Guidelines for Buildings and Facilities; Architectural Barriers Act (ABA) Accessibility Guidelines
40 CFR 247	Comprehensive Procurement Guideline for Products Containing Recovered Materials

1.2 SUSTAINABILITY REPORTING

Materials in this technical specification may contribute towards contract compliance with sustainability requirements.

1.2.1 Sustainability Requirements

See Section 01 33 29 SUSTAINABILITY REQUIREMENTS for project local/regional materials, recycled content,low emitting materials, and rapidly renewable materials requirements.

1.2.2 EPA Comprehensive Procurement Guidelines

See Section 01 33 29 SUSTAINABILITY REPORTING for requirements associated with EPA designated products.

1.3 SUBMITTALS

Government approval is required for submittals with a "G" designation; submittals not having a "G" designation are for Contractor Quality Control approval. Submittals with an "S" are for inclusion in the Sustainability Notebook, in conformance to Section 01 33 29 SUSTAINABILITY REPORTING. Submit the following in accordance with Section 01 33 00 SUBMITTAL PROCEDURES:

SD-02 Shop Drawings

Installation Drawings; G

Detail Drawings; G

Custom Graphics Drawings; G

SD-03 Product Data

Submit Manufacturer's Data and indicate percentage of recycled material content in protective flooring materials Entrance Floor Mats and Frames to verify affirmative procurement compliance; S

Submit total weight and volume quantities of protective flooring materials with recycle materials content; S

SD-04 Samples

Submit Manufacturer's Standard Color Chart for Entrance Floor Matsand Frames showing the manufacturer's recommended color and finish selections; G

Submit one sample 12 inch square, assembled sections of floor mat to show corners, intersections, and other details of construction. Provide any graphics in drawing for approval; G

SD-08 Manufacturer's Instructions

manufacturer's instructions. ; GSD-10 Operation and Maintenance Data

Protection, Maintenance, and Repair Information; G

1.4 QUALITY ASSURANCE

Comply with 36 CFR 1191 Americans with Disabilities Act (ADA) Accessibility Guidelines for Buildings and Facilities; Architectural Barriers Act (ABA) Accessibility Guidelines for installed entrance floor mats and frames. Ensure entrance floor mats and frames are slip resistant in accordance with ASTM D2047, Coefficient of Friction, minimum 0.60 for accessible routes and be structurally capable of withstanding a Uniform floor load of 300 lbf/sq. ft.wheel load of 350 lb./wheel. Ensure flammability is in accordance with ASTM E648, Class 1, Critical Radiant Flux, minimum 0.45 watts/m2.

1.5 DELIVERY OF MATERIALS

Deliver materials to the project site in their original packages or containers bearing labels clearly identifying the manufacturer, brand name, and quality or grade.

Store materials in their original unbroken packages or containers in the area in which they will be installed. Unwrap, inspect, and place mats at indicated location. Remove all excess packing materials.

coordinate with concrete ground floor slab to provide depressed concrete area where indicated on drawings and as required by entrance floor mat and frame manufacturer. Defer installation of floor mats/grids until time of substantial completion of project.

PART 2 PRODUCTS

2.1 AFFIRMATIVE PROCUREMENT

The Environmental Protection Agency (EPA) has designated certain items which must contain a specified percent range of recovered or recycled materials. EPA designated products specified in this contract comply with the stated policy and with the EPA guidelines. Make all reasonable efforts to use recycled and recovered materials in providing the EPA designated products and in otherwise utilizing recycled and recovered materials in the execution of the work. These items, when incorporated into the work under this contract, are to contain at least the specified percentage of recycled or recovered materials unless adequate justification (non-availability) for non-use is provided, per 40 CFR 247.

Mats are listed in the EPA's Comprehensive Procurement Guidelines (CPG) at http://www.epa.gov/epaoswer/non-hw/procure/products/mats.htm.

EPA's recommended Recovered Materials Content Levels for Mats.

Product	Material	Percent Of Post Consumer Materials	Percent Of Total Recovered Materials
Mats	Rubber	75 - 100	85 - 100
	Plastic	10 - 100	100
	Rubber/ Plastic composite	100	100

The recommended recovered materials content levels are based on the dry weight of the raw materials, exclusive of any additives such as adhesives, binders, or coloring agents. EPA's recommendation does not preclude procuring agencies from purchasing mats manufactured from another material. It simply recommends that procuring agencies, when purchasing mats made from rubber or plastic, purchase these items made from recovered materials.

For informational purposes, a list of known sources for mats using recycled material is provided in the EPA/CPG Supplier database at http://www.ergweb2.com/cpg4review/user/cpg_search.cfm.

Note that the Contractor is not limited to these sources. A product meeting CPG recycle requirements from other sources may be submitted for the Government's approval.

Submit recycled material content data for protective flooring materials indicating compliance with affirmative procurement.

Submit total weight and volume quantities of protective flooring materials with recycle material.

2.2 TYPE OF MATS

2.2.1 Entrance Floor Mats and Frames

Furnish the following type of entrance floor mat and frame:

a. Basis of design is G4 PediTred, manufactured by Construction Specialties, Inc., however, equivalant products by other manufactures

that meet the quality and performance are acceptable upon review and approval by the Designer and Architect of Record.

b. See drawings for sizes and locations. Coordinate depressed concrete area with ground floor slab construction and requirements of the entrance floor mat and frame manufacturer.

c. System Description: Must be extruded 6105-T5 aluminum alloy with 3/4" deep tread rails joined by an EPDM hinge and cushion to compromise the overall grid length (traffic direction). The hinge shall be complete with perforations between each tread rail for drainage, unless otherwise specified. Rail finish to be anodized aluminum. Unit must withstand 1000 lb. wheel loads (load applied to a 5″ x 2″ wide polyurethane wheel, 1000 passes without damage).

d. Grid Frame: Tapered Angle Frame shall be a 3/4 inch deep recessed frame in 6063-T5 aluminum alloy. Frame color shall be supplied in anodized aluminum finish.

e. Tread Inserts: HD – MonoTuft HD™ Carpet shall meet CRI standard for indoor air quality. Fibers shall include a minimum of 100, 12 mil monofilament fibers per square inch. Each carpet fiber and monofilament shall be fusion-bonded to a rigid two-ply backing to prevent fraying and supplied in continuous splice-free lengths. Anti-static carpet fibers shall contain antimicrobial additive and be treated with Scotchgard® to reduce soiling. Carpet weight shall be 33-oz./yd². Provide Manufacturer's Standard Color Chart with actual finish samples for color selection, and assembled sections of floor mat to NAVFAC Interior Designer.

PART 3 EXECUTION

3.1 EXAMINATION

Comply with manufacturer's requirements of substrates and floor conditions affecting installation of floor mats and frames. Installation cannot occur until unsatisfactory conditions have been corrected.

3.2 INSTALLATION

Contractor must check actual openings for mats/grids and provide accurate field measurements to manufacturer before fabrication. Record actual measurements on final shop drawings. Coordinate fabrication schedule with construction progress to avoid delay of work.

For proper installation, the recessed area to receive mats/grids must be flat and smooth throughout. Concrete pour dimensions may require leveling grout to achieve the proper depth and a smooth finish. The final recess depth will match the specified product of 3/4 inch and must be field verified. For proper frame installation, the side walls of the concrete recess must also be straight and smooth. Inconsistencies with the recess and side walls must be remediated prior to product installation.

Install floor mats and frames according to manufacturer's instructions. Set mat tops at height recommended by manufacturer for most effective cleaning action. Coordinate top of mat surfaces with bottom of doors that swing across mats to provide clearance between door and mat. Coordinate recess frame installation with concrete construction to ensure frame anchorage is correct and that the base is level and flat. Install grout

and fill around frames and, if required to set mat tops at proper elevations, in recesses under mats. Finish grout and fill smooth and level.

Submit detail drawings, and custom graphics drawings as required. Provide installation drawings. Provide manufacturer's protection, maintenance, and repair information.

-- End of Section --

THIS PAGE HAS BEEN INTENTIONALLY LEFT BLANK

SECTION 12 93 00

SITE FURNISHINGS
08/17

PART 1 GENERAL

1.1 REFERENCES

The publications listed below form a part of this specification to the extent referenced. The publications are referred to within the text by the basic designation only.

ALUMINUM ASSOCIATION (AA)

AA DAF45	(2003; Reaffirmed 2009) Designation System for Aluminum Finishes

AMERICAN ARCHITECTURAL MANUFACTURERS ASSOCIATION (AAMA)

AAMA 611	(2014) Voluntary Specification for Anodized Architectural Aluminum

AMERICAN FOREST FOUNDATION (AFF)

ATFS STANDARDS	(2015) American Tree Farm System Standards of Sustainability 2015-2020

AMERICAN INSTITUTE OF STEEL CONSTRUCTION (AISC)

AISC 303	(2016) Code of Standard Practice for Steel Buildings and Bridges
AISC 360	(2016) Specification for Structural Steel Buildings

AMERICAN INSTITUTE OF TIMBER CONSTRUCTION (AITC)

ANSI/AITC A190.1	(2007) American National Standard, Structural Glued Laminated Timber

AMERICAN SOCIETY OF MECHANICAL ENGINEERS (ASME)

ASME B18.2.1	(2012; Errata 2013) Square and Hex Bolts and Screws (Inch Series)
ASME B18.2.2	(2015) Nuts for General Applications: Machine Screw Nuts, Hex, Square, Hex Flange, and Coupling Nuts (Inch Series)
ASME B18.6.2	(1998; R 2010) Slotted Head Cap Screws, Square Head Set Screws, and Slotted Headless Set Screws: Inch Series
ASME B18.6.3	(2013; R 2017) Machine Screws, Tapping Screws, and Machine Drive Screws (Inch Series)

ASME B18.21.1	(2009; R 2016) Washers: Helical Spring-Lock, Tooth Lock, and Plain Washers (Inch Series)

AMERICAN SOCIETY OF SAFETY PROFESSIONALS (ASSP)

ASSP A10.3	(2013) Safety Requirements for Powder-Actuated Fastening Systems American National Standard for Construction and Demolition Operations

AMERICAN WELDING SOCIETY (AWS)

AWS D1.1/D1.1M	(2015; Errata 1 2015; Errata 2 2016) Structural Welding Code - Steel

ASTM INTERNATIONAL (ASTM)

ASTM A36/A36M	(2014) Standard Specification for Carbon Structural Steel
ASTM A47/A47M	(1999; R 2018; E 2018) Standard Specification for Ferritic Malleable Iron Castings
ASTM A48/A48M	(2003; R 2012) Standard Specification for Gray Iron Castings
ASTM A53/A53M	(2018) Standard Specification for Pipe, Steel, Black and Hot-Dipped, Zinc-Coated, Welded and Seamless
ASTM A123/A123M	(2017) Standard Specification for Zinc (Hot-Dip Galvanized) Coatings on Iron and Steel Products
ASTM A153/A153M	(2016) Standard Specification for Zinc Coating (Hot-Dip) on Iron and Steel Hardware
ASTM A307	(2014; E 2017) Standard Specification for Carbon Steel Bolts, Studs, and Threaded Rod 60 000 PSI Tensile Strength
ASTM A500/A500M	(2018) Standard Specification for Cold-Formed Welded and Seamless Carbon Steel Structural Tubing in Rounds and Shapes
ASTM A501/A501M	(2014) Standard Specification for Hot-Formed Welded and Seamless Carbon Steel Structural Tubing
ASTM A615/A615M	(2016) Standard Specification for Deformed and Plain Carbon-Steel Bars for Concrete Reinforcement
ASTM A653/A653M	(2019) Standard Specification for Steel

	Sheet, Zinc-Coated (Galvanized) or Zinc-Iron Alloy-Coated (Galvannealed) by the Hot-Dip Process
ASTM A780/A780M	(2009; R 2015) Standard Practice for Repair of Damaged and Uncoated Areas of Hot-Dip Galvanized Coatings
ASTM A1064/A1064M	(2017) Standard Specification for Carbon-Steel Wire and Welded Wire Reinforcement, Plain and Deformed, for Concrete
ASTM B26/B26M	(2014; E 2015) Standard Specification for Aluminum-Alloy Sand Castings
ASTM B62	(2017) Standard Specification for Composition Bronze or Ounce Metal Castings
ASTM B108/B108M	(2019) Standard Specification for Aluminum-Alloy Permanent Mold Castings
ASTM B209	(2014) Standard Specification for Aluminum and Aluminum-Alloy Sheet and Plate
ASTM B221	(2014) Standard Specification for Aluminum and Aluminum-Alloy Extruded Bars, Rods, Wire, Profiles, and Tubes
ASTM B429/B429M	(2010; E 2012) Standard Specification for Aluminum-Alloy Extruded Structural Pipe and Tube
ASTM C33/C33M	(2018) Standard Specification for Concrete Aggregates
ASTM C94/C94M	(2018) Standard Specification for Ready-Mixed Concrete
ASTM C150/C150M	(2018) Standard Specification for Portland Cement
ASTM C260/C260M	(2010a; R 2016) Standard Specification for Air-Entraining Admixtures for Concrete
ASTM C979/C979M	(2016) Standard Specification for Pigments for Integrally Colored Concrete
ASTM D1187/D1187M	(1997; E 2011; R 2011) Asphalt-Base Emulsions for Use as Protective Coatings for Metal
ASTM D3451	(2006; R 2017) Standard Guide for Testing Coating Powders and Powder Coatings
ASTM D4060	(2019) Abrasion Resistance of Organic Coatings by the Taber Abraser
ASTM E488/E488M	(2015) Standard Test Methods for Strength

of Anchors in Concrete and Masonry Elements

ASTM F1487 (2017) Standard Consumer Safety Performance Specification for Playground Equipment for Public Use

CSA GROUP (CSA)

CSA Z809-08 (R2013) Sustainable Forest Management

FOREST STEWARDSHIP COUNCIL (FSC)

FSC STD 01 001 (2015) Principles and Criteria for Forest Stewardship

PRECAST/PRESTRESSED CONCRETE INSTITUTE (PCI)

PCI MNL-128 (2001) Recommended Practice for Glass Fiber Reinforced Concrete Panels, 4th Edition

PROGRAMME FOR ENDORSEMENT OF FOREST CERTIFICATION (PEFC)

PEFC ST 2002:2013 (2015) PEFC International Standard Chain of Custody of Forest Based Products Requirements

SOCIETY FOR PROTECTIVE COATINGS (SSPC)

SSPC Paint 25 (1997; E 2004) Zinc Oxide, Alkyd, Linseed Oil Primer for Use Over Hand Cleaned Steel, Type I and Type II

SUSTAINABLE FOREST INITIATIVE (SFI)

SFI 2015-2019 (2015) Standards, Rules for Label Use, Procedures and Guidance

U.S. GENERAL SERVICES ADMINISTRATION (GSA)

CID A-A-1925 (Rev A; Notice 3) Shield Expansion (Nail Anchors)

1.2 SUBMITTALS

Government approval is required for submittals with a "G" designation; submittals not having a "G" designation are for [Contractor Quality Control approval.] [information only. When used, a designation following the "G" designation identifies the office that will review the submittal for the Government.] Submittals with an "S" are for inclusion in the Sustainability eNotebook, in conformance to Section 01 33 29 SUSTAINABILITY REPORTING. Submit the following in accordance with Section 01 33 00 SUBMITTAL PROCEDURES:

SD-02 Shop Drawings

Benches and Chairs; G

Tables; G

Shelters; G

Bicycle Racks; G

Planters; G

Bollards; G

Tree Grates; G

Assembly Instruction Drawings

SD-03 Product Data

Benches and Chairs

Tables

Shelters

Bicycle Racks

Planters

Bollards

Tree Grates

Recycled Content for steel components; S

Recycled Content for aluminum components; S

Recycled Content for HDPE components; S

Waste Receptacles

SD-04 Samples

Finish; G

SD-06 Test Reports

Testing

SD-07 Certificates

Primer Certificate

Powder Coatings Certificate

[Certified Sustainably Harvested lumber; S]

[Certified Sustainably Harvested wood for wood seats and table tops; S]

[Certified Sustainably Harvested wood for wood benches and chairs; S]

[Certified Sustainably Harvested wood for wood containers; S]

[Certified Sustainably Harvested wood for wood shelters; S]

[Certified Sustainably Harvested wood for wood tables; S]

1.3 CERTIFICATIONS

1.3.1 Certified Sustainably Harvested Wood

Provide wood certified as sustainably harvested by FSC STD 01 001[, ATFS STANDARDS, CSA Z809-08, SFI 2015-2019, or other third party program certified by PEFC ST 2002:2013]. Provide a letter of Certification of Sustainably Harvested Wood signed by the wood supplier. Identify certifying organization and their third party program name and indicate compliance with chain-of-custody program requirements. Submit sustainable wood certification data; identify each certified product on a line item basis. Provide current product certification documentation from certification body. Submit copies of invoices bearing certification numbers.

1.4 QUALITY ASSURANCE

Qualify welders in accordance with AWS D1.1/D1.1M using procedures, materials, and equipment of the type required for the work.

1.4.1 Fabrication Drawings

Submit fabrication drawings showing layout(s), connections to structural system, and anchoring details as specified in AISC 303.

1.4.2 Installation Drawings

Submit templates, erection and installation drawings indicating thickness, type, grade, class of metal, and dimensions. Show construction details, reinforcement, anchorage, and installation.

1.4.3 Assembly Instruction Drawings

Submit assembly instruction drawings showing layout(s), connections, bolting and anchoring details in accordance with manufacturer's standards. Submit drawings showing scaled details of proposed site furnishings, elevations for each type of site furnishing; dimensions, details, and methods of mounting or anchoring; shape and thickness of materials; and details of construction.

1.4.4 Primer Certificate

Submit a certificate from the manufacturer stating that the primer conforms to requirements of SSPC Paint 25.

1.4.5 Powder Coatings Certificate

Submit a certificate from the manufacturer stating that the powder coat conforms to ASTM D3451.

1.5 DELIVERY, STORAGE, AND HANDLING

Ship items knocked-down (KD) ready for site assembly. Packaged components must be complete including all accessories and hardware. Materials must be delivered, handled, and stored in accordance with the manufacturer's recommendations. Site furnishings must be inspected upon arrival at the job site for conformity to specifications and quality in accordance with paragraph MATERIALS. Protect from corrosion, staining, and other types of damage. Store items in designated area free from contact with soil and weather. Remove and replace damaged items with new items.

PART 2 PRODUCTS

2.1 MATERIALS

Provide materials which are the standard products of a manufacturer regularly engaged in the manufacture of such products. The materials provided shall be of a type with proven satisfactory usage for at least 2 years.

2.1.1 Metals

Metallic materials and products must conform to Section 08 31 00 ACCESS DOORS AND PANELS. Furnish metal components with factory drilled holes and free of excess weld and spatter. Metal components with holes that will not be filled by hardware or hidden by other components will be rejected. Structural steel products must conform to ASTM A36/A36M, ASTM A500/A500M and ASTM A501/A501M. Provide Steel Components with a minimum of 70 percent recycled content. Provide data identifying percentage of recycled content for steel components.

2.1.2 Structural Tubing

ASTM A500/A500M

2.1.3 Steel Pipe and Fittings

Steel pipe must conform to ASTM A53/A53M, Type E or S, Grade B; standard malleable iron fittings must conform to ASTM A47/A47M.

2.1.4 Aluminum Products

Provide Aluminum Components with a minimum of 50 percent total recycled content. Provide data identifying percentage of recycled content for aluminum components

2.1.5 Cast Aluminum

Cast aluminum must conform to ASTM B26/B26M and ASTM B108/B108M. Provide castings manufactured true to pattern and component parts that fit together in a satisfactory manner. Provide castings of uniform quality, free from blowholes, porosity, hard spots, shrinkage, distortion, or other defects. Smooth castings must be well-cleaned by sand or shot blasting.

2.1.6 Aluminum Alloy Products

Conform to ASTM B209 for sheet plate, ASTM B221 for extrusions and ASTM B26/B26M or ASTM B108/B108M for castings, as applicable. Provide

aluminum extrusions at least 1/8 inch thick and aluminum plate or sheet at least 0.050 inch thick.

2.1.7 Anchors and Hardware

Provide anchors, where necessary, for fastening site furnishings securely in place and in accordance with approved manufacturer's instructions. Anchoring devices that may be used, when no anchors are otherwise specified or indicated, include anchor bolts, slotted inserts, expansion shields for concrete; toggle bolts and through bolts for masonry; machine carriage bolts for steel; and lag bolts and screws for wood. Anchor bolts must conform to ASTM A307. Hardware must be [stainless steel] [brass] [zinc-plated][zinc-chromate plated] [or] [galvanized steel] in accordance with ASTM A153/A153M and compatible with the material to which applied. All exposed hardware must match in color and finish. Mounting hardware must be concealed, recessed, and plugged.

2.1.7.1 Threaded Inserts and Expansion Anchors

Provide inserts recessed not less than [2.5] [_____] inches into concrete or masonry. Pullout [198] [_____] pounds in concrete with f'c of 3,000 psi, as tested in accordance with ASTM E488/E488M. Expansion shields must conform to CID A-A-1925, group II, type 4, class 1. Provide embedment required by manufacturer.

2.1.7.2 Lag Screws and Bolts

ASME B18.2.1, type and grade best suited for the purpose.

2.1.7.3 Toggle Bolts

ASME B18.2.1.

2.1.7.4 Bolts, Nuts, Studs and Rivets

ASME B18.2.2 or ASTM A307.

2.1.7.5 Power Driven Fasteners

Follow safety provisions of ASSP A10.3.

2.1.7.6 Screws

ASME B18.2.1, ASME B18.6.2, and ASME B18.6.3.

2.1.7.7 Washers

Provide plain washers to conform to ASME B18.21.1. Provide beveled washers for American Standard beams and channels, square or rectangular, tapered in thickness, and smooth. Provide lock washers to conform to ASME B18.21.1.

2.1.8 Ounce Metals

Bronze, copper, and other ounce metals must conform to ASTM B62.

2.1.9 Concrete

Ready-mixed concrete must conform to ASTM C94/C94M, using 3/4 inch maximum

size aggregate, and having minimum compressive strength of 3000 psi at 28 days. Portland cement must conform to ASTM C150/C150M. Cast-in-place concrete materials and products must conform to Section 03 30 00 CAST-IN-PLACE CONCRETE. Precast concrete material and products must conform to Section 03 45 33 PRECAST[PRESTRESSED] STRUCTURAL CONCRETE. Reinforcing steel must conform to ASTM A615/A615M. Welded wire fabric must conform to ASTM A1064/A1064M.

2.1.10 Masonry

Masonry material and products must conform to Section 04 20 00 UNIT MASONRY

2.2 PRETREATMENT, PRIMING AND PAINTING

Apply pretreatment, primer, and paint in accordance with manufacturer's printed instructions. [On surfaces concealed in the finished construction or not accessible for finish painting, apply an additional prime coat to a minimum dry film thickness of 1.0 mil. Tint additional prime coat with a small amount of tinting pigment.]

2.2.1 Nonferrous Metal Surfaces

Protect by plating, anodic, or organic coatings.

2.2.2 Aluminum Surfaces

Before finishes are applied, remove roll marks, scratches, rolled-in scratches, kinks, stains, pits, orange peel, die marks, structural streaks, and other defects which will affect uniform appearance of finished surfaces.

2.3 COATINGS AND FINISHES

2.3.1 Galvanizing

Hot-dip galvanize items specified to be zinc-coated, after fabrication where practicable. Galvanizing must conform to ASTM A123/A123M, ASTM A153/A153M or ASTM A653/A653M, as applicable. Tailings and sharp protrusions formed as a result of the hot-dip process must be removed and exposed edges burnished. Galvanize anchor bolts, grating fasteners, washers and parts or devices necessary for proper installation, unless otherwise indicated.

2.3.2 Polyester Powder

Powder-coated surfaces must receive electrostatic zinc coating prior to painting. Powder coating must be electrostatically applied and oven cured. Polyester powder coating must be resistant to ultraviolet (UV) light.

2.3.3 Polyvinyl-Chloride (PVC)

PVC coating must be primed with a clear acrylic thermosetting solution. The primed parts must be preheated prior to dipping. The liquid polyvinyl chloride must be ultraviolet (UV) stabilized and mold-resistant. The coated parts must be cured. The coating must be a minimum 2/25 inches thick plus or minus 0.020 inches and must have an 85 durometer hardness with a slip-resistant finish.

2.3.4 Finish

Finish must be as specified by the manufacturer or as indicated. Exposed surfaces and edges must be rounded, polished, or sanded. Finish must be non-toxic, non-glare, and resistant to corrosion. Exposed surfaces must be smooth and splinter-free exposed surfaces. Submit [two] [_____] sets of color data for each furnishing displaying manufacturer's color selections and finishes, and identifying those colors and finishes proposed for use.

2.3.4.1 Wood Sealants

Exposed wood surfaces must have, as a minimum, two shop coats of paint, varnish, sealer, or other approved preservative. Sealants must seal all applied surfaces from air.

2.3.4.2 Paint

Paint must be factory applied with a minimum of 2 coats. Paint must be weather-resistant and resistant to cracking, peeling and fading.

2.3.4.3 Color

Color of site furnishing components must be in accordance with Section 09 06 00 SCHEDULES FOR FINISHES.

2.4 SITE STANDARDS

Site furnishings must be furnished with the dimensions and requirements indicated. Site furnishings placed in children's outdoor play areas must meet the safety requirements of ASTM F1487 for entrapment; sharp points, edges, and protrusions; entanglement; pinch, crush, and shear points. Site furnishings to be included in children's outdoor play areas must be free from sharp vertical edges and any protruding elements and designed with a minimum radius of 1/2 inch on all vertical edges; this includes, but is not limited to, seat walls, containment curbs and planters. Where practical, horizontal edges exposed to children's activities must be rounded.

2.5 BENCHES AND CHAIRS

Furnish benches and chairs with no sharp edges or protruding hardware.

a. Height: The height above finished grade or specified surface must be between 18-20 inches and level.

b. Seat: The seat surface must be pitched or slotted to shed water; the seat depth must be between 12-18 inches and pitched down at the back at a 0-5 degree angle. Seat must have a minimum width of 24 inches per person, and must overhang the support base by a minimum of 4 inches for heel space and to facilitate rising from a seating position.

c. Back Rest: When back rests are required, the height must be between 15-18 inches from the top of the seat and the connection must be at a 90-110 degree angle to the seat.

d. Arm Rest: When arm rests are required, a minimum of 6 inches height from the seat and a minimum arm rest width of 1-1/2 inches must be provided.

e. Weight Limit: Seats must support a minimum 300 lbs for each person they are designed to accommodate.

[2.5.1 Precast Units

Design precast units in accordance with manufacturer's standards, size as indicated. Finish and color as indicated selected from manufacturer's standards.

[2.5.1.1 Glass Fiber Reinforced Concrete (GFRC) Units

Provide glass fiber reinforced concrete (GFRC) units at locations indicated on the drawings. Comply with PCI MNL-128 recommended practice for glass fiber reinforced concrete, including Appendix G, Polymer Modified Glass Fiber Reinforced Concrete Panels.

a. Design precast benches to sustain a live load of not less than 200 pounds per square foot.

b. Provide ASTM C150/C150M cement, use only one brand and type of cement throughout project.

c. Provide alkali resistant (AR) glass fibers produced specifically for use in glass fiber reinforced concrete, minimum three percent glass fiber content.

d. Provide clear silica sand aggregate passing No. 16 sieve; washed, dried and free from deleterious materials. Provide type with successful history of uses in GFRC fabrication standard with the manufacturer.

e. Provide 3000 psi concrete, 28 day minimum compressive strength with approximately 120 pcf density; shell thickness of 3/8 to 5/8 inch.

f. Provide manufacturer's standard acrylic thermoplastic copolymer admixture.

g. Provide factory finished units standard with the manufacturer; texture and color as selected.

(1) Provide white or grey cement consistent with final finish.

(2) Provide ASTM C33/C33M (less gradation) facing aggregates, clean, hard, durable, inert and free of staining and deleterious materials; as required to match approved samples.

(3) Provide color meeting ASTM C979/C979M, pure, non-fading mineral oxides, maximum ten percent cement weight; as required to match approved samples without impairing strength of GFRC.

(4) Apply finish meeting ASTM D4060 waterborne crosslinked acrylic 49.5 +/- two percent solids by weight providing 1000 cycles per 0.001 inch resistance to abrasion.

h. Prefabricate units within following maximum fabrication tolerances.

(1) Dimension: Plus or minus 1/8 inch in any direction, noncumulative.

(2) Material Thickness: Plus 1/4 inch and minus 0-inch.

(3) Total Unit Thickness: Plus 1/4 inch and minus 1/8 inch.

(4) Insert Locations: Plus or minus 1/4 inch.

][2.5.1.2 Precast Concrete/Cast Stone Units

Provide reinforced precast concrete units consisting of a mixture of cement, aggregates and mineral colors suitable for exterior use, located as indicated. Design benches to sustain a live load of not less than 200 pounds per square foot.

2.5.1.2.1 Portland Cement

ASTM C150/C150M Type I II or III

2.5.1.2.2 Aggregate

ASTM C33/C33M, maximum size 3/4 inch

2.5.1.2.3 Reinforcing Steel

ASTM A615/A615M

2.5.1.2.4 Galvanized Wire Mesh

ASTM A1064/A1064M

2.5.1.2.5 Integral Color

ASTM C979/C979M, pure mineral oxide, limeproof and non-fading

2.5.1.2.6 Concrete Strength

Provide minimum 5000 psi 28 day compressive strength concrete, maximum five percent absorption.

2.5.1.2.7 Admixture

ASTM C260/C260M for air-entraining

]][2.5.2 Wood Units

Provide manufacturer's standard wood units with wood, metal, fiberglass or concrete pedestals as indicated. Provide fasteners and accessories required for onsite assembly. Kiln dry and pressure treat wood components to manufacturer's standards. Pre-treat metal components and provide manufacturer's standard primer and powder coat finish complying with ASTM D3451, color as selected. Provide fiberglass non-fading gel coat color as indicated. Provide manufacturer's standard exposed aggregate or sandblasted finish and protection coating on concrete pedestals.

[Provide certified sustainably harvested wood for wood benches and chairs.]

a. Design wood benches to sustain a live load of not less than 200 pounds per square foot.

b. Provide kiln dried, surfaced four sides (S4S), clear all sides wood slats of species and sizes indicated.

(1) Species: [Teakwood] [Marine Teak] [Clear All Heart Redwood] [Red Cedar] [Alaska Yellow Cedar] [Clear Douglas Fir] [Ipe] [Mahogany] [Purple Heart].

(2) Nominal wood slat sizes: 1 by 2-1/2 inch [1 by 3 inch] [2 by 3 inch] [2 by 4 inch]. Top and bottom rail may be larger in size and configuration for comfort of seating.

2.5.2.1 Support Pedestals

Provide [cast iron] [cast aluminum] [steel] [wood] [concrete] [fiberglass] support pedestals in accordance with manufacturer's standard.

2.5.2.1.1 Cast Grey Iron

ASTM A48/A48M Class 30 or recycled cast grey iron ASTM A48/A48M Class 25

2.5.2.1.2 Cast Aluminum

ASTM B26/B26M or ASTM B108/B108M as applicable

2.5.2.1.3 Steel

ASTM A653/A653M

2.5.2.1.4 Wood

Match in species, grade, grain, color and finish of the wood slats.

2.5.2.1.5 Concrete

Concrete must be of the same quality and finish as specified for precast concrete.

2.5.2.1.6 Fiberglass

Design fiberglass pedestals to support the loads imposed in design of bench. Color as approved.

[2.5.2.2 Steel Arms

Provide 3/8 inch thick by 3 inch wide steel bench arms conforming to ASTM A653/A653M.

]][2.5.3 Fiberglass Benches

Provide reinforced fiberglass benches molded with multiple laminations of glass fiber impregnated with polyester isophthalic thermosetting resins, minimum thickness of 1/8 inch and reinforced in accordance with manufacturer's standard practice.

a. Design bench to sustain a live load of not less than 200 pounds per square foot.

b. Provide manufacturer's finish, 12-15 mil color impregnated polyester gel coat, of color as selected from manufacturer's standard colors and

finishes, [smooth matte] [orange peel] [polished granite].

]2.5.4 Steel Units

[2.5.4.1 Perforated Steel

Provide [14 gage] [16 gage] perforated steel sheet, electrostatically coated with two component polyester enamel.

a. Design bench to sustain a live load of not less than 200 pounds per square foot.

[b. Provide 3/8 inch thick by 4 inch wide hot rolled steel pedestals conforming to ASTM A653/A653M.]

[c. Provide 1-1/2 inch O.D. ASTM A53/A53M schedule 40 steel pipe pedestals.]

][2.5.4.2 All-Welded Wire

Provide all-welded wire construction of 9 gage, 11 gage wire with 1/2 inch clear spacing and 5/16 inch wire with 2 1/2 inch spacing.

a. Design benches to sustain a live load of not less than 200 pounds per square foot.

b. Provide one inch O.D. by 18 gage [1-1/2 inch O.D. by 16 gage] galvanized tubing for bench frames.

[c. Provide 1-1/2 inch O.D. by 11 gage galvanized tubing for armrest.]

d. Provide cadmium or zinc plated hardware; nuts, bolts, screws, and lock washers with a clean chromate finish.

]2.5.5 Aluminum Units

[AA DAF45] [AAMA 611]. Provide [extruded] [formed] aluminum benches in accordance with manufacturers standard, with [dark] [medium] [light] bronze [clear anodized] [black anodized] [acrylic paint] [powder coat] finish, color as selected from manufacturer's standards.

a. Design benches to sustain a live load of not less than 200 pounds per square foot.

b. Provide manufacturer's standard [cast grey iron] [cast aluminum] [steel] [precast concrete] [fiberglass] pedestals.

2.5.6 Accessories

Provide manufacturer's standard materials and accessories as required for assembly of units and as indicated on the assembly drawings. Provide unexposed aluminum, stainless steel or steel plates, angles and supports as required for complete assembly. Separate dissimilar materials to prevent electrolytic action.

2.5.7 Fasteners

Provide concealed fasteners except where specifically approved; types as required for specific usage.

2.5.8 Anchoring Brackets

Provide 1/4 inch zinc plated steel angle anchoring brackets, 1-7/8 inch wide by 2 inches deep by 2-1/2 inches high [1-7/8 inch wide by 3-1/2 inch deep by 6 inch high], pre-drilled for bolting benches to substrate.

2.6 BICYCLE RACKS

Design bicycle racks (stanchions) in accordance with manufacturer's standards and to meet design conditions indicated. Locate as shown on the drawings. Provide powder coat finish in color as selected from manufacturer's standards. Racks must accommodate locking devices and secure, as a minimum, one wheel and part of the frame simultaneously. The spacing between racks must be a minimum of 24 inches.

[2.6.1 Metal Pipe Bicycle Racks

Provide ASTM A53/A53M schedule 40 steel pipe bicycle racks in configuration and of [4-1/2] [_____] inch pipe size. Type of mounting, bicycle rack capacity and height above the ground as shown on the drawings.

][2.6.2 Precast Concrete Bicycle Rack

Provide one-piece precast concrete bicycle rack base with embedded galvanized metal hitching loops. Design bicycle rack with wheel notches for bike support and wheel locking device.

]2.7 BOLLARDS

Provide reinforced concrete bollards [12] [18] inch [square] [round], height as indicated, suitable for ground mount installation. Provide exposed aggregate or sandblast finish as indicated; manufacturer's standard clear acrylic sealer. Submit manufacturer's descriptive data and catalog cuts.

2.7.1 Portland Cement

ASTM C150/C150M Type I II or III

2.7.2 Aggregate

ASTM C33/C33M, maximum size 3/4 inch

2.7.3 Reinforcing Steel

ASTM A615/A615M

2.7.4 Integral Color

ASTM C979/C979M, pure mineral oxide, limeproof and non-fading

2.7.5 Concrete Strength

5000 psi, 28 day minimum compressive strength

2.7.6 Admixture

ASTM C260/C260M for air-entraining

2.8 WASTE AND ASH RECEPTACLES

[Provide for waste receptacles [spun aluminum] [reinforced fiberglass] [flat] [domed] tops and removable semi-rigid plastic liner insert.] [Provide top-mounted ash trays for ash receptacles.] Waste receptacles must be furnished with weather protection, odor containment, and insect/animal-proofing. Container size must be [as directed] [_____].

2.8.1 Height

Trash and litter deposit openings must be between 30-40 inches above the ground.

2.8.2 Liners

Trash and litter receptacles must be furnished with [disposable inner-linings] [removable/reusable inner containers]. Self-dumping type designs to include hinged bottom, top or sides will be rejected.

2.8.3 Anchors

Trash and litter receptacles that can be anchored to resist overturning by typical use, high winds, or animals must be furnished and anchored in accordance with the manufacturer's recommendations.

2.8.4 Openings

Openings for trash and litter insertion must be a minimum of 4 inches in diameter. Edges of the openings must be crimped, rounded and smoothed.

2.8.5 Ash Receptacles

Provide ash receptacles with a fire-proof metal bowl or screen or sand-filled containers for ash containment. Ash receptacles must have a minimum diameter of 8 inches; ash containers must have a fire-proof metal bowl or screen and must be easily removable for cleaning.

[][][][]2.8.6 Waste Receptacle

Provide metal waste receptacles as indicated, fabricated from [perforated steel sheet material] [wire or diamond mesh steel sheet] [steel frame with steel staves welded to frame] [cast aluminum] [cast iron]; powder coat finish, color as selected.

a. Metal thickness, width, and configuration must be manufacturer's standard. Chemically clean and phosphate coat prior to final powdercoat.

b. Provide 3/16 inch thick fiberglass-reinforced polyester resin liner in black for planter liners.

2.9 SHELTERS

AISC 360. Provide prefabricated shelter systems to meet design conditions indicated. Shelter design must conform to all applicable State and Local Building Codes and must meet manufacturer's standards of construction and materials. Shelter systems must be [preglazed] pre-drilled and pre-cut, shipped with all hardware and accessories necessary for complete field

assembly.

2.9.1 Framing Systems

Framing system; columns, rafters, ridge, purlins and other structural framing members must be [aluminum] [steel] [wood] as indicated. Manufacturer must provide shop drawings and calculations prepared by a structural engineer.

[2.9.1.1 Aluminum

Extruded aluminum alloy tubing must conform to ASTM B429/B429M 6063-T5 or 3003-H14, dark [medium] [light] bronze [black] [clear anodized] [powder coat] finish. Framing sizes and configurations must be as required for size of structure indicated meeting manufacturer's standards and applicable building codes.

][2.9.1.2 Steel

Structural steel must conform to ASTM A36/A36M or ASTM A500/A500M, 36,000 psi yield strength and 58,000 psi tensile strength, factory finished with rust inhibited primer and powder coat conforming to ASTM D3451. Framing sizes and configurations must be as required for size of structure indicated meeting manufacturer's standard and applicable building codes.

][2.9.1.3 Wood

Wood framing system must consist of surfaced four sides (S4S), #2 grade southern yellow pine [_____] solid timber columns with eased edges, pressure treated against decay, fungi and insect infestation, surfaced four sides (S4S), #1 grade, southern pine, [_____] glue-laminated columns manufactured in accordance with ANSI/AITC A190.1 and AITC certified glue-laminated structural grade southern yellow pine [_____] beams, rafters and purlins, factory sealed and individually wrapped for protection during shipment. Factory stain all wood members prior to shipment.

[Provide certified sustainably harvested wood for wood shelters.]

]2.9.2 Roof Panels [Decking]

Provide manufacturer's standard [molded acrylic translucent roof panel] [standing seam metal roof panel] [wood decking] [V-beam aluminum roof panels] [FRP roof panels] [_____] roof panels as indicated. Materials must be factory finished and shipped with all necessary fasteners and accessories as required for complete site assembly.

2.9.3 Glazing

Factory installed in separate structural window frames, gasketed and glazed in accordance with manufacturer's standard, interchangeable, glazing system. Provide [1/4 inch acrylic sheet] [1/4 inch tempered glass] [1/4 inch polycarbonate plastic sheet] [1/4 inch mar-resistant polycarbonate plastic sheet], [clear] [_____] color.

2.10 TABLES

Picnic tables must be furnished with attached benches that have no backrests. Table's exposed edges and corners must be rounded, eased or

chamfered.

2.10.1 Height

Between 29-48 inches from the finished grade to the lowest surface of the top, or as noted.

2.10.2 Clearance

A minimum vertical clearance of 9 inches between the seat top and the bottom edge of the table top must be provided. A minimum of 18 inches of leg space under tables, measured from the inside edge of the seat top to the nearest table support, must be provided. A minimum of 18 inches from the end of the table top to the nearest support leg must be provided.

2.10.3 Top

Table top surfaces must not contain recesses that might hold water or food particles. The table top width must be a minimum of 18 inches when utilized from one side only, and a minimum of 36 inches when utilized from two sides. The table top length must be a minimum of 24 inches per person.

2.10.4 Wheelchair Access

A minimum clear space of 29 inches from the finished grade to the underside of the table must be provided for persons with disability to be able to pull a wheelchair beneath the table top at the end of the table; the minimum clear width must be 34 inches.

2.10.5 Precast Concrete Tables

Provide reinforced precast concrete tables with smooth tops; minimum 4500 psi concrete, 28 day minimum compressive strength, consisting of a mixture of cement, aggregates, and mineral colors suitable for exterior use as located on the drawings. Provide manufacturer's standard exposed aggregate or sandblast finish with clear acrylic coating.

a. Portland cement: ASTM C150/C150M, gray, Type I.

b. Aggregate: ASTM C33/C33M, washed No. 8 limestone and sand.

c. Galvanized wire mesh: 14 gage, 2 by 2 inch.

d. Welded wire fabric: ASTM A1064/A1064M

e. Reinforcing steel: ASTM A615/A615M

f. Integral color: ASTM C979/C979M, pure mineral oxide, limeproof and non-fading

g. Admixture: ASTM C260/C260M for air-entraining.

2.10.6 Fiberglass Tables

Provide reinforced fiberglass table tops molded with multiple laminations of glass fiber impregnated with polyester isophthalic thermosetting resins, minimum thickness of 1/4 inch with 12-15 mil thickness color impregnated polyester gel coat, color as selected.

a. Steel pedestal base: ASTM A53/A53M Schedule 40 steel pipe, [1-1/2] [1-5/8] [2-3/8] inch O.D.

b. Mounting: Type as indicated.

c. Metal finish: Powder coating conforming to ASTM D3451 testing.

2.10.7 Perforated Steel Tables

Provide 14 gage [16 gage] perforated steel sheet table tops with solid metal edges in accordance with manufacturer's standard. Weld tops to base as required for frame support.

a. Steel pedestal base: ASTM A53/A53M Schedule 40 steel pipe, 2-3/8 inch O.D.

b. Mounting: Type as indicated.

c. Hardware: Zinc or cadmium plated nuts, bolts, screws, and lock washers.

d. Metal finish: Powder coating conforming to ASTM D3451 testing.

2.10.8 [Wood Tables

Provide manufacturer's standard wood tables with wood [metal] [_____] bases as indicated. Provide fasteners and accessories required for onsite assembly. Kiln dry and pressure treat wood components to manufacturer's standard, maximum 19 percent moisture content. [Pre-treat metal components and provide manufacturer's standard primer and powder coat finish complying with ASTM D3451, color as selected].

[Provide certified sustainably harvested wood for wood tables.]

a. Design wood tables to sustain a live load of not less than 200 pounds per square foot.

b. Provide kiln dried, surfaced four sides (S4S), clear all sides wood slats of species and sizes indicated.

(1) Species: [Teakwood] [Marine Teak] [Clear All Heart Redwood] [Red Cedar] [Alaska Yellow Cedar] [Clear Douglas Fir] [Ipe] [Mahogany] [Purple Heart].

(2) Nominal wood slat sizes: 1 by 2-1/2 inch [1 by 3 inch] [2 by 3 inch] [2 by 4 inch].

c. Design bases of the materials listed below to support the loads imposed in the design of the tables.

d. Wood Support: Match in species, grade, grain, color and finish of the wood slats.

[e. Steel Support: ASTM A653/A653M].

[f. Cast Grey Iron Support: ASTM A48/A48M, Class 30 or recycled cast grey iron ASTM A48/A48M, Class 25.]

[g. Cast Aluminum Support: ASTM B26/B26M or ASTM B108/B108M as

applicable.]]

PART 3 EXECUTION

3.1 INSTALLATION

Verify that finished grades and other operations affecting mounting surfaces have been completed prior to the installation of site furnishings. Site furnishings must be installed plumb and true, at locations indicated, in accordance with the approved manufacturer's instructions.

3.1.1 Assembly and Erection of Components

New parts must be acquired from the manufacturer; substitute parts will not be accepted unless approved by the manufacturer. When the inspection of parts has been completed, the site furnishings must be assembled and anchored according to manufacturer's instructions or as indicated. When site furnishings are assembled at the site, assembly must not interfere with other operations or pedestrian and vehicular circulation.

3.1.2 Anchorage, Fastenings, and Connections

Furnish metal work, mounting bolts or hardware in ample time for securing into concrete or masonry as the work progresses. Provide anchorage where necessary for fastening furniture or furnishings securely in place. Provide, for anchorage not otherwise specified or indicated, slotted inserts, expansion shields, and power-driven fasteners, when approved for concrete; toggle bolts and through bolts for masonry; machine and carriage bolts for steel; through bolts, lag bolts, and screws for wood. Do not use wood plugs in any material. Provide non-ferrous attachments for non-ferrous metal. Make exposed fastenings of compatible materials, generally matching in color and finish the fastenings to which they are applied. Conceal fastenings where practicable.

3.2 WELDING

Perform welding, welding inspection, and corrective welding, in accordance with AWS D1.1/D1.1M. Use continuous welds on all exposed connections. Grind visible welds smooth in the finished installation.

3.3 TESTING

Test each site furnishing to ascertain a secure and correct installation. A correct installation must be according to the manufacturer's recommendations and by the following procedure: Measure the physical dimensions and clearance of each installed site furnishing for compliance with manufacturer's recommendations and as indicated. Site furnishings which do not comply must be reinstalled. Fasteners and anchors determined to be non-compliant must be replaced. Submit a written report describing the results of the testing and a report of post-installation test results.

3.4 FINISHES

3.4.1 Field Finishes

Where indicated, field finishes must be applied in accordance with Section 09 90 00 PAINTS AND COATINGS. Where dissimilar metals are in contact, protect surfaces with a coat conforming to SSPC Paint 25 to prevent

galvanic or corrosive action. Where aluminum is in contact with concrete, mortar, masonry, wood, or absorptive materials subject to wetting, protect with ASTM D1187/D1187M, asphalt-base emulsion.

3.4.2 Repair of Zinc-Coated Surfaces

Repair damaged surfaces with galvanizing repair method and paint conforming to ASTM A780/A780M or by the application of stick or thick paste material specifically designed for repair of galvanizing, as approved by the Contracting Officer. Clean areas to be repaired and remove the slag from the welds. Heat surfaces to which stick or paste material is applied, with a torch to a temperature sufficient to melt the metallics in stick or paste; spread the molten material uniformly over surfaces to be coated and wipe the excess material off.

3.5 BOLLARDS

Install in pipe sleeves embedded in concrete and filled with non-shrink grout or quick setting anchoring cement.

3.6 BICYCLE RACKS

Affix to base structure by flanges anchored to concrete or other existing masonry by expansion shields. Provide Series 300 stainless steel bolts to anchor aluminum alloy flanges, of a size appropriate to the standard product of the manufacturer. Where aluminum or alloy fittings or extrusions are to be in contact with dissimilar metals or concrete, give the contact surface a heavy coating of bituminous paint.

3.7 SMOKING SHELTER

Secure pre-fabricated shelter to reinforced concrete slab using four 1/2 inch diameter expansion bolts and shoe assemply. All fasteners and connection plates to be hot-dipped galvanized.

3.7.1 [Enter Appropriate Subpart Title Here]Columns

Provide 6 x 6 engineered lumber columns. Paint to match building architecture.

3.7.2 Roof

Provide manufacturer's standard 2 x 6 tongue and groove roof system including facia [gutter] assembly, ensuring a weather-tight seal and installation.

3.8 RESTORATION AND CLEAN UP

When the installation has been completed, clean up and protect the site. Existing areas that have been damaged from the installation operation must be restored to original condition at Contractor's expense.

3.8.1 Clean Up

The site must be cleaned of all materials associated with the installation. Site furnishing surfaces must be cleaned of dirt, stains, filings, and other blemishes occurring from shipment and installation. Cleaning methods and agents must be according to manufacturer's instructions or as indicated. Ensure excess bolt threads are cut flush and

all mounting hardware is painted to match the furnishing.

3.8.2 Protection

The area must be protected as required or directed by providing barricades and signage. Signage must be in accordance with Section 10 14 00.10 EXTERIOR SIGNAGE.

3.8.3 Disposal of Materials

Excess and waste material must be removed and disposed off Government property.

-- End of Section --

SECTION 13 34 19

METAL BUILDING SYSTEMS
11/11

PART 1 GENERAL

1.1 REFERENCES

The publications listed below form a part of this specification to the extent referenced. The publications are referred to within the text by the basic designation only.

AMERICAN INSTITUTE OF STEEL CONSTRUCTION (AISC)

AISC 325	(2011) Steel Construction Manual
AISC 341	(2016) Seismic Provisions for Structural Steel Buildings
AISC 360	(2016) Specification for Structural Steel Buildings

AMERICAN IRON AND STEEL INSTITUTE (AISI)

AISC/AISI 121	(2004) Standard Definitions for Use in the Design of Steel Structures
AISI SG03-3	(2002; Suppl 2001-2004; R 2008) Cold-Formed Steel Design Manual Set

AMERICAN SOCIETY OF CIVIL ENGINEERS (ASCE)

ASCE 7	(2010; Errata 2011; Supp 1 2013) Minimum Design Loads for Buildings and Other Structures

AMERICAN WELDING SOCIETY (AWS)

AWS A5.1/A5.1M	(2012) Specification for Carbon Steel Electrodes for Shielded Metal Arc Welding
AWS D1.1/D1.1M	(2015; Errata 1 2015; Errata 2 2016) Structural Welding Code - Steel
AWS D1.3/D1.3M	(2008; Errata 2008) Structural Welding Code - Sheet Steel

ASTM INTERNATIONAL (ASTM)

ASTM A1008/A1008M	(2015) Standard Specification for Steel, Sheet, Cold-Rolled, Carbon, Structural, High-Strength Low-Alloy and High-Strength Low-Alloy with Improved Formability, Solution Hardened, and Bake Hardened
ASTM A1011/A1011M	(2015) Standard Specification for Steel, Sheet, and Strip, Hot-Rolled, Carbon,

	Structural, High-Strength Low-Alloy and High-Strength Low-Alloy with Improved Formability and Ultra-High Strength
ASTM A123/A123M	(2017) Standard Specification for Zinc (Hot-Dip Galvanized) Coatings on Iron and Steel Products
ASTM A307	(2014; E 2017) Standard Specification for Carbon Steel Bolts, Studs, and Threaded Rod 60 000 PSI Tensile Strength
ASTM A325	(2014) Standard Specification for Structural Bolts, Steel, Heat Treated, 120/105 ksi Minimum Tensile Strength
ASTM A36/A36M	(2014) Standard Specification for Carbon Structural Steel
ASTM A463/A463M	(2010; R 2015) Standard Specification for Steel Sheet, Aluminum-Coated, by the Hot-Dip Process
ASTM A500/A500M	(2013) Standard Specification for Cold-Formed Welded and Seamless Carbon Steel Structural Tubing in Rounds and Shapes
ASTM A501/A501M	(2014) Standard Specification for Hot-Formed Welded and Seamless Carbon Steel Structural Tubing
ASTM A529/A529M	(2014) Standard Specification for High-Strength Carbon-Manganese Steel of Structural Quality
ASTM A53/A53M	(2018) Standard Specification for Pipe, Steel, Black and Hot-Dipped, Zinc-Coated, Welded and Seamless
ASTM A563	(2015) Standard Specification for Carbon and Alloy Steel Nuts
ASTM A563M	(2007; R 2013) Standard Specification for Carbon and Alloy Steel Nuts (Metric)
ASTM A572/A572M	(2015) Standard Specification for High-Strength Low-Alloy Columbium-Vanadium Structural Steel
ASTM A606/A606M	(2009a) Standard Specification for Steel Sheet and Strip, High-Strength, Low-Alloy, Hot-Rolled and Cold-Rolled, with Improved Atmospheric Corrosion Resistance
ASTM A653/A653M	(2015; E 2016) Standard Specification for Steel Sheet, Zinc-Coated (Galvanized) or Zinc-Iron Alloy-Coated (Galvannealed) by the Hot-Dip Process

ASTM A755/A755M	(2016) Standard Specification for Steel Sheet, Metallic Coated by the Hot-Dip Process and Prepainted by the Coil-Coating Process for Exterior Exposed Building Products
ASTM A780/A780M	(2009; R 2015) Standard Practice for Repair of Damaged and Uncoated Areas of Hot-Dip Galvanized Coatings
ASTM A792/A792M	(2010) Standard Specification for Steel Sheet, 55% Aluminum-Zinc Alloy-Coated by the Hot-Dip Process
ASTM A992/A992M	(2011) Standard Specification for Structural Steel Shapes
ASTM B117	(2016) Standard Practice for Operating Salt Spray (Fog) Apparatus
ASTM B209	(2014) Standard Specification for Aluminum and Aluminum-Alloy Sheet and Plate
ASTM B221	(2014) Standard Specification for Aluminum and Aluminum-Alloy Extruded Bars, Rods, Wire, Profiles, and Tubes
ASTM B221M	(2013) Standard Specification for Aluminum and Aluminum-Alloy Extruded Bars, Rods, Wire, Profiles, and Tubes (Metric)
ASTM C136/C136M	(2014) Standard Test Method for Sieve Analysis of Fine and Coarse Aggregates
ASTM C518	(2015) Steady-State Thermal Transmission Properties by Means of the Heat Flow Meter Apparatus
ASTM C920	(2014a) Standard Specification for Elastomeric Joint Sealants
ASTM D1056	(2014) Standard Specification for Flexible Cellular Materials - Sponge or Expanded Rubber
ASTM D1308	(2013) Effect of Household Chemicals on Clear and Pigmented Organic Finishes
ASTM D1667	(2005; R 2011) Flexible Cellular Materials - Poly (Vinyl Chloride) Foam (Closed-Cell)
ASTM D2244	(2015a) Calculation of Color Tolerances and Color Differences from Instrumentally Measured Color Coordinates
ASTM D2247	(2015) Testing Water Resistance of Coatings in 100% Relative Humidity

ASTM D2794	(1993; R 2010) Resistance of Organic Coatings to the Effects of Rapid Deformation (Impact)
ASTM D3363	(2005; E 2011; R 2011; E 2012) Film Hardness by Pencil Test
ASTM D4214	(2007; R 2015) Standard Test Method for Evaluating the Degree of Chalking of Exterior Paint Films
ASTM D522/D522M	(2014) Mandrel Bend Test of Attached Organic Coatings
ASTM D523	(2014) Standard Test Method for Specular Gloss
ASTM D714	(2002; R 2009) Evaluating Degree of Blistering of Paints
ASTM D822	(2001; R 2006) Filtered Open-Flame Carbon-Arc Exposures of Paint and Related Coatings
ASTM D968	(2015) Abrasion Resistance of Organic Coatings by Falling Abrasive
ASTM DEFONLINE	(2008) ASTM Online Dictionary of Engineering Science and Technology
ASTM E119	(2016) Standard Test Methods for Fire Tests of Building Construction and Materials
ASTM E136	(2016) Behavior of Materials in a Vertical Tube Furnace at 750 Degrees C
ASTM E1592	(2005; R 2012) Structural Performance of Sheet Metal Roof and Siding Systems by Uniform Static Air Pressure Difference
ASTM E1646	(1995; R 2011) Standard Test Method for Water Penetration of Exterior Metal Roof Panel Systems by Uniform Air Pressure Difference
ASTM E1680	(2016) Standard Test Method for Rate of Air Leakage Through Exterior Metal Roof Panel Systems
ASTM E283	(2004; R 2012) Determining the Rate of Air Leakage Through Exterior Windows, Curtain Walls, and Doors Under Specified Pressure Differences Across the Specimen
ASTM E331	(2000; R 2009) Water Penetration of Exterior Windows, Skylights, Doors, and Curtain Walls by Uniform Static Air Pressure Difference

ASTM E84	(2015b) Standard Test Method for Surface Burning Characteristics of Building Materials
ASTM F1554	(2015; E 2016) Standard Specification for Anchor Bolts, Steel, 36, 55, and 105-ksi Yield Strength
ASTM F1852	(2014) Standard Specification for "Twist Off" Type Tension Control Structural Bolt/Nut/Washer Assemblies, Steel, Heat Treated, 120/105 ksi Minimum Tensile Strength
ASTM F436	(2011) Hardened Steel Washers
ASTM F844	(2007a; R 2013) Washers, Steel, Plain (Flat), Unhardened for General Use
ASTM G152	(2013) Operating Open Flame Carbon Arc Light Apparatus for Exposure of Nonmetallic Materials
ASTM G153	(2013) Operating Enclosed Carbon Arc Light Apparatus for Exposure of Nonmetallic Materials

METAL BUILDING MANUFACTURERS ASSOCIATION (MBMA)

MBMA MBSM	(2002) Metal Building Systems Manual

NATIONAL ASSOCIATION OF ARCHITECTURAL METAL MANUFACTURERS (NAAMM)

NAAMM AMP 500	(2006) Metal Finishes Manual

NATIONAL ROOFING CONTRACTORS ASSOCIATION (NRCA)

NRCA RoofMan	(2011 thru 2014) The NRCA Roofing Manual

SHEET METAL AND AIR CONDITIONING CONTRACTORS' NATIONAL ASSOCIATION (SMACNA)

SMACNA 1793	(2012) Architectural Sheet Metal Manual, 7th Edition

SOCIETY FOR PROTECTIVE COATINGS (SSPC)

SSPC Paint 15	(1999; E 2004) Steel Joist Shop Primer
SSPC Painting Manual	(2002) Good Painting Practice, Steel Structures Painting Manual, Volume 1
SSPC SP 2	(1982; E 2000; E 2004) Hand Tool Cleaning

U.S. DEPARTMENT OF DEFENSE (DOD)

UFC 4-010-01	(2012) DoD Minimum Antiterrorism Standards for Buildings

UNDERWRITERS LABORATORIES (UL)

UL Bld Mat Dir (2012) Building Materials Directory

1.2 GENERAL REQUIREMENTS

1.2.1 Structural Performance

Provide metal building systems capable of withstanding the effects of gravity loads and the following loads and stresses within the limits and conditions indicated.

1.2.1.1 Engineering

Design metal building systems conforming to procedures described in MBMA MBSM.

1.2.1.2 Design Loads

Conform to the requirements of MBMA MBSM, ASCE 7, and the building code applicable to the project geographical location.

1.2.1.3 Live Loads

Include all vertical loads induced by the building occupancy indicated on the drawings, as well as loads induced by maintenance workers, materials and equipment for roof live loads.

1.2.1.4 Roof Snow Loads

Include vertical loads induced by the ground snow load at the project site of 10 psf. Allow for unbalanced and drift loads.

1.2.1.5 Wind Loads

Include horizontal loads induced by a basic wind speed Project site of 140 mph.

1.2.1.6 Collateral Loads

Include additional dead loads other than the weight of metal building system for permanent items such as sprinklers, mechanical systems, electrical systems, and ceilings.

1.2.1.7 Auxiliary Loads

Include dynamic live loads, such as those generated by cranes and materials-handling equipment indicated on detail drawings.

1.2.1.8 Load Combinations

Design metal building systems to withstand the most critical effects of load factors and load combinations as required by MBMA MBSM, ASCE 7, and the building code applicable to the project location.

1.2.1.9 Deflection Limits

Engineer assemblies to withstand design loads with deflections no greater

than the following:

a. Purlins and Rafters; vertical deflection of 1/240 of the span.

b. Girts; horizontal deflection of 1/240 of the span.

c. Metal Roof Panels; vertical deflection of 1/240 of the span.

d. Metal Wall Panels; horizontal deflection of 1/240 of the span.

Design secondary framing system to accommodate deflection of primary building structure and construction tolerances, and to maintain clearances at openings. Provide metal panel assemblies capable of withstanding the effects of loads and stresses indicated, based on testing according to ASTM E1592.

1.2.2 Seismic Performance

Design and engineer metal building system capable of withstanding the effects of earthquake motions determined according to ASCE 7, AISC 341, and the applicable portions of the building code in the geographic area where the construction will take place.

1.2.3 Thermal Movements

Provide metal panel systems that allow for thermal movements resulting from the following maximum change (range) in ambient and surface temperatures by preventing buckling, opening of joints, overstressing of components, failure of joint sealants, failure of connections, and other detrimental effects. Base engineering calculation on surface temperatures of materials due to both solar heat gain and nighttime-sky heat loss as follows:

Temperature Change (Range); 120 F, ambient; 180 F, material surfaces.

1.2.4 Thermal Performance

Provide insulated metal panel assemblies with the following maximum U-factors and minimum R-values for opaque elements when tested according to ASTM C136/C136M or ASTM C518.

1.2.4.1 Metal Roof Panel Assemblies

a. R-Value: as per drawings

1.2.4.2 Metal Wall Panel Assemblies

a. R-Value: as per drawings

1.2.5 Air Infiltration for Metal Roof Panels

Air leakage through assembly must not exceed 0.06 cfm/sq.ft. of roof area when tested according to ASTM E1680 at negative test-pressure difference of 1.57 lb/sq.ft. .

1.2.6 Air Infiltration for Metal Wall Panels

Air leakage through assembly of not more than 0.06 cfm/sq.ft. of wall area

when tested according to ASTM E283 at static-air-pressure difference of 6.24 lbf/sq.ft. .

1.2.7 Water Penetration for Metal Roof Panels

No water penetration when tested according to ASTM E1646 at test-pressure difference of 2.86 lbf/sq.ft. .

1.2.8 Water Penetration for Metal Wall Panels

No water penetration when tested according to ASTM E331 at a minimum differential pressure of 20 percent of inward-acting, wind-load design pressure of not less than 6.24 lbf/sq.ft. . and not more than 12 lbf/sq. ft.

1.2.9 Wind-Uplift Resistance

Provide metal roof panel assemblies that comply with ASCE 7,.

1.3 DEFINITIONS

ASTM DEFONLINE applies to this definition paragraph.

a. Bay: Dimension between main frames measured normal to frame (at centerline of frame) for interior bays, and dimension from centerline of first interior main frame measured normal to end wall (outside face of end-wall girt) for end bays.

b. Building Length: Dimension of the building measured perpendicular to main framing from end wall to end wall (outside face of girt to outside face of girt).

c. Building Width: Dimension of the building measured parallel to main framing from sidewall to sidewall (outside face of girt to outside face of girt).

d. Clear Span: Distance between supports of beams, girders, or trusses (measured from lowest level of connecting area of a column and a rafter frame or knee).

e. Eave Height: Vertical dimension from finished floor to eave (the line along the sidewall formed by intersection of the planes of the roof and wall).

f. Clear Height under Structure: Vertical dimension from finished floor to lowest point of any part of primary or secondary structure, not including crane supports, located within clear span.

g. Terminology Standard: Refer to MBMA "Metal Building Systems Manual" for definitions of terms for metal building system construction not otherwise defined in this Section or in referenced standards.

1.4 SYSTEM DESCRIPTION

General: Provide a complete, integrated set of metal building system manufacturer's standard mutually dependent components and assemblies that form a metal building system capable of withstanding structural and other loads, thermally induced movement, and exposure to weather without failure or infiltration of water into building interior. Include primary and secondary framing, metal roof panels, metal wall panels, and accessories

complying with requirements indicated.

Provide metal building system of size and with spacing, slopes, and spans indicated. The building system shall comply with ATFP requirements of UFC 4-010-01. Refer to structural drawings for additional information and requirements.

The buiding system shall provide an air barrier in accordance with requirements set forth in Section 07 15 00.00 22 AIR AND VAPOR BARRIERS. The air barrier system is provided in the roof by the vapor barrier fabric liner and in the walls as an air barrier coating on the wall sheathing. Refer to Section 09 29 00 GYPSUM BOARD. Care shall be taken to provide a seal between wall and roof air barrier systems, provide continuous transition membranes at all eaves, doors, windows, louvers, etc, and seal all penetrations through the air barrier especially in the roof.

1.4.1 Primary Frame Type

a. Rigid Clear Span: Solid-member, structural-framing system without interior columns.

b. Rigid Modular: Solid-member, structural-framing system with interior columns.

1.4.2 Fixed End-Wall Framing

Provide manufacturer's standard fixed end wall, for buildings not required to be expandable, consisting of primary frame, capable of supporting one-half of a bay design load, and end-wall columns.

1.4.3 Secondary Frame Type

Provide manufacturer's standard purlins and joists and girts as indicated on drawings.

1.4.4 Eave Height

Eave height must be Manufacturer's standard height, as indicated by nominal height on Drawings.

1.4.5 Bay Spacing

Bay Spacing must be as indicated on drawings.

1.4.6 Roof Slope

Roof slope must be as indicated on drawings.

1.4.7 Roof System

Provide manufacturer's standard standing-seam metal roof panels. The roof thickness shall not be less than 22 gage. Roof purlin wall Z girt and gage shall be shown on the pre-engineered building shop drawings

1.4.8 Exterior Wall System

Provide manufacturer's standard field-assembled, insulated metal wall panels.

1.5 SUBMITTALS

Government approval is required for submittals with a "G" designation; submittals not having a "G" designation are for Contractor Quality Control approval. Submittals with an "S" are for inclusion in the Sustainability Notebook, in conformance to Section 01 33 29 SUSTAINABILITY REPORTING. Submit the following in accordance with Section 01 33 00 SUBMITTAL PROCEDURES:

SD-01 Preconstruction Submittals

Manufacturer's Qualifications; G

SD-02 Shop Drawings

Detail Drawings; G

SD-03 Product Data

Manufacturer's catalog data; G

SD-04 Samples

Coil Stock, 12 inches long by the actual panel width

Roof Panels, 12 inches long by actual panel width

Wall Panels, 12 inches long by actual panel width

Fasteners

Metal Closure Strips 10 inches long of each type; G

Vapor Barrier; G

Manufacturer's color charts and chips, 4 by 4 inches; G

SD-05 Design Data

Manufacturer's descriptive and technical literature; G

Manufacturer's building design analysis; G

SD-06 Test Reports

test reports; G

Coatings and base metals; G

Factory Color Finish Performance Requirements; G

SD-07 Certificates

system components ; G

Coil Stock certification; G

Aluminized Steel Repair Paint; G

Galvanizing Repair Paint; G

Enamel Repair Paint; G

Qualification of Manufacturer; G

Qualification of Erector; G

SD-08 Manufacturer's Instructions

Installation of Roof and Wall panels; G

shipping, handling, and storage; G

SD-11 Closeout Submittals

Manufacturer's Warranty; G

Contractor's Warranty for Installation; G

1.6 QUALITY ASSURANCE

1.6.1 Pre-Erection Conference

After submittals are received and approved but before metal building system work, including associated work, is performed, the Contracting Officer will hold a pre-erection conference to review the following:

a. The detail drawings, specifications, and manufacturer's descriptive and technical literature.

b. Finalize construction schedule and verify availability of materials, erector's personnel, equipment, and facilities needed to make progress and avoid delays.

c. Methods and procedures related to metal building system erection, including, but not limited to: qualification of manufacturer, qualification of erector, manufacturer's catalog data, building design analysis, written instructions and test reports.

d. Support conditions for compliance with requirements, including alignment between and erection of structural members.

e. Flashing, special roofing and siding details, roof and wall penetrations, openings, and condition of other construction that will affect metal building system, including coatings and base metals, factory color finish performance requirements, system components, and certificates for coil stock.

f. Governing regulations and requirements for, certificates, insurance, tests and inspections if applicable.

g. Temporary protection requirements for metal panel assembly during and after installation.

h. Samples of aluminized steel repair paint, galvanizing repair paint, and enamel repair paint.

1.6.1.1 Pre-Roofing and Siding Installation Conference

After structural framing system erection and approval but before roofing, siding, insulation and vapor barrier work, including associated work, is performed; the Contracting Officer will hold a pre-roofing and siding conference to review the following:

a. Examine purlins, sub-girts and formed shapes conditions for compliance with requirements, including flatness and attachment to structural members.

b. Review structural limitations of purlins, sub-girts and formed shapes during and after roofing and siding.

c. Review flashings, special roof and wall details, roof drainage, roof and wall penetrations, roof equipment curbs, and condition of other construction that will affect the metal building system.

d. Review temporary protection requirements for metal roof and wall panels' assembly during and after installation.

e. Review roof and wall observation and repair procedures after metal building system erection.

1.6.2 Manufacturer's Technical Representative

The representative must have authorization from manufacturer to approve field changes and be thoroughly familiar with the products, erection of structural framing and installation of roof and wall panels in the geographical area where construction will take place.

1.6.3 Manufacturer's Qualifications

Metal building system manufacturer must have a minimum of five (5) years experience as a qualified manufacturer and a member of MBMA of metal building systems and accessory products.

Provide engineering services by an authorized currently licensed engineer in the geographical area where construction will take place, having a minimum of four years experience as an engineer knowledgeable in building design analysis, protocols and procedures for the "Metal Building Systems Manual" (MBMA MBSM); ASCE 7, the building code in the geographic area where the construction will take place and ASTM E1592.

Provide certified engineering calculations using the products submitted for:

a. Roof and Wall Wind Loads with basic wind speed, exposure category, co-efficient, importance factor, designate type of facility, negative pressures for each zone, methods and requirements of attachment.

b. Roof Dead and Live Loads

c. Collateral Loads

d. Foundation Loads

e. Roof Snow Load

f. Seismic Loads

g. Anti-terrorism/Force Protection Design per UFC 4-010-01

1.6.4 Qualification of Erection Contractor

An experienced erector who has specialized in erecting and installing work similar in material, design, and extent to that indicated for this Project and must be approved and certified by the metal building system manufacturer.

1.6.5 Single Source

Obtain primary and secondary components and structural framing members, each type of metal roof, wall and liner panel assemblies, clips, closures and other accessories from the standard products of the single source from a single manufacturer to operate as a complete system for the intended use.

1.6.6 Welding

Qualify procedures and personnel according to AWS A5.1/A5.1M, AWS D1.1/D1.1M, and AWS D1.3/D1.3M.

1.6.7 Structural Steel

Comply with AISC 325, AISC 360, for design requirements and allowable stresses.

1.6.8 Cold-Formed Steel

Comply with AISC/AISI 121 and AISI SG03-3 for design requirements and allowable stresses.

1.6.9 Fire-Resistance Ratings

Where indicated, provide metal panels identical to those of assemblies tested for fire resistance per ASTM E119 by a qualified testing agency. Identify products with appropriate markings of applicable testing agency.

Indicate design designations from UL Bld Mat Dir or from the listings of another qualified testing agency. Combustion Characteristics must conform to ASTM E136.

1.6.10 Surface-Burning Characteristics

Provide metal panels having insulation and vapor barrier material with the following surface-burning characteristics as determined by testing identical products according to ASTM E84 by a qualified testing agency. Identify products with appropriate markings of applicable testing agency showing:

a. Flame-Spread Index: 25 or less.
b. Smoke-Developed Index: 450 or less.

1.6.11 Fabrication

Fabricate and finish metal panels and accessories at the factory to greatest extent possible, by manufacturer's standard procedures and processes and as necessary to fulfill indicated performance requirements. Comply with indicated profiles with dimensional and structural requirements

Provide metal panel profile, including major ribs and intermediate stiffening ribs, if any, for full length of panel. Aluminum and aluminum-alloy sheet and plate must conform to ASTM B209.

Fabricate metal panel side laps with factory-installed captive gaskets or separator strips that provide a tight seal and prevent metal-to-metal contact, in a manner that will seal weather-tight and minimize noise from movements within panel assembly.

Sheet Metal Accessories: Fabricate flashing and trim to comply with recommendations in SMACNA 1793 that apply to the design, dimensions, metal, and other characteristics of item indicated:

a. Form exposed sheet metal accessories that are without excessive oil canning, buckling, and tool marks and that are true to line and levels indicated, with exposed edges folded back to form hems.

b. End Seams: Fabricate nonmoving seams with flat-lock seams. Form seams and seal with epoxy seam sealer. Rivet joints for additional strength.

c. Sealed Joints: Form non-expansion but movable joints in metal to accommodate elastomeric sealant to comply with SMACNA standards.

d. Conceal fasteners and expansion provisions where possible. Exposed fasteners are not allowed on faces of accessories exposed to view.

e. Fabricate cleats and attachment devices of size and metal thickness recommended by SMACNA or by metal building system manufacturer for application, but not less than thickness of metal being secured.

1.6.12 Finishes

Comply with NAAMM AMP 500 for recommendations for applying and designating finishes.

Appearance of Finished Work: Noticeable variations in same piece are not acceptable. Variations in appearance of adjoining components are acceptable if they are within the range of approved Samples and are assembled or installed to minimize contrast.

1.7 SHIPPING, HANDLING AND STORAGE

1.7.1 Delivery

Package and deliver components, sheets, metal panels, and other manufactured items so as not to be damaged or deformed and protected during transportation and handling.

Stack and store metal panels horizontally on platforms or pallets, covered with suitable weather-tight and ventilated covering to ensure dryness, with positive slope for drainage of water. Store in a manner to prevent bending, warping, twisting, and surface damage. Do not store metal wall panels in contact with other materials that might cause staining, denting, or other surface damage. Retain strippable protective covering on metal panel for entire period up to metal panel installation.

1.8 PROJECT CONDITIONS

1.8.1 Weather Limitations

Proceed with installation preparation only when existing and forecasted weather conditions permit Work to proceed without water entering into existing panel system or building.

1.8.2 Field Measurements

1.8.2.1 Established Dimensions for Foundations

Comply with established dimensions on approved anchor-bolt plans, established foundation dimensions, and proceed with fabricating structural framing. Do not proceed without verifying field measurements. Coordinate anchor-bolt installation to ensure that actual anchorage dimensions correspond to established dimensions.

1.8.2.2 Established Dimensions for Metal Panels

Where field measurements cannot be made without delaying the Work, either establish framing and opening dimensions and proceed with fabricating metal panels without field measurements, or allow for field trimming metal panels. Coordinate construction to ensure that actual building dimensions, locations of structural members, and openings correspond to established dimensions.

1.8.2.3 Verification Record

Verify locations of all framing and opening dimensions by field measurements before metal panel fabrication and indicate measurements on Shop Drawings.

1.9 COORDINATION

Coordinate size and location of concrete foundations and casting of anchor-bolt inserts into foundation walls and footings. Concrete, reinforcement, and formwork requirements are specified in section on CAST-IN-PLACE CONCRETE.

Coordinate installation of fire suppression system equipment supports piping and supports and accessories, which are specified in Division 21 - FIRE SUPPRESSION.

Coordinate installation of plumbing system equipment supports piping and supports and accessories, which are specified in Division 22 - PLUMBING.

Coordinate installation of HVAC system equipment supports ductwork and supports piping and supports and accessories, which are specified in Division 23 - HEATING, VENTILATING AND AIR-CONDITIONING (HVAC).

Coordinate installation of roof curbs equipment supports and roof penetrations, which are specified in Division 07 - THERMAL AND MOISTURE PROTECTION.

Coordinate metal panel assemblies with rain drainage work, flashing, trim, and construction of supports and other adjoining work to provide a leak-proof, secure, and non-corrosive installation.

1.10 WARRANTY

1.10.1 Building System Warranty

Furnish manufacturer's no-dollar-limit warranty for the metal building system. The warranty period is to be no less than 1 year from the date of acceptance of the work and be issued directly to the Government. The warranty must provide that if within the warranty period, the metal building system shows evidence of deterioration resulting from defective materials and/or workmanship, correcting of any defects is the responsibility of the metal building system manufacturer. Repairs that become necessary because of defective materials and workmanship while metal building system is under warranty are to be performed within 72 hours after notification, unless additional time is approved by the Contracting Officer. Failure to perform repairs within 72 hours of notification will constitute grounds for having emergency repairs performed by others and will not void the warranty.

1.10.2 Roof System Weather-Tightness Warranty

Furnish manufacturer's no-dollar-limit standard warranty for the metal panel system. The warranty period is to be no less than 20 years from the date of acceptance of the work and be issued directly to the Government.

The warranty is to provide that if within the warranty period the roof panel system shows evidence of corrosion, perforation, rupture, lost of weather-tightness or excess weathering due to deterioration of the panel system resulting from defective materials and correction of the defective workmanship is to be the responsibility of the metal building system manufacturer.

Repairs that become necessary because of defective materials and workmanship while roof panel system is under warranty are to be performed within 72 hours after notification, unless additional time is approved by the Contracting Officer. Failure to perform temporary repairs within 72 hours of notification will constitute grounds for having emergency repairs performed by others and not void the warranty. Immediate follow-up and completion of permanent repairs must be performed within 14 days from date of notification.

1.10.3 Roof and Wall Panel Finish Warranty

Furnish manufacturer's no-dollar-limit warranty for the metal panel system. The warranty period is to be no less than 20 years from the date of acceptance of the work and be issued directly to the Government.

The warranty is to provide that if within the warranty period the metal panel system shows evidence of checking, delaminating cracking, peeling, chalk in excess of a numerical rating of eight, as determined by ASTM D4214 test procedures; or change colors in excess of five CIE or Hunter units in accordance with ASTM D2244 or excess weathering due to deterioration of the panel system resulting from defective materials and finish or correction of the defective workmanship is to be the responsibility of the metal building system manufacturer.

Liability under this warranty is exclusively limited to replacing the defective coated materials.

Repairs that become necessary because of defective materials and workmanship while roof and wall panel system is under warranty are to be

performed within 72 hours after notification, unless additional time is approved by the Contracting Officer. Failure to perform repairs within hours of notification will constitute grounds for having emergency repairs performed by others and not void the warranty.

PART 2 PRODUCTS

2.1 STRUCTURAL FRAMING MATERIALS

2.1.1 W-Shapes

ASTM A992/A992M; ASTM A572/A572M or ASTM A529/A529M.

2.1.2 Channel, Angles, M-Shapes and S-Shapes

ASTM A36/A36M; ASTM A572/A572M or ASTM A529/A529M.

2.1.3 Plate and Bar

ASTM A36/A36M, ASTM A572/A572M or ASTM A529/A529M.

2.1.4 Steel Pipe

ASTM A36/A36M, ASTM A53/A53M, ASTM A572/A572M or ASTM A529/A529M.

2.1.5 Cold-Formed and Hot Formed Hollow Structural Sections

Cold formed:ASTM A500/A500M or ASTM B221, ASTM B221M. Hot-formed: ASTM A501/A501M.

2.1.6 Structural-Steel Sheet

Hot-rolled, ASTM A1011/A1011M or cold-rolled, ASTM A1008/A1008M.

2.1.7 Metallic-Coated Steel Sheet

ASTM A653/A653M, ASTM A606/A606M.

2.1.8 Metallic-Coated Steel Sheet Pre-painted with Coil Stock Coating

Steel sheet metallic coated by the hot-dip process and pre-painted by the coil-coating process to comply with ASTM A755/A755M.

a. Zinc-Coated (Galvanized) Steel Sheet: ASTM A653/A653M, and ASTM A123/A123M.

b. Aluminum-Zinc Alloy-Coated Steel Sheet: ASTM A792/A792M, and ASTM A463/A463M.

2.1.9 High-Strength Bolts, Nuts, and Washers

ASTM A325, heavy hex steel structural bolts; ASTM A563 heavy hex carbon-steel nuts; and ASTM F436 hardened carbon-steel washers.

Finish: Plain.

Tension-Control, High-Strength Bolt-Nut-Washer Assemblies: ASTM F1852, heavy-hex-head steel structural bolts with spline.

Finish: Plain.

2.1.10 Non-High-Strength Bolts, Nuts, and Washers

ASTM A307, ASTM A563, and ASTM F844.

Finish: Plain.

2.1.11 Anchor Rods

ASTM F1554 .

a. Configuration: Straight.
b. Nuts: ASTM A563 hex carbon steel.
c. Plate Washers: ASTM A36/A36M carbon steel.
d. Washers: ASTM F436 hardened carbon steel.
e. Finish: Plain.

2.1.12 Threaded Rods

ASTM A36/A36M .

a. Nuts: ASTM A563 hex carbon steel.
b. Washers: ASTM A36/A36M carbon steel.
c. Finish: Plain .

2.1.13 Primer

SSPC-Paint 15, Type I, red oxide.

2.2 FABRICATION

2.2.1 General

Comply with MBMA MBSM - "Metal Building Systems Manual": Chapter IV, Section 9, "Fabrication and Erection Tolerances."

2.3 STRUCTURAL FRAMING

2.3.1 General

Clean all framing members to remove loose rust and mill scale. Provide 1 shop coat of primer to an average dry film thickness of 1 mil according to SSPC SP 2. Balance of painting and coating procedures must conform to SSPC Paint 15 and SSPC Painting Manual.

2.3.2 Primary Framing

Manufacturer's standard structural primary framing system includes transverse and lean-to frames; rafter, rakes, and canopy beams; sidewall, intermediate, end-wall, and corner columns; and wind bracing designed to withstand required loads and specified requirements. Provide frames with attachment plates, bearing plates, and splice members. Provide frame span and spacing indicated.

Shop fabricate framing components by welding or by using high-strength bolts to the indicated size and section with base-plates, bearing plates, stiffeners, and other items required. Cut, form, punch, drill, and weld framing for bolted field erection.

a. Rigid Clear-Span Frames: I-shaped frame sections fabricated from shop-welded, built-up steel plates or structural-steel shapes. Interior columns are not permitted.

b. Rigid Modular Frames: I-shaped frame sections fabricated from shop-welded, built-up steel plates or structural-steel shapes. Provide interior columns fabricated from steel round pipe steel tube shop-welded, built-up steel plates.

c. Frame Configuration: Single gable.

d. Exterior Column Type: Uniform depth (outside flange to outside flange column depth not to exceed 24 inches).

e. Rafter Type: Tapered.

2.3.3 Secondary Framing

Manufacturer's standard secondary framing members, including purlins, girts, eave struts, flange bracing, base members, gable angles, clips, headers, jambs, and other miscellaneous structural members. Fabricate framing from cold-formed, structural-steel sheet or roll-formed, metallic-coated steel sheet pre-painted with coil coating, unless otherwise indicated.

Shop fabricate framing components by roll-forming or break-forming to the indicated size and section with base-plates, bearing plates, stiffeners, and other plates required for erection. Cut, form, punch, drill, and weld secondary framing for bolted field connections to primary framing.

a. Purlins: C or Z-shaped sections; fabricated from steel sheet, built-up steel plates, or structural-steel shapes; minimum depth As indicated .

b. Girts: C or Z-shaped sections; fabricated from steel sheet, built-up steel plates, or structural-steel shapes. Form ends of Z-sections with stiffening lips angled 40 to 50 degrees to flange minimum depth as indicated.

c. Eave Struts: Unequal-flange, C-shaped sections; fabricated from steel sheet, built-up steel plates, or structural-steel shapes; to provide adequate backup for metal panels.

d. Flange Bracing: Structural-steel angles or cold-formed structural tubing to stiffen primary frame flanges.

e. Sag Bracing: Structural-steel angles.

f. Base or Sill Angles: Zinc-coated (galvanized) steel sheet.

g. Purlin and Girt Clips: Steel sheet. Provide galvanized clips where clips are connected to galvanized framing members.

h. Secondary End-Wall Framing: Manufacturer's standard sections fabricated from zinc-coated (galvanized) steel sheet .

i. Framing for Openings: Channel shapes; fabricated cold-formed,

structural-steel sheet or structural-steel shapes. Frame head and jamb of door openings, and head, jamb, and sill of other openings.

j. Miscellaneous Structural Members: Manufacturer's standard sections fabricated from cold-formed, structural-steel sheet; built-up steel plates; or zinc-coated (galvanized) steel sheet; designed to withstand required loads.

2.3.4 Bracing

Provide adjustable wind bracing as follows:

a. Rods: ASTM A36/A36M; ASTM A572/A572M; or ASTM A529/A529M threaded full length at each end.

b. Angles: Fabricated from structural-steel shapes to match primary framing, of size required to withstand design loads.

c. Rigid Portal Frames: Fabricate from shop-welded, built-up steel plates or structural-steel shapes to match primary framing; of size required to withstand design loads.

d. Diaphragm Action of Metal Panels: Design metal building to resist wind forces through diaphragm action of metal panels.

e. Bracing: Provide wind bracing using any method specified above, at manufacturer's option.

2.4 PANEL MATERIALS

2.4.1 Steel Sheet

Roll-form steel wall panels to the specified profile, 22 gauge and depth as indicated. See specification section 07 41 13 METAL ROOF PANELS for roof panel information. Material must be plumb and true, and within the tolerances listed:

a. Galvanized Steel Sheet conforming to ASTM A653/A653M and AISI SG03-3.

b. Aluminum-Zinc Alloy-coated Steel Sheet conforming to ASTM A792/A792M and AISI SG03-3.

c. Individual panels to have continuous length to cover the entire length of any unbroken roof slope wall area with no joints or seams and formed without warping, waviness, or ripples that are not part of the panel profile and free of damage to the finish coating system.

d. Provide panels with thermal expansion and contraction consistent with the type of system specified;
wall panel profile, depth and type to match existing pre-engineered building wall panels in the immediate vincity of the building site.

2.4.2 Finish

All panels are to receive a factory-applied polyvinylidene fluoride finish consisting of a baked-on top-coat with a manufacturer's recommended prime coat conforming to the following:

a. Metal Preparation: All metal is to have the surfaces carefully prepared for painting on a continuous process coil coating line by alkali cleaning, hot water rinsing, application of chemical conversion coating, cold water rinsing, sealing with acid rinse, and thorough drying.

b. Prime Coating: A base coat of epoxy paint, specifically formulated to interact with the top-coat, is to be applied to the prepared surfaces by roll coating to a dry film thickness of 0.20 plus 0.05 mils. This prime coat must be oven cured prior to application of finish coat.

c. Exterior Finish Coating: Apply the finish coating over the primer by roll coating to dry film thickness of 0.80 plus 5 mils (3.80 plus 0.50 mils for Vinyl Plastisol) for a total dry film thickness of 1.00 plus 0.10 mils (4.00 plus 0.10 mils for Vinyl Plastisol). This finish coat must be oven-cured.

d. Interior Finish Coating: Apply a wash-coat on the reverse side over the primer by roll coating to a dry film thickness of 0.30 plus 0.05 mils for a total dry film thickness of 0.50 plus 0.10 mils. The wash-coat must be oven-cured.

e. Color: The exterior finish chosen from full range of manufacturer's color charts and chips Final color selection by AOR as approved by user.

f. Physical Properties: Coating must conform to the industry and manufacturer's standard performance criteria as listed by the following certified test reports:

Chalking: ASTM DEFONLINE
Color Change and Conformity: ASTM D2244
Weatherometer: ASTM G152, ASTM G153 and ASTM D822
Humidity: ASTM D2247 and ASTM D714
Salt Spray: ASTM B117
Chemical Pollution: ASTM D1308
Gloss at 60 degrees: ASTM D523
Pencil Hardness: ASTM D3363
Reverse Impact: ASTM D2794
Flexibility: ASTM D522/D522M
Abrasion: ASTM D968
Flame Spread: ASTM E84

2.4.3 Repair Of Finish Protection

Repair paint for color finish enameled metal panel must be compatible paint of the same formula and color as the specified finish furnished by the metal panel manufacturer, conforming to ASTM A780/A780M.

2.5 MISCELLANEOUS METAL FRAMING

2.5.1 General

Cold-formed metallic-coated steel sheet conforming to ASTM A653/A653M and specified in Section 05 40 00 COLD-FORMED METAL FRAMING unless otherwise indicated.

2.5.2 Fasteners for Miscellaneous Metal Framing

Refer to the following paragraph "FASTENERS".

2.6 FASTENERS

2.6.1 General

Type, material, corrosion resistance, size and sufficient length to penetrate the supporting member a minimum of 1 inch with other properties required to fasten miscellaneous metal framing members to substrates in accordance with the metal panel manufacturer's and ASCE 7 requirements.

2.6.2 Exposed Fasteners

Fasteners for metal panels to be corrosion resistant coated steel, aluminum, stainless steel, or nylon capped steel compatible with the sheet panel or flashing and of a type and size recommended by the manufacturer to meet the performance requirements and design loads. Fasteners for accessories to be the manufacturer's standard. Provide an integral metal washer matching the color of attached material with compressible sealing EPDM gasket approximately 3/32 inch thick.

2.6.3 Screws

Screws to be corrosion resistant coated steel, aluminum and/or stainless steel being the type and size recommended by the manufacturer to meet the performance requirements.

2.6.4 Attachment Clips

Fabricate clips from steel hot-dipped galvanized in accordance with ASTM A653/A653M or Series 300 stainless steel. Size, shape, thickness and capacity as required meeting the insulation thickness and design load criteria specified.

2.7 FRAMES AND MATERIALS FOR OPENINGS

2.7.1 Doors

See Division 08.

2.7.2 Windows

Window Assemblies as specified in Division 08 - OPENINGS unless otherwise indicated.

2.8 ACCESSORIES

2.8.1 General

All accessories to be compatible with the metal panels; sheet metal flashing, trim, metal closure strips, caps and similar metal accessories must not be less than the minimum thickness specified for the metal panels. Exposed metal accessories/finishes to match the panels furnished, except as otherwise indicated. Molded foam rib, ridge and other closure strips to be non-absorbent closed-cell or solid-cell synthetic rubber or pre-molded neoprene to match configuration of the panels.

2.8.2 Roof and Wall Accessories and Specialties

Steel roof curbs, equipment supports, roof hatches, dropout-type heat and smoke vents, hatch-type heat and smoke vents, gravity and roof ridge ventilators, wall louvers and other miscellaneous roof and wall equipment or penetrations conforming to AAMA, ASTM, and UL as specified in Division 07 unless otherwise indicated.

2.8.3 Roof Insulation System

Provide a thermal roof insulation system designed specifically for pre-engineered metal buildings. The system shall be installed prior to the installation of the roofing panels and include an integral white vapor barrier that, when fastened to the roof purlins using system steel straps, affords fall protection to the workers. System shall also include foam thermal blocks to separate the top of the metal purlins from the underside of the metal roofing.

2.8.3.1 Insulation

Provide formaldehyde-free glass fiber batts complying with ASTM C991 Type 1; ASTM E136 and ASTM E84; unfaced. Thermal value: R-30 minimum. Thickness of insulation blankets: lower layer to match purlin depth and upper layer above purlins 3.5" minimum; Flame/Smoke 25/150 or less.

2.8.3.2 Thermal Blocks

Provide 1 inch foam blocks at top flange of purlins to act as a thermal block between the metal roofing panels and the roof structure; locate foam blocks at each roof panel fastener that penetrates a purlin.

2.8.3.3 Barrier Liner Fabric - Air Barrier

Provide woven, reinforced, high-density polyethylene complying with ASTM C1136. Perm rating: 0.02 as per ASTM E96/E96M. Product shall comply with ASTM E2178 for air permeance. Flame/Smoke: 25/50 in accordance with ASTM E84. Fabric Seams: factory performed triple extrusion welded. Color: black.

2.8.3.4 Vapor Barrier Tape

Double-sided sealant tape 3/4 inch wide by 1/32 inch thick, minimum.

2.8.3.5 Straps

100 KSI minimum yield tempered, high-tensile-strength steel. Not less than 0.020 inch (0.50 mm) thick by 1 inch (25 mm) by continuous length. Galvanized, primed, and painted to match specified black finish color on the exposed side.

2.8.3.6 Fasteners

1. For light gage steel: 12 by 3/4 inch plated Tek 2 type screws with sealing washer, painted to match specified color.
2. For heavy gage steel: #12 by 1-1/2 inch plated Tek 4 type screws with sealing washer, painted to match specified color.
3. All fasteners and accessories required for a complete installation shall be provided by the insulation system manufacturer.

2.8.3.7 Wall Insulation System

Provide thermal wall insulation system designed specifically for pre-engineered metal buildings. The wall Insualtion System shall be by the same manufacturer as the Roof Insulation System and include an integral white vapor barrier. System shall also include foam thermal blocks or tape to separate the exterior metal wall panels from the supporting metal girts. The material used for the Insulation, Barrier Fabric Liner, Thermal Blocks and Fasteners are similar to roof products listed above. Provide wall insulation holders designed to prevent the wall insulation from gradually settling within the wall.

2.8.4 Rubber Closure Strips

Closed-cell, expanded cellular rubber conforming to ASTM D1056 and ASTM D1667; extruded or molded to the configuration of the specified metal panel and in lengths supplied by the metal panel manufacturer.

2.8.5 Metal Closure Strips

Factory fabricated steel closure strips to be the same gauge , color, finish and profile of the specified roof and wall panel.

2.8.6 2.6.6 Joint Sealants

2.8.6.1 Sealants

Sealants are to be an approved gun type for use in hand or air-pressure caulking guns at temperatures above 40 degrees F(or frost-free application at temperatures above 10 degrees F with minimum solid content of 85 percent of the total volume. Sealant is to dry with a tough, durable surface skin which permits it to remain soft and pliable underneath, providing a weather-tight joint. No migratory staining is permitted on painted or unpainted metal, stone, glass, vinyl, or wood.

Prime all joints to receive sealants with a compatible one-component or two-component primer as recommended by the metal panel manufacturer.

2.8.6.2 Shop-Applied

Sealant for shop-applied caulking must be an approved gun grade, non-sag one component polysulfide or silicone conforming to ASTM C920, Type II, and with a curing time to ensure the sealant's plasticity at the time of field erection.

2.8.6.3 Field-Applied

Sealant for field-applied caulking must be an approved gun grade, non-sag one component polysulfide or two-component polyurethane with an initial maximum Shore A durometer hardness of 25, and conforming to ASTM C920, Type II. Color to match panel colors.

2.8.6.4 Tape Sealant

Pressure sensitive, 100 percent solid with a release paper backing; permanently elastic, non-sagging, non-toxic and non-staining as approved by the metal panel manufacturer.

2.9 SHEET METAL FLASHING AND TRIM

Provide all exterior sheet meal flashing and trim items such as gutters, downspouts, rake and eave flashing, sill flashing, etc. Metal shall match color and finish and the wall and roof panels.

2.9.1 Fabrication

Shop fabricate sheet metal flashing and trim where practicable to comply with recommendations in SMACNA 1793 that apply to design, dimensions, metal, and other characteristics of item indicated. Obtain field measurements for accurate fit before shop fabrication.

Fabricate sheet metal flashing and trim without excessive oil canning, buckling, and tool marks and true to line and levels indicated, with exposed edges folded back to form hems.

2.10 FINISHES

2.10.1 General

Comply with NAAMM AMP 500 for recommendations for applying and designating finishes.

2.10.2 Appearance of Finished Work

Variations in appearance of abutting or adjacent pieces are acceptable if they are within one-half of the range of approved Samples. Noticeable variations in the same piece are not acceptable. Variations in appearance of other components are acceptable if they are within the range of approved Samples and are assembled or installed to minimize contrast.

PART 3 EXECUTION

3.1 EXAMINATION

Before erection proceeds examine with the erector present the concrete foundation dimensions, concrete and/or masonry bearing surfaces, anchor bolt size and placement, survey slab elevation, locations of bearing plates, and other embedment's to receive structural framing with the metal building manufacturer's templates and drawings before erecting any steel components for compliance with requirements for installation tolerances and other conditions affecting performance of the Work.

Examine primary and secondary framing to verify that rafters, purlins, angles, channels, and other structural and metal panel support members and anchorages have been installed within alignment tolerances required by metal building manufacturer, UL, ASTM, ASCE 7 and as required by the building code for the geographical area where construction will take place.

Examine roughing-in for components and systems penetrating metal roof or wall panels to verify actual locations of penetrations relative to seam locations of metal panels before metal roof or wall panel installation.

Submit to the Contracting Officer a written report, endorsed by Erector, listing conditions detrimental to performance of the Work.

Proceed with erection only after unsatisfactory conditions have been corrected.

3.2 PREPARATION

Provide temporary shoring, guys, braces, and other supports during erection to keep the structural framing secure, plumb, and in alignment against temporary construction loading or loads equal in intensity of the building design loads. Remove temporary support systems when permanent structural framing, connections, and bracing are in place, unless otherwise indicated.

Clean substrates of substances harmful to insulation, including removing projections capable of interfering with insulation attachment and performance.

Miscellaneous Framing: Install sub-purlins, girts, angles, furring, and other miscellaneous support members or anchorage for the metal roof or wall panels, doors, windows, roof curbs, ventilators and louvers according to metal building manufacturer's written instructions.

3.3 ERECTION OF STRUCTURAL FRAMING

Erect metal building system according to manufacturer's written erection instructions, approved shop drawings and other erection documents in accordance with MBMA MBSM - "Metal Building Systems Manual".

Do not field cut, drill, or alter structural members without written approval from metal building system manufacturer's professional engineer and the Contracting Officer.

Set structural framing accurately in locations and to elevations indicated and according to AISC 325 specifications. Maintain structural stability of frame during erection.

Clean and roughen concrete and masonry bearing surfaces prior to setting plates. Clean bottom surface of plates.

Align and adjust structural framing before permanent bolt-up and connections. Perform necessary adjustments and alignment to compensate for changes or discrepancies in elevations.

Maintain erection tolerances of structural framing in accordance with AISC 360.

3.4 METAL WALL PANEL INSTALLATION

Provide metal wall panels of full length from sill to eave as indicated, unless otherwise indicated or restricted by shipping limitations. Anchor metal wall panels and other components of the Work securely in place, in accordance with MBMA MBSM.

Erect wall panel system in accordance with the approved erection drawings, the printed instructions and safety precautions of the metal building manufacturer.

Sheets are not to be subjected to overloading, abuse, or undue impact. Do not install bent, chipped, or defective sheets.

Sheets must be erected true and plumb and in exact alignment with the horizontal and vertical edges of the building, securely anchored, and with the indicated eave, and sill.

Work is to allow for thermal movement of the wall panel, movement of the building structure, and to provide permanent freedom from noise due to wind pressure.

Field cutting metal wall panels by torch is not permitted.

3.5 ROOF PANEL INSTALLATION

Provide metal roof panels of full length from eave to ridge or eave to wall as indicated, unless otherwise indicated or restricted by shipping limitations. Anchor metal roof panels and other components of the Work securely in place in accordance with NRCA RoofMan and MBMA MBSM.

Erect roofing system in accordance with the approved erection drawings, the printed instructions and safety precautions of the metal building manufacturer.

Sheets are not to be subjected to overloading, abuse, or undue impact. Do not install bent, chipped, or defective sheets.

Sheets must be erected true and plumb and in exact alignment with the horizontal and vertical edges of the building, securely anchored, and with the indicated rake and eave overhang.

Work must allow for thermal movement of the roofing, movement of the building structure, and provide permanent freedom from noise due to wind pressure.

Field cutting metal roof panels by torch is not permitted.

Roofing sheets must be laid with corrugations in the direction of the roof slope. End laps of exterior roofing must not be less than 8 inches; the side laps of standard exterior corrugated sheets must not be not less than 2-1/2 corrugations.

Do not permit storage, walking, wheeling, and trucking directly on applied roofing materials. Provide temporary walkways, runways, and platforms of smooth clean boards or planks as necessary to avoid damage to the installed roofing materials, and to distribute weight to conform to the indicated live load limits of roof construction.

3.6 METAL PANEL FASTENER INSTALLATION

Anchor metal panels and other components of the Work securely in place, using manufacturer's approved fasteners according to manufacturers' written instructions.

3.7 FLASHING, TRIM AND CLOSURE INSTALLATION

a. Comply with performance requirements, manufacturer's written installation instructions, and SMACNA 1793. Provide concealed fasteners where possible, and set units true to line and level as indicated. Install work with laps, joints, and seams that will be permanently watertight and weather resistant.

b. Sheet metalwork is to be accomplished to form weather-tight construction without waves, warps, buckles, fastening stresses or distortion, and allow for expansion and contraction. Cutting, fitting, drilling, and other operations in connection with sheet metal

required to accommodate the work of other trades is to be performed by sheet metal mechanics.

3.8 DOOR AND FRAME INSTALLATION

Install doors and frames plumb, rigid, properly aligned, and securely fastened in place according to manufacturer's written instructions. Coordinate installation with metal panel flashings and other components. Caulk and seal perimeter of each door frame with elastomeric sealant compatible with metal panels. Comply with installation requirements in Division 08 - OPENINGS.

3.9 WINDOW INSTALLATION

Install windows plumb, rigid, properly aligned, without warp or rack of frames or sash, and securely fastened in place according to manufacturer's written instructions. Coordinate installation with metal panel flashings and other components. Caulk and seal perimeter of each window frame with elastomeric sealant compatible with for metal panels. Comply with installation requirements in Division 08 - OPENINGS.

3.10 ACCESSORY INSTALLATION

3.10.1 General

Install accessories with positive anchorage to building and weather-tight mounting, and provide for thermal expansion. Coordinate installation with flashings and other components.

3.10.2 Dissimilar Metals

Where dissimilar metals contact one another or corrosive substrates are present, protect against galvanic action by painting dissimilar metal surfaces with bituminous coating, by applying rubberized-asphalt underlayment to each surface, or by other permanent separation techniques as recommended by the metal building manufacturer.

3.10.3 Gutters and Downspouts

Comply with performance requirements, manufacturer's written installation instructions, and install sheet metal roof drainage items to produce complete roof drainage system according to SMACNA 1793 recommendations and as indicated. Coordinate installation of roof perimeter flashing with installation of roof drainage system.

3.10.4 Insulation

Comply with performance requirements and manufacturer's written installation instructions. Install insulation concurrently with metal panel installation, in thickness indicated to cover entire roof and wall area.

3.10.4.1 Straps

Cut straps to length and install in the pattern and spacing indicated on the shop drawings. Tension straps to manufacturer's value.

3.10.4.1.1 Vapor Barrier Fabric

Install vapor barrier fabric in large one piece custom fabricated pieces to substantially fit defined building areas with minimum practical job site sealing. Position pre-folded fabric on the strap platform along on eave purlin. Clamp the two bottom centers at the eave and also centered on the bay. Pull the other end of the pleated-folded fabric across the building width on the strap platform, pausing only at the ridge to fasten the strap and fabric in position were plane of roof changes and to release temporary fasteners on the opposite ridge purlins. Once positioned, install fasteners from the bottom side oat each strap/purlins intersection. Trim edges and seal along the rafters. All seams must be completely sealed - stapled seams are not acceptable.

3.10.5 Roof and Wall Accessories and Specialties

Install roof and wall accessories and specialties complete with necessary hardware, anchors, dampers, weather guards, rain caps, and equipment supports as specified in Division 07 - THERMAL AND MOISTURE PROTECTION, unless otherwise indicated.

3.11 CLEAN-UP AND PROTECTION

3.11.1 Structural Framing

Clean all exposed structural framing at completion of installation. Remove metal shavings, filings, bolts, and wires from work area. Remove grease and oil films, excess sealants, handling marks, contamination from steel wool, fittings and drilling debris and scrub the work clean. Exposed metal surfaces to be free of dents, creases, waves, scratch marks, solder or weld marks, and damage to the finish coating.

3.11.2 Metal Panels

Clean all exposed sheet metal work at completion of installation. Remove metal shavings, filings, nails, bolts, and wires from work area. Remove protective coverings/films, grease and oil films, excess sealants, handling marks, contamination from steel wool, fittings and drilling debris and scrub the work clean. Exposed metal surfaces to be free of dents, creases, waves, scratch marks, solder or weld marks, and damage to the finish coating.

3.11.3 Touch-Up Painting

After erection, promptly clean, prepare, and prime or re-prime field connections, rust spots, and abraded surfaces of prime-painted structural framing and accessories. Clean and touch-up paint as specified in Section 09 90 00 PAINTS AND COATINGS, unless otherwise indicated.

3.12 WASTE MANAGEMENT

Separate waste in accordance with the Waste Management Plan, placing copper materials, ferrous materials, and galvanized sheet metal in designated areas for reuse. Close and seal tightly all partly used adhesives and solvents; store protected in a well-ventilated, fire-safe area at moderate temperature.

Collect and place scrap/waste debris in containers. Promptly dispose of scrap/waste debris. Do not allow scrap/waste debris to accumulate on-site; transport scrap/waste debris from government property and legally dispose of them.

3.13 SPECIAL INSPECTION AND TESTING FOR SEISMIC-RESISTING SYSTEMS

Special inspections and testing for seismic-resisting systems and components shall be done in accordance with Section 01 45 35 SPECIAL INSPECTIONS.

3.14 WARRANTY

3.14.1 MANUFACTURER'S WARRANTY

Submit all manufacturers' signed warranties to Contracting Officer prior to final commissioning and acceptance.

3.14.2 CONTRACTOR'S WARRANTY for INSTALLATION

Submit contractor's warranty for installation to the Contracting Officer prior to final commissioning and acceptance.

-- End of Section --

SECTION 21 13 13.00 20

WET PIPE SPRINKLER SYSTEM, FIRE PROTECTION
04/08

PART 1 GENERAL

1.1 REFERENCES

The publications listed below form a part of this specification to the extent referenced. The publications are referred to within the text by the basic designation only.

ASTM INTERNATIONAL (ASTM)

ASTM D709	(2016) Standard Specification for Laminated Thermosetting Materials

FM GLOBAL (FM)

FM APP GUIDE	(updated on-line) Approval Guide http://www.approvalguide.com/

NATIONAL FIRE PROTECTION ASSOCIATION (NFPA)

NFPA 13	(2016) Standard for the Installation of Sprinkler Systems
NFPA 1963	(2014) Standard for Fire Hose Connections
NFPA 24	(2013) Standard for the Installation of Private Fire Service Mains and Their Appurtenances

UNDERWRITERS LABORATORIES (UL)

UL 668	(2004; Reprint Jul 2016) UL Standard for Safety Hose Valves for Fire-Protection Service
UL Fire Prot Dir	(2015) Fire Protection Equipment Directory

1.2 SYSTEM DESCRIPTION

Design and provide new automatic wet pipe fire extinguishing sprinkler systems for complete fire protection coverage throughout the entire building.

1.3 SPRINKLER SYSTEM DESIGN

Except as modified herein, design automatic wet pipe fire extinguishing sprinkler systems in accordance with the required and advisory provisions of NFPA 13, including all recommendations and advisory portions, which shall be considered mandatory; this includes advisory provisions listed in the appendices of such standard(s), as though the word "shall" had been substituted for the word "should" wherever it appears. Design system by Hydraulic calculations shall assume a12 psi pressure loss for the backflow preventer assembly. Locate sprinklers in a consistent pattern with ceiling grid, lights, and air supply diffusers. Provide sprinklers and

piping system layout. All Devices and equipment for fire protection service shall be UL Fire Prot Dir listed or FM APP GUIDE approved for use in wet pipe sprinkler systems.

1.3.1 Location of Sprinklers

Sprinklers in relation to the ceiling and the spacing of sprinklers shall not exceed that permitted by NFPA 13 for the hazards indicated on the contract drawings. hazard occupancy. Uniformly space sprinklers on the branch piping. Sprinklers shall provide coverage throughout 100 percent of the building. This includes, but is not limited to, telephone rooms, electrical equipment rooms, boiler rooms, switchgear rooms, transformer rooms, and other electrical and mechanical spaces.

1.3.2 Water Distribution

Distribution shall be uniform throughout the area in which the sprinklers will open. Discharge from individual sprinklers in hydraulically most remote area shall be between 100 percent and 120 percent of the specified density.

1.3.3 Density of Application of Water

Size pipe to provide the specified density when the system is discharging the specified total maximum required flow. Application to horizontal surfaces below the sprinklers shall be as indicated on the contract drawings.Size pipe to provide the specified density when the system is discharging the specified total maximum required flow. Application to horizontal surfaces below the sprinklers shall be as indicated on the contract drawings.

1.3.4 Sprinkler Discharge Area

Permissible decreases and required increases from NFPA 13 shall be applied to an initial hydraulically most remote area of 3,000 sq ft.

1.3.5 Outside Hose Allowances

Hydraulic calculations shall include a hose allowance of 250 gpm for outside hose streams for a duration of 60 minutes.

1.3.6 Water Supply

Base hydraulic calculations on the water supply data shown on the fire protection contract drawings

1.4 SUBMITTALS

Government approval is required for submittals with a "G" designation; submittals not having a "G" designation are for Contractor Quality Control approval.

Partial submittals and submittals not fully complying with the requirements and recommended practices of NFPA 13 and this specification section shall be returned disapproved without review. This contract stipulation is non-negotiable.

Submittals with an "S" are for inclusion in the Sustainability Notebook, in conformance to Section 01 33 29 SUSTAINABILITY REPORTING. Submit the following in accordance with Section 01 33 00 SUBMITTAL PROCEDURES:

SD-02 Shop Drawings

Shop Drawings; G

Prepare 24 by 36 inch detail working drawings of sprinklers and piping. Floor plans shall be drawn to a scale not less than 1/8" = 1'-0". Show data essential for proper installation of each system. Show details, plan view, elevations and sections of the systems supply and piping. Show piping schematic of systems supply, devices, valves, pipe and fittings. Show point to point electrical wiring diagrams. Submit drawings signed by a registered fire protection engineer. Provide three copies of the Sprinkler System Shop Drawings, no later than 21 days prior to the start of sprinkler system installation.

SD-03 Product Data

Pipe; G
Fittings; G

Valves, including gate, check, and globe; G

Sprinklers; G
Pipe hangers and supports; G
Sprinkler Alarm Switches; G
Fire department connections; G
Mechanical couplings; G
Backflow Prevention Assembly; G
Hydraulic Calculations ; G

Annotate descriptive data to show the specific model, type, and size of each item. Catalog cuts shall also indicate UL Listing/FM Approval and country of manufacture.

SD-05 Design Data

Hydraulic Calculations; G

Submit computer program generated hydraulic calculations to substantiate compliance with hydraulic design requirements. Calculations shall be performed by computer using software intended specifically for fire protection system design. Calculations shall include isometric diagram indicating hydraulic nodes and pipe segments.Submit name of software program used.

SD-06 Test Reports

request to schedule Preliminary Tests; G

Preliminary Test Report; G

Provide Three copies of the completed Preliminary Test Report, no later than 7 days after the completion of the Preliminary Tests. The Preliminary Tests Report shall include both the Contractor's Material and Test Certificate for Underground Piping and the

Contractor's Material and Test Certificate for Aboveground Piping. All items in the Preliminary Tests Report shall be signed by the Fire Protection Engineer.

request to schedule Final Acceptance Test; G

Final Acceptance Test Report; G

Provide Three copies of the completed Final Acceptance Tests Reports, no later than 7 days after the completion of the Final Acceptance Tests. All items in the Final Acceptance Report shall be signed by the Fire Protection Engineer.

SD-07 Certificates

Inspection by Fire Protection Engineer; G

Concurrent with the Final Acceptance Test Report, certification by the Fire Protection Engineer that the sprinkler system is installed in accordance with the contract requirements, including signed approval of the Preliminary and Final Acceptance Test Reports.

Fire Protection Engineer; G

The name and documentation of certification of the proposed Fire Protection Engineer, no later than 14 days after the Notice to Proceed and prior to the submittal of the sprinkler system drawings and hydraulic calculations.

Sprinkler System Installer; G

Submit data showing the Sprinkler System Installer has successfully installed systems of the same type and design as specified herein, Data shall include names and locations of at least two installations where the Contractor, or the subcontractor referred to above, has installed such systems. Indicate type and design of each system and certify that each system has performed satisfactorily in the manner intended for not less than 18 months. Provide NICET certification of the system technician. Contractor shall submit data along with submittal of the Fire Protection Engineer Qualifications.

SD-10 Operation and Maintenance Data

Operating and Maintenance Instructions

Submit in accordance with Section 01 78 23 OPERATION AND MAINTENANCE DATA as supplemented and modifies by this specification section.

Provide six manuals in accordance with NFPA 13. The manuals shall include the manufacturer's name, model number, parts list, list of parts and tools that should be kept in stock by the owner for routine maintenance including the name of a local supplier, simplified wiring and controls diagrams, troubleshooting guide, and recommended service organization (including address and telephone number) for each item of equipment. Each service organization submitted shall be capable of providing 4 hour

on-site response to a service call on an emergency basis.

SD-11 Closeout Submittals

As-built drawings

As-built shop drawings, at no later than 14 days after completion of the Final Tests. The Sprinkler System Drawings shall be updated to reflect as-built conditions after all related work is completed. Provide electronic drawings in dwg or pdf format.

On-site training

1.5 QUALIFICATIONS

1.5.1 Fire Protection Engineer

A Fire Protection Engineer is a registered professional engineer (P.E.) who has passed the fire protection engineering written examination administered by the National Council of Examiners for Engineering and Surveys (NCEES)

1.5.2 Sprinkler System Installer

The Sprinkler System Installer shall be regularly engaged in the installation of the type and complexity of system specified in the Contract documents, and shall have served in a similar capacity for at least three systems that have performed in the manner intended for a period of not less than 6 months. Installation drawings, shop drawings and as-built drawings shall be prepared, by or under the supervision of, an system technician who is experienced with the types of works specified herein, and is currently certified by the National Institute for Certification in Engineering Technologies (NICET) as an engineering technician with minimum Level III certification in Automatic Sprinkler System program or by a fire protection engineer.

1.6 QUALITY ASSURANCE

1.6.1 Material and Equipment Qualifications

Provide materials and equipment that are standard products of manufacturers regularly engaged in the manufacture of such products, which are of a similar material, design and workmanship. Standard products shall have been in satisfactory commercial or industrial use for 2 years prior to bid opening. The 2-year use shall include applications of equipment and materials under similar circumstances and of similar size. The product shall have been for sale on the commercial market through advertisements, manufacturers' catalogs, or brochures during the 2 year period.

1.6.2 Alternative Qualifications

Products having less than a two-year field service record will be acceptable if a certified record of satisfactory field operation for not less than 6000 hours, exclusive of the manufacturer's factory or laboratory tests, can be shown.

1.6.3 Manufacturer's Nameplate

Each item of equipment shall have a nameplate bearing the manufacturer's name, address, model number, and serial number securely affixed in a conspicuous place; the nameplate of the distributing agent will not be acceptable.

1.6.4 Field Fabricated Nameplates

ASTM D709. Provide laminated plastic nameplates for each equipment enclosure, relay, switch, and device; as specified in the technical sections or as indicated on the drawings. Each nameplate inscription shall identify the function and, when applicable, the position. Nameplates shall be melamine plastic, 0.125 inch thick, white with black center core. Surface shall be matte finish. Corners shall be square. Accurately align lettering and engrave into the core. Minimum size of nameplates shall be one by 2.5 inches. Lettering shall be a minimum of 0.25 inch high normal block style.

1.7 ACCESSIBILITY

Install all work so that parts requiring periodic inspection, operation, maintenance, and repair are readily accessible. Install concealed valves, expansion joints, controls, dampers, and equipment requiring access, in locations freely accessible through access doors.

1.8 DELIVERY, STORAGE AND HANDLING

All equipment delivered and placed in storage shall be housed in a manner to preclude any damage from the weather, humidity and temperature variations, dirt and dust, or other contaminants. Additionally, all pipes shall either be capped or plugged until installed.

PART 2 PRODUCTS

2.1 UNDERGROUND PIPING COMPONENTS

2.1.1 Pipe

Pipe shall comply with NFPA 24. Minimum pipe size shall be 6 inches. Piping more than 5 feet outside the building walls shall comply with Section 33 11 00 WATER UTILITY DISTRIBUTION PIPING.

2.1.2 Valve Boxes

Except where indicator posts are provided, for each buried valve, provide cast-iron, ductile-iron, or plastic valve box of a suitable size. Plastic boxes shall be constructed of acrylonitrile-butadiene-styrene (ABS) or inorganic fiber-reinforced black polyolefin. Provide cast-iron, ductile-iron, or plastic cover for valve box with the word "WATER" cast on the cover. The minimum box shaft diameter shall be 5.25 inches. Coat cast-iron and ductile-iron boxes with bituminous paint applied to a minimum dry-film thickness of 10 mils.

2.1.3 Buried Utility Warning and Identification Tape

Provide detectable aluminum foil plastic backed tape or detectable magnetic plastic tape manufactured specifically for warning and identification of buried piping. Tape shall be detectable by an

electronic detection instrument. Provide tape in rolls, 3 inches minimum width, color coded for the utility involved with warning and identification imprinted in bold block letters continuously and repeatedly over the entire tape length. Warning and identification shall read "CAUTION BURIED WATER PIPING BELOW" or similar wording. Use permanent code and letter coloring unaffected by moisture and other substances contained in trench backfill material.

2.2 ABOVEGROUND PIPING COMPONENTS

All components of the aboveground piping shall fully comply with the requirements and recommended practices of NFPA 13 and this specification section. Aboveground piping shall be steel .

2.2.1 Steel Pipe

Pipe shall be rigidblack steel. Steel piping shall be Schedule or 40 for sizes less than 8 inches and Schedule 10 or 30 for sizes 8 inches or larger. Fittings into which sprinklers, sprinkler riser nipples, or drop nipples are threaded shall be welded, threaded, or grooved-end type. Plain-end fittings with mechanical couplings, fittings that use steel gripping devices to bite into the pipe and segmented welded fittings shall not be permitted. Rubber gasketed grooved-end pipe and fittings with mechanical couplings shall be permitted in pipe sizes 1.5 inches and larger. Fittings, mechanical couplings, and rubber gaskets shall be supplied by the same manufacturer. Steel piping with wall thickness less than Schedule 30 shall not be threaded. Side outlet tees using rubber gasketed fittings shall not be permitted.Sprinkler pipe and fittings shall be metal.

2.2.2 Grooved Mechanical Joints and Fittings

Grooved couplings, fittings and grooving tools shall be products of the same manufacturer.

2.2.3 Flexible Sprinkler Hose

The use of flexible sprinkler hose is NOT permissible.

2.2.4 Sprinklers

Provide nominal 0.50 inch or 0.53 inch orifice sprinklers. Sprinklers with internal O-rings shall not be used. Sprinklers shall be used in accordance with their listed coverage limitations. Ceiling level sprinklers in the open bay/training room of P1481 will be residential type sprinklers. See 21 21 00 FIRE EXTINGUISHING SPRINKLER SYSTEMS (RESIDENTIAL). The sprinklers in areas with finished ceilings areas shall be concealed, quick response type sprinklers with white escutcheons and cover plates. Sprinklers shall have a brass finish. Temperature classification shall be ordinary. Sprinklers in high heat areas including attic spaces or in close proximity to unit heaters shall have temperature classification in accordance with NFPA 13. Extended coverage sprinklers shall not be used. Provide corrosion-resistant sprinklers and sprinkler guards as required by NFPA 13. Deflector shall not be more than 3 inches below suspended ceilings. Ceiling plates shall not be more than 0.5 inch deep. Ceiling cups shall not be permitted.

2.2.5 Valves

Provide valves of types approved for fire service. Valves shall open by counterclockwise rotation. Provide an OS&Y valve beneath each alarm. Check valves shall be clear opening swing-check type with inspection and access cover plate for sizes 8 inches and larger. Each control valve shall be electrically supervised; minimum contact ratings shall be 2.5 amps at 24 volts DC. Provide supervision against valve closure or tampering of valve.

2.2.6 Pipe Supports

Provide Pipe hangers and supports in accordance with NFPA 13.

2.2.7 Fire Department Connections

Fire department connection shall be projecting type with cast brass body, matching wall escutcheon lettered "Auto Spkr" with a polished brass finish. The connection shall have two inlets with individual self-closing clappers, caps with drip drains and chains. Female inlets shall have 2-1/2 inch diameter American National Fire Hose Connection Screw Threads (NH) per NFPA 1963. The fire department connection shall be outfitted with a 5" Storz connector.

2.2.8 Backflow Prevention Assembly

Provide listed reduced pressure principle valve assembly backflow preventer. Each check valve shall have a drain. Backflow prevention assemblies shall have current "Certificate of Approval from the Foundation for Cross-Connection Control and Hydraulic Research, FCCCHR List. Listing of the specific make, model, design, and size in the FCCCHR List shall be acceptable as the required documentation."

2.3 ALARM INITIATING AND SUPERVISORY DEVICES

2.3.1 Sprinkler Alarm Switches

Provide vane type flow switch(es) with circuit opener or closer for the automatic transmittal of an alarm over the facility fire alarm system. Connection of switch shall be under Section 28 31 76.00 22 INTERIOR COMBINATION EMERGENCY COMMUNICATIONS SYSTEMSVane type Alarm actuating devices shall have mechanical diaphragm controlled retard device adjustable from 10 to 60 seconds and shall instantly recycle.

2.3.2 Valve Supervisory (Tamper) Switch

Switch shall be suitable for mounting to the type of control valve to be supervised open. The switch shall be tamper resistant and contain one set of SPDT (Form C) contacts arranged to transfer upon removal of the housing cover or closure of the valve of more than two rotations of the valve stem.

2.4 ACCESSORIES

2.4.1 Sprinkler Cabinet

Provide metal cabinet with extra sprinklers and sprinkler wrench adjacent to each alarm valve. The number and types of extra sprinklers shall be as specified in NFPA 13.

2.4.2 Pipe Escutcheon

Provide split hinge metal plates for piping entering walls, floors, and ceilings in exposed spaces. Provide polished stainless steel plates or chromium-plated finish on copper alloy plates in finished spaces. Provide paint finish on metal plates in unfinished spaces.

PART 3 EXECUTION

3.1 INSPECTION BY FIRE PROTECTION ENGINEER

The Fire Protection Engineer shall inspect the sprinkler system periodically during the installation to assure the sprinkler system is being provided and installed in accordance with the contract requirements and the approved sprinkler system submittal(s). The Fire Protection Engineer shall attend both the preliminary and final tests, and shall sign the test results. After the preliminary testing has been completed, the Fire Protection Engineer, shall certify in writing the system is ready for the final inspections and tests. This report shall document any discrepancies found and what actions will be taken to correct. Any discrepancy noted during the periodic site visits or the preliminary testing shall be brought to the attention of the Contracting Officer in writing, no later than three working days after the discrepancy is discovered.

3.2 UNDERGROUND PIPING INSTALLATION

The methods of fabrication and installation of the underground piping shall fully comply with the requirements and recommended practices of NFPA 13, NFPA 24 and the contract drawings.

3.3 ABOVEGROUND PIPING INSTALLATION

The methods of fabrication and installation of the aboveground piping shall fully comply with the requirements and recommended practices of NFPA 13 and this specification section.

3.3.1 Piping in Finished Areas

In areas with suspended or dropped ceilings and in areas with concealed spaces above the ceiling, piping shall be concealed above ceilings. Piping shall be inspected, tested and approved before being concealed. Risers and similar vertical runs of piping in finished areas shall be concealed.

3.3.2 Pendent Sprinklers

Where sprinklers are installed below suspended or dropped ceilings, drop nipples shall be cut such that sprinkler ceiling plates or escutcheons are of a uniform depth throughout the finished space. The outlet of the reducing coupling shall not extend more than 1 inch below the underside of the ceiling. Pendent sprinklers in suspended ceilings shall be a minimum of 6 inches from ceiling grids.

3.3.3 Reducers

Reductions in pipe sizes shall be made with one-piece tapered reducing fittings. Bushings are prohibited.

3.3.4 Pipe Penetrations

Cutting structural members for passage of pipes or for pipe-hanger fastenings will not be permitted. Pipes that must penetrate concrete or masonry walls or concrete floors shall be core-drilled and provided with pipe sleeves. Each sleeve shall be Schedule 40 galvanized steel, ductile iron or cast iron pipe and shall extend through its respective wall or floor and be cut flush with each wall surface. Sleeves shall provide required clearance between the pipe and the sleeve per NFPA 13. The space between the sleeve and the pipe shall be firmly packed with mineral wool insulation. Where pipes penetrate fire walls, fire partitions, or floors, pipes shall be fire stopped in accordance with Section 07 84 00 FIRESTOPPING. In penetrations that are not fire-rated or not a floor penetration, the space between the sleeve and the pipe shall be sealed at both ends with plastic waterproof cement that will dry to a firm but pliable mass or with a mechanically adjustable segmented elastomer seal.

3.3.5 Inspector's Test Connection

Provide test connections approximately 6 feet above the floor for each sprinkler system or portion of each sprinkler system equipped with an alarm device. Provide test connection piping to a drain location that can accept full flow where the discharge will be readily visible and where water may be discharged without property damage. Discharge to floor drains, janitor sinks or similar fixtures shall not be permitted. Provide discharge orifice of same size as corresponding sprinkler orifice. The penetration of the exterior wall shall be no greater than 2 feet above finished grade.

3.3.6 Backflow Preventer Test Connection

Provide downstream of the backflow prevention assembly UL 668 hose valves with 2.5 inch National Standard male hose threads with cap and chain. Provide one valve for each 250 gpm of system demand or fraction thereof. Provide a permanent sign in accordance with paragraph entitled "Identification Signs" which reads, "Test Valve."

3.3.7 Drains

Main drain piping shall be provided to discharge at a safe point outside the building. Auxiliary drains shall be provided as required by NFPA 13.

3.3.8 Installation of Fire Department Connection

Connection shall be mounted on the exterior wall approximately 3 feet above finished grade. The piping between the connection and the check valve shall be provided with an automatic drip in accordance with NFPA 13 and arranged to drain to the outside.

3.3.9 Identification Signs

Signs shall be affixed to each control valve, inspector test valve, main drain, auxiliary drain, test valve, and similar valves as appropriate or as required by NFPA 13. Valve identification signs shall be minimum 6 inches wide by 2 inches high with enamel baked finish on minimum 18 gauge steel or 0.024 inch aluminum with red letters on a white background or white letters on red background. Hydraulic design data nameplates shall be permanently affixed to each sprinkler riser as specified in NFPA 13.

3.4 ELECTRICAL WORK

Except as supplemented and modified herein, electric equipment and wiring shall be in accordance with Section 26 20 00 INTERIOR DISTRIBUTION SYSTEM. Alarm signal wiring connected to the building fire alarm control system shall be in accordance with 28 31 76.00 22 INTERIOR COMBINATION EMERGENCY COMMUNICATIONS SYSTEMS

3.5 PIPE PAINTING AND COLOR CODE MARKING

Paint and color code mark sprinkler piping system as specified in Section 09 90 00 PAINTS AND COATINGS.

3.6 PRELIMINARY TESTS

The system, including the underground water mains, and the aboveground piping and system components, shall be tested to assure that equipment and components function as intended. The underground and aboveground interior piping systems and attached appurtenances subjected to system working pressure shall be tested in accordance with NFPA 13 and NFPA 24. Submit request to schedule Preliminary Tests, no later than 14 days prior to the proposed start of the tests. Upon completion of specified tests, the Contractor shall submit for approval a Preliminary Test Report.

3.6.1 Underground Piping

3.6.1.1 Flushing

Underground piping shall be flushed in accordance with NFPA 24.

3.6.1.2 Hydrostatic Testing

New underground piping shall be hydrostatically tested in accordance with NFPA 24.

3.6.2 Aboveground Piping

3.6.2.1 Hydrostatic Testing

Aboveground piping shall be hydrostatically tested in accordance with NFPA 13.

3.6.2.2 Backflow Prevention Assembly Forward Flow Test

Each backflow prevention assembly shall be tested at system flow demand, including all applicable hose streams, as specified in NFPA 13. The Contractor shall provide all equipment and instruments necessary to conduct a complete forward flow test, including 2.5 inch diameter hoses, playpipe nozzles, calibrated pressure gauges, and pitot tube gauge. The Contractor shall provide all necessary supports to safely secure hoses and nozzles during the test. At the system demand flow, the pressure readings and pressure drop (friction) across the assembly shall be recorded. A metal placard shall be provided on the backflow prevention assembly that lists the pressure readings both upstream and downstream of the assembly, total pressure drop, and the system test flow rate determined during the preliminary testing. The pressure drop shall be compared to the manufacturer's data and the readings observed during the final inspections and tests.

3.7 FINAL ACCEPTANCE TEST

Final Acceptance Test shall begin only when the Preliminary Test Report has been approved. Submit request to schedule Final Acceptance Test, no later than 14 days prior to the proposed start of the tests. Notification shall include a copy of the Contractor's Material & Test Certificates.

This shall include operation of control valves and flowing of inspector's test connections to verify operation of associated waterflow alarm switches. After operation of control valves has been completed, the main drain test shall be repeated to assure that control valves are in the open position. In addition, the representative shall have available copies of as-built drawings and certificates of tests previously conducted. The installation shall not be considered accepted until identified discrepancies have been corrected and test documentation is properly completed and received. The Contractor shall submit the Final Acceptance Test Report as specified in the Submittals paragraph.

An experienced technician regularly employed by the system installer shall be present during the inspection. The Fire Protection Engineer shall attend the final inspections and tests. At this inspection, repeat any or all of the required tests as directed. Correct defects in work provided by the Contractor, and make additional tests until the systems comply with contract requirements. Furnish appliances, equipment, electricity, instruments, connecting devices, and personnel for the tests. The Government will furnish water for the tests. The MIDLANT Division, Naval Facilities Engineering Command, Fire Protection Engineer, will witness formal tests and approve systems before they are accepted.

3.8 ON-SITE TRAINING

Submit request to schedule the On-site Training, at least 14 days prior to the start of related training but prior to the final inspections and tests. The sprinkler contractor shall conduct a training course for operating and maintenance personnel as designated by the Contracting Officer. Training shall be provided for a period of 4 hours of normal working time and shall start after the system is functionally complete and after the Final Acceptance Test. The On-Site Training shall cover all of the items contained in the approved Operating and Maintenance Instructions.

-- End of Section --

SECTION 21 21 00

FIRE EXTINGUISHING SPRINKLER SYSTEMS (RESIDENTIAL)
04/06

PART 1 GENERAL

1.1 REFERENCES

The publications listed below form a part of this specification to the extent referenced. The publications are referred to within the text by the basic designation only.

FM GLOBAL (FM)

FM APP GUIDE	(updated on-line) Approval Guide http://www.approvalguide.com/

FOUNDATION FOR CROSS-CONNECTION CONTROL AND HYDRAULIC RESEARCH (FCCCHR)

FCCCHR List	(continuously updated) List of Approved Backflow Prevention Assemblies

NATIONAL FIRE PROTECTION ASSOCIATION (NFPA)

NFPA 13	(2016) Standard for the Installation of Sprinkler Systems
NFPA 13D	(2013) Standard for the Installation of Sprinkler Systems in One- and Two-Family Dwellings and Manufactured Homes
NFPA 24	(2013) Standard for the Installation of Private Fire Service Mains and Their Appurtenances

UNDERWRITERS LABORATORIES (UL)

UL 262	(2004; Reprint Oct 2011) Gate Valves for Fire-Protection Service
UL Fire Prot Dir	(2015) Fire Protection Equipment Directory

1.2 SYSTEM DESCRIPTION

Design and provide new automatic wet pipe fire extinguishing sprinkler systems for complete fire protection coverage throughout the building, except sprinklers may be omitted from areas as allowed by NFPA 13D.

1.3 SPRINKLER SYSTEM DESIGN

Design automatic wet pipe fire extinguishing sprinkler systems in accordance with the required and advisory provisions of NFPA 13D by hydraulic calculations, except as modified herein. Each system shall include materials, accessories, and equipment inside and outside the building to provide each system complete and ready for use. Design and provide each system to give full consideration to blind spaces, piping,

electrical equipment, ducts, and other construction and equipment in accordance with detailed working drawings to be submitted for approval. Locate sprinklers in a consistent pattern with ceiling grid, lights, and air supply diffusers. Provide sprinklers and piping system layout. Devices and equipment for fire protection service shall be UL Fire Prot Dir listed or FM APP GUIDE approved for use in wet pipe sprinkler systems.

1.3.1 Location of Sprinklers

Location of sprinklers in relation to the ceiling/wall and the spacing of sprinklers shall comply with that permitted by NFPA 13D.

1.3.2 Design Discharge

Discharge shall be at least 18 gpm from any single sprinkler and not less than 13 gpm per sprinkler for the number of sprinklers required.

1.3.3 Number of Design Sprinklers

The number of design sprinklers shall include sprinklers within a compartment to a maximum of two for an NFPA 13D system.

1.3.4 Friction Losses

Calculate losses in piping in accordance with the Hazen-Williams formula with 'C' value of 120 for steel piping, 150 for copper tubing, and 150 for plastic piping, except that friction loss may be based upon available manufacturer's data for specially listed piping products.

1.3.5 Detail Working Plan Drawings

Prepare 24 by 36 inch detail working plan drawings of sprinklers and piping system layout in accordance with NFPA 13D. Show data essential for proper installation of each system. Show details, plan view, elevations, and sections of the systems supply and piping. Show piping schematic of systems supply, devices, valves, pipe, and fittings. Show point to point electrical wiring diagrams. Submit working plan drawings signed by a Registered Fire Protection Engineer.

1.3.6 As-Built Drawings

After completion, but before final acceptance, submit complete set of as-built drawings of each system for record purposes. Submit 24 by 36 inch drawings on reproducible mylar film with title block similar to full size contract drawings. Furnish the as-built (record) working drawings in addition to as-built contract drawings required by Division 1, "General Requirements."

1.4 SUBMITTALS

Government approval is required for submittals with a "G" designation; submittals not having a "G" designation are for Contractor Quality Control approval. Submit the following in accordance with Section 01 33 00 SUBMITTAL PROCEDURES:

The MID-ATLANTIC Division, Naval Facilities Engineering Command, Fire Protection Engineer, will review and approve submittals in this section requiring Government approval.

SD-02 Shop Drawings

Sprinklers and piping system layout; G

Electrical wiring diagrams; G

SD-03 Product Data

Piping; G
Valves, including gate, check, and globe; G
Sprinklers; G
Pipe hangers and supports; G
Backflow prevention assemblies; G
Annotate descriptive data to show the specific model, type, and size of each item.

SD-05 Design Data

Sprinkler system design; G

Submit computer program generated hydraulic calculations to substantiate compliance with hydraulic design requirements. Submit name of software program used.

SD-06 Test Reports

Preliminary tests on piping system; G

SD-07 Certificates

Qualifications of installer; G

SD-10 Operation and Maintenance Data

Submit in accordance with Section 01 78 23 OPERATION AND MAINTENANCE DATA.

SD-11 Closeout Submittals

As-built drawings of each system; G

1.5 QUALITY ASSURANCE

1.5.1 Qualifications of Installer

Prior to installation, submit data showing that the Contractor has successfully installed systems of the same type and design as specified herein, or that Contractor has a firm contractual agreement with a subcontractor having such required experience. Data shall include names and locations of at least two installations where the Contractor, or the subcontractor referred to above, has installed such systems. Indicate type and design of each system and certify that each system has performed satisfactorily in the manner intended for not less than 18 months.

Qualifications of System Technician: Installation drawings, shop drawings, and as-built drawings shall be prepared, by or under the supervision of, an individual who is experienced with the types of work specified herein, and is currently certified by the National Institute for Certification in Engineering Technologies (NICET) as an engineering

technician with minimum Level-III certification in the automatic sprinkler system program. The Contractor shall submit data for approval showing the name and certification of involved individuals with such qualifications at or prior to submittal of drawings.

PART 2 PRODUCTS

2.1 ABOVEGROUND PIPING SYSTEMS

Provide fittings for changes in direction of piping and for connections. Make changes in piping sizes through tapered reducing pipe fittings; bushings shall not be permitted. Perform welding in the shop; field welding shall not be permitted. Conceal piping in all finished spaces.

2.1.1 Sprinkler Piping

Utilize NFPA 13D, except as modified herein. Steel piping shall be Schedule 40 for sizes less than 2.5 inches, and Schedule 10 or 40 for sizes 2.5 to 8 inches, and Schedule 10 for sizes 8 inches and larger. Fittings into which sprinklers, sprinkler riser nipples, or drop nipples are threaded shall be welded, threaded, or grooved-end type. Plain-end fittings with mechanical couplings and fittings which use steel gripping devices to bite into the pipe when pressure is applied shall not be permitted. Rubber gasketed grooved-end pipe and fittings with mechanical couplings shall be permitted in pipe sizes 1.5 inches and larger. Fittings shall be UL Fire Prot Dir listed or FM APP GUIDEapproved for use in wet pipe sprinkler systems. Fittings, mechanical couplings, and rubber gaskets shall be supplied by the same manufacturer. Steel piping with wall thickness less than Schedule 40 shall not be threaded. Side outlet tees using rubber gasketed fittings shall not be permitted.

2.1.2 Sprinklers

Release element of each sprinkler shall be of the ordinary temperature rating or higher as suitable for the specific application. Provide white escutcheons and white, poly coated flush concealed type sprinklers for the ceilings. Provide UL listed residential sprinklers in accordance with NFPA 13D. No o-rings will be permitted in sprinklers.

2.1.3 Pipe Hangers and Supports

Provide in accordance with NFPA 13D .

2.1.4 Valves

NFPA 13D. Provide indicating valves of types listed for fire service. Gate valves shall open by counterclockwise rotation. Check valves shall be flanged clear opening swing-check type with flanged inspection and access cover plate for sizes 2.5 inches and larger. Provide a single control valve arranged to shut off the domestic water and the sprinkler system and a separate shutoff valve for domestic water only.

2.1.5 Identification Signs

NFPA 13D. Attach properly lettered and approved metal signs to each valve and alarm device. Permanently affix hydraulic design data nameplates to the riser of each system.

2.1.6 Backflow Prevention Assemblies

Provide reduced pressure principle type backflow prevention assemblies which are approved by and have a current "Certificate of Approval" from the FCCCHR List. Listing of the particular make, model and design, and size in the FCCCHR List shall be acceptable as the required proof.

2.1.7 Inspector's Test Connection

Provide test connections approximately 6 feet above the floor for each sprinkler system or portion of each sprinkler system equipped with an alarm device; locate at the hydraulically most remote part of each system. Provide test connection piping to a location where the discharge shall be readily visible and where water may be discharged without property damage. Provide discharge orifice of same size as corresponding sprinkler orifice.

2.1.8 Main Drains

Provide separate drain piping to discharge at safe points outside each building or to sight glasses attached to drains of adequate size to readily receive the full flow from each drain under maximum pressure. The discharge shall be readily visible and shall flow to a location that will not cause property damage. Provide auxiliary drains as required by NFPA 13D.

2.2 BURIED WATER PIPING SYSTEMS

2.2.1 Pipe and Fittings

NFPA 13D. Provide polyvinyl chloride (PVC) piping, chlorinated polyvinyl chloride (CPVC) piping, or Type K copper tubing. Provide a dielectric union between copper piping and any metal piping. Minimum pipe size shall be 1.25 inches. Minimum depth of cover shall be 3 feet at finish grade.

2.2.2 Valves

Provide as required by NFPA 24. Control valves shall conform to UL 262 and shall open by counterclockwise rotation.

2.2.3 Valve Boxes

Except where indicator posts are provided, for each buried valve, provide cast-iron, ductile-iron, or plastic valve box of a suitable size. Plastic boxes shall be constructed of acrylonitrile-butadiene-styrene (ABS) or inorganic fiber-reinforced black polyolefin. Provide cast-iron, ductile-iron, or plastic cover for valve box with the word "WATER" cast on the cover. The minimum box shaft diameter shall be 5.25 inches. Coat cast-iron and ductile-iron boxes with bituminous paint applied to a minimum dry film thickness of 10 mils.

2.2.4 Buried Utility Warning and Identification Tape

Provide detectable aluminum foil plastic backed tape or detectable magnetic plastic tape manufactured specifically for warning and identification of buried piping. Tape shall be detectable by an electronic detection instrument. Provide tape in rolls, 3 inches minimum width, color coded for the utility involved with warning and identification imprinted in bold black letters continuously and repeatedly over entire tape length. Warning and identification shall read "CAUTION BURIED WATER PIPING BELOW" or similar wording. Use permanent code and

letter coloring unaffected by moisture and other substances contained in trench backfill material.

2.3 PIPE SLEEVES

Provide where piping passes entirely through walls, ceilings, roofs, and floors. Secure sleeves in position and location during construction. Provide sleeves of sufficient length to pass through entire thickness of walls, ceilings, roofs, and floors. Provide one inch minimum clearance between exterior of piping and interior of sleeve or core-drilled hole. Firmly pack space with mineral wool insulation. In fire walls and fire floors, seal both ends of pipe sleeves or core-drilled holes with UL listed fill, void, or cavity material.

2.3.1 Sleeves in Masonry and Concrete

Provide steel pipe sleeves or Schedule 40 PVC plastic pipe sleeves. Core drilling of masonry and concrete may be provided in lieu of pipe sleeves when cavities in the core-drilled hole are completely grouted smooth. Provide an annular clearance around the sprinkler riser where it passes through the concrete slab in accordance with NFPA 13.

2.3.2 Sleeves Not in Masonry and Concrete

Provide 26 gage galvanized steel sheet or PVC plastic pipe sleeves.

2.4 ESCUTCHEON PLATES

Provide one piece or split hinge metal plates for piping entering floors, walls, and ceilings in exposed spaces. Provide paint finish on metal plates in finished spaces to match the color of the surrounding area.

PART 3 EXECUTION

3.1 INSTALLATION

Installation, workmanship, fabrication, assembly, erection, examination, inspection, and testing shall be in accordance with NFPA 13D and NFPA 13, except as modified herein. Install piping straight and true to bear evenly on hangers and supports. Do not hang piping from plaster ceilings. Keep the interior and ends of new piping and existing piping affected by Contractor's operations thoroughly cleaned of water and foreign matter. Keep piping systems clean during installation by means of plugs or other approved methods. When work is not in progress, securely close open ends of piping to prevent entry of water and foreign matter. Inspect piping before placing into position. Provide Teflon based pipe thread sealant or Teflon tape on male pipe threads only.

3.1.1 Electrical Work

Provide electrical work associated with this section under Section 26 20 00 INTERIOR DISTRIBUTION SYSTEM, except for fire alarm wiring.

3.2 FIELD PAINTING

Clean, pretreat, prime, and paint new fire extinguishing sprinkler systems including valves, steel piping, conduit, and accessories. Apply coatings to clean, dry surfaces, using clean brushes. Clean the surfaces to remove dust, dirt, rust, and loose mill scale. Immediately after cleaning,

provide the metal surfaces with one coat of pretreatment primer applied to a minimum dry film thickness of 0.3 mil, and one coat of zinc molybdate primer applied to a minimum dry film thickness of 1.0 mil. Shield sprinklers with protective covering while painting is in progress. Upon completion of painting, remove protective covering from sprinklers. Remove sprinklers which have been painted and replace with new sprinklers. Provide primed surfaces with the following:

3.2.1 Piping in Unfinished Areas

Provide primed surfaces with one coat of red alkyd gloss enamel applied to a minimum dry film thickness of 1.0 mil in attic spaces, spaces above suspended ceilings, crawl spaces, pipe chases, mechanical equipment room, and spaces where walls or ceiling are not painted or not constructed of a prefinished material.

3.2.2 Piping in Finished Areas

Provide primed surfaces with two coats of paint to match adjacent surfaces, except provide valves and operating accessories with one coat of red alkyd gloss enamel applied to a minimum dry film thickness of 1.0 mil. Provide piping with 2 inch wide red enamel bands or self-adhering red plastic bands spaced at maximum of 20 foot intervals throughout the piping systems.

3.3 FIELD QUALITY CONTROL

Perform test to determine compliance with specified requirements in the presence of the Contracting Officer. Test, inspect, and approve piping before covering or concealing.

3.3.1 Preliminary Tests

Flush piping with potable water in accordance with NFPA 13D. Piping above suspended ceilings shall be tested, inspected, and approved before installation of ceilings. Test the alarms and other devices. Test the water flow alarms by flowing water through the inspector's test connection. When tests have been completed and corrections made, submit a signed and dated certificate, similar to that specified in NFPA 13D.

3.3.2 Formal Tests and Inspections

Do not submit a request for formal test and inspection until the preliminary test and corrections are completed and approved. Submit a written request for formal inspection at least 15 working days prior to inspection date. An experienced technician regularly employed by the system installer shall be present during the inspection. At this inspection, repeat any or all of the required tests as directed. Correct defects in work provided by the Contractor, and make additional tests until the systems comply with contract requirements. Furnish appliances, equipment, instruments, connecting devices, and personnel for the tests. The Government will furnish water for the tests.

The MIDLANT Division, Naval Facilities Engineering Command, Fire Protection Engineer, will witness formal tests and approve systems before systems are accepted.

-- End of Section --

THIS PAGE HAS BEEN INTENTIONALLY LEFT BLANK

SECTION 22 00 00

PLUMBING, GENERAL PURPOSE
11/15

PART 1 GENERAL

1.1 REFERENCES

The publications listed below form a part of this specification to the extent referenced. The publications are referred to within the text by the basic designation only.

AMERICAN WATER WORKS ASSOCIATION (AWWA)

AWWA B300	(2010; Addenda 2011) Hypochlorites
AWWA B301	(2010) Liquid Chlorine

AMERICAN WELDING SOCIETY (AWS)

AWS A5.8/A5.8M	(2011; Amendment 2012) Specification for Filler Metals for Brazing and Braze Welding
AWS B2.2/B2.2M	(2010) Specification for Brazing Procedure and Performance Qualification

AMERICAN SOCIETY OF MECHANICAL ENGINEERS (ASME)

ASME B1.20.1	(2013; R 2018) Pipe Threads, General Purpose (Inch)
ASME B16.21	(2011) Nonmetallic Flat Gaskets for Pipe Flanges
ASME B16.23	(2011) Cast Copper Alloy Solder Joint Drainage Fittings - DWV
ASME B16.29	(2012) Wrought Copper and Wrought Copper Alloy Solder Joint Drainage Fittings - DWV
ASME B16.50	(2013) Wrought Copper and Copper Alloy Braze-Joint Pressure Fittings
ASME B31.5	(2016) Refrigeration Piping and Heat Transfer Components

ASTM INTERNATIONAL (ASTM)

ASTM B306	(2013) Standard Specification for Copper Drainage Tube (DWV)
ASTM B32	(2008; R 2014) Standard Specification for Solder Metal
ASTM B370	(2012) Standard Specification for Copper Sheet and Strip for Building Construction

ASTM B813	(2016) Standard Specification for Liquid and Paste Fluxes for Soldering of Copper and Copper Alloy Tube
ASTM B88	(2016) Standard Specification for Seamless Copper Water Tube
ASTM C920	(2014a) Standard Specification for Elastomeric Joint Sealants
ASTM D2822/D2822M	(2005; R 2011; E 2011) Asphalt Roof Cement
ASTM D3139	(1998; R 2011) Joints for Plastic Pressure Pipes Using Flexible Elastomeric Seals
ASTM D3212	(2007; R 2013) Standard Specification for Joints for Drain and Sewer Plastic Pipes Using Flexible Elastomeric Seals
ASTM F477	(2014) Standard Specification for Elastomeric Seals (Gaskets) for Joining Plastic Pipe

COPPER DEVELOPMENT ASSOCIATION (CDA)

CDA A4015	(2010) Copper Tube Handbook

INTERNATIONAL CODE COUNCIL (ICC)

ICC IPC	(2015) International Plumbing Code

MANUFACTURERS STANDARDIZATION SOCIETY OF THE VALVE AND FITTINGS INDUSTRY (MSS)

MSS SP-58	(1993; Reaffirmed 2010) Pipe Hangers and Supports - Materials, Design and Manufacture, Selection, Application, and Installation

NATIONAL FIRE PROTECTION ASSOCIATION (NFPA)

NFPA 90A	(2015) Standard for the Installation of Air Conditioning and Ventilating Systems

NSF INTERNATIONAL (NSF)

NSF 372	(2011) Drinking Water System Components - Lead Content
NSF/ANSI 61	(2016) Drinking Water System Components - Health Effects

1.2 SUBMITTALS

Government approval is required for submittals with a "G" designation; submittals not having a "G" designation are for Contractor Quality Control approval. Submittals with an "S" are for inclusion in the Sustainability Notebook, in conformance to Section 01 33 29 SUSTAINABILITY REPORTING. Submit the following in accordance with Section 01 33 00 SUBMITTAL

PROCEDURES:

SD-03 Product Data

Materials; G

1.3 STANDARD PRODUCTS

Specified materials shall be standard products of a manufacturer regularly engaged in the manufacture of such products. Specified equipment shall essentially duplicate equipment that has performed satisfactorily at least two years prior to bid opening. Standard products shall have been in satisfactory commercial or industrial use for 2 years prior to bid opening. The 2-year use shall include applications of equipment and materials under similar circumstances and of similar size. The product shall have been for sale on the commercial market through advertisements, manufacturers' catalogs, or brochures during the 2 year period.

1.3.1 Alternative Qualifications

Products having less than a two-year field service record will be acceptable if a certified record of satisfactory field operation for not less than 6000 hours, exclusive of the manufacturer's factory or laboratory tests, can be shown.

1.3.2 Modification of References

In each of the publications referred to herein, consider the advisory provisions to be mandatory, as though the word, "shall" had been substituted for "should" wherever it appears. Interpret references in these publications to the "authority having jurisdiction", or words of similar meaning, to mean the Contracting Officer.

1.3.2.1 Definitions

For the International Code Council (ICC) Codes referenced in the contract documents, advisory provisions shall be considered mandatory, the word "should" shall be interpreted as "shall." Reference to the "code official" shall be interpreted to mean the "Contracting Officer." For Navy owned property, references to the "owner" shall be interpreted to mean the "Contracting Officer." For leased facilities, references to the "owner" shall be interpreted to mean the "lessor." References to the "permit holder" shall be interpreted to mean the "Contractor."

1.3.2.2 Administrative Interpretations

For ICC Codes referenced in the contract documents, the provisions of Chapter 1, "Administrator," do not apply. These administrative requirements are covered by the applicable Federal Acquisition Regulations (FAR) included in this contract and by the authority granted to the Officer in Charge of Construction to administer the construction of this project. References in the ICC Codes to sections of Chapter 1, shall be applied appropriately by the Contracting Officer as authorized by his administrative cognizance and the FAR.

1.4 DELIVERY, STORAGE, AND HANDLING

Handle, store, and protect equipment and materials to prevent damage before and during installation in accordance with the manufacturer's

recommendations, and as approved by the Contracting Officer. Replace damaged or defective items.

1.5 PERFORMANCE REQUIREMENTS

1.6 REGULATORY REQUIREMENTS

Unless otherwise required herein, plumbing work shall be in accordance with ICC IPC.

1.7 PROJECT/SITE CONDITIONS

The Contractor shall become familiar with details of the work, verify dimensions in the field, and advise the Contracting Officer of any discrepancy before performing any work.

1.8 ACCESSIBILITY OF EQUIPMENT

Install all work so that parts requiring periodic inspection, operation, maintenance, and repair are readily accessible. Install concealed valves, expansion joints, controls, dampers, and equipment requiring access, in locations freely accessible through access doors.

PART 2 PRODUCTS

2.1 Materials

Materials for various services shall be in accordance with TABLES I and II. Pipe schedules shall be selected based on service requirements. Pipe fittings shall be compatible with the applicable pipe materials. Pipe threads (except dry seal) shall conform to ASME B1.20.1. Material or equipment containing a weighted average of greater than 0.25 percent lead shall not be used in any potable water system intended for human consumption, and shall be certified in accordance with NSF/ANSI 61, Annex G or NSF 372.

2.1.1 Pipe Joint Materials

Solder containing lead shall not be used with copper pipe. Joints and gasket materials shall conform to the following:

a. Flange Gaskets: Gaskets shall be made of non-asbestos material in accordance with ASME B16.21. Gaskets shall be flat, 1/16 inch thick, and contain Aramid fibers bonded with Styrene Butadiene Rubber (SBR) or Nitro Butadiene Rubber (NBR). Gaskets shall be the full face or self centering flat ring type. Gaskets used for hydrocarbon service shall be bonded with NBR.

b. Brazing Material: Brazing material shall conform to AWS A5.8/A5.8M, BCuP-5.

c. Brazing Flux: Flux shall be in paste or liquid form appropriate for use with brazing material. Flux shall be as follows: lead-free; have a 100 percent flushable residue; contain slightly acidic reagents; contain potassium borides; and contain fluorides.

d. Solder Material: Solder metal shall conform to ASTM B32.

e. Solder Flux: Flux shall be liquid form, non-corrosive, and conform to

ASTM B813, Standard Test 1.

f. PTFE Tape: PTFE Tape, for use with Threaded Metal or Plastic Pipe.

g. Flexible Elastomeric Seals: ASTM D3139, ASTM D3212 or ASTM F477.

h. Copper tubing shall conform to ASTM B88, Type K, L or M.

2.1.2 Miscellaneous Materials

Miscellaneous materials shall conform to the following:

a. Copper, Sheet and Strip for Building Construction: ASTM B370.

b. Asphalt Roof Cement: ASTM D2822/D2822M.

c. Hypochlorites: AWWA B300.

d. Liquid Chlorine: AWWA B301.

2.1.3 Pipe Insulation Material

Insulation shall be as specified in Section 23 07 00 THERMAL INSULATION FOR MECHANICAL SYSTEMS.

2.2 PIPE HANGERS, INSERTS, AND SUPPORTS

Pipe hangers, inserts, and supports shall conform to MSS SP-58.

2.3 MISCELLANEOUS PIPING ITEMS

2.3.1 Escutcheon Plates

Provide one piece or split hinge metal plates for piping entering floors, walls, and ceilings in exposed spaces. Provide chromium-plated on copper alloy plates or polished stainless steel finish in finished spaces. Provide paint finish on plates in unfinished spaces.

2.3.2 Pipe Sleeves

Provide where piping passes entirely through walls, ceilings, and floors.

2.3.2.1 Sleeves in Masonry and Concrete

Provide steel pipe sleeves or schedule 40 steel pipe sleeves.

2.3.2.2 Sleeves Not in Masonry and Concrete

Provide 26 gage galvanized steel sheet or PVC plastic pipe sleeves.

2.3.3 Pipe Hangers (Supports)

Provide MSS SP-58 Type 1 with adjustable type steel support rods, except as specified or indicated otherwise. Attach to steel joists with Type 19 or 23 clamps and retaining straps. Attach to Steel W or S beams with Type 21, 28, 29, or 30 clamps. Attach to steel angles and vertical web steel channels with Type 20 clamp with beam clamp channel adapter. Attach to horizontal web steel channel and wood with drilled hole on centerline and double nut and washer. Attach to concrete with Type 18 insert or drilled

expansion anchor. Provide Type 40 insulation protection shield for insulated piping.

PART 3 EXECUTION

3.1 GENERAL INSTALLATION REQUIREMENTS

Piping located in air plenums shall conform to NFPA 90A requirements. Piping located in shafts that constitute air ducts or that enclose air ducts shall be noncombustible in accordance with NFPA 90A. The plumbing system shall be installed complete with necessary fixtures, fittings, traps, valves, and accessories. Condensate drainage piping shall be extended to outside the building as indicated.

3.1.1 Water Pipe, Fittings, and Connections

3.1.1.1 Utilities

The piping shall be extended to fixtures, outlets, and equipment.

3.1.1.2 Cutting and Repairing

The work shall be carefully laid out in advance, and unnecessary cutting of construction shall be avoided. Damage to building, piping, wiring, or equipment as a result of cutting shall be repaired by mechanics skilled in the trade involved.

3.1.1.3 Protection of Fixtures, Materials, and Equipment

Pipe openings shall be closed with caps or plugs during installation. Fixtures and equipment shall be tightly covered and protected against dirt, water, chemicals, and mechanical injury. Upon completion of the work, the fixtures, materials, and equipment shall be thoroughly cleaned, adjusted, and operated.

3.1.1.4 Mains, Branches, and Runouts

Piping shall be installed as indicated. Pipe shall be accurately cut and worked into place without springing or forcing. Structural portions of the building shall not be weakened. Aboveground piping shall run parallel with the lines of the building, unless otherwise indicated. Bare and insulated lines shall not bear directly against building structural elements so as to transmit sound to the structure or to prevent flexible movement of the lines. Changes in pipe sizes shall be made with reducing fittings. Use of bushings will not be permitted except for use in situations in which standard factory fabricated components are furnished to accommodate specific accepted installation practice. Change in direction shall be made with fittings, except that bending of pipe 4 inches and smaller will be permitted, provided a pipe bender is used and wide sweep bends are formed. The center-line radius of bends shall be not less than six diameters of the pipe. Bent pipe showing kinks, wrinkles, flattening, or other malformations will not be acceptable.

3.1.2 Joints

Installation of pipe and fittings shall be made in accordance with the manufacturer's recommendations. Mitering of joints for elbows and notching of straight runs of pipe for tees will not be permitted. Joints shall be made up with fittings of compatible material and made for the

specific purpose intended.

3.1.2.1 Threaded

Threaded joints shall have American Standard taper pipe threads conforming to ASME B1.20.1. Only male pipe threads shall be coated with graphite or with an approved graphite compound, or with an inert filler and oil, or shall have a polytetrafluoroethylene tape applied.

3.1.2.2 Unions and Flanges

Unions, flanges and mechanical couplings shall not be concealed in walls, ceilings, or partitions. Unions shall be used on pipe sizes 2-1/2 inches and smaller; flanges shall be used on pipe sizes 3 inches and larger.

3.1.2.3 Copper Tube and Pipe

a. Brazed. Brazed joints shall be made in conformance with AWS B2.2/B2.2M, ASME B16.50, and CDA A4015 with flux and are acceptable for all pipe sizes. Copper to copper joints shall include the use of copper-phosphorus or copper-phosphorus-silver brazing metal without flux. Brazing of dissimilar metals (copper to bronze or brass) shall include the use of flux with either a copper-phosphorus, copper-phosphorus-silver or a silver brazing filler metal.

b. Soldered. Soldered joints shall be made with flux and are only acceptable for piping 2 inches and smaller. Soldered joints shall conform to ASME B31.5 and CDA A4015. Soldered joints shall not be used in compressed air piping between the air compressor and the receiver.

c. Copper Tube Extracted Joint. Mechanically extracted joints shall be made in accordance with ICC IPC.

3.1.2.4 Other Joint Methods

3.1.3 Pipe Sleeves and Flashing

Pipe sleeves shall be furnished and set in their proper and permanent location.

3.1.3.1 Sleeve Requirements

Unless indicated otherwise, provide pipe sleeves meeting the following requirements:

Secure sleeves in position and location during construction. Provide sleeves of sufficient length to pass through entire thickness of walls, ceilings, roofs, and floors.

A modular mechanical type sealing assembly may be installed in lieu of a waterproofing clamping flange and caulking and sealing of annular space between pipe and sleeve. The seals shall consist of interlocking synthetic rubber links shaped to continuously fill the annular space between the pipe and sleeve using galvanized steel bolts, nuts, and pressure plates. The links shall be loosely assembled with bolts to form a continuous rubber belt around the pipe with a pressure plate under each bolt head and each nut. After the seal assembly is properly positioned in the sleeve, tightening of the bolt shall cause the rubber sealing elements

to expand and provide a watertight seal between the pipe and the sleeve. Each seal assembly shall be sized as recommended by the manufacturer to fit the pipe and sleeve involved.

Sleeves shall not be installed in structural members, except where indicated or approved. Rectangular and square openings shall be as detailed. Each sleeve shall extend through its respective floor, or roof, and shall be cut flush with each surface, except for special circumstances. Pipe sleeves passing through floors in wet areas such as mechanical equipment rooms, lavatories, kitchens, and other plumbing fixture areas shall extend a minimum of 4 inches above the finished floor.

Unless otherwise indicated, sleeves shall be of a size to provide a minimum of 1/4 inch clearance between bare pipe or insulation and inside of sleeve or between insulation and inside of sleeve. Sleeves in bearing walls and concrete slab on grade floors shall be steel pipe or cast-iron pipe. Sleeves in nonbearing walls or ceilings may be steel pipe, cast-iron pipe, galvanized sheet metal with lock-type longitudinal seam, or plastic.

Except as otherwise specified, the annular space between pipe and sleeve, or between jacket over insulation and sleeve, shall be sealed as indicated with sealants conforming to ASTM C920 and with a primer, backstop material and surface preparation as specified in Section 07 92 00 JOINT SEALANTS. The annular space between pipe and sleeve, between bare insulation and sleeve or between jacket over insulation and sleeve shall not be sealed for interior walls which are not designated as fire rated.

3.1.3.2 Pipe Penetrations

Provide sealants for all pipe penetrations. All pipe penetrations shall be sealed to prevent infiltration of air, insects, and vermin.

3.1.4 Supports

3.1.4.1 General

Hangers used to support piping 2 inches and larger shall be fabricated to permit adequate adjustment after erection while still supporting the load. Pipe guides and anchors shall be installed to keep pipes in accurate alignment, to direct the expansion movement, and to prevent buckling, swaying, and undue strain. Piping subjected to vertical movement when operating temperatures exceed ambient temperatures shall be supported by variable spring hangers and supports or by constant support hangers. In the support of multiple pipe runs on a common base member, a clip or clamp shall be used where each pipe crosses the base support member. Spacing of the base support members shall not exceed the hanger and support spacing required for an individual pipe in the multiple pipe run. Threaded sections of rods shall not be formed or bent.

3.1.4.2 Pipe Supports and Structural Bracing, Seismic Requirements

Piping shall be supported and braced to resist seismic loads as specified in Section 22 05 48.00 20 MECHANICAL SOUND, VIBRATION, AND SEISMIC CONTROL. Structural steel required for reinforcement to properly support piping, headers, and equipment, but not shown, shall be provided. Material used for supports shall be as specified in Section 05 50 13 MISCELLANEOUS METAL FABRICATIONS.

3.1.4.3 Pipe Hangers, Inserts, and Supports

Installation of pipe hangers, inserts and supports shall conform to MSS SP-58 except as modified herein.

a. Types 5, 12, and 26 shall not be used.

b. Type 3 shall not be used on insulated pipe.

c. Type 18 inserts shall be secured to concrete forms before concrete is placed. Continuous inserts which allow more adjustment may be used if they otherwise meet the requirements for type 18 inserts.

d. Type 19 and 23 C-clamps shall be torqued per MSS SP-58 and shall have both locknuts and retaining devices furnished by the manufacturer. Field-fabricated C-clamp bodies or retaining devices are not acceptable.

e. Type 20 attachments used on angles and channels shall be furnished with an added malleable-iron heel plate or adapter.

f. Type 24 may be used only on trapeze hanger systems or on fabricated frames.

g. Type 40 shields shall:

(1) Be used on insulated pipe less than 4 inches.

(2) Have a high density insert for all pipe sizes. High density inserts shall have a density of 8 pcf or greater.

h. Horizontal pipe supports shall be spaced as specified in MSS SP-58 and a support shall be installed not over 1 foot from the pipe fitting joint at each change in direction of the piping. Horizontal pipe runs shall include allowances for expansion and contraction.

i. Vertical pipe shall be supported at each floor, except at slab-on-grade, at intervals of not more than 15 feet nor more than 8 feet from end of risers, and at vent terminations. Vertical pipe risers shall include allowances for expansion and contraction.

j. Type 35 guides using steel, reinforced polytetrafluoroethylene (PTFE) or graphite slides shall be provided to allow longitudinal pipe movement. Slide materials shall be suitable for the system operating temperatures, atmospheric conditions, and bearing loads encountered. Lateral restraints shall be provided as needed. Where steel slides do not require provisions for lateral restraint the following may be used:

(1) On pipe less than 4 inches a Type 40 shield, attached to the pipe or insulation, may freely rest on a steel plate.

k. Pipe hangers on horizontal insulated pipe shall be the size of the outside diameter of the insulation. The insulation shall be continuous through the hanger on all pipe sizes and applications.

3.1.4.4 Structural Attachments

Attachment to building structure concrete and masonry shall be by cast-in concrete inserts, built-in anchors, or masonry anchor devices. Inserts

and anchors shall be applied with a safety factor not less than 5. Supports shall not be attached to metal decking. Supports shall not be attached to the underside of concrete filled floor or concrete roof decks unless approved by the Contracting Officer. Masonry anchors for overhead applications shall be constructed of ferrous materials only.

3.2 IDENTIFICATION SYSTEMS

3.2.1 Pipe Color Code Marking

Color code marking of piping shall be as specified in Section 09 90 00 PAINTS AND COATINGS.

3.3 PAINTING

Painting of pipes, hangers, supports, and other iron work, either in concealed spaces or exposed spaces, is specified in Section 09 90 00 PAINTS AND COATINGS.

3.4 TABLES

TABLE I

PIPE AND FITTING MATERIALS FOR DRAINAGE, WASTE, AND VENT PIPING SYSTEMS

Item #	Pipe and Fitting Materials	SERVICE A	SERVICE B	SERVICE C	SERVICE D	SERVICE E	SERVICE F
1	Copper drainage tube, (DWV), ASTM B306		X		X		
2	Wrought copper and wrought alloy solder-joint drainage fittings. ASME B16.29		X		X		
3	Cast copper alloy solder joint drainage fittings, DWV, ASME B16.23		X		X		

SERVICE:
A - Underground Building Soil, Waste and Storm Drain
B - Aboveground Soil, Waste, Drain In Buildings
C - Underground Vent
D - Aboveground Vent
E - Interior Rainwater Conductors Aboveground
F - Corrosive Waste And Vent Above And Belowground
* - Hard Temper

-- End of Section --

SECTION 22 05 48.00 20

MECHANICAL SOUND, VIBRATION, AND SEISMIC CONTROL
04/06

PART 1 GENERAL

1.1 REFERENCES

The publications listed below form a part of this specification to the extent referenced. The publications are referred to within the text by the basic designation only.

AIR-CONDITIONING, HEATING AND REFRIGERATION INSTITUTE (AHRI)

AHRI 575	(2008) Method of Measuring Machinery Sound Within an Equipment Space
ANSI/AHRI 370	(2011) Sound Rating of Large Outdoor Refrigerating and Air-Conditioning Equipment

AMERICAN INSTITUTE OF STEEL CONSTRUCTION (AISC)

AISC 360	(2016) Specification for Structural Steel Buildings

AMERICAN WELDING SOCIETY (AWS)

AWS D1.1/D1.1M	(2015; Errata 1 2015; Errata 2 2016) Structural Welding Code - Steel

ASTM INTERNATIONAL (ASTM)

ASTM A123/A123M	(2017) Standard Specification for Zinc (Hot-Dip Galvanized) Coatings on Iron and Steel Products
ASTM A36/A36M	(2014) Standard Specification for Carbon Structural Steel
ASTM A653/A653M	(2015; E 2016) Standard Specification for Steel Sheet, Zinc-Coated (Galvanized) or Zinc-Iron Alloy-Coated (Galvannealed) by the Hot-Dip Process
ASTM C94/C94M	(2016) Standard Specification for Ready-Mixed Concrete
ASTM D2240	(2015) Standard Test Method for Rubber Property - Durometer Hardness
ASTM D471	(2016) Standard Test Method for Rubber Property - Effect of Liquids
ASTM E84	(2016) Standard Test Method for Surface Burning Characteristics of Building Materials

SHEET METAL AND AIR CONDITIONING CONTRACTORS' NATIONAL ASSOCIATION (SMACNA)

SMACNA 1793	(2012) Architectural Sheet Metal Manual, 7th Edition
SMACNA 1966	(2005) HVAC Duct Construction Standards Metal and Flexible, 3rd Edition

1.2 RELATED REQUIREMENTS

The provisions of Section 23 03 00.00 20 BASIC MECHANICAL MATERIALS AND METHODS apply to this section.

1.3 DEFINITIONS

1.3.1 Decibels dB

Measure of sound level. Decibels are referenced to either 20 uPa for sound pressure levels or one pW for sound power levels. dBA is the overall "A" weighted sound level.

1.3.2 Machinery

The vibration or noise producing equipment that must be isolated.

1.3.3 Manufacturer

The fabricator or supplier of vibration-isolation or seismic-protection materials and equipment. For mechanical equipment and machinery the term machinery manufacturer will be used.

1.3.4 Micropascal uPa

10 to the minus 6 power newtons per square meter.

1.3.5 Picowatt pW

10 to the minus 12 power watts.

1.4 SYSTEM DESCRIPTION

1.4.1 Spring Isolator Data

For each type and size of spring isolator, submit the spring outside diameter, deflection, operating spring height, unloaded spring height, solid spring height, the ratio of the outside diameter to the operating spring height, the load to deflection ratio of the springs, and weight and sizes of structural steel members.

1.4.2 Machinery Manufacturer's Sound Data

For each piece of indicated machinery to be vibration isolated, the calculated sound power test data or sound pressure test data as levels in dB in the eight octave bands between 63 and 8,000 Hz. Refer sound power levels to one pW and sound pressure levels to 20 uPa. Submit the overall "A" weighted scale sound pressure level in dB. Submit the standard test procedure used to obtain the sound power or pressure data for the

applicable vibration isolation equipment size.

1.4.3 Machinery

For each item of machinery, compare spring static deflections with the specified minimum static deflection, to show that the calculated spring static deflections are not less than the minimum static deflections specified. Rated spring static deflections are not acceptable in lieu of calculated spring static deflections.

1.4.4 Machinery Over 300 Pounds

For machinery items over 300 pounds, provide calculations for shear, pull-up, primary overturning, and secondary overturning.

1.4.5 Machinery Vibration Criteria

TABLE 1A						
Vibration Isolator Types and Minimum Static Deflection						
(MSD, inches) for 4-8 inch slab on grade and column supported.						
Column Spacing	Slab on earth and 0-30 feet		31-40 feet		41-50 feet	
Equipment	Type (Note (1))	MSD (Note (1))	Type (Note (1))	MSD (Note (1))	Type (Note (1))	MSD (Note (1))
Reciprocating Heat Pumps						

TABLE 1A						
Vibration Isolator Types and Minimum Static Deflection						
(MSD, inches) for 4-8 inch slab on grade and column supported.						
Column Spacing	Slab on earth and 0-30 feet		31-40 feet		41-50 feet	
Equipment	Type (Note (1))	MSD (Note (1))	Type (Note (1))	MSD (Note (1))	Type (Note (1))	MSD (Note (1))
500 to 750 rpm	SV-R	1.75	SV-R	2.5	SV-R	3.5
751 rpm and up	SV-R	1.5	SV-R	2.5	SV-R	3.5
Closed Coupled Pumps						
Up to 7-1/2 hp	S-I	1.0	S-I	1.0	S-I	1.0
Factory Assembled Air Handling Equipment AH, AC and HV Units (Note (2))						

TABLE 1A						
Vibration Isolator Types and Minimum Static Deflection						
(MSD, inches) for 4-8 inch slab on grade and column supported.						
Column Spacing	Slab on earth and 0-30 feet		31-40 feet		41-50 feet	
Equipment	Type (Note (1))	MSD (Note (1))	Type (Note (1))	MSD (Note (1))	Type (Note (1))	MSD (Note (1))
Floor Mounted Units						
Up to 5 hp	S	1.0	S	1.0	S	1.0
Over 5 hp						
Up to 400 rpm	S-R	1.75	S-R	1.75	S-R	2.5
Over 401 rpm	S-R	1.0	S-R	1.5	S-R	2.5
Tubular Centrifugal and Axial Fans (Note (2))						
Suspended	H with deflection specified for centrifugal blowers					

TABLE 1A						
Vibration Isolator Types and Minimum Static Deflection						
(MSD, inches) for 4-8 inch slab on grade and column supported.						
Column Spacing	Slab on earth and 0-30 feet		31-40 feet		41-50 feet	
Equipment	Type (Note (1))	MSD (Note (1))	Type (Note (1))	MSD (Note (1))	Type (Note (1))	MSD (Note (1))
NOTES:						
(1) Equipment Vibration Isolation Schedule Designations (Hyphenated designations are combinations of the following:)						
B - Welded structural steel bases.						
H - Spring isolators (suspended equipment and piping). Where required, provide with adjustable preloading devices.						
HR - Thrust restraints						
I - Concrete inertia bases with steel forms.						
NM - Neoprene mounts.						

TABLE 1A						
Vibration Isolator Types and Minimum Static Deflection						
(MSD, inches) for 4-8 inch slab on grade and column supported.						
Column Spacing	Slab on earth and 0-30 feet		31-40 feet		41-50 feet	
Equipment	Type (Note (1))	MSD (Note (1))	Type (Note (1))	MSD (Note (1))	Type (Note (1))	MSD (Note (1))
NP - Neoprene pads.						
R - Structural steel rail for equipment mounts.						
S - Freestanding spring isolators (floor-mounted equipment).						
SV - Freestanding spring isolators (floor-mounted equipment).						
SX - Freestanding spring isolators with adjustable cushioned vertical stops and cushioned horizontal stops (floor-mounted equipment. Protected spring isolators SX may be substituted wherever S or SV is specified and shall meet all requirements.						
(2) Fans						
a. When fan motors are 75 hp or larger, use the deflection requirements for the next wider column spacing. Except for building slab on grade a minimum of 2.5 inches should be used unless larger deflections are specified in the centrifugal blower table.						
b. Provide sway brace isolators for tubular centrifugal and axial fans when the fan pressure exceeds 4 inches water column.						
c. Provide inertia bases for all fans in lieu of structural steel bases or rails specified above when the fan pressure exceeds 4 inches water column.						
d. With attaching brackets, suspension spring isolators bridge between the structure and the thrust-producing machinery such as high-pressure fan. Both types H and HR normally provide reaction in tension, while types S, SV, and SX normally provide reaction in compression. Thrust restraints are low-cost and effective components available from manufacturers. Use thrust restraints to eliminate the need for or reduce the magnitude of inertia mass when the mass is only used to reduce the displacement effects of the thrust.						

Provide vibration isolators for mechanical and electrical machinery and associated piping and ductwork , to minimize transmission of vibrations and structure borne noise to the building structure or spaces or from the building structure to the machinery. Comply with the following vibration schedule.

1.4.6 Machinery Airborne Sound Level Criteria

TABLE 2A								
Sound Data Schedule								
Equipment	Maximum Sound Power Level (dB)							
	Octave Band Level Center Frequency (Hz)							
	63	125	250	500	1000	2000	4000	8000
Air Handling Unit	94	90	89	89	89	84	82	79
Make-Up Air Fan	91	91	80	84	82	76	71	65
Air Conditioning Unit	100	96	90	89	86	80	75	72
Pump	85	80	82	82	80	77	74	72
Fan	55	50	48	47	48	46	42	37

1.4.6.1 Basic Criteria

For each piece of machinery in the human work environment, do not exceed the maximum airborne sound levels 84 dB A-weighted scale, continuous or intermittent, or 140 dB peak sound pressure-level, impact or impulse, noise.

1.4.6.2 Sound Data Schedule

TABLE 2A								
Sound Data Schedule								
Equipment	Maximum Sound Power Level (dB)							
	Octave Band Level Center Frequency (Hz)							
	63	125	250	500	1000	2000	4000	8000
Air Handling Unit	94	90	89	89	89	84	82	79
Make-Up Air Fan	91	91	80	84	82	76	71	65
Air Conditioning Unit	100	96	90	89	86	80	75	72
Pump	85	80	82	82	80	77	74	72
Fan	55	50	48	47	48	46	42	37

1.4.7 Seismic Protection Criteria

Use a Horizontal Force Factor minimum 60 percent of the machinery weight considered passing through the machinery center of gravity in any horizontal direction. Unless vibration isolation is required to protect machinery against unacceptable structure transmitted noise or vibration, protect the structure or machinery from earthquakes by rigid structurally sound attachment to the load-supporting structure. Protect each piece of vibration-isolated machinery with protected spring isolators or separate seismic restraint devices. Determine by calculations the number and size of seismic restraints needed for each machinery. Verify seismic restraint vendor's calculations by a registered professional engineer. Provide seismic snubbers and protected spring isolators rated in three principle axes. Verify ratings by independent laboratory testing, .

1.4.8 Welding

AWS D1.1/D1.1M.

1.5 SUBMITTALS

Government approval is required for submittals with a "G" designation; submittals not having a "G" designation are for Contractor QC approval. Submittals with an "S" are for inclusion in the Sustainability Notebook, in conformance to Section 01 33 29, SUSTAINABITY REPORTING. Submit the following in accordance with Section 01 33 00 SUBMITTAL PROCEDURES:

SD-02 Shop Drawings

Machinery Bases

SD-03 Product Data

Isolators

Flexible Connectors

Flexible Duct Connectors

Pipe Guides

Vertical Stops

Thrust Restraints

Machinery Bases

Machinery Foundations and Subbases

Machinery Manufacturer's Sound Data

SD-05 Design Data

Machinery Bases

Each Item of Machinery

Each Item of Machinery Over 300 Pounds

Submit design calculations for ,platforms, and, either by the machinery manufacturer for the recommended machinery mounting or by the vibration-isolation equipment manufacturer.

SD-06 Test Reports

Equipment Vibration Tests

Equipment Sound Level Tests

Protected Spring Isolators

SD-08 Manufacturer's Instructions

Vibration and Noise Isolation Components

1.6 QUALITY ASSURANCE

1.6.1 Vibration Isolator Procurement

For each piece of machinery to be isolated from vibration, supply the, platform, vibration isolators, and other associated materials and equipment as a coordinated package by a single manufacturer or by the machinery manufacturer. Select isolators that provide uniform deflection even when machinery weight is not evenly distributed. This requirement does not include the flexible connectors or the hangers for the associated

piping and ductwork.

1.6.2 Unitized Machinery Assemblies

Mounting of unitized assemblies directly on vibration isolation springs is acceptable if machinery manufacturer certifies that the end supports of the assemblies have been designed for such installation.

PART 2 PRODUCTS

2.1 CORROSION PROTECTION FOR STEEL PARTS

ASTM A123/A123M or ASTM A653/A653M hot-dipped galvanized, or equivalent manufacturer standard coatings. Where steel parts are exposed to the weather, provide galvanized coating of at least 2 ounces of zinc per square foot of surface. Coat springs with neoprene.

2.2 NEOPRENE

ASTM D471 and ASTM D2240, Grade Durometer 40, 50, or 60, and oil resistant.

2.3 FLOOR-MOUNTED ISOLATORS

2.3.1 Neoprene Isolation Pads

Provide pads at least 1/4 inch thick with cross-ribbed or waffle design. For concentrated loads, provide steel bearing plates bonded or cold cemented to the pads.

2.3.2 Neoprene Isolators

Provide molded neoprene isolators having steel base plates with mounting holes and, at the top, steel mounting plates with mounting holes or threaded inserts. Provide elements of type and size coded with molded letters or color-coded for capacity identification. Embed metal parts completely in neoprene.

2.4 SPRING ISOLATORS AND PROTECTED SPRING ISOLATORS

Provide spring isolators or protected spring isolators that are adjustable and laterally stable with free-standing springs of horizontal stiffness at minimum 80 percent of the vertical (axial) stiffness. For machine-attached and floor-attached restraining elements, separate from metal-to-metal contact by neoprene cushions 1/8 inch thick minimum. Provide neoprene acoustic friction pads at least 1/4 inch thick.

2.4.1 Springs

Provide springs with base and compression plates, to keep spring ends parallel during and after deflection to operating height. Provide outside coil diameters at least 0.8 of the operating height. At operating height, springs shall have additional travel to complete (solid) compression equal to at least 50 percent of the operating deflection.

2.4.2 Mounting and Adjustment

Provide base and compression plates with mounting holes or threaded fittings. Bolt leveling adjustment bolts to machinery or base.

2.5 SUSPENSION ISOLATORS

Provide hangers with suspension isolators encased in open steel brackets. Isolate hanger rods from isolator steel brackets with neoprene-lined opening.

2.5.1 Suspension Neoprene Isolators

Provide double-deflection elements with minimum 3/8 inch deflection.

2.5.2 Suspension Spring Isolators

Provide hangers with springs and molded neoprene elements in series. Provide isolators with adjustable spring-preloading devices where required to maintain constant pipe elevations during installation and when pipe operational loads are transferred to the springs.

2.6 MACHINERY BASES

ASTM A36/A36M and AISC 360.

2.7 FLEXIBLE CONNECTORS FOR PIPING

Straight or elbow flexible connectors rated for temperatures, pressures, and fluids to be conveyed. Provide flexible connectors with the strength 4 times operating pressure at highest system operating temperature. Provide elbow flexible connectors with a permanently set angle.

2.7.1 Elastomeric Flexible Connectors

Fabricated of multiple plies of tire cord fabric and elastomeric materials with integral reinforced elastomeric flanges with galvanized malleable iron back up rings.

2.7.2 Metal Flexible Connectors

Fabricated of Grade E phosphor bronze, monel or corrugated stainless steel tube covered with comparable bronze or stainless steel braid restraining and pressure cover.

2.8 FLEXIBLE DUCT CONNECTORS

Provide flexible duct connectors fabricated in accordance with SMACNA 1966.

2.9 PIPE GUIDES

Factory-fabricated. Weld steel bar guides to the pipe at a maximum radial spacing of 60 degrees. The outside diameter around the guide bars shall be smaller than the inside diameter of the guide sleeve in accordance with standard field construction practice. For pipe temperatures below 60 degrees F, provide metal sleeve, minimum one pound per cubic foot density insulation.

2.10 THRUST RESTRAINTS

Adjustable spring thrust restraints, able to resist the thrust force with at least 25 percent unused capacity. The operating spring deflection shall be not less than 50 percent of the static deflection of the isolation supporting the machinery.

PART 3 EXECUTION

3.1 INSTALLATION

3.1.1 Vibration and Noise Isolation Components

Install vibration-and-noise isolation materials and equipment as indicated and in accordance with machinery manufacturer's instructions.

3.1.2 Suspension Vibration Isolators

Provide suspension isolation hangers for piping, suspended equipment, and suspended equipment platforms in mechanical equipment rooms, as specified. For operating load static deflections of 1/4 inch or less, provide neoprene pads or single deflection neoprene isolators. For operating load static deflections over 5/16 to 3/8 inch, provide double-deflection neoprene element isolators. For operating load static deflections over 3/8 inch, provide isolators with spring and neoprene elements in series.

3.1.3 Vertical Stops

For machinery affected by wind pressure or having an operational weight different from installed weight, provide resilient vertical limit stops which prevent spring extension when weight is removed. Provide vertical stops for machinery containing liquid, such as water chillers, evaporative coolers, boilers, and cooling towers. Spring isolated or protected spring isolated machinery must rock and move freely within limits of stops or seismic restraint devices.

3.1.4 Thrust Restraints

Where required, provide pairs of thrust restraints, symmetrically installed on both sides of the steady state line of thrust.

3.1.5 Flexible Pipe and Duct Connectors

Install flexible connectors in accordance with the manufacturer's instructions. When liquid pulsation dampening is required, flexible connectors with spherical configuration may be used. Provide restraints for pipe connectors at pumps to prevent connector failure upon pump startup.

3.1.6 Machinery

Provide vibration isolators, flexible connectors in accordance with manufacturer's recommendations. Machinery with spring isolators or protected spring isolators shall rock or move freely within limits of stops or seismic snubber restraints.

3.1.6.1 Stability

Isolators shall be stable during starting and stopping of machinery without traverse and eccentric movement of machinery that would damage or adversely affect the machinery or attachments.

3.1.6.2 Lateral Motion

The installed vibration isolation system for each piece of floor or ceiling mounted machinery shall have a maximum lateral motion under machinery start up and shut down conditions of not more than 1/4 inch. Restrain motions in excess by approved spring mountings.

3.1.6.3 Unbalanced Machinery

Provide foundation suspension systems specifically designed to resist horizontal forces for machinery with large unbalanced horizontal forces. Vibration isolator systems shall conform to the machinery manufacturer's recommendations.

3.1.6.4 Nonrotating Machinery

Mount nonrotating machinery in systems which includes rotating or vibrating machinery on isolators having the same deflection as the hangers and supports for the pipe connected to.

3.1.6.5 Unitized Machinery Assemblies

TABLE 3A						
Vibration Isolator Types and Minimum Static Deflection						
(MSD, inches) for 4-8 inch slab on grade and column supported.						
Column Spacing	Slab on earth and 0-30 feet		31-40 feet		41-50 feet	
Equipment	Type (Note (1))	MSD (Note (1))	Type (Note (1))	MSD (Note (1))	Type (Note (1))	MSD (Note (1))
Centrifugal Chillers or Heat Pumps						
Hermetic Type	SV-B	1.75	SV-B	2.5	SV-B	3.5
Open Type	SV-1	1.75	SV-I	2.5	SV-I	3.5
Reciprocating Air or Refrigeration Compressors						
500 to 750 rpm	S-R	1.75	S-R	2.5	S-R	3.5
751 rpm and up	S-R	1.5	S-R	2.5	S-R	3.5

TABLE 3A						
Vibration Isolator Types and Minimum Static Deflection						
(MSD, inches) for 4-8 inch slab on grade and column supported.						
Column Spacing	Slab on earth and 0-30 feet		31-40 feet		41-50 feet	
Equipment	Type (Note (1))	MSD (Note (1))	Type (Note (1))	MSD (Note (1))	Type (Note (1))	MSD (Note (1))
Reciprocating Chillers or Heat Pumps						
500 to 750 rpm	SV-R	1.75	SV-R	2.5	SV-R	3.5
751 rpm and up	SV-R	1.5	SV-R	2.5	SV-R	3.5
Packaged Boilers	SV	1.0	SV	2.5	SV-R	3.5
Closed Coupled Pumps						
Up to 7-1/2 hp	S-I	1.0	S-I	1.0	S-I	1.0
Factory Assembled Air Handling Equipment AH, AC and HV Units (Note (2))						

TABLE 3A						
Vibration Isolator Types and Minimum Static Deflection						
(MSD, inches) for 4-8 inch slab on grade and column supported.						
Column Spacing	Slab on earth and 0-30 feet		31-40 feet		41-50 feet	
Equipment	Type (Note (1))	MSD (Note (1))	Type (Note (1))	MSD (Note (1))	Type (Note (1))	MSD (Note (1))
Floor Mounted Units						
Up to 5 hp	S	1.0	S	1.0	S	1.0
Centrifugal Blowers						
175 - 224 rpm	S-B	4.75	S-B	4.75	S-B	4.75
225 - 299 rpm	S-B	3.75	S-B	4.75	S-B	4.75
300 - 374 rpm	S-B	2.75	S-B	4.5	S-B	4.75
375 - 499 rpm	S-B	2.5	S-B	3.5	S-B	4.5
Over 500 rpm	S-B	1.75	S-B	2.5	S-B	3.5
Tubular Centrifugal and Axial Fans (Note (2))						

TABLE 3A

Vibration Isolator Types and Minimum Static Deflection

(MSD, inches) for 4-8 inch slab on grade and column supported.

Column Spacing	Slab on earth and 0-30 feet		31-40 feet		41-50 feet	
Equipment	Type (Note (1))	MSD (Note (1))	Type (Note (1))	MSD (Note (1))	Type (Note (1))	MSD (Note (1))
Floor Mounted Arrangements 1 & 9	S-B with deflections specified for centrifugal blowers					
Utility Fans (Note (2))						
Suspended	H with deflections specified for centrifugal blowers but not to exceed 2.75 inches					
Floor-Mounted	S-R with deflections not specified for centrifugal blowers but not to exceed 2.75 inches					
High Pressure Fans (6 Inch Water-Column Static Pressure) and Other Machineries Producing Thrust (Note (2))	HR recommended for minimizing undesirable thrust effects					

NOTES:

(1) Equipment Vibration Isolation Schedule Designations (Hyphenated designations are combinations of the following:)

B - Welded structural steel bases.

H - Spring isolators (suspended equipment and piping). Where required, provide with adjustable preloading devices.

HR - Thrust restraints

TABLE 3A

Vibration Isolator Types and Minimum Static Deflection

(MSD, inches) for 4-8 inch slab on grade and column supported.

Column Spacing	Slab on earth and 0-30 feet		31-40 feet		41-50 feet	
Equipment	Type (Note (1))	MSD (Note (1))	Type (Note (1))	MSD (Note (1))	Type (Note (1))	MSD (Note (1))

I - Concrete inertia bases with steel forms.

NM - Neoprene mounts.

NP - Neoprene pads.

R - Structural steel rail for equipment mounts.

S - Freestanding spring isolators (floor-mounted equipment).

SV - Freestanding spring isolators (floor-mounted equipment).

SX - Freestanding spring isolators with adjustable cushioned vertical stops and cushioned horizontal stops (floor-mounted equipment. Protected spring isolators SX may be substituted wherever S or SV is specified and shall meet all requirements.

(2) Fans

a. When fan motors are 75 hp or larger, use the deflection requirements for the next wider column spacing. Except for building slab on grade a minimum of 2.5 inches should be used unless larger deflections are specified in the centrifugal blower table.

b. Provide sway brace isolators for tubular centrifugal and axial fans when the fan pressure exceeds 4 inches water column.

c. Provide inertia bases for all fans in lieu of structural steel bases or rails specified above when the fan pressure exceeds 4 inches water column.

d. With attaching brackets, suspension spring isolators bridge between the structure and the thrust-producing machinery such as high-pressure fan. Both types H and HR normally provide reaction in tension, while types S, SV, and SX normally provide reaction in compression. Thrust restraints are low-cost and effective components available from manufacturers. Use thrust restraints to eliminate the need for or reduce the magnitude of inertia mass when the mass is only used to reduce the displacement effects of the thrust.

Unitized assemblies such as chillers with evaporator and condenser, and top mounted centrifugal compressor or unitized absorption refrigeration machines, structurally designed with end supports, may be mounted on steel

rails and springs in lieu of steel bases and springs. Where the slab or deck is less than 4 inches thick, provide spring isolation units with the deflection double that of the vibration isolation schedule, up to a maximum static deflection of 5 inches.

3.1.6.6 Roof and Upper Floor Mounted Machinery

TABLE 3A						
Vibration Isolator Types and Minimum Static Deflection						
(MSD, inches) for 4-8 inch slab on grade and column supported.						
Column Spacing	Slab on earth and 0-30 feet		31-40 feet		41-50 feet	
Equipment	Type (Note (1))	MSD (Note (1))	Type (Note (1))	MSD (Note (1))	Type (Note (1))	MSD (Note (1))

TABLE 3A						
Vibration Isolator Types and Minimum Static Deflection						
(MSD, inches) for 4-8 inch slab on grade and column supported.						
Column Spacing	Slab on earth and 0-30 feet		31-40 feet		41-50 feet	
Equipment	Type (Note (1))	MSD (Note (1))	Type (Note (1))	MSD (Note (1))	Type (Note (1))	MSD (Note (1))
Closed Coupled Pumps						
Up to 7-1/2 hp	S-I	1.0	S-I	1.0	S-I	1.0
Over 7-1/2 hp	S-I	1.5	S-I	2.5	S-I	2.5
Factory Assembled Air Handling Equipment AH, AC and HV Units (Note (2))						
Floor Mounted Units						

TABLE 3A						
Vibration Isolator Types and Minimum Static Deflection						
(MSD, inches) for 4-8 inch slab on grade and column supported.						
Column Spacing	Slab on earth and 0-30 feet		31-40 feet		41-50 feet	
Equipment	Type (Note (1))	MSD (Note (1))	Type (Note (1))	MSD (Note (1))	Type (Note (1))	MSD (Note (1))
Up to 5 hp	S	1.0	S	1.0	S	1.0
Over 5 hp						
Up to 400 rpm	S-R	1.75	S-R	1.75	S-R	2.5
Over 401 rpm	S-R	1.0	S-R	1.5	S-R	2.5
Tubular Centrifugal and Axial Fans (Note (2))						
Suspended		H with deflection specified for centrifugal blowers				

TABLE 3A						
Vibration Isolator Types and Minimum Static Deflection						
(MSD, inches) for 4-8 inch slab on grade and column supported.						
Column Spacing	Slab on earth and 0-30 feet		31-40 feet		41-50 feet	
Equipment	Type (Note (1))	MSD (Note (1))	Type (Note (1))	MSD (Note (1))	Type (Note (1))	MSD (Note (1))
NOTES:						
(1) Equipment Vibration Isolation Schedule Designations (Hyphenated designations are combinations of the following:)						
B - Welded structural steel bases.						
H - Spring isolators (suspended equipment and piping). Where required, provide with adjustable preloading devices.						
HR - Thrust restraints						
I - Concrete inertia bases with steel forms.						
NM - Neoprene mounts.						
NP - Neoprene pads.						
R - Structural steel rail for equipment mounts.						
S - Freestanding spring isolators (floor-mounted equipment).						
SV - Freestanding spring isolators (floor-mounted equipment).						

TABLE 3A						
Vibration Isolator Types and Minimum Static Deflection						
(MSD, inches) for 4-8 inch slab on grade and column supported.						
Column Spacing	Slab on earth and 0-30 feet		31-40 feet		41-50 feet	
Equipment	Type (Note (1))	MSD (Note (1))	Type (Note (1))	MSD (Note (1))	Type (Note (1))	MSD (Note (1))
SX - Freestanding spring isolators with adjustable cushioned vertical stops and cushioned horizontal stops (floor-mounted equipment. Protected spring isolators SX may be substituted wherever S or SV is specified and shall meet all requirements.						
(2) Fans						
a. When fan motors are 75 hp or larger, use the deflection requirements for the next wider column spacing. Except for building slab on grade a minimum of 2.5 inches should be used unless larger deflections are specified in the centrifugal blower table.						
b. Provide sway brace isolators for tubular centrifugal and axial fans when the fan pressure exceeds 4 inches water column.						
c. Provide inertia bases for all fans in lieu of structural steel bases or rails specified above when the fan pressure exceeds 4 inches water column.						
d. With attaching brackets, suspension spring isolators bridge between the structure and the thrust-producing machinery such as high-pressure fan. Both types H and HR normally provide reaction in tension, while types S, SV, and SX normally provide reaction in compression. Thrust restraints are low-cost and effective components available from manufacturers. Use thrust restraints to eliminate the need for or reduce the magnitude of inertia mass when the mass is only used to reduce the displacement effects of the thrust.						

On the roof or upper floors, mount machinery on isolators with vertical stops. Rest isolators on beams or structures designed and installed in accordance with the SMACNA 1793, Plate 61.

3.1.7 Piping

Provide vibration isolation for piping. The isolator deflections shall be equal to or greater than the static deflection of the vibration isolators provided for the connected machinery as follows:

3.1.7.1 Piping Connected to Vibration Isolated Machinery

For a distance of 50 feet or 50 pipe diameters, whichever is greater.

3.1.8 Water Distribution Piping Application

Resiliently support piping with combination spring and neoprene isolation hangers. Provide spring elements with 5/8 inch static deflection; install the hanger with spacing so that the first harmonic natural frequency is not less than 360 Hz. Provide double-deflection neoprene elements. For the first two isolation hangers from the rotating equipment of 3 1/2 inch and smaller piping systems, ensure a deflection equal to the equipment-isolation static deflection. For the first four piping isolation hanger supports from rotating equipment of 4 inch and larger piping systems, use resilient hanger-rod isolators at a fixed elevation regardless of load changes. Incorporate an adjustable preloading device to transfer the load to the spring element within the hanger mounting after the piping system has been filled with water.

3.1.9 Pipe Hanger and Support Installation

3.1.9.1 Pipe Hangers

Provide eye-bolts or swivel joints for pipe hangers to permit pipe thermal or mechanical movement without angular misalignment of hanger vibration isolator.

3.1.9.2 High Temperatures

Where neoprene elements of vibration isolator may be subjected to high pipe temperatures, above 160 degrees F, provide metal heat shields or thermal isolators.

3.1.9.3 Valves

Provide vibration isolation hangers and supports at modulating, pressure reducing, or control valves which will induce fluid pulsations. When required or indicated, isolate valves with flexible connectors.

3.1.9.4 Machinery Without Flexible Connections

When piping is not connected to vibrating machinery with flexible connectors, provide the first four hangers with isolation elements designed for deflections equal to equipment vibration isolator deflections (including static, operating, and start-up).

3.1.9.5 Pipe Risers

Provide pipe riser supports with bearing plates and two layers of 1/4 inch thick ribbed or waffled neoprene pad loaded to not more than 50 psi. Separate isolation pads with 1/4 inch steel plate. Weld pipe riser clamps at anchor points to the pipe and to pairs of vertical acoustical pipe anchor mountings which shall be rigidly fastened to the steel framing.

3.1.9.6 Supports at Base of Pipe Risers

Piping isolation supports at the base of risers shall be two layers of 1/2 inch thick heavy-duty neoprene pad separated by 1/4 inch thick steel plate. Use bearing plates sized to provide a pad loading of not more than 500 psi. Weld the stanchion between the pipe and isolation support to the pipe and weld or bolt to the isolation support. Bolt isolation support to

the floor slab with resilient sleeves and washers. Where supplementary steel is required to support piping, provide a maximum deflection of 0.08 inches at the mid-span of this steel under the load. Rigidly support piping from the supplementary steel with the supplementary steel isolated from the building structure with isolators.

3.1.9.7 Pipe Anchors

Attach each end of the pipe anchor to an omni-directional pipe isolator which in turn shall be rigidly fastened to the steel framing or structural concrete. Provide a telescoping pipe isolator of two sizes of steel tubing separated by a minimum 1/2 inch thick pad of heavy-duty neoprene or heavy-duty neoprene and canvas. Provide vertical restraints by similar material to prevent vertical travel in either direction. The load on the isolation material shall not exceed 500 psi.

3.1.10 Equipment Room Sound Isolation

Do not allow direct contact between pipe or ducts and walls, floor slabs, roofs, ceilings or partitions of equipment rooms.

3.1.10.1 Pipe Penetrations

Provide galvanized Schedule 40 pipe sleeves and tightly pack annular space between sleeves and pipe with insulation having a flame spread rating not more than 25 and a smoke developed rating not more than 50 when tested in accordance with ASTM E84, maximum effective temperature 1000 degrees F, bulk density 6 pounds/cu. ft. minimum. Provide uninsulated pipe with a one inch thick mineral fiber sleeve the full length of the penetration and seal each end with an non-hardening compound. Provide sealant and mineral-fiber sleeve of a flame spread rating not more than 25 and a smoke developed rating not more than 50 when tested in accordance with ASTM E84.

3.1.10.2 Duct Penetrations

Pack openings around ducts with mineral fiber insulation the full length of the penetration having a flame spread rating not more than 25 and a smoke developed rating not more than 50 when tested in accordance with ASTM E84. At each end of duct opening provide sealing collars and seal with an interior non-hardening compound.

3.1.10.3 Ducts Passing Through Equipment Rooms

Provide with sound insulation equal to the sound attenuation value of the wall, floor, or ceiling penetrated.

3.1.11 Machinery Foundations and Subbases

Provide cast in place anchor bolts as recommended by the machinery manufacturer.

3.1.11.1 Machinery Subbases

Provide concrete subbases at least 4 inches high for floor mounted equipment. Rest subbases on structural floor and reinforce with steel rods interconnected with floor reinforcing bars by tie bars hooked at both ends. Provide at least 2 inch clearance between subbases and inertia bases, steel bases, and steel saddles with machinery in operation.

3.1.11.2 Common Machinery Foundations

Mount electrical motors on the same foundations as driven machinery. Support piping connections, strainers, valves, and risers on the same foundation as the pumps.

3.1.11.3 Foundation and Subbase Concrete

Cast concrete foundations and subbases of ASTM C94/C94M concrete reinforced with steel bars as indicated or recommended by machinery manufacturer.

3.1.11.4 Anchor Bolts and Grout

Secure machinery to foundations and inertia bases with anchor bolts. Grout equipment with baseplates, the full area under baseplates with premixed non-shrinking grout. After grout has set, remove wedges, shims, and jack bolts and fill spaces with grout.

3.1.12 Inertia Bases

Install inertia bases in accordance with the recommendations of the machinery manufacturer or inertia base manufacturer, as applicable.

3.1.13 Suspended Machinery Platforms

Provide with vibration-isolation hangers.

3.1.14 Electrical Connections

Provide flexible conduit or multiple conductor cable connections for machinery with sufficient extra length to permit 2 inch minimum displacement in any direction without damage.

3.1.15 Systems Not To Be Vibration Isolated

Do not provide vibration isolation for electrical raceways and conduits or for fire protection, storm, sanitary, and domestic water piping systems which do not include pumps or other vibrating, rotating, or pulsating equipment including control and pressure reducing valves.

3.2 FIELD QUALITY CONTROL

Provide equipment and apparatus required for performing inspections and tests. Notify Contracting Officer 14 days prior to machinery testing. Rebalance, adjust, or replace machinery with noise or vibration levels in excess of those given in the machinery specifications, or machinery manufacturer's data.

3.2.1 Field Inspections

Prior to initial operation, inspect the vibration isolators for conformance to drawings, specifications, and manufacturer's data and instructions. Check for vibration and noise transmission through connections, piping, ductwork, foundations, and walls. Check connector alignment before and after filling of system and during operation. Correct misalignment without damage to connector and in accordance with manufacturer's recommendations.

3.2.2 Spring Isolator Inspection

After installation of spring isolators or protected spring isolators, and seismic restraint devices, the machinery shall rock freely on its spring isolators within limits of stops or seismic restraint devices. Eliminate or correct interferences.

3.2.3 Tests

Adjust, repair, or replace isolators as required to reduce vibration and noise transmissions to specified levels.

3.2.3.1 Equipment Vibration Tests

Perform vibration tests to determine conformance with vibration isolation schedule specified.

3.2.3.2 Equipment Sound Level Tests

Measure continuous or intermittent steady state noise with a sound level meter set for low response. Measure impact or impulse noise as dB peak sound pressure level (20 uPa) with an impact noise analyzer. Measure work distance from person to machinery noise center. Perform sound level tests to determine conformance with sound level schedule.

a. Interior Machinery Sound

In accordance with AHRI 575, measure the sound data for air conditioning and refrigeration machinery, such as fans, boilers, valves, engines, turbines, or transformers. Measure the sound pressure levels around mechanical and electrical machinery located in equipment spaces, 3 feet horizontally from the edge closest to the acoustical center of the machinery at points 3 feet and 5.5 feet above floor. Take measurements at the center of each side of the machinery. Locate the microphone at least 3 feet from the observer and measuring instruments. Observer shall not be between the machinery and the measuring instrument.

b. Exterior Machinery Sound

Measure sound data in accordance with ANSI/AHRI 370 for machinery radiating noise outside the building in such applications as grade installations, area-ways, wall and roof installations for cooling towers, refrigerant condensers, engine driven generator sets, fans, air conditioning machinery, heat pumps, evaporative coolers, exhaust silencers, and air intakes.

-- End of Section --

THIS PAGE HAS BEEN INTENTIONALLY LEFT BLANK

SECTION 23 00 00

AIR SUPPLY, DISTRIBUTION, VENTILATION, AND EXHAUST SYSTEMS
08/10

PART 1 GENERAL

1.1 REFERENCES

The publications listed below form a part of this specification to the extent referenced. The publications are referred to within the text by the basic designation only.

AIR MOVEMENT AND CONTROL ASSOCIATION INTERNATIONAL (AMCA)

AMCA 201	(2002; R 2011) Fans and Systems
AMCA 210	(2007) Laboratory Methods of Testing Fans for Aerodynamic Performance Rating
AMCA 300	(2014) Reverberant Room Method for Sound Testing of Fans
AMCA 301	(2014) Methods for Calculating Fan Sound Ratings from Laboratory Test Data

AMERICAN BEARING MANUFACTURERS ASSOCIATION (ABMA)

ABMA 11	(2014) Load Ratings and Fatigue Life for Roller Bearings
ABMA 9	(2015) Load Ratings and Fatigue Life for Ball Bearings

AMERICAN SOCIETY OF HEATING, REFRIGERATING AND AIR-CONDITIONING ENGINEERS (ASHRAE)

ASHRAE 62.1	(2010) Ventilation for Acceptable Indoor Air Quality
ASHRAE 70	(2006; R 2011) Method of Testing for Rating the Performance of Air Outlets and Inlets

ASME INTERNATIONAL (ASME)

ASME A13.1	(2015) Scheme for the Identification of Piping Systems

ASTM INTERNATIONAL (ASTM)

ASTM A123/A123M	(2017) Standard Specification for Zinc (Hot-Dip Galvanized) Coatings on Iron and Steel Products
ASTM A167	(2011) Standard Specification for Stainless and Heat-Resisting

	Chromium-Nickel Steel Plate, Sheet, and Strip
ASTM A53/A53M	(2018) Standard Specification for Pipe, Steel, Black and Hot-Dipped, Zinc-Coated, Welded and Seamless
ASTM A924/A924M	(2016) Standard Specification for General Requirements for Steel Sheet, Metallic-Coated by the Hot-Dip Process
ASTM B117	(2016) Standard Practice for Operating Salt Spray (Fog) Apparatus
ASTM B766	(1986; R 2015) Standard Specification for Electrodeposited Coatings of Cadmium
ASTM C553	(2013) Standard Specification for Mineral Fiber Blanket Thermal Insulation for Commercial and Industrial Applications
ASTM D1654	(2008; R 2016) Standard Test Method for Evaluation of Painted or Coated Specimens Subjected to Corrosive Environments
ASTM D3359	(2009; E 2010; R 2010) Measuring Adhesion by Tape Test
ASTM D3776/D3776M	(2009a; R 2013) Standard Test Method for Mass Per Unit Area (Weight) of Fabric
ASTM D520	(2000; R 2011) Zinc Dust Pigment
ASTM D737	(2004; R 2016) Standard Test Method for Air Permeability of Textile Fabrics
ASTM E2016	(2015) Standard Specification for Industrial Woven Wire Cloth

NATIONAL ELECTRICAL MANUFACTURERS ASSOCIATION (NEMA)

NEMA MG 1	(2016) Motors and Generators
NEMA MG 10	(2013) Energy Management Guide for Selection and Use of Fixed Frequency Medium AC Squirrel-Cage Polyphase Induction Motors
NEMA MG 11	(1977; R 2012) Energy Management Guide for Selection and Use of Single Phase Motors

NATIONAL FIRE PROTECTION ASSOCIATION (NFPA)

NFPA 701	(2015) Standard Methods of Fire Tests for Flame Propagation of Textiles and Films
NFPA 90A	(2015) Standard for the Installation of Air Conditioning and Ventilating Systems

SHEET METAL AND AIR CONDITIONING CONTRACTORS' NATIONAL ASSOCIATION (SMACNA)

SMACNA 1966	(2005) HVAC Duct Construction Standards Metal and Flexible, 3rd Edition
SMACNA 1981	(2008) Seismic Restraint Manual Guidelines for Mechanical Systems, 3rd Edition

U.S. DEPARTMENT OF ENERGY (DOE)

Energy Star	(1992; R 2006) Energy Star Energy Efficiency Labeling System (FEMP)

U.S. NATIONAL ARCHIVES AND RECORDS ADMINISTRATION (NARA)

40 CFR 82	Protection of Stratospheric Ozone
PL 109-58	Energy Policy Act of 2005 (EPAct05)

UNDERWRITERS LABORATORIES (UL)

UL 181	(2013) Factory-Made Air Ducts and Air Connectors
UL 2518	(2016) UL Standard for Safety Air Dispersion Systems - Firdt Edition
UL 6	(2007; Reprint Nov 2014) Electrical Rigid Metal Conduit-Steel
UL 705	(2004; Reprint Dec 2013) Standard for Power Ventilators
UL Bld Mat Dir	(2012) Building Materials Directory
UL Electrical Constructn	(2012) Electrical Construction Equipment Directory

1.2 SYSTEM DESCRIPTION

Furnish ductwork, piping offsets, fittings, and accessories as required to provide a complete installation. Coordinate the work of the different trades to avoid interference between piping, equipment, structural, and electrical work. Provide complete, in place, all necessary offsets in piping and ductwork, and all fittings, and other components, required to install the work as indicated and specified.

1.2.1 Mechanical Equipment Identification

The number of charts and diagrams shall be equal to or greater than the number of mechanical equipment rooms. Where more than one chart or diagram per space is required, mount these in edge pivoted, swinging leaf, extruded aluminum frame holders which open to 170 degrees.

1.2.1.1 Charts

Provide chart listing of equipment by designation numbers and capacities such as flow rates, pressure and temperature differences, heating and

cooling capacities, horsepower, pipe sizes, and voltage and current characteristics.

1.2.2 Service Labeling

Label equipment, including fans, air handlers, terminal units, etc. with labels made of self-sticking, plastic film designed for permanent installation. Labels shall be in accordance with the typical examples below:

SERVICE	LABEL AND TAG DESIGNATION
Air handling unit Number	AHU - _____
Control and instrument air	CONTROL AND INSTR.
Exhaust Fan Number	EF - _____
Dedicated Outside Air System	DOAS - _____
Heat pump Condensing Unit	HP - _____
Unit Heater	UH - _____
Ductless Split System	DSS - _____

Identify similar services with different temperatures or pressures. Where pressures could exceed 125 pounds per square inch, gage, include the maximum system pressure in the label. Label and arrow piping in accordance with the following:

a. Each point of entry and exit of pipe passing through walls.

b. Each change in direction, i.e., elbows, tees.

c. In congested or hidden areas and at all access panels at each point required to clarify service or indicated hazard.

d. In long straight runs, locate labels at distances within eyesight of each other not to exceed 75 feet. All labels shall be visible and legible from the primary service and operating area.

For Bare or Insulated Pipes	
for Outside Diameters of	Lettering
1/2 thru 1-3/8 inch	1/2 inch
1-1/2 thru 2-3/8 inch	3/4 inch
2-1/2 inch and larger	1-1/4 inch

1.2.3 Color Coding

Color coding of all piping systems shall be in accordance with ASME A13.1.

1.3 SUBMITTALS

Government approval is required for submittals with a "G" designation; submittals not having a "G" designation are for Contractor Quality Control approval. Submittals with an "S" are for inclusion in the Sustainability Notebook, in conformance to Section 01 33 29 SUSTAINABILITY REPORTING. Submit the following in accordance with Section 01 33 00 SUBMITTAL PROCEDURES:

SD-02 Shop Drawings

Detail Drawings; G

SD-03 Product Data

Metal Ductwork; G
Metallic Flexible Duct; G
Insulated Nonmetallic Flexible Duct Runouts; G
Duct Connectors; G
Duct Access Doors; G
Manual Balancing Dampers; G
Diffusers; G
Fabric Air Diffusers; G
Registers and Grilles; G
Louvers; G
Centrifugal Fans; G
In-Line Centrifugal Fans; G
Panel Type Power Wall Ventilators; G
Test Procedures

SD-06 Test Reports

Performance Tests; G

SD-07 Certificates

Ozone Depleting Substances

SD-08 Manufacturer's Instructions

Manufacturer's Installation Instructions; G
Operation and Maintenance Training; G

SD-10 Operation and Maintenance Data

Operation and Maintenance Manuals; G

Manual Balancing Dampers; G
Centrifugal Fans; G
In-Line Centrifugal Fans; G
Panel Type Power Wall Ventilators; G

SD-11 Closeout Submittals

Energy Efficient Equipment; S
Reduce Volatile Organic Compounds (VOC); S
Indoor Air Quality During Construction; S
Ozone Depleting Substances for Refrigerants; S

1.4 QUALITY ASSURANCE

Except as otherwise specified, approval of materials and equipment is based on manufacturer's published data.

a. Where materials and equipment are specified to conform to the standards of the Underwriters Laboratories, the label of or listing with reexamination in UL Bld Mat Dir, and UL 6 is acceptable as sufficient evidence that the items conform to Underwriters Laboratories requirements. In lieu of such label or listing, submit a written certificate from any nationally recognized testing agency, adequately equipped and competent to perform such services, stating that the items have been tested and that the units conform to the specified requirements. Outline methods of testing used by the specified agencies.

b. Where materials or equipment are specified to be constructed or tested, or both, in accordance with the standards of the ASTM International (ASTM), the ASME International (ASME), or other standards, a manufacturer's certificate of compliance of each item is acceptable as proof of compliance.

c. Conformance to such agency requirements does not relieve the item from compliance with other requirements of these specifications.

d. Where products are specified to meet or exceed the specified energy efficiency requirement of FEMP-designated or Energy Star certified product categories, equipment selected shall have as a minimum the efficiency rating identified under "Energy-Efficient Products" at http://www1.eere.energy.gov/femp/procurement.

   These specifications conform to the efficiency requirements as defined in Public Law PL 109-58, "Energy Policy Act of 2005" for federal procurement of energy-efficient products. Equipment having a lower efficiency than Energy Star or FEMP requirements may be specified if the designer determines the equipment to be more life-cycle cost effective using the life-cycle cost analysis methodology and procedure in 10 CFR 436.

1.4.1 Prevention of Corrosion

Protect metallic materials against corrosion. Manufacturer shall provide rust-inhibiting treatment and standard finish for the equipment enclosures. Do not use aluminum in contact with earth, and where connected to dissimilar metal. Protect aluminum by approved fittings, barrier material, or treatment. Ferrous parts such as anchors, bolts, braces, boxes, bodies, clamps, fittings, guards, nuts, pins, rods, shims, thimbles, washers, and miscellaneous parts not of corrosion-resistant steel or nonferrous materials shall be hot-dip galvanized in accordance with ASTM A123/A123M for exterior locations and cadmium-plated in conformance with ASTM B766 for interior locations.

1.4.2 Asbestos Prohibition

Do not use asbestos and asbestos-containing products.

1.4.3 Ozone Depleting Substances Used as Refrigerants

Minimize releases of Ozone Depleting Substances (ODS) during repair, maintenance, servicing or disposal of appliances containing ODS's by complying with all applicable sections of 40 CFR 82 Part 82 Subpart F. Any person conducting repair, maintenance, servicing or disposal of equipment containing refrigerants must comply with the following:

a. Do not knowingly vent or otherwise release into the environment, Class I or Class II substances used as a refrigerant.

b. Do not open appliances without meeting the requirements of 40 CFR 82 Part 82.156 Subpart F, regarding required practices for evacuation and collection of refrigerant, and 40 CFR 82 Part 82.158 Subpart F, regarding standards of recycling and recovery equipment.

c. Only persons who comply with 40 CFR 82 Part 82.161 Subpart F, regarding technician certification, can conduct work on appliances containing refrigerant.

In addition, provide copies of all applicable certifications to the Contracting Officer at least 14 calendar days prior to initiating maintenance, repair, servicing, dismantling or disposal of appliances, including:

a. Proof of Technician Certification

b. Proof of Equipment Certification for recovery or recycling equipment.

c. Proof of availability of certified recovery or recycling equipment.

1.4.4 Use of Ozone Depleting Substances, Other than Refrigerants

The use of Class I or Class II ODS's listed as nonessential in 40 CFR 82 Part 82.66 Subpart C is prohibited. These prohibited materials and uses include:

a. Any plastic party spray streamer or noise horn which is propelled by a chlorofluorocarbon

b. Any cleaning fluid for electronic and photographic equipment which contains a chlorofluorocarbon; including liquid packaging, solvent wipes, solvent sprays, and gas sprays.

c. Any plastic flexible or packaging foam product which is manufactured with or contains a chlorofluorocarbon, including, open cell foam, open cell rigid polyurethane poured foam, closed cell extruded polystyrene sheet foam, closed cell polyethylene foam and closed cell polypropylene foam except for flexible or packaging foam used in coaxial cabling.

d. Any aerosol product or other pressurized dispenser which contains a chlorofluorocarbon, except for those listed in 40 CFR 82 Part 82.66 Subpart C.

Request a waiver if a facility requirement dictates that a prohibited material is necessary to achieve project goals. Submit the waiver request in writing to the Contracting Officer. The waiver will be evaluated and dispositioned.

1.4.5 Detail Drawings

Submit detail drawings showing equipment layout, including assembly and installation details and electrical connection diagrams; ductwork layout showing the location of all supports and hangers, typical hanger details, gauge reinforcement, reinforcement spacing rigidity classification, and static pressure and seal classifications. Include any information required to demonstrate that the system has been coordinated and functions properly as a unit on the drawings and show equipment relationship to other parts of the work, including clearances required for operation and maintenance. Submit drawings showing bolt-setting information, and foundation bolts prior to concrete foundation construction for all equipment indicated or required to have concrete foundations. Submit function designation of the equipment and any other requirements specified throughout this Section with the shop drawings.

1.4.6 Test Procedures

Submit proposed test procedures and test schedules for the performance tests of systems, at least 2 weeks prior to the start of related testing.

1.5 DELIVERY, STORAGE, AND HANDLING

Protect stored equipment at the jobsite from the weather, humidity and temperature variations, dirt and dust, or other contaminants. Additionally, cap or plug all pipes until installed.

PART 2 PRODUCTS

2.1 PRODUCT SUSTAINABILITY CRITERIA

For products in this section, where applicable and to extent allowed by performance criteria, provide and document the following:

2.1.1 Energy Efficient Equipment

Provide documentation in conformance with Section 01 33 29 SUSTAINABILITY REPORTING paragraph ENERGY EFFICIENT EQUIPMENT that the following products meet energy efficiency requirements as outlined in this section:

a. Centrifugal Fans
b. In-Line Centrifugal Fans
c. Panel Type Power Wall Ventilators

2.1.2 Reduce Volatile Organic Compounds (VOC) for sealants, coatings or adhesives

Low or no VOC's and no added urea formaldehyde for duct sealants, coatings or adhesives, in conformance with Section 01 33 29 SUSTAINABILITY REPORTING paragraph REDUCE VOLATILE ORGANIC COMPOUNDS (VOC).

2.1.3 Ozone Depleting Substances for Refrigerants

Do not use any Ozone Depleting Substances (ODS) as Refrigerants per requirements in 01 33 29 SUSTAINABILITY REPORTING paragraph OZONE DEPLETING SUBSTANCES.

2.2 STANDARD PRODUCTS

Except for the fabricated duct, plenums and casings specified in

paragraphs "Metal Ductwork" and "Plenums and Casings for Field-Fabricated Units",
provide components and equipment that are standard products of manufacturers regularly engaged in the manufacturing of products that are of a similar material, design and workmanship. This requirement applies to all equipment, including diffusers, registers, fire dampers, and balancing dampers. All energy consuming HVAC equipment must be Energy Star or Federal Energy management Program (FEMP) designated efficiency in conformance to Section 01 33 29 SUSTAINABILITY REPORTING paragraph ENERGY EFFICIENT EQUIPMENT.

a. Standard products are defined as components and equipment that have been in satisfactory commercial or industrial use in similar applications of similar size for at least two years before bid opening.

b. Prior to this two year period, these standard products shall have been sold on the commercial market using advertisements in manufacturers' catalogs or brochures. These manufacturers' catalogs, or brochures shall have been copyrighted documents or have been identified with a manufacturer's document number.

c. Provide equipment items that are supported by a service organization. In product categories covered by Energy Star or the Federal Energy Management Program, provide equipment that is listed on the Energy Star Qualified Products List or that meets or exceeds the FEMP-designated Efficiency Requirements.

2.3 IDENTIFICATION PLATES

In addition to standard manufacturer's identification plates, provide engraved laminated phenolic identification plates for each piece of mechanical equipment. Identification plates are to designate the function of the equipment. Submit designation with the shop drawings. Identification plates shall be three layers, black-white-black, engraved to show white letters on black background. Letters shall be upper case. Identification plates 1-1/2-inches high and smaller shall be 1/16-inch thick, with engraved lettering 1/8-inch high; identification plates larger than 1-1/2-inches high shall be 1/8-inch thick, with engraved lettering of suitable height. Identification plates 1-1/2-inches high and larger shall have beveled edges. Install identification plates using a compatible adhesive.

2.4 EQUIPMENT GUARDS AND ACCESS

Fully enclose or guard belts, pulleys, chains, gears, couplings, projecting setscrews, keys, and other rotating parts exposed to personnel contact according to OSHA requirements. Properly guard or cover with insulation of a type specified, high temperature equipment and piping exposed to contact by personnel or where it creates a potential fire hazard.

2.5 ELECTRICAL WORK

a. Provide motors, controllers, integral disconnects, contactors, and controls with their respective pieces of equipment, except controllers indicated as part of motor control centers. Provide electrical equipment, including motors and wiring, as specified in Section 26 20 00INTERIOR DISTRIBUTION SYSTEM. Provide manual or automatic

control and protective or signal devices required for the operation specified and control wiring required for controls and devices specified, but not shown. For packaged equipment, include manufacturer provided controllers with the required monitors and timed restart.

b. For single-phase motors, provide high-efficiency type, fractional-horsepower alternating-current motors, including motors that are part of a system, in accordance with NEMA MG 11. Integral size motors shall be the premium efficiency type in accordance with NEMA MG 1.

c. For polyphase motors, provide squirrel-cage medium induction motors, including motors that are part of a system, and that meet the efficiency ratings for premium efficiency motors in accordance with NEMA MG 1. Select premium efficiency polyphase motors in accordance with NEMA MG 10.

d. Provide motors in accordance with NEMA MG 1 and of sufficient size to drive the load at the specified capacity without exceeding the nameplate rating of the motor. Provide motors rated for continuous duty with the enclosure specified. Provide motor duty that allows for maximum frequency start-stop operation and minimum encountered interval between start and stop. Provide motor torque capable of accelerating the connected load within 20 seconds with 80 percent of the rated voltage maintained at motor terminals during one starting period. Provide motor starters complete with thermal overload protection and other necessary appurtenances. Fit motor bearings with grease supply fittings and grease relief to outside of the enclosure.

e. Where two-speed or variable-speed motors are indicated, solid-state variable-speed controllers are allowed to accomplish the same function. Use solid-state variable-speed controllers for motors rated 10 hp or less and adjustable frequency drives for larger motors. Provide variable frequency drives for motors as specified in Section 23 09 00.00 22 INSTRUMENTATION AND CONTROL FOR HVAC.

2.6 ANCHOR BOLTS

Provide anchor bolts for equipment placed on concrete equipment pads or on concrete slabs. Bolts to be of the size and number recommended by the equipment manufacturer and located by means of suitable templates. Installation of anchor bolts shall not degrade the surrounding concrete.

2.7 SEISMIC ANCHORAGE

Anchor equipment in accordance with applicable seismic criteria for the area and as defined in SMACNA 1981

2.8 PAINTING

Paint equipment units in accordance with approved equipment manufacturer's standards unless specified otherwise. Field retouch only if approved. Otherwise, return equipment to the factory for refinishing.

2.9 INDOOR AIR QUALITY

Provide equipment and components that comply with the requirements of ASHRAE 62.1 unless more stringent requirements are specified herein.

2.10 DUCT SYSTEMS

2.10.1 Metal Ductwork

Provide metal ductwork construction, including all fittings and components, that complies with SMACNA 1966, as supplemented and modified by this specification.

a. Ductwork shall be constructed meeting the requirements for the duct system static pressure specified in APPENDIX D of Section 23 05 93.00 22 TESTING, ADJUSTING AND BALANCING FOR MECHANICAL SYSTEMS.

b. Provide radius type elbows with a centerline radius of 1.5 times the width or diameter of the duct where space permits. Otherwise, elbows having a minimum radius equal to the width or diameter of the duct or square elbows with factory fabricated turning vanes are allowed.

c. Provide ductwork that meets the requirements of Seal Class A. Provide ductwork in VAV systems upstream of the VAV boxes that meets the requirements of Seal Class A.

d. Provide sealants that conform to fire hazard classification specified in Section 23 07 00 THERMAL INSULATION FOR MECHANICAL SYSTEMS and are suitable for the range of air distribution and ambient temperatures to which it is exposed. Do not use pressure sensitive tape as a sealant.

e. Make spiral lock seam duct, and flat oval with duct sealant and lock with not less than 3 equally spaced drive screws or other approved methods indicated in SMACNA 1966. Apply the sealant to the exposed male part of the fitting collar so that the sealer is on the inside of the joint and fully protected by the metal of the duct fitting. Apply one brush coat of the sealant over the outside of the joint to at least 2 inch band width covering all screw heads and joint gap. Dents in the male portion of the slip fitting collar are not acceptable. Fabricate outdoor air intake ducts and plenums with watertight soldered or brazed joints and seams.

f. All exposed round or oval duct shown on the drawings shall consist of double wall spiral lockseam factory fabricated duct with 1" of fiberglass insulation between the solid sheetmetal outer wall and the solid sheetmetal inner wall.

2.10.1.1 Metallic Flexible Duct

a. Provide duct that conforms to UL 181 and NFPA 90A with factory-applied insulation, vapor barrier, and end connections. Provide duct assembly that does not exceed 25 for flame spread and 50 for smoke developed. Provide ducts designed for working pressures of 2 inches water gauge positive and 1.5 inches water gauge negative. Provide flexible round duct length that does not exceed 5 feet. Secure connections by applying adhesive for 2 inches over rigid duct, apply flexible duct 2 inches over rigid duct, apply metal clamp, and provide minimum of three No. 8 sheet metal screws through clamp and rigid duct.

b. Inner duct core: Provide interlocking spiral or helically corrugated flexible core constructed of zinc-coated steel, aluminum, or stainless steel; or constructed of inner liner of continuous galvanized spring

steel wire helix fused to continuous, fire-retardant, flexible vapor barrier film, inner duct core.

c. Insulation: Provide inner duct core that is insulated with mineral fiber blanket type flexible insulation, minimum of 1 inch thick. Provide insulation covered on exterior with manufacturer's standard fire retardant vapor barrier jacket for flexible round duct.

2.10.1.2 Insulated Nonmetallic Flexible Duct Runouts

Use flexible duct runouts only where indicated. Runout length is indicated on the drawings, and is not to exceed 5 feet. Provide runouts that are preinsulated, factory fabricated, and that comply with NFPA 90A and UL 181. Provide either field or factory applied vapor barrier. Provide not less than 20 ounce glass fabric duct connectors coated on both sides with neoprene. Where coil induction or high velocity units are supplied with vertical air inlets, use a streamlined, vaned and mitered elbow transition piece for connection to the flexible duct or hose. Provide a die-stamped elbow and not a flexible connector as the last elbow to these units other than the vertical air inlet type. Insulated flexible connectors are allowed as runouts. Provide insulated material and vapor barrier that conform to the requirements of Section 23 07 00 THERMAL INSULATION FOR MECHANICAL SYSTEMS. Do not expose the insulation material surface to the air stream.

2.10.1.3 General Service Duct Connectors

Provide a flexible duct connector approximately 6 inches in width where sheet metal connections are made to fans or where ducts of dissimilar metals are connected. For round/oval ducts, secure the flexible material by stainless steel or zinc-coated, iron clinch-type draw bands. For rectangular ducts, install the flexible material locked to metal collars using normal duct construction methods. Provide a composite connector system that complies with NFPA 701 and is classified as "flame-retardent fabrics" in UL Bld Mat Dir.

2.10.2 Duct Access Doors

Provide hinged access doors conforming to SMACNA 1966 in ductwork and plenums where indicated and at all air flow measuring primaries, automatic dampers, fire dampers, coils, thermostats, and other apparatus requiring service and inspection in the duct system. Provide access doors upstream and downstream of air flow measuring primaries and heating and cooling coils. Provide doors that are a minimum 15 by 18 inches, unless otherwise shown. Where duct size does not accommodate this size door, make the doors as large as practicable. Equip doors 24 by 24 inches or larger with fasteners operable from inside and outside the duct. Use insulated type doors in insulated ducts.

2.10.3 Manual Balancing Dampers

a. Furnish factory manufactured and assembled manual balancing dampers with accessible locking-type quadrant operators. Manufacturer must publish damper data sheets and dampers must be sold on the open market. Use chromium plated operators (with all exposed edges rounded) in finished portions of the building where ductwork is exposed.

b. Furnish stand-off mounting brackets, bases, or adapters, not less than

the thickness of the insulation, to provide clearance between the duct surface and the operator. Stand-off mounting items are to be integral with the operator or standard accessory of the damper manufacturer. For duct widths greater than 30 inches, provide locking regulator at each end of the damper shaft.

c. Dampers installed in ductwork with an air velocity of over 1500 fpm, and/or pressure class greater than 2 inches must be rated for the design velocity and pressure class indicated.

2.10.3.1 Single Blade Round Dampers:

a. May be furnished up to 20 inches in diameter.

b. Provide a minimum 3/8 inch square continuous full length galvanized or plated steel axle shaft that supports the entire blade diameter and extends through the standoff bracket and quadrant operator. Firmly affix the axle shaft to the blade. Spring-loaded positioners are not permitted.

c. Must be factory fabricated in a frame with a minimum length of 6 inches made of galvanized steel with strengthening ribs; minimum of 22 gage up to 8 inch diameter, and 20 gage above 8 inch diameter. Damper frames are to be mounted end to end with round duct. Support the axle shaft on both ends with a pressed in elastomeric bearing/seal, for low infiltration/exfiltration air leakage.

d. Provide galvanized steel damper blade; minimum of 22 gage up to 8 inch diameter, and 20 gage above 8 inch diameter.

2.10.3.2 Single Blade Rectangular Dampers:

a. May be furnished up to 12 inches in height for rectangular ducts.

b. Provide square galvanized or plated steel axle shaft(s) that support the blade at both ends and extends through the standoff bracket and quadrant operator; minimum 3/8 inch up to 19 inch blade length, and 1/2 inch over 19 inch blade length. Firmly affix the axle shaft(s) to the blade. Spring-loaded positioners are not permitted. Provide, at the duct wall shaft penetration, an elastomeric seal for low infiltration/exfiltration air leakage.

c. Must be factory fabricated in a frame with a minimum length 3 inches made of galvanized steel; minimum of 24 gage up to 19 inch blade length, and 22 gage over 19 inch blade length. Damper frames are to be mounted inside the duct. Support axle shaft on both ends with a bearing in the frame.

d. Provide damper blades made of galvanized steel with roll formed or broke stiffener(s); minimum of 20 gage up to 19inch blade length, and 18 gage over 19 inch blade length.

2.10.3.3 Multi-Blade Rectangular Dampers:

a. Furnish for round ducts larger than 20 inches and rectangular ducts greater than 12 inches in height, except flanged duct systems. Furnish square to round transitions for application in round duct.

b. Provide 1/2 inch galvanized or plated steel axle shafts that support

each blade at both ends. Operator shaft shall extend thru the standoff bracket and quadrant operator. An elastomeric seal for low infiltration/exfiltration air leakage must be at the duct wall shaft penetration.

c. Must be factory fabricated in a frame with a minimum length of 5 inches made of minimum 16 gage galvanized steel. Damper frames are to be mounted inside the duct. Support axle shafts on both ends with a bearing in the frame. Blade linkage must be galvanized or plated steel and concealed in the frame, out of the air stream.

d. Provide opposed blades made of galvanized steel with roll formed or broke stiffener(s); minimum of 16 gage.

2.10.3.4 Rectangular Dampers for Flanged Duct:

a. Provide for flanged duct systems.

b. Must be multi-blade rectangular.

c. Provide 1/2 inch galvanized or plated steel axle shafts that support each blade at both ends. Operator shaft shall extend thru the standoff bracket and quadrant operator.

d. Must be factory fabricated in a frame with a minimum length of 3 inches made galvanized steel with a thickness to match the duct and at least 16 gage, or 20 gage with additional reinforcing such as a C channel. Mount damper frames end to end with the duct. Support axle shafts on both ends with a pressed in elastomeric bearing/seal for low infiltration/exfiltration air leakage. Provide galvanized or plated steel blade linkage, concealed in the frame, out of the air stream.

e. Provide opposed blades made of galvanized steel with roll formed or broke stiffener(s); minimum of 16 gage.

2.10.4 Automatic Balancing Dampers

Provide dampers as specified in paragraph SUPPLEMENTAL COMPONENTS/SERVICES, subparagraph CONTROLS.

2.10.5 Plenums and Casings for Field-Fabricated Units

2.10.5.1 Plenum and Casings

Fabricate and erect plenums and casings as shown in SMACNA 1966, as applicable. Construct system casing of not less than 16 gauge galvanized sheet steel. Furnish cooling coil drain pans with 1 inch threaded outlet to collect condensation from the cooling coils. Fabricate drain pans from not lighter than 16 gauge steel, galvanized after fabrication or of 18 gauge corrosion-resisting sheet steel conforming to ASTM A167, Type 304, welded and stiffened. Thermally insulate drain pans exposed to the atmosphere to prevent condensation. Coat insulation with a flame resistant waterproofing material. Provide separate drain pans for each vertical coil section, and a separate drain line for each pan. Size pans to ensure capture of entrained moisture on the downstream-air side of the coil. Seal openings in the casing, such as for piping connections, to prevent air leakage. Size the water seal for the drain to maintain a pressure of at least 2 inch water gauge greater than the maximum negative pressure in the coil space.

2.10.5.2 Casing

Terminate casings at the curb line and bolt each to the curb using galvanized angle, as indicated in SMACNA 1966.

2.10.5.3 Access Doors

Provide access doors in each section of the casing. Weld doorframes in place, gasket each door with neoprene, hinge with minimum of two brass hinges, and fasten with a minimum of two brass tension fasteners operable from inside and outside of the casing. Where possible, make doors 36 by 18 inches and locate them 18 inches above the floor. Where the space available does not accommodate doors of this size, use doors as large as the space accommodates. Swing doors so that fan suction or pressure holds doors in closed position, airtight. Provide a push-button station, located inside the casing, to stop the supply.

2.10.5.4 Factory-Fabricated Insulated Sheet Metal Panels

Factory-fabricated components are allowed for field-assembled units, provided all requirements specified for field-fabricated plenums and casings are met. Provide panels of modular design, pretested for structural strength, thermal control, condensation control, and acoustical control. Seal and insulate panel joints. Provide and gasket access doors to prevent air leakage. Provide panel construction that is not less than 20 gauge galvanized sheet steel, assembled with fasteners treated against corrosion. Provide standard length panels that deflect not more than 1/2 inch under operation. Construct details, including joint sealing, not specifically covered, as indicated in SMACNA 1966. Construct the plenums and casings to withstand the specified internal pressure of the air systems.

2.10.5.5 Duct Liner

Unless otherwise specified, duct liner is not permitted.

2.10.6 Diffusers, Registers, and Grilles

Provide factory-fabricated units of aluminum that distribute the specified quantity of air evenly over space intended without causing noticeable drafts, air movement faster than 50 fpm in occupied zone, or dead spots anywhere in the conditioned area. Provide outlets for diffusion, spread, throw, and noise level as required for specified performance. Certify performance according to ASHRAE 70. Provide sound rated and certified inlets and outlets according to ASHRAE 70. Provide sound power level as indicated. Provide diffusers and registers with volume damper with accessible operator, unless otherwise indicated; or if standard with the manufacturer, an automatically controlled device is acceptable. Provide opposed blade type volume dampers for all diffusers and registers, except linear slot diffusers. Provide linear slot diffusers with round or elliptical balancing dampers. Where the inlet and outlet openings are located less than 7 feet above the floor, protect them by a grille or screen according to NFPA 90A.

2.10.6.1 Diffusers

Provide diffuser types indicated. Furnish ceiling mounted units with anti-smudge devices, unless the diffuser unit minimizes ceiling smudging

through design features. Provide diffusers with air deflectors of the type indicated. Provide air handling troffers or combination light and ceiling diffusers conforming to the requirements of UL Electrical Constructn for the interchangeable use as cooled or heated air supply diffusers or return air units. Install ceiling mounted units with rims tight against ceiling. Provide sponge rubber gaskets between ceiling and surface mounted diffusers for air leakage control. Provide suitable trim for flush mounted diffusers. For connecting the duct to diffuser, provide duct collar that is airtight and does not interfere with volume controller. Provide return or exhaust units that are similar to supply diffusers.

2.10.6.2 Registers and Grilles

Provide units that are four-way directional-control type, except provide return and exhaust registers that are fixed horizontal or vertical louver type similar in appearance to the supply register face. Furnish registers with sponge-rubber gasket between flanges and wall or ceiling. Install wall supply registers at least 6 inches below the ceiling unless otherwise indicated. Locate return and exhaust registers 6 inches above the floor unless otherwise indicated. Achieve four-way directional control by a grille face which can be rotated in 4 positions or by adjustment of horizontal and vertical vanes. Provide grilles as specified for registers, without volume control damper.

2.10.6.3 Fabric Air Diffusers

Provide fabric air diffusing system supported by an internal metal skeleton that keeps the fabric drawn tight at all times. The fabric Air Diffuser is to be classified by Underwriter's Laboratories in accordance with the 25/50 flame apread / smoke developed requirements of NFPA 90A and UL 2518.

2.10.6.3.1 Fabric Tensioning System

Air diffusers to be constructed with internal tensioning frame.

a. System to cylindrically tension textile along the entire length of textile duct, including all fittings(crosses, elbows, reducers and tees).

b. Tensioning system to include full 360 degree tensioning and intermediate rings with quick connection spacer tubes concealed inside the fabric system.

c. Interior structure to include multiple mechanically adjustable tension devices. To provide proper textile tensioning, structural and textile system to be configured in segments of no more than 45 feet.

d. Textile components supported solely by metal cylindrical rings.

e. Each cylindrical ring to require a vertical metal to metal cable safety attachment. Vertical supports are to be Galvanized steel.

2.10.6.3.2 Fabric Material

Textile Construction (P-1481) - Porous Fabric: Filament/filament twill polyester treated with a machine washable anti-microbial agent by the fabric manufacturer, fire retardant in accordance with UL 2518.

Non-linting filament yarn to meet the requirements of ISO Class 3 environment.Custom color fabric.

a. Air Permeability: 2 CFM per square feet per ASTM D737, Frazier

b. Weight: 6.8 oz. per square yard per ASTM D3776/D3776M

c. Adjustable Nozzles:

1. Air dispersion accomplished by adjustable ball nozzles and permeable fabric. Adjustable ball nozzles to have multiaxial rotation to redirect airflow to desired area. Adjustable ball nozzles are able to completely close off airflow without adding caps or plugs. Adjustable ball nozzles should lock into place once set, preventing constant adjustment. Adjustable ball nozzle should have inset design to be a condensation resistant product. Color of nozzles to match color of fabric unless otherwise indicated.

2. Location and number of nozzles to be as indicated and as approved by manufacturer.

Textile Construction (P-1482) - Non-porous Fabric: Woven polyester with non-permeable coating, fire retardant in accordance with UL 2518. Custom color fabric.

a. Air Permeability: 0 CFM per square feet per ASTM D737, Frazier

b. Weight: 8.2 oz. per square yard per ASTM D3776/D3776M

c. Orifices:

1. Air dispersion and extended throws are accomplished by reinforced orifices. Reinforced orifices are to be installed to keep the integrity of opening and withstand laundry processes.

2. Diameter, quantity, and location of reinforced orifices to be as indicated and as approved by the manufacturer.

2.10.6.3.3 Warranty

Provide a manufacturer's 20 Year Product Warranty for products supplied for the fabric portion of this system as well as a Design and Performance Warranty.

2.10.6.3.4 Submittal Requirements

Include in the submittal package the following:

a. Product Data: Submit manufacturer's materials and specifications on the products proposed for use.

b. Building Code Data: submit UL file number under which the product is Classified by Underwriter's Laboratories for both NFPA 90A and UL 2518.

c. Submit detailed drawings confirming configuration of of Fabric Tensioning System (components, support locations, segment lengths) and Textile Dispersion System (diameter, lengths, airflow, pressure, and textile permeability).

d. Provide detailed installation instructions for installation of the components to be installed.

e. Provide warranty and maintenance documentation.

2.10.7 Louvers

Provide louvers for installation in exterior walls that are associated with the air supply and distribution system as specified in Section 08 91 00 METAL WALL LOUVERS.

2.10.8 Bird Screens and Frames

Provide bird screens that conform to ASTM E2016, No. 2 mesh, aluminum or stainless steel. Provide "medium-light" rated aluminum screens. Provide "light" rated stainless steel screens. Provide removable type frames fabricated from either stainless steel or extruded aluminum.

2.11 AIR SYSTEMS EQUIPMENT

2.11.1 Fans

Test and rate fans according to AMCA 210. Calculate system effect on air moving devices in accordance with AMCA 201 where installed ductwork differs from that indicated on drawings. Install air moving devices to minimize fan system effect. Where system effect is unavoidable, determine the most effective way to accommodate the inefficiencies caused by system effect on the installed air moving device. The sound power level of the fans shall not exceed 85 dBA when tested according to AMCA 300 and rated in accordance with AMCA 301. Provide all fans with an AMCA seal. Connect fans to the motors either directly or indirectly with V-belt drive. Provide fans with personnel screens or guards on both suction and supply ends, except that the screens need not be provided, unless otherwise indicated, where ducts are connected to the fan. Provide fan and motor assemblies with vibration-isolation supports or mountings as indicated. Use vibration-isolation units that are standard products with published loading ratings. Select each fan to produce the capacity required at the fan static pressure indicated. Provide sound power level as indicated. Obtain the sound power level values according to AMCA 300. Provide standard AMCA arrangement, rotation, and discharge as indicated. Provide power ventilators that conform to UL 705 and have a UL label.

2.11.1.1 Centrifugal Fans

Provide fully enclosed, single-width single-inlet, or double-width double-inlet centrifugal fans, with AMCA Pressure Class I, II, or III as required or indicated for the design system pressure. Provide impeller wheels that are rigidly constructed and accurately balanced both statically and dynamically. Provide forward curved or backward-inclined airfoil design fan blades in wheel sizes up to 30 inches. Provide fan wheels over 36 inches in diameter with overhung pulleys and a bearing on each side of the wheel. Provide fan wheels 36 inches or less in diameter that have one or more extra long bearings between the fan wheel and the drive. Provide sleeve type, self-aligning and self-oiling bearings with oil reservoirs, or precision self-aligning roller or ball-type with accessible grease fittings or permanently lubricated type. Connect grease fittings to tubing for serviceability from a single accessible point. Provide L50 rated bearing life at not less than 200,000 hours as defined

by ABMA 9 and ABMA 11. Provide steel, accurately finished fan shafts, with key seats and keys for impeller hubs and fan pulleys. Provide fan outlets of ample proportions, designed for the attachment of angles and bolts for attaching flexible connections. Unless otherwise indicated, provide motors that do not exceed 1800 rpm and have dripproof enclosures. Provide magnetic across-the-line type motor starters with general-purpose enclosure.

2.11.1.2 In-Line Centrifugal Fans

Provide in-line fans with centrifugal backward inclined blades, stationary discharge conversion vanes, internal and external belt guards, and adjustable motor mounts. Mount fans in a welded tubular casing. Provide a fan that axially flows the air in and out. Streamline inlets with conversion vanes to eliminate turbulence and provide smooth discharge air flow. Enclose and isolate fan bearings and drive shafts from the air stream. Provide precision, self aligning ball or roller type fan bearings that are sealed against dust and dirt and are permanently lubricated. Provide L50 rated bearing life at not less than 200,000 hours as defined by ABMA 9 and ABMA 11. Provide motors with dripproof enclosure. Provide magnetic motor starters across-the-line with general-purpose enclosures.

2.11.1.3 Panel Type Power Wall Ventilators

Provide propeller type fans, assembled on a reinforced metal panel with venturi opening spun into panel. Provide direct or V-belt driven fans with wheels less than 24 inches in diameter and provide V-belt driven fans with wheels 24 inches in diameter and larger. Provide fans with wall mounting collar. Provide lubricated bearings. Equip fans with wheel and motor side metal or wire guards which have a corrosion-resistant finish. Provide dripproof type motor enclosure. Install motor operated backdraft dampers where indicated.

2.12 FACTORY PAINTING

Factory paint new equipment, which are not of galvanized construction. Paint with a corrosion resisting paint finish according to ASTM A123/A123M or ASTM A924/A924M. Clean, phosphatize and coat internal and external ferrous metal surfaces with a paint finish which has been tested according to ASTM B117, ASTM D1654, and ASTM D3359. Submit evidence of satisfactory paint performance for a minimum of 125 hours for units to be installed indoors and 3000 hours for units to be installed outdoors. Provide rating of failure at the scribe mark that is not less than 6, average creepage not greater than 1/8 inch. Provide rating of the inscribed area that is not less than 10, no failure. On units constructed of galvanized steel that have been welded, provide a final shop docket of zinc-rich protective paint on exterior surfaces of welds or welds that have burned through from the interior according to ASTM D520 Type I.

Factory painting that has been damaged prior to acceptance by the Contracting Officer shall be field painted in compliance with the requirements of paragraph FIELD PAINTING OF MECHANICAL EQUIPMENT.

2.13 SUPPLEMENTAL COMPONENTS/SERVICES

2.13.1 Insulation

The requirements for shop and field applied insulation are specified in Section 23 07 00 THERMAL INSULATION FOR MECHANICAL SYSTEMS.

2.13.2 Controls

The requirements for controls are specified in 23 09 00.00 22 INSTRUMENTATION AND CONTROL FOR HVAC.

PART 3 EXECUTION

3.1 CONSTRUCTION-RELATED SUSTAINABILITY CRITERIA

Perform and document Indoor Air Quality During Construction. Provide documentation showing that after construction ends, and prior to occupancy, new filters were installed in conformance with Section 01 33 29 SUSTAINABILITY REPORTING paragraph INDOOR AIR QUALITY DURING CONSTRUCTION.

3.2 EXAMINATION

After becoming familiar with all details of the work, verify all dimensions in the field, and advise the Contracting Officer of any discrepancy before performing the work.

3.3 INSTALLATION

a. Install materials and equipment in accordance with the requirements of the contract drawings and approved manufacturer's installation instructions. Accomplish installation by workers skilled in this type of work. Perform installation so that there is no degradation of the designed fire ratings of walls, partitions, ceilings, and floors.

b. No installation is permitted to block or otherwise impede access to any existing machine or system. Install all hinged doors to swing open a minimum of 120 degrees. Provide an area in front of all access doors that clears a minimum of 3 feet. In front of all access doors to electrical circuits, clear the area the minimum distance to energized circuits as specified in OSHA Standards, part 1910.333 (Electrical-Safety Related work practices)and an additional 3 feet.

c. Except as otherwise indicated, install emergency switches and alarms in conspicuous locations. Mount all indicators, to include gauges, meters, and alarms in order to be easily visible by people in the area.

3.3.1 Condensate Drain Lines

Provide water seals in the condensate drain from all units. Provide a depth of each seal of 2 inches plus the number of inches, measured in water gauge, of the total static pressure rating of the unit to which the drain is connected. Provide water seals that are constructed of 2 tees and an appropriate U-bend with the open end of each tee plugged. Provide pipe cap or plug cleanouts where indicated. Connect drains indicated to connect to the sanitary waste system using an indirect waste fitting. Insulate air conditioner drain lines as specified in Section 23 07 00 THERMAL INSULATION FOR MECHANICAL SYSTEMS.

3.3.2 Equipment and Installation

Provide frames and supports for tanks, compressors, pumps, valves, air handling units, fans, coils, dampers, and other similar items requiring supports. Floor mount or ceiling hang air handling units as indicated. Anchor and fasten as detailed. Set floor-mounted equipment on not less

than 6 inch concrete pads or curbs doweled in place unless otherwise indicated. Make concrete foundations heavy enough to minimize the intensity of the vibrations transmitted to the piping, duct work and the surrounding structure, as recommended in writing by the equipment manufacturer. In lieu of a concrete pad foundation, build a concrete pedestal block with isolators placed between the pedestal block and the floor. Make the concrete foundation or concrete pedestal block a mass not less than three times the weight of the components to be supported. Provide the lines connected to the pump mounted on pedestal blocks with flexible connectors. Submit foundation drawings as specified in paragraph DETAIL DRAWINGS. Provide concrete for foundations as specified in Section 03 30 00 CAST-IN-PLACE CONCRETE.

3.3.3 Access Panels

Install access panels for concealed valves, vents, controls, dampers, and items requiring inspection or maintenance of sufficient size, and locate them so that the concealed items are easily serviced and maintained or completely removed and replaced. Provide access panels as specified in Section 05 50 13 MISCELLANEOUS METAL FABRICATIONS.

3.3.4 Flexible Duct

Install pre-insulated flexible duct in accordance with the latest printed instructions of the manufacturer to ensure a vapor tight joint. Provide hangers, when required to suspend the duct, of the type recommended by the duct manufacturer and set at the intervals recommended.

3.3.5 Metal Ductwork

Install according to SMACNA 1966 unless otherwise indicated. Install duct supports for sheet metal ductwork according to SMACNA 1966, unless otherwise specified. Do not use friction beam clamps indicated in SMACNA 1966. Anchor risers on high velocity ducts in the center of the vertical run to allow ends of riser to move due to thermal expansion. Erect supports on the risers that allow free vertical movement of the duct. Attach supports only to structural framing members and concrete slabs. Do not anchor supports to metal decking unless a means is provided and approved for preventing the anchor from puncturing the metal decking. Where supports are required between structural framing members, provide suitable intermediate metal framing. Where C-clamps are used, provide retainer clips.

3.3.6 Dust Control

To prevent the accumulation of dust, debris and foreign material during construction, perform temporary dust control protection. Protect the distribution system (supply and return) with temporary seal-offs at all inlets and outlets at the end of each day's work. Keep temporary protection in place until system is ready for startup.

3.3.7 Insulation

Provide thickness and application of insulation materials for ductwork, piping, and equipment according to Section 23 07 00 THERMAL INSULATION FOR MECHANICAL SYSTEMS. Externally insulate outdoor air intake ducts and plenums up to the point where the outdoor air reaches the conditioning unit or up to the point where the outdoor air mixes with the return air stream.

3.3.8 Duct Test Holes

Provide holes with closures or threaded holes with plugs in ducts and plenums as indicated or where necessary for the use of pitot tube in balancing the air system. Plug insulated duct at the duct surface, patched over with insulation and then marked to indicate location of test hole if needed for future use.

3.3.9 Power Transmission Components Adjustment

Test V-belts and sheaves for proper alignment and tension prior to operation and after 72 hours of operation at final speed. Uniformly load belts on drive side to prevent bouncing. Make alignment of direct driven couplings to within 50 percent of manufacturer's maximum allowable range of misalignment.

3.4 EQUIPMENT PADS

Provide equipment pads to the dimensions shown or, if not shown, to conform to the shape of each piece of equipment served with a minimum 3-inch margin around the equipment and supports. Allow equipment bases and foundations, when constructed of concrete or grout, to cure a minimum of 14 calendar days before being loaded.

3.5 CUTTING AND PATCHING

Install work in such a manner and at such time that a minimum of cutting and patching of the building structure is required. Make holes in exposed locations, in or through existing floors, by drilling and smooth by sanding. Use of a jackhammer is permitted only where specifically approved. Make holes through masonry walls to accommodate sleeves with an iron pipe masonry core saw.

3.6 CLEANING

Thoroughly clean surfaces of piping and equipment that have become covered with dirt, plaster, or other material during handling and construction before such surfaces are prepared for final finish painting or are enclosed within the building structure. Before final acceptance, clean mechanical equipment, including piping, ducting, and fixtures, and free from dirt, grease, and finger marks. When the work area is in an occupied space such as office, laboratory or warehouse, protect all furniture and equipment from dirt and debris. Incorporate housekeeping for field construction work which leaves all furniture and equipment in the affected area free of construction generated dust and debris; and, all floor surfaces vacuum-swept clean.

3.7 PENETRATIONS

Provide sleeves and prepared openings for duct mains, branches, and other penetrating items, and install during the construction of the surface to be penetrated. Cut sleeves flush with each surface. Place sleeves for round duct 15 inches and smaller. Build framed, prepared openings for round duct larger than 15 inches and square, rectangular or oval ducts. Sleeves and framed openings are also required where grilles, registers, and diffusers are installed at the openings. Provide one inch clearance between penetrating and penetrated surfaces except at grilles, registers, and diffusers. Pack spaces between sleeve or opening and duct or duct insulation with mineral fiber conforming with ASTM C553, Type 1, Class B-2.

3.7.1 Sleeves

Fabricate sleeves, except as otherwise specified or indicated, from 20 gauge thick mill galvanized sheet metal. Where sleeves are installed in bearing walls or partitions, provide black steel pipe conforming with ASTM A53/A53M, Schedule 20.

3.7.2 Framed Prepared Openings

Fabricate framed prepared openings from 20 gauge galvanized steel, unless otherwise indicated.

3.7.3 Insulation

Provide duct insulation in accordance with Section 23 07 00 THERMAL INSULATION FOR MECHANICAL SYSTEMS continuous through sleeves and prepared openings except firewall penetrations. Terminate duct insulation at fire dampers and flexible connections. For duct handling air at or below 60 degrees F, provide insulation continuous over the damper collar and retaining angle of fire dampers, which are exposed to unconditioned air.

3.7.4 Closure Collars

Provide closure collars of a minimum 4 inches wide, unless otherwise indicated, for exposed ducts and items on each side of penetrated surface, except where equipment is installed. Install collar tight against the surface and fit snugly around the duct or insulation. Grind sharp edges smooth to prevent damage to penetrating surface. Fabricate collars for round ducts 15 inches in diameter or less from 20 gauge galvanized steel. Fabricate collars for square and rectangular ducts, or round ducts with minimum dimension over 15 inches from 18 gauge galvanized steel. Fabricate collars for square and rectangular ducts with a maximum side of 15 inches or less from 20 gauge galvanized steel. Install collars with fasteners a maximum of 6 inches on center. Attach to collars a minimum of 4 fasteners where the opening is 12 inches in diameter or less, and a minimum of 8 fasteners where the opening is 20 inches in diameter or less.

3.8 FIELD PAINTING OF MECHANICAL EQUIPMENT

Clean, pretreat, prime and paint metal surfaces; except aluminum surfaces need not be painted. Apply coatings to clean dry surfaces. Clean the surfaces to remove dust, dirt, rust, oil and grease by wire brushing and solvent degreasing prior to application of paint, except clean to bare metal on metal surfaces subject to temperatures in excess of 120 degrees F. Where more than one coat of paint is specified, apply the second coat after the preceding coat is thoroughly dry. Lightly sand damaged painting and retouch before applying the succeeding coat. Provide aluminum or light gray finish coat.

3.8.1 Temperatures less than 120 degrees F

Immediately after cleaning, apply one coat of pretreatment primer applied to a minimum dry film thickness of 0.3 mil, one coat of primer applied to a minimum dry film thickness of one mil; and two coats of enamel applied to a minimum dry film thickness of one mil per coat to metal surfaces subject to temperatures less than 120 degrees F.

3.8.2 Temperatures between 120 and 400 degrees F

Apply two coats of 400 degrees F heat-resisting enamel applied to a total minimum thickness of two mils to metal surfaces subject to temperatures between 120 and 400 degrees F.

3.8.3 Temperatures greater than 400 degrees F

Apply two coats of 315 degrees C 600 degrees F heat-resisting paint applied to a total minimum dry film thickness of two mils to metal surfaces subject to temperatures greater than 400 degrees F.

3.9 IDENTIFICATION SYSTEMS

Provide identification tags made of brass, engraved laminated plastic, or engraved anodized aluminum, indicating service and item number on all valves and dampers. Provide tags that are 1-3/8 inch minimum diameter with stamped or engraved markings. Make indentations black for reading clarity. Attach tags to valves with No. 12 AWG 0.0808-inch diameter corrosion-resistant steel wire, copper wire, chrome-plated beaded chain or plastic straps designed for that purpose.

3.10 DUCTWORK LEAK TESTS

The requirements for ductwork leak tests are specified in Section 23 05 93.00 22 TESTING, ADJUSTING AND BALANCING FOR MECHANICAL SYSTEMS.

3.11 TESTING, ADJUSTING, AND BALANCING

The requirements for testing, adjusting, and balancing are specified in Section 23 05 93.00 22 TESTING, ADJUSTING AND BALANCING FOR MECHANICAL SYSTEMS. Begin testing, adjusting, and balancing only when the air supply and distribution, including controls, has been completed, with the exception of performance tests.

3.12 PERFORMANCE TESTS

After testing, adjusting, and balancing is complete as specified, test each system as a whole to see that all items perform as integral parts of the system and temperatures and conditions are evenly controlled throughout the building. Record the testing during the applicable season. Make corrections and adjustments as necessary to produce the conditions indicated or specified. Conduct capacity tests and general operating tests by an experienced engineer. Provide tests that cover a period of not less than 7 days for each system and demonstrate that the entire system is functioning according to the specifications. Make coincidental chart recordings at points indicated on the drawings for the duration of the time period and record the temperature at space thermostats or space sensors, the humidity at space humidistats or space sensors and the ambient temperature and humidity in a shaded and weather protected area.

Submit test reports for the performance tests in booklet form, upon completion of testing. Document phases of tests performed including initial test summary, repairs/adjustments made, and final test results in the reports.

3.13 CLEANING AND ADJUSTING

Provide a temporary bypass for water coils to prevent flushing water from

passing through coils. Thoroughly clean ducts and plenums of debris and blow free of small particles of rubbish and dust and then vacuum clean before installing outlet faces. Wipe equipment clean, with no traces of oil, dust, dirt, or paint spots. Provide temporary filters prior to startup of all fans that are operated during construction, and install new filters after all construction dirt has been removed from the building, and the ducts, plenums, casings, and other items specified have been vacuum cleaned. Maintain system in this clean condition until final acceptance. Properly lubricate bearings with oil or grease as recommended by the manufacturer. Tighten belts to proper tension. Adjust control valves and other miscellaneous equipment requiring adjustment to setting indicated or directed. Adjust fans to the speed indicated by the manufacturer to meet specified conditions. Maintain all equipment installed under the contract until close out documentation is received, the project is completed and the building has been documented as beneficially occupied.

3.14 OPERATION AND MAINTENANCE

3.14.1 Operation and Maintenance Manuals

Submit six manuals at least 2 weeks prior to field training. Submit data complying with the requirements specified in Section 01 78 23 OPERATION AND MAINTENANCE DATA and 01 78 24.00 20 FACILITY ELECTRONIC OPERATION AND MAINTENANCE SUPPORT INFORMATION (eOMSI). Submit Data Package 3 for the items/units listed under SD-10 Operation and Maintenance Data

3.14.2 Operation And Maintenance Training

Conduct a training course for the members of the operating staff as designated by the Contracting Officer. Make the training period consist of a total of 8 hours of normal working time and start it after all work specified herein is functionally completed and the Performance Tests have been approved. Conduct field instruction that covers all of the items contained in the Operation and Maintenance Manuals as well as demonstrations of routine maintenance operations. Submit the proposed On-site Training schedule concurrently with the Operation and Maintenance Manuals and at least 14 days prior to conducting the training course.

-- End of Section --

THIS PAGE HAS BEEN INTENTIONALLY LEFT BLANK

SECTION 23 03 00.00 20

BASIC MECHANICAL MATERIALS AND METHODS
08/10

PART 1 GENERAL

1.1 REFERENCES

The publications listed below form a part of this specification to the extent referenced. The publications are referred to within the text by the basic designation only.

ASTM INTERNATIONAL (ASTM)

ASTM B117	(2016) Standard Practice for Operating Salt Spray (Fog) Apparatus

1.2 SUBMITTALS

Government approval is required for submittals with a "G" designation; submittals not having a "G" designation are for Contractor Quality Control approval. Submittals with an "S" are for inclusion in the Sustainability Notebook, in conformance to Section 01 33 29 SUSTAINABILITY REPORTING. Submit the following in accordance with Section 01 33 00 SUBMITTAL PROCEDURES:

SD-11 Closeout Submittals

Energy Efficient Equipment for Motors; S

Reduce Volatile Organic Compounds (VOC) for paint/coatings; S

1.3 RELATED REQUIREMENTS

This section applies to all sections of Divisions: 21, FIRE SUPPRESSION; 22, PLUMBING; and 23, HEATING, VENTILATING, AND AIR CONDITIONING of this project specification, unless specified otherwise in the individual section.

1.4 QUALITY ASSURANCE

1.4.1 Material and Equipment Qualifications

Provide materials and equipment that are standard products of manufacturers regularly engaged in the manufacture of such products, which are of a similar material, design and workmanship. Standard products must have been in satisfactory commercial or industrial use for 2 years prior to bid opening. The 2-year use must include applications of equipment and materials under similar circumstances and of similar size. The product must have been for sale on the commercial market through advertisements, manufacturers' catalogs, or brochures during the 2 year period.

1.4.2 Alternative Qualifications

Products having less than a two-year field service record will be acceptable if a certified record of satisfactory field operation for not less than 6000 hours, exclusive of the manufacturer's factory or

laboratory tests, can be shown.

1.4.3 Service Support

The equipment items must be supported by service organizations. Submit a certified list of qualified permanent service organizations for support of the equipment which includes their addresses and qualifications. These service organizations must be reasonably convenient to the equipment installation and able to render satisfactory service to the equipment on a regular and emergency basis during the warranty period of the contract.

1.4.4 Manufacturer's Nameplate

For each item of equipment, provide a nameplate bearing the manufacturer's name, address, model number, and serial number securely affixed in a conspicuous place; the nameplate of the distributing agent will not be acceptable.

1.4.5 Modification of References

In each of the publications referred to herein, consider the advisory provisions to be mandatory, as though the word, "must" had been substituted for "should" wherever it appears. Interpret references in these publications to the "authority having jurisdiction", or words of similar meaning, to mean the Contracting Officer.

1.4.5.1 Definitions

For the International Code Council (ICC) Codes referenced in the contract documents, advisory provisions must be considered mandatory, the word "should" is interpreted as "must." Reference to the "code official" must be interpreted to mean the "Contracting Officer." For Navy owned property, references to the "owner" must be interpreted to mean the "Contracting Officer." For leased facilities, references to the "owner" must be interpreted to mean the "lessor." References to the "permit holder" must be interpreted to mean the "Contractor."

1.4.5.2 Administrative Interpretations

For ICC Codes referenced in the contract documents, the provisions of Chapter 1, "Administrator," do not apply. These administrative requirements are covered by the applicable Federal Acquisition Regulations (FAR) included in this contract and by the authority granted to the Officer in Charge of Construction to administer the construction of this project. References in the ICC Codes to sections of Chapter 1, must be applied appropriately by the Contracting Officer as authorized by his administrative cognizance and the FAR.

1.5 DELIVERY, STORAGE, AND HANDLING

Handle, store, and protect equipment and materials to prevent damage before and during installation in accordance with the manufacturer's recommendations, and as approved by the Contracting Officer. Replace damaged or defective items.

1.6 ELECTRICAL REQUIREMENTS

Furnish motors, controllers, disconnects and contactors with their respective pieces of equipment. Motors, controllers, disconnects and

contactors must conform to and have electrical connections provided under Section 26 20 00 INTERIOR DISTRIBUTION SYSTEM. Furnish internal wiring for components of packaged equipment as an integral part of the equipment. Extended voltage range motors will not be permitted. Controllers and contactors shall have a maximum of 120 volt control circuits, and must have auxiliary contacts for use with the controls furnished. When motors and equipment furnished are larger than sizes indicated, the cost of additional electrical service and related work must be included under the section that specified that motor or equipment. Power wiring and conduit for field installed equipment must be provided under and conform to the requirements of Section 26 20 00 INTERIOR DISTRIBUTION SYSTEM.

1.7 INSTRUCTION TO GOVERNMENT PERSONNEL

When specified in other sections, furnish the services of competent instructors to give full instruction to the designated Government personnel in the adjustment, operation, and maintenance, including pertinent safety requirements, of the specified equipment or system. Instructors must be thoroughly familiar with all parts of the installation and must be trained in operating theory as well as practical operation and maintenance work.

Instruction must be given during the first regular work week after the equipment or system has been accepted and turned over to the Government for regular operation. The number of man-days (8 hours per day) of instruction furnished must be as specified in the individual section. When more than 4 man-days of instruction are specified, use approximately half of the time for classroom instruction. Use other time for instruction with the equipment or system.

When significant changes or modifications in the equipment or system are made under the terms of the contract, provide additional instruction to acquaint the operating personnel with the changes or modifications.

1.8 ACCESSIBILITY

Install all work so that parts requiring periodic inspection, operation, maintenance, and repair are readily accessible. Install concealed valves, expansion joints, controls, dampers, and equipment requiring access, in locations freely accessible through access doors.

PART 2 PRODUCTS

2.1 PRODUCT SUSTAINABILITY CRITERIA

For products in this section, where applicable and to extent allowed by performance criteria, provide and document the following:

2.1.1 Energy Efficient Equipment for Motors

Provide documentation in conformance with Section 01 33 29 SUSTAINABILITY REPORTING paragraph ENERGY EFFICIENT EQUIPMENT that the motors meet energy efficiency requirements as outlined in this section.

2.1.2 Reduce Volatile Organic Compounds (VOC) for paint/coatings

Low or no VOC's and no added urea formaldehyde for paints or coatings, in conformance with Section 01 33 29 SUSTAINABILITY REPORTING paragraph REDUCE VOLATILE ORGANIC COMPOUNDS (VOC).

PART 3 EXECUTION

3.1 PAINTING OF NEW EQUIPMENT

New equipment painting must be factory applied or shop applied, and must be as specified herein, and provided under each individual section.

3.1.1 Factory Painting Systems

Manufacturer's standard factory painting systems may be provided subject to certification that the factory painting system applied will withstand 125 hours in a salt-spray fog test, except that equipment located outdoors must withstand 3000 hours in a salt-spray fog test. Salt-spray fog test must be in accordance with ASTM B117, and for that test the acceptance criteria must be as follows: immediately after completion of the test, the paint must show no signs of blistering, wrinkling, or cracking, and no loss of adhesion; and the specimen must show no signs of rust creepage beyond 0.125 inch on either side of the scratch mark.

The film thickness of the factory painting system applied on the equipment must not be less than the film thickness used on the test specimen. If manufacturer's standard factory painting system is being proposed for use on surfaces subject to temperatures above 120 degrees F, the factory painting system must be designed for the temperature service.

3.1.2 Shop Painting Systems for Metal Surfaces

Clean, pretreat, prime and paint metal surfaces; except aluminum surfaces need not be painted. Apply coatings to clean dry surfaces. Clean the surfaces to remove dust, dirt, rust, oil and grease by wire brushing and solvent degreasing prior to application of paint, except metal surfaces subject to temperatures in excess of 120 degrees F must be cleaned to bare metal.

Where more than one coat of paint is specified, apply the second coat after the preceding coat is thoroughly dry. Lightly sand damaged painting and retouch before applying the succeeding coat. Color of finish coat must be aluminum or light gray.

a. Temperatures Less Than 120 Degrees F: Immediately after cleaning, the metal surfaces subject to temperatures less than 120 degrees F must receive one coat of pretreatment primer applied to a minimum dry film thickness of 0.3 mil, one coat of primer applied to a minimum dry film thickness of 1 mil; and two coats of enamel applied to a minimum dry film thickness of 1 mil per coat.

b. Temperatures Between 120 and 400 Degrees F: Metal surfaces subject to temperatures between 120 and 400 degrees F must receive two coats of 400 degrees F heat-resisting enamel applied to a total minimum thickness of 2 mils.

c. Temperatures Greater Than 400 Degrees F: Metal surfaces subject to temperatures greater than 400 degrees F must receive two coats of 600 degrees F heat-resisting paint applied to a total minimum dry film thickness of 2 mils.

-- End of Section --

SECTION 23 05 93.00 22

TESTING, ADJUSTING, AND BALANCING FOR MECHANICAL SYSTEMS
09/19

PART 1 GENERAL

1.1 REFERENCES

The publications listed below form a part of this specification to the extent referenced. The publications are referred to within the text by the basic designation only.

ACOUSTICAL SOCIETY OF AMERICA (ASA)

ASA S1.11 PART 1	(2014) American National Standard Electroacoustics – Octave-Band and Fractional-Octave-Band Filters – Part 1: Specifications
ASA S1.4	(1983; Amendment 1985; R 2006) Specification for Sound Level Meters (ASA 47)

AIR MOVEMENT AND CONTROL ASSOCIATION INTERNATIONAL, INC. (AMCA)

AMCA 203	(1990; R 2011) Field Performance Measurements of Fan Systems

AMERICAN SOCIETY OF HEATING, REFRIGERATING AND AIR-CONDITIONING ENGINEERS (ASHRAE)

ASHRAE 62.1	(2010) Ventilation for Acceptable Indoor Air Quality
ASHRAE HVAC APP IP HDBK	(2015) HVAC Applications Handbook, I-P Edition

ASSOCIATED AIR BALANCE COUNCIL (AABC)

AABC MN-1	(2016; 7th ed) National Standards for Total System Balance

NATIONAL ENVIRONMENTAL BALANCING BUREAU (NEBB)

NEBB MASV	(2006) Procedural Standards for Measurements and Assessment of Sound and Vibration
NEBB PROCEDURAL STANDARDS	(2015) Procedural Standards for TAB (Testing, Adjusting and Balancing) Environmental Systems

SHEET METAL AND AIR CONDITIONING CONTRACTORS' NATIONAL ASSOCIATION (SMACNA)

SMACNA 1780	(2002) HVAC Systems - Testing, Adjusting and Balancing, 3rd Edition

SMACNA 1858	(2004) HVAC Sound And Vibration Manual - First Edition
SMACNA 1972 CD	(2012) HVAC Air Duct Leakage Test Manual - 2nd Edition

1.2 DEFINITIONS

a. AABC: Associated Air Balance Council

b. COTR: Contracting Officer's Technical Representative

c. DALT: Duct air leakage test

d. DALT'd: Duct air leakage tested

e. Duct System: When applied to DALT, this phrase means "complete duct system", inclusive of all ductwork, plenums, mains, branches, fittings and duct-mounted components and appurtenances, e.g. manual balancing dampers, control dampers, access doors, fire dampers, duct-mounted coils, etc. up to, but excluding air-handling equipment (e.g. AHUs, DOAUs, ERUs, VAVs) and flexible duct.

f. HVAC: Heating, ventilating, and air conditioning; or heating, ventilating, and cooling

g. NEBB: National Environmental Balancing Bureau

h. Out-of-tolerance data: Pertains only to field acceptance testing of Final DALT or TAB report. When applied to DALT work, this phrase means "a leakage rate measured during DALT field acceptance testing which exceeds the leakage rate allowed by Appendix D REQUIREMENTS FOR DUCT AIR LEAK TESTING." When applied to TAB work this phrase means "a measurement taken during TAB field acceptance testing which does not comply with the requirements indicated in the paragraph WORKMANSHIP."

i. Season of maximum heating load: The time of year when the outdoor temperature at the project site remains within plus or minus 20 degrees Fahrenheit of the project site's winter outdoor design temperature, throughout the period of TAB data recording.

j. Season of maximum cooling load: The time of year when the outdoor temperature at the project site remains within plus or minus 5 degrees Fahrenheit of the project site's summer outdoor design temperature, throughout the period of TAB data recording.

k. Season 1, Season 2: Depending upon when the project HVAC is completed and ready for TAB, Season 1 is defined, thereby defining Season 2. Season 1 could be the season of maximum heating load, or the season of maximum cooling load.

l. Sound measurements terminology: Defined in AABC MN-1, NEBB MASV, or SMACNA 1858 (TABB).

m. TAB: Testing, adjusting, and balancing

n. TAB'd: Testing/Adjusting/Balancing procedures performed

o. TAB Agency: TAB Firm
p. TABB: Testing Adjusting and Balancing Bureau

1.2.1 Similar Terms

In some instances, terminology differs between the Contract and the TAB Standard primarily because the intent of this Section is to use the industry standards specified, along with additional requirements listed herein to produce optimal results.

The following table of similar terms is provided for clarification only. Contract requirements take precedent over the corresponding AABC, NEBB, or TABB requirements where differences exist.

SIMILAR TERMS			
Contract Term	AABC Term	NEBB Term	TABB Term
TAB Standard	National Standards for Testing and Balancing Heating, Ventilating, and Air Conditioning Systems	Procedural Standards for Testing, Adjusting and Balancing of Environmental Systems	HVAC Systems Testing, Adjusting, and Balancing
TAB supervisor or Team Supervisor	TAB Engineer	TAB Supervisor	TAB Supervisor
Systems Readiness Check	Construction Phase Inspection	Field Readiness Check & Preliminary Field Procedures	Field Readiness Check & Prelim. Field Procedures

1.3 WORK DESCRIPTION

The work includes duct air leakage testing (DALT) and testing, adjusting, and balancing (TAB) of new heating, ventilating, and cooling (HVAC) air distribution systems including equipment and performance data, ducts, and piping which are located within, on, under, between, and adjacent to buildings.

Perform TAB in accordance with the requirements of the TAB procedural standard recommended by the TAB trade association that approved the TAB Firm's qualifications. Comply with requirements of AABC MN-1, NEBB PROCEDURAL STANDARDS, or SMACNA 1780 (TABB) as supplemented and modified by this specification section. All recommendations and suggested practices contained in the TAB procedural standards are considered mandatory.

Conduct DALT and TAB of the indicated existing systems and equipment and submit the specified DALT and TAB reports for approval. Conduct DALT testing in compliance with the requirements specified in SMACNA 1972 CD, except as supplemented and modified by this section. Conduct DALT and TAB work in accordance with the requirements of this section.

1.3.1 Air Distribution Systems

Test, adjust, and balance (TAB) system in compliance with this section. Obtain Contracting Officer's written approval before applying insulation to exterior of air distribution systems as specified under Section 23 07 00 THERMAL INSULATION FOR MECHANICAL SYSTEMS.

1.3.2 Related Requirements

Requirements for price breakdown of HVAC TAB work are specified in Section 01 20 00.00 20 PRICE AND PAYMENT PROCEDURES.

Requirements for construction scheduling related to HVAC TAB work are specified in Section 01 32 17.00 20 COST LOADED NETWORK ANALYSIS SCHEDULES (NAS).

1.4 SUBMITTALS

Government approval is required for submittals with a "G" designation; submittals not having a "G" designation are for Contractor Quality Control approval. Submittals with an "S" are for inclusion in the Sustainability eNotebook, in conformance to Section 01 33 29 SUSTAINABILITY REPORTING. Submit the following in accordance with Section 01 33 00 SUBMITTAL PROCEDURES:

SD-01 Preconstruction Submittals

Reports of Existing Conditions; G

Independent TAB Agency and Personnel Qualifications; G

Pre-Field Engineering Report; G

SD-06 Test Reports

Completed Pre-Final DALT Report; G

Certified Final DALT Report; G

Certified Final TAB Report for Proportional Balancing; G

Certified Final TAB Report for Season 1; G

Certified Final TAB Report for Season 2; G

SD-07 Certificates

Independent TAB Agency and Personnel Qualifications; G

Advance Notice of Pre-Final DALT Field Work; G

Advance Notice of TAB Field Work for Proportional Balancing; G

Advance Notice of TAB Field Work for Season 1; G

Advance Notice of TAB Field Work for Season 2; G

1.5 QUALITY ASSURANCE

1.5.1 Independent TAB Agency and Personnel Qualifications

To secure approval for the proposed agency, submit information certifying that the TAB agency is a first tier subcontractor who is not affiliated with any other company participating in work on this contract, including design, furnishing equipment, commissioning, or construction. Further, submit the following, for the agency, to Contracting Officer for approval:

a. Independent AABC or NEBB or TABB TAB agency:

TAB agency: AABC registration number and expiration date of current certification; or NEBB certification number and expiration date of current certification; or TABB certification number and expiration date of current certification.

b. TAB Agency Team Members

TAB agency employees approved to accomplish work on this contract must be permanent employees of the TAB agency. No other personnel are allowed to perform TAB work on this contract.

TAB team supervisor: Name and copy of AABC or NEBB or TABB TAB supervisor certificate and expiration date of current certification.

TAB team field leader: Name and copy of AABC or NEBB or TABB TAB certificate, and documented evidence, including a list of projects, roles performed, and associated dates, that the team field leader has satisfactorily performed full-time supervision of TAB work in the field for not less than 3 years immediately preceding this contract's bid opening date.

TAB team field technicians: Names and documented evidence, including a list of projects, roles performed, and associated dates, that each field technician has satisfactorily assisted a TAB team field leader in performance of TAB work in the field for not less than one year immediately preceding this contract's bid opening date.

Current certificates: Registrations and certifications are current, and valid for the duration of this contract. Renew Certifications which expire prior to completion of the TAB work, in a timely manner so that there is no lapse in registration or certification. TAB agency or TAB team personnel without a current registration or current certification are not to perform TAB work on this contract.

c. Replacement of TAB team members: Replacement of members may occur if each new member complies with the applicable personnel qualifications and each is approved by the Contracting Officer.

1.5.2 TAB Standard

Perform TAB in accordance with the requirements of the standard under which the TAB Firm's qualifications are approved, i.e., AABC MN-1, NEBB PROCEDURAL STANDARDS, or SMACNA 1780 unless otherwise specified herein. All recommendations and suggested practices contained in the TAB Standard are considered mandatory. Use the provisions of the TAB

Standard, including checklists, report forms, etc., as nearly as practical, to satisfy the Contract requirements. Use the TAB Standard for all aspects of TAB, including qualifications for the TAB Firm and Specialist and calibration of TAB instruments. Where the instrument manufacturer calibration recommendations are more stringent than those listed in the TAB Standard, adhere to the manufacturer's recommendations.

All quality assurance provisions of the TAB Standard such as performance guarantees are part of this contract. For systems or system components not covered in the TAB Standard, TAB procedures must be developed by the TAB Specialist. Where new procedures, requirements, etc., applicable to the Contract requirements have been published or adopted by the body responsible for the TAB Standard used (AABC, NEBB, or TABB), the requirements and recommendations contained in these procedures and requirements are considered mandatory, including the latest requirements of ASHRAE 62.1.

1.5.3 Sequencing and Scheduling

1.5.3.1 DALT and TAB Submittal and Work Schedule

Comply with requirements specified in Appendix C: DALT AND TAB SUBMITTAL AND WORK SCHEDULE included at the end of this section.

1.5.4 Subcontractor Special Requirements

Perform all work in this section in accordance with the paragraph SUBCONTRACTOR SPECIAL REQUIREMENTS in Section 01 30 00 ADMINISTRATIVE REQUIREMENTS, stating that all contract requirements of this section must be accomplished directly by a first tier subcontractor. No work may be performed by a second tier subcontractor.

1.5.5 Instrument Calibration Certificates

It is the responsibility of the TAB firm to provide instrumentation that meets the minimum requirements of the standard under which the TAB Firm's qualifications are approved for use on a project. Instrumentation must be in proper operating condition and must be applied in accordance with the instrumentation's manufacturer recommendations.

All instrumentation must bear a valid NIST traceable calibration certificate during field work and during government acceptance testing. All instrumentation must be calibrated within no later than one year of the date of TAB work or government acceptance testing field work.

PART 2 PRODUCTS

Not Used

PART 3 EXECUTION

3.1 WORK DESCRIPTIONS OF PARTICIPANTS

Comply with requirements of this section as specified in Appendix A WORK DESCRIPTIONS OF PARTICIPANTS.

3.1.1 PRE-FIELD ENGINEERING REPORT

Comply with the requirements specified in Appendix B REPORTS - DALT and

TAB included at the end of this section.

3.2 PRE-DALT/TAB MEETING

Meet with the Contracting Officer's technical representative (COTR) to develop a mutual understanding relative to the details of the DALT work and TAB work requirements. Ensure that the TAB supervisor is present at this meeting. Requirements to be discussed include required submittals, work schedule, and field quality control.

3.3 DALT PROCEDURES

3.3.1 Prerequisite for DALT Field Work

Complete the following prior to starting DALT field work:

a. Receive approval of the SD-01 Preconstruction Submittals.

b. Installation and sealing in conformance with Section 23 00 00 AIR SUPPLY, DISTRIBUTION, VENTILATION, AND EXHAUST SYSTEMS, except as supplemented and modified by this section, of those duct systems to be DALT'd.

c. All work items and inspections indicated by the TAB Team Supervisor that need to be accomplished before DALT field work can be performed.

d. Furnish the TAB Team Supervisor a copy of the ductwork sheet metal shop or design drawings indicating the completed duct systems available for DALT.

3.3.2 Instruments, Consumables and Personnel

Provide instruments, consumables and personnel required to accomplish the DALT field work. Follow the same basic procedure specified below for TAB Field Work, including maintenance and calibration of instruments, selection of appropriate instruments to meet the accuracy requirements of measurements, accuracy of measurements, preliminary procedures, field work, workmanship and treatment of deficiencies. Calibrate and maintain instruments in accordance with manufacturer's written procedures.

3.3.3 Advance Notice of Pre-Final DALT Field Work

On completion of the installation of each duct system indicated to be DALT'd, notify the Contracting Officer in writing prior to the COTR's duct selection field visit.

3.3.4 Ductwork To Be DALT'd

All duct systems are subject to DALT including supply, return, outside air, exhaust, and relief with exception of transfer air. From each duct system indicated as subject to DALT, the COTR will randomly select sections of each completed duct system for testing by the Contractor's TAB Firm. The sections selected will not exceed 20 percent of the total measured linear footage of duct systems indicated as subject to DALT. Sections of duct systems subject to DALT will include 20 percent of main ducts, sub-main ducts, branch main ducts, branch ducts and plenums.

It is acceptable for an entire duct system to be DALT'd instead of disassembling that system in order to DALT only the 20 percent portion

specified above.

It is acceptable to DALT the entire duct systems for 20 percent of the total quantity of similar units (i.e. WSHPs less than 5 tons cooling capacity, VAVs, and FCUs) instead of testing 20 percent of the linear footage of duct systems for each of these units.

Sealing of all selected duct systems is prohibited, with exception of temporary end caps and connection for test apparatus, from time Contractor is notified of selections until DALT measurements are recorded.

3.3.5 DALT Testing

Perform DALT on the duct sections of each duct system as selected by the COTR. Use the duct class, seal class, leakage class and the leak test pressure data indicated in Appendix D, to comply with the procedures specified herein and in SMACNA 1972 CD.

In spite of specifications of SMACNA 1972 CD to the contrary, DALT ductwork of construction class of 3-inch water gauge static pressure and below if indicated to be DALT'd. Complete DALT work on the COTR selected ductwork within 48 hours after the particular ductwork was selected for DALT. Separately conduct DALT work for large duct systems to enable the DALT work to be completed in 48 hours.

3.3.6 Completed Pre-Final DALT Report

After completion of the DALT work, prepare a Pre-final DALT Report meeting the additional requirements specified in Appendix B REPORTS - DALT and TAB. Data required by those data report forms shall be furnished by the TAB team. Prepare the report neatly and legibly; the Pre-final DALT report shall provide the basis for the Final DALT Report.

TAB supervisor shall review, approve and sign the Pre-Final DALT Report and submit this report within two days of completion of DALT field work. Verbally notify the COTR that the field check of the Pre-Final DALT Report data can commence.

Further, if any data on the Pre-final DALT report form for a given duct section is out-of-tolerance, report the failure, notify the COTR, and resolve all deficiencies. Repairs shall be applied to similar conditions in all untested duct systems. For each failed duct section, DALT shall be conducted on one additional duct section as selected by the COTR.

3.3.7 Quality Assurance - COTR DALT Field Acceptance Testing

In the presence of the COTR and TAB team field leader, verify for accuracy Pre-final DALT Report data selected by the COTR. For each duct system, this acceptance testing shall be conducted on a maximum of 50 percent of the duct sections DALT'd.

Further, if any Acceptance Testing Measurement for a given duct section is out-of-tolerance, report the failure, and resolve all deficiencies. Repairs shall be applied to similar conditions in all untested duct systems. For each failed duct section, DALT shall be conducted on one additional duct section as selected by the COTR.

3.3.8 Additional COTR Field Acceptance Testing

If any of the duct sections checked for a given system are determined to have a leakage rate measured that exceeds the leakage rate allowed by SMACNA Leak Test Manual for an indicated duct construction class and sealant class, terminate data checking for that section. The associated Pre-final DALT Report data for the given duct system will be disapproved. Make the necessary corrections and prepare a revised Pre-final DALT Report. Reschedule a field check of the revised report data with the COTR.

3.3.9 Certified Final DALT Report

On successful completion of all field checks of the Pre-Final DALT Report data for all systems, the TAB Supervisor shall assemble, review, approve, sign and submit the Final DALT Report in compliance with Appendix B REPORTS - DALT and TAB to the Contracting Officer for approval.

3.4 TAB PROCEDURES

3.4.1 Prerequisite for TAB Field Work

Complete the following prior to starting TAB field work:

a. All DALT field work and obtain approval of the Certified Final DALT Report.

b. All work items and inspections indicated by the TAB Team Supervisor that need to be accomplished before TAB field work can be performed.

c. Enclosure of the building envelope according to the contract documents with final construction completed, the Air Barrier Pressure Test completed, and the Air Leakage Test Reports and Diagnostic Test Reports submitted and approved in accordance with Specification Section 07 05 23 PRESSURE TESTING AN AIR BARRIER SYSTEM FOR AIR TIGHTNESS.

d. Approval of the manufacturer's equipment start-up forms for each piece of equipment to be TAB'd.

e. Prerequisite TAB requirements of Section 01 91 00.15 22 TOTAL BUILDING COMMISSIONING.

3.4.2 TAB Field Work

Provide instruments and consumables required to accomplish the TAB work. Calibrate and maintain instruments in accordance with manufacturer's written procedures.

Test, adjust, and balance systems until measured flow rates (air and water flow) are in compliance with the paragraph WORKMANSHIP. Conduct TAB work, including measurement accuracy, and sound measurement work in conformance with the AABC MN-1 and or NEBB PROCEDURAL STANDARDS and NEBB MASV or SMACNA 1780 (used by TABB), and SMACNA 1858 sound measurement procedures, except as supplemented and modified by this section. The only measurement data which can be deferred until Season 1 and Season 2 is that data which would be affected in terms of accuracy due to outside ambient conditions and is reported in TAB Report for Season 1 and for Season 2. TAB Report for Proportional Balancing may include data for Season 1 when measured within seasonal limitations.

3.4.3 Preliminary Procedures

Use the approved pre-field engineering report, in addition to all applicable requirements within this section, as instructions and procedures for accomplishing TAB field work. TAB engineer is to locate, in the field, test ports required for testing. It is the responsibility of the Contractor to provide and install test ports as required by the TAB engineer.

3.4.4 TAB Air Distribution Systems

3.4.4.1 Air Handling Units

Air handling unit systems including fans (air handling unit fans, exhaust fans and winter ventilation fans), coils, ducts, plenums, mixing boxes, terminal units, variable air volume boxes, and air distribution devices for supply air, return air, outside air, mixed air relief air, and makeup air.

3.4.4.2 Dedicated Outside Air System and Energy Recovery Units

Dedicated Outside Air System and Energy Recovery unit systems including fans, coils, ducts, plenums, registers, diffusers, grilles, and louvers for supply air, return air, outside air, and exhaust air.

3.4.5 TAB Equipment with Thermal Energy Transfer Components

Perform capacity tests to verify that the thermal energy transfer components, devices, and equipment meet the indicated design capacity. Describe the procedure performed for each test. Water temperatures shall be measured through immersion into fluid stream. Report all design data, actual field measurements, and calculations for all components, devices and equipment below.

3.4.5.1 Units with Coils

Report heating and cooling performance capacity tests for hot water, chilled water, direct-expansion, and steam coils:

a. For units with capacities greater than 26,370 Watts 7.5 tons (90,000 BTU/H) cooling, such as factory manufactured units, central built-up units and rooftop units, determine the apparent air-side coil capacity by calculations utilizing direct measurement of airflow via Pitot tube duct traverse, single point measurements of entering and leaving wet and dry bulb temperatures for cooling capacity and dry bulb temperature only for heating capacity. Calculate water-side coil capacity utilizing direct measurements of water flow rate, and entering and leaving water temperatures. Measure and record coil water pressure drop.

b. For units with capacities of 26370 Watts 7.5 tons (90,000 BTU/H) or less, such as fan coil units, duct mounted reheat coils associated with VAV terminal units, and unitary units, such as through-the-wall heat pumps, determine the apparent air side coil capacity by calculations using single point measurement of entering and leaving wet and dry bulb temperatures for cooling capacity and dry bulb temperature only for heating capacity.

3.4.5.2 Units with Heat Recovery Devices

Report heating and cooling energy recovery performance tests for energy recovery devices (wheels, coils, fixed plate, etc.).

Report total cooling capacity, heating capacity and energy recovery effectiveness. For outside air and exhaust airstreams measure and report airflows, and entering and leaving wet and dry bulb temperatures across heat recovery device. For water-side calculations, utilize direct measurements of water flow rate and entering and leaving water temperatures. Measure and record water pressure drops.

3.4.5.3 Thermal Energy Transfer Equipment

Report heating and/or cooling performance capacity tests for thermal energy transfer equipment (boilers, chillers, cooling towers, etc.) as applicable.

Measure and report water flow rate, water-side pressure drops, and entering and leaving water temperature. Report capacity.

3.4.6 TAB Building Pressure

Record building differential pressure for all sides of the building on each floor where openings exist to obtain differential pressure measurements. Report all system setup parameters affecting building pressure measurement (e.g. exhaust/relief, outdoor air) and indicate wind speed during time of building pressure measurements. Measure in maximum building systems configuration.

3.4.7 Sound Measurement Work

3.4.7.1 Areas To Be Sound Measured

In the following spaces, measure and record the sound power level for each octave band listed in ASHRAE HVAC APP IP HDBK Noise Criteria:

a. All HVAC mechanical rooms, including machinery spaces and other spaces containing HVAC power drivers and power driven equipment.

b. All spaces sharing a common barrier with each mechanical room, including rooms overhead, rooms on the other side of side walls, and rooms beneath the mechanical room floor.

c. AHU-1 & DOAS-1 System: Rooms: 101

d. AHU-2 & DOAS-2 System: Rooms: 106

3.4.7.2 Procedure

Measure sound levels in each room, when unoccupied except for the TAB team, with all HVAC systems that would cause sound readings in the room operating in their noisiest mode. Record the sound level in each octave band. Attempt to mitigate the sound level and bring the level to within the specified ASHRAE HVAC APP IP HDBK noise criteria goals, if such mitigation is within the TAB team's control. State in the report the ASHRAE HVAC APP IP HDBK noise criteria goals. If sound level cannot be brought into compliance, provide written notice of the deficiency to the Contractor for resolution or correction.

3.4.7.3 Timing

Measure sound levels at times prescribed by AABC or NEBB or TABB.

3.4.7.4 Meters

Measure sound levels with a sound meter complying with ASA S1.4, Type 1 or 2, and an octave band filter set complying with ASA S1.11 PART 1. Use measurement methods for overall sound levels and for octave band sound levels as prescribed by NEBB.

3.4.7.5 Calibration

Calibrate sound levels as prescribed by AABC or NEBB or TABB, except that calibrators emitting a sound pressure level tone of 94 dB at 1000 hertz (Hz) are also acceptable.

3.4.7.6 Background Noise Correction

Determine background noise component of room sound (noise) levels for each (of eight) octave bands as prescribed by AABC or NEBB or TABB.

3.4.8 TAB Work on Performance Tests With Seasonal Limitations

3.4.8.1 Performance Tests

In addition to the TAB proportional balancing work on the air distribution systems and the water distribution systems, accomplish TAB work on the HVAC systems which directly transfer thermal energy. TAB the operational performance of the heating systems and cooling systems in accordance with the paragraph TAB EQUIPMENT WITH THERMAL ENERGY TRANSFER COMPONENTS.

3.4.8.2 Season Of Maximum Load

Visit the contract site for at least two TAB work sessions for Season 1 and Season 2 field measures. Visit the contract site during the season of maximum heating load and visit the contract site during the season of maximum cooling load, the goal being to TAB the operational performance of the heating systems and cooling systems under their respective maximum outdoor environment-caused loading. During the seasonal limitations, TAB the operational performance of the heating systems and cooling systems.

3.4.8.3 Ambient Temperatures

On each TAB report form used for recording data, record the outdoor and indoor ambient dry bulb temperature range and the outdoor and indoor ambient wet bulb temperature range within which the report form's data was recorded. Record these temperatures at beginning and at the end of data taking.

3.4.8.4 Sound Measurements

Comply with the paragraph SOUND MEASUREMENT WORK, specifically, the requirement that a room must be operating in its noisiest mode at the time of sound measurements in the room. The maximum noise level measurements could depend on seasonally related heat or cooling transfer equipment.

3.4.9 Workmanship

Conduct TAB work on the HVAC systems until measured flow rates are within

plus or minus 5 percent of the design flow rates as specified or indicated on the contract documents. Further, balance air distribution systems until measured outside air flow rates are within plus 10 percent and minus 0 percent of design flow rates and measured exhaust air flow rates are within plus 0 percent and minus 10 percent of design flow rates as specified or indicated on the contract documents, except so not violate code minimum airflow requirements. For air terminals with volumetric flow rates 50 CFM or less, conduct TAB work until measured flow rates are within the greater of: plus 10 or minus 10 percent, or plus 3 CFM or minus 3 CFM. This TAB work includes adjustment of balancing valves, balancing dampers, and sheaves. Further, this TAB work includes changing out fan sheaves and pump impellers if required to obtain air and water flow rates specified or indicated. If, with these adjustments and equipment changes, the specified or indicated design flow rates cannot be attained, contact the Contracting Officer for direction.

Conduct TAB field acceptance testing verifying measured data falls within the range of plus 5 to minus 5 percent of the TAB Report data. Further, verify measured volumetric flow rates for air terminals 50 CFM or less fall within the greater of: plus 10 or minus 10 percent, or plus 3 CFM or minus 3 CFM from design flow rates.

3.4.10 Design/Construction Deficiencies

Strive to meet the intent of this section to maximize the performance of the equipment as designed and installed. However, if deficiencies in equipment design or installation prevent TAB work from being accomplished within the range of design values specified in the paragraph WORKMANSHIP, provide written notice as soon as possible to the Contractor and the Contracting Officer describing the deficiency and recommended correction.

Within 3 working days after the TAB Agency has encountered any design or installation deficiencies, the TAB Supervisor must submit written notification directly to the Contracting Officer, with a separate copy to the Contractor, of all such deficiencies. Provide in this submittal a complete explanation, including supporting documentation, detailing deficiencies. Where deficiencies are encountered that are believed to adversely impact successful completion of:

a. TAB Field Work: the TAB Agency must issue notice and request direction in the notification submittal.

b. COTR TAB Field Acceptance Testing or Commissioning: the TAB Agency must issue notice and the Contractor must, within 5 working days of the TAB Agency notice, submit written notification directly to the Contracting Officer, with a separate copy to the TAB Agency, of all such deficiencies, the intended or implemented corrective action, the planned or actual date(s) for completion of each corrective action.

The Contractor must submit notification of construction deficiencies in accordance with the paragraph titled INFORMATION FOR THE CONTRACTING OFFICER in Section 01 45 00.00 20 QUALITY CONTROL. This notification is in lieu of other notification within this section.

Responsibility for correction of installation deficiencies is the Contractor's. If a deficiency is in equipment design, call the TAB team supervisor for technical assistance. Responsibility for reporting design deficiencies to Contractor is the TAB team supervisor's.

3.4.11 TAB Reports

Additional requirements for TAB Reports are specified in Appendix B REPORTS - DALT and TAB

3.4.12 Quality Assurance - COTR TAB Field Acceptance Testing

3.4.12.1 TAB Field Acceptance Testing

Field acceptance testing of performance capacity data from TAB work with seasonal limitations is to be performed during comparable outdoor conditions as those during the TAB work for the approved Final TAB Report for Season 1 and for Season 2, respectively, as determined by the COTR.

During the field acceptance testing, verify, in the presence of the COTR, random selections of data (water, air quantities, air motion, temperature, pressure, sound level readings) recorded in the TAB Report. Points and areas for field acceptance testing are to be selected by the COTR. Measurement and test procedures are the same as required for TAB work for the TAB Report.

Field acceptance testing includes verification of TAB Report data recorded for the following equipment groups:

Group 1: All chillers, boilers, cooling towers, pumps, return fans, computer room units, energy recovery units, and air handling units (rooftop and central stations).

Group 2: 25 percent of the terminal units (e.g.: VAV boxes, water source heat pumps, fan coil units, etc.) and associated diffusers and registers.

Group 3: 25 percent of the supply diffusers, registers, grilles associated with air handling equipment (e.g.: AHUs, water source heat pumps, fan coil units, etc.).

Group 4: 25 percent of the return grilles, return registers, exhaust grilles and exhaust registers.

Group 5: 25 percent of the supply fans and exhaust fans.

3.4.12.2 Additional COTR TAB Field Acceptance Testing

If any of the acceptance testing measurements for a given equipment group is found out of tolerance, terminate data verification for all affected data for that group. The affected data for the given group will be disapproved. Make the necessary corrections and prepare a revised TAB Report. Reschedule acceptance testing of the revised report data with the COTR.

3.4.12.3 Prerequisite for Approval

Compliance with the field acceptance testing requirements of this section is a prerequisite for the final Contracting Officer approval of the Final TAB Report submitted and of the acceptance of the facility for occupancy.

3.5 MARKING OF SETTINGS

Upon the final TAB work approval, permanently mark the settings of HVAC

adjustment devices including valves, gauges, splitters, and dampers so that adjustment can be restored if disturbed at any time. Label variable frequency drives with final frequency (Hz) and control setpoint. Provide permanent markings clearly indicating the settings on the adjustment devices which result in the data reported on the submitted TAB report.

3.6 MARKING OF TEST PORTS

The TAB team is to permanently and legibly mark and identify the location points of the duct test ports. If the ducts have exterior insulation, make these markings on the exterior side of the duct insulation. Show the location of test ports on the as-built mechanical drawings with dimensions given where the test port is covered by exterior insulation.

3.7 APPENDICES

Appendix A WORK DESCRIPTIONS OF PARTICIPANTS
Appendix B REPORTS - DALT and TAB
Appendix C DALT AND TAB SUBMITTAL AND WORK SCHEDULE
Appendix D REQUIREMENTS FOR DUCT AIR LEAK TESTING

Appendix A

WORK DESCRIPTIONS OF PARTICIPANTS

The Contractor is responsible for ensuring compliance with all requirements of this specification section. However, the following delineation of specific work items is provided to facilitate and co-ordinate execution of the various work efforts by personnel from separate organizations.

1. Contractor

a. HVAC documentation: Provide pertinent contract documentation to the TAB Firm, to include the following: the contract drawings and specifications; copies of the approved submittal data for all HVAC equipment, air distribution devices, and air/water measuring/balancing devices; the construction work schedule; and other applicable documents requested by the TAB Firm. Provide the TAB Firm copies of contract revisions and modifications as they occur.

b. Schedules: Ensure the requirements specified in Appendix C "DALT and TAB Submittal and Work Schedule" are met.

c. Pre-DALT / TAB meeting: Arrange and conduct the Pre-DALT and TAB meeting. Ensure that a representative is present for the sheet metal contractor, the mechanical contractor, the electrical contractor, and the automatic temperature controls contractor.

d. Advance Notice: Monitor the completion of the duct systems' installation and provide the Advance Notice for Pre-Final DALT field work as specified.

e. Coordinate Support: Provide and coordinate support personnel required by the TAB Firm in order to accomplish the DALT and TAB field work. Support personnel may include factory representatives, HVAC controls installers, HVAC equipment mechanics, sheet metal workers, pipe fitters, and insulators. Ensure support personnel are present at the work site at the times required.

f. Correct Deficiencies: Ensure the resolution of Construction Deficiencies are provided as specified herein. Refer to the paragraph DESIGN/CONSTRUCTION DEFICIENCIES. Correct each deficiency as soon as practical with the Contracting Officer, and submit revised schedules and other required documentation.

g. Pre-TAB Field Work: Complete check out and debugging of HVAC equipment, ducts, and controls prior to the TAB engineer arriving at the project site to begin the TAB work. Debugging includes searching for and eliminating malfunctioning elements in the HVAC system installations, and verifying all adjustable devices are functioning as designed. Include as pre-TAB field work items, the deficiencies pointed out by the TAB team supervisor in the design review report.

   Prior to the TAB field team's arrival, ensure completion of the applicable inspections and work items listed in the TAB team supervisor's DALT and TAB Work Procedures Summary.

h. Give Notice of Testing: Submit advance notice of proportional

balancing, Season 1, and Season 2 TAB field work.

i. Insulation work: Insulatiom must not be installed on ducts to be DALT'd until DALT field acceptance testing on the subject ducts is complete.

Ensure the duct and piping systems are properly insulated and vapor sealed upon the successful completion and acceptance of the DALT and TAB work.

j. Duct Concealment: Ducts to be DALT'd must not be concealed until DALT field acceptance testing on the subject ducts is complete.

2. TAB Team Supervisor

a. Overall management: Supervise and manage the overall TAB team work effort, including preliminary and technical DALT and TAB procedures and TAB team field work.

b. Schedule: Ensure the requirements specified in Appendix C "DALT and TAB Submittal and Work Schedule" are met.

c. Submittals: Provide the submittals specified herein.

d. Pre-DALT/TAB meeting: Attend meeting with Contractor. Ensure TAB personnel that will be involved in the TAB work under this contract attend the meeting.

e. Pre-Field Engineering Report: Submit typed report described in Appendix B "Reports - DALT and TAB".

f. Support required: Specify the technical support personnel required from the Contractor other than the TAB agency; such as factory representatives for temperature controls or for complex equipment. Inform the Contractor in writing of the support personnel needed and when they are needed. Furnish the notice as soon as the need is anticipated, either with the Pre-Field Engineering Report or during the DALT or TAB field work.

Ensure the Contractor is properly notified and aware of all support personnel needed to perform the TAB work. Maintain communication with the Contractor regarding support personnel throughout the duration of the TAB field work, including the TAB field acceptance testing checking.

Ensure all inspections and verifications necessary to start DALT field work and TAB field work are completely and successfully conducted before DALT and TAB field work is performed.

g. Technical Assistance: Provide technical assistance to the DALT and TAB field work.

h. Deficiencies Notification: Ensure the notifications of Construction Deficiencies are provided as specified herein. Comply with requirements of the paragraph DESIGN/CONSTRUCTION DEFICIENCIES.

i. Procedures: Develop the required TAB procedures for systems or system components not covered in the TAB Standard.

3. TAB Team Field Leader

a. Field manager: Manage, in the field, the accomplishment of the work specified in Part 3, EXECUTION.

b. Full time: Be present at the contract site when DALT field work or TAB field work is being performed by the TAB team; ensure day-to-day TAB team work accomplishments are in compliance with this section.

c. Prerequisite HVAC work: Do not bring the TAB team to the contract site until notification that all work items and inspections identified to the Contractor by the TAB team supervisor are completed, with all work items certified by the Contractor to be working as designed, reaches the office of the TAB Agency.

Appendix B

REPORTS - DALT and TAB

All submitted documentation must be typed, neat, and organized. All reports must have a title page, a certification page, sequentially numbered pages throughout, and a table of contents. Tables, lists, and diagrams must be titled. Generate and submit for approval the following documentation:

1. Pre-Field Engineering Report

a. DALT and TAB Procedures Summary

Submit a detailed narrative describing all aspects of the DALT and TAB field work to be performed. Clearly distinguish between DALT information and TAB information. Include the following:

(1) A list of the intended procedural steps for the DALT and TAB field work from start to finish. Indicate how each type of data measurement will be obtained. Include what Contractor support personnel are required for each step, and the tasks they need to perform.

(2) A list of the project's submittals that are needed by the TAB Firm in order to meet this Contract's requirements.

(3) The data presentation forms to be used in the report, with the preliminary information and initial design values filled in.

(4) A list of DALT and TAB instruments to be used, edited for this project, to include the instrument name and description, manufacturer, model number, scale range, published accuracy, most recent calibration date, and what the instrument will be used for on this project.

(5) A thorough checklist of the work items and inspections that need to be accomplished before DALT field work can be performed.

(6) A thorough checklist of the work items and inspections that need to be accomplished before the Season 1 TAB field work can be performed.

(7) A thorough checklist of the work items and inspections that need to be accomplished before the Season 2 TAB field work can be performed.

(8) The checklists specified above shall be individually developed and tailored specifically for the work under this contract. Refer to NEBB PROCEDURAL STANDARDS, Section III, "Preliminary TAB Procedures" under the paragraphs titled, "Air Distribution System Inspection" and "Hydronic Distribution System Inspection" for examples of items to include in the checklists.

b. Design Review Report:

Review the contract specifications and drawings to verify that the TAB work can be successfully accomplished in compliance with the

requirements of this section. Verify the presence and location of permanently installed test ports and other devices needed, including gauge cocks, thermometer wells, flow control devices, circuit setters, balancing valves, manual volume dampers, and required straight duct and pipe runs for accurate measurements.

Submit a typed report describing omissions and deficiencies in the HVAC system's design that would preclude the TAB team from accomplishing the DALT work and the TAB work requirements of this section. Provide a complete explanation including supporting documentation detailing the design deficiency. If no deficiencies are evident, state so in the report.

c. TAB Schematic Drawings

The schematic drawings to be used in the required reports, may include building floor plans, mechanical room plans, duct system plans, equipment elevations, and diagrams. Indicate intended TAB measurement locations, including where test ports need to be provided by the Contractor.

Show the following information on TAB Schematic Drawings:

(1) A unique number or mark for each piece of equipment or terminal.

(2) Air quantities at air terminals.

(3) Air quantities and temperatures from air handling unit schedules.

(4) Water quantities and temperatures from thermal energy transfer equipment schedules.

(5) Water quantities and heads from pump schedules.

(6) Water flow measurement fittings and balancing fittings.

d. Instrument Calibration Certificates

e. List of TAB Related Submittals
Prepare a list of the submittals from the Contract Submittal Register that relate to the successful accomplishment of all TAB. Ensure that the location and details of ports, terminals, connections, etc., necessary to perform TAB are identified on the submittals.

2. Pre-Final DALT Report

Report the data for the Pre-Final DALT Report meeting the following requirements:

a. Procedures: Describe how actual field test procedures differed from the previously approved DALT Procedures Summary.

b. Report format: Submit a comprehensive report for the DALT field work data using data presentation forms equivalent to the "Air Duct Leakage Test Summary Report Forms" located in the SMACNA 1972 CD. All form data must be recorded for each test iteration of each duct section selected. Report forms for each test must indicate either "Pass" or "Fail". In addition, submit in the report, a marked duct shop drawing which identifies each section of duct tested with assigned node

numbers for each section. Node numbers shall be included in the completed report forms to identify each duct section.

c. Calculations: Include a copy of all calculations prepared in determining the duct surface area and the allowable leakage of each duct test section.

d. Instruments: Include in the DALT reports copy(s) of the calibration curve for each of the DALT test orifices used for testing. List the types of instruments actually used to measure the data. Include in the listing each instrument's unique identification number, calibration date, and calibration expiration date. Instruments are to be calibrated within one year of the date of use in the field; instrument calibration is to be traceable to the measuring standards of the National Institute of Standards and Technology.

e. TAB Supervisor Approval: Include on the submitted report the typed name of the TAB supervisor and the dated signature of the TAB supervisor.

3. Certified Final DALT Report

On successful completion of all COTR field checks of the Pre-final DALT Report data for all systems, the TAB Supervisor shall assemble, review, sign and submit the Final DALT Report containing all Pre-Final DALT Reports to the Contracting Officer for approval.

4. TAB Reports

Submit TAB Reports for Proportional Balancing, Season 1, and Season 2 in the following manner:

a. Procedure Summary: Submit a copy of the approved DALT and TAB Procedures Summary. When applicable, provide notations describing how actual field procedures differed from the procedures listed.

b. Report format: Submit the completed data forms approved in the Pre-Field Engineering Report completed by TAB field team, reviewed, approved and signed by the TAB supervisor. Include a table of contents identifying by page number the location of each report. Report forms and report data shall be typewritten. Handwritten report forms or report data are not acceptable.

c. Schematic Drawings: Provide updated drawings and diagrams with final installed locations of all terminals and devices, any numbering changes, and actual test locations including duct traverse and static pressure measurement locations.

d. Air Static Pressure Profiles: Report static pressure profiles for air duct systems including: AHU-1 & 2 and DOAS-1 & 2. Report static pressure data for all supply, return, relief, exhaust and outside air ducts for the systems listed. The static pressure report data shall include, in addition to AABC or NEBB or TABB required data, the following:

(1) Report supply fan, return fan, relief fan, and exhaust fan inlet and discharge static pressures.

(2) Report static pressure drop across chilled water coils, DX coils,

hot water coils, steam coils, electric resistance heating coils and heat reclaim devices installed in unit cabinetry or the system ductwork.

(3) Report static pressure drop across outside air, return air, and supply air automatic control dampers, both proportional and two-position, installed in unit cabinetry.

(4) Report static pressure drop across air filters, acoustic silencers, moisture eliminators, air flow straighteners, air flow measuring stations or other pressure drop producing specialty items installed in unit cabinetry, or in the system ductwork. Examples of these specialty items are smoke detectors, white sound generators, RF shielding, wave guides, security bars, blast valves, small pipes passing through ductwork, and duct mounted humidifiers.

Do not report static pressure drop across duct fittings provided for the sole purpose of conveying air, such as elbows, transitions, offsets, plenums, manual dampers, and branch takes-offs.

(5) Report static pressure drop across outside air and relief/exhaust air louvers.

(6) Report static pressure readings of supply air, return air, exhaust/relief air, and outside air in duct at the point where these ducts connect to each air moving unit.

e. Duct Traverses: Report duct traverses for main and branch main supply, return, exhaust, relief and outside air ducts. This shall include all ducts, including those which lack 7 1/2 duct diameters upstream and 2 1/2 duct diameters downstream of straight duct unobstructed by duct fittings/offsets/elbows. Report all individual velocities on the duct traverses taken. Evaluate the suitability of the duct traverse measurement based on satisfying the qualifications for a pitot traverse plane as defined by AMCA 203, "Field Measurements", Section 8, paragraph 8.3, "Location of Traverse Plane". Report duct traverses for all entering and leaving unit airflows for all air handling equipment exceeding 2,000 cfm. Illustrate in an Equipment Diagram representative of the actual installation.

f. Open Paths: Ensure all required air and hydronic system open paths are identified.

g. Instruments: List the types of instruments actually used to measure the TAB data. Include in the listing each instrument's unique identification number, calibration date, and calibration expiration date.

Instrumentation, used for taking wet bulb temperature readings shall provide accuracy of plus or minus 5 percent at the measured face velocities.

h. Performance Curves: Include in the TAB Reports, factory pump curves and fan curves for pumps and fans TAB'd on the job, and manufacturer equipment data curves or tables correlating pressure drop and water flow rate.

i. Calibration Curves: The TAB Supervisor shall include, in the TAB Reports, a factory calibration curve for installed flow control balancing valves, flow venturis and flow orifices TAB'd on the job.

j. Supporting Documents: Provide copies of any request for information (RFIs) with the RFI responses, summaries of implemented change order(s), meeting minutes with participants, telephone transcripts with participants, electronic mail with addresses, and other documentation substantiating any deviations of the reported data from the initial contract design documents. Include this documentation in an appendix to the TAB report with sequential numbering of each separate document for reference to the data presentation forms.

k. Data From TAB Field Work: After completion of the TAB field work, prepare the TAB field data for TAB supervisor's review and approval signature, using the reporting forms approved in the Pre-Field Engineering Report. Data required by those approved data report forms shall be furnished by the TAB team. Record final hydronic differential pressure setpoint, hydronic system fill pressure, glycol percentage, pumps and fan motor frequency in maximum, fan motor frequency in minimum, fan brake horsepower, calibration coefficients, and factors, and primary air static pressure setpoint. Except as approved otherwise in writing by the Contracting Officer, the TAB work and thereby the TAB report shall be considered incomplete until the TAB work is accomplished to within the accuracy range specified in the paragraph WORKMANSHIP.

l. System configuration: Clearly identify system configurations and conditions affecting data for all reported data. Include all system operational parameters such as device positioning, system diversity, modes of operation, and setpoints necessary to setup and duplicate system cconfiguration.

Appendix C

DALT AND TAB SUBMITTAL AND WORK SCHEDULE

Perform the following items of work in the order listed adhering to the dates schedule specified below. Include the major items listed in this schedule in the project network analysis schedule required by Section 01 32 17.00 20 COST-LOADED NETWORK ANALYSIS SCHEDULES (NAS).

Submit Independent TAB Agency and TAB Personnel Qualifications: Within 42 calendar days after date of contract award.

Submit the Pre-Field Engineering Report: Within 28 days after receipt of the approved Independent TAB Agency and TAB Personnel Qualifications.

Meet with the COTR at the Pre-DALT/TAB Meeting: Within 14 calendar days.

(1) Prior to commencement of ductwork installation.

(2) Prior to the ductwork installation preparatory meeting per specification section 01 45 00.00 20 QUALITY CONTROL.

Advance Notice of Pre-Final DALT Field Work: After the completed installation of the HVAC duct system to be DALT'd, submit to the Contracting Officer an Advance Notice of Pre-Final DALT Field Work.

Ductwork Selected for DALT: Within 14 calendar days after receiving an acceptable Advance Notice of Pre-Final DALT Field Work, the Contracting Officer's technical representative (COTR) will select the project ductwork sections to be DALT'd.

DALT Field Work: Within 48 hours of COTR's selection, complete DALT field work on selected project ductwork.

Submit Pre-Final DALT Report: Within two working days after completion of DALT field work, submit Pre-final DALT Report. Separate Pre-final DALT reports may be submitted to allow phased testing from system to system.

Quality Assurance - COTR DALT Field Checks: Upon approval of the Pre-final DALT Report, the COTR's DALT field check work shall be scheduled with the Contracting Officer.

Submit Final DALT Report: Within 14 calendar days after successful completion of all DALT Work Field Checks

TAB field work for Season 1 may be accomplished concurrent with TAB field work for proportional balancing, when the ambient temperature is within Season 1 limits. When accomplished concurrently, Season 1 TAB Report submittal and Season 1 Quality Assurance shall be concurrent with the Proportional Balancing work items.

Advance Notice of TAB Field Work for Proportional Balancing: At a minimum of 14 calendar days prior to TAB Field Work, submit advance notice of TAB field work for proportional balancing.

TAB Field Work for Proportional Balancing: At a minimum of 84 calendar days prior to Beneficial Occupancy Date (BOD), accomplish TAB field work for proportional balancing, and Season 1, if concurrent.

Submit TAB Report for Proportional Balancing: Within 14 calendar days after completion of TAB field work for proportional balancing, and Season 1, if concurrent.

Proportional Balancing Quality Assurance - COTR TAB Field Acceptance Testing: 30 calendar days after TAB report for proportional balancing, and Season 1, if concurrent, is approved by the Contracting Officer, conduct TAB field acceptance testing.

Complete TAB Work for Proportional Balancing: Prior to BOD, complete all TAB work except Season 1 and Season 2 TAB work and submit Final TAB Report for Proportional Balancing.

When not accomplished concurrent with TAB field work for proportional balancing, accomplish the following seasonal items of work:

Advance Notice of Season 1 TAB Field Work: At a minimum of 14 calendar days prior to Season 1 TAB Field Work, submit advance notice of Season 1 TAB field work.

Season 1 TAB Field Work: At a minimum of 84 calendar days prior to BOD, and when the ambient temperature is within Season 1 limits, accomplish Season 1 TAB field work.

Submit Season 1 TAB Report: Within 14 calendar days after completion of Season 1 TAB field work.

Season 1 Quality Assurance - COTR TAB Field Acceptance Testing: 30 calendar days after Season 1 TAB report is approved by the Contracting Officer, conduct Season 1 TAB field acceptance testing.
Advance Notice of Season 2 TAB Field Work: At a minimum of 126 calendar days after CCD, submit Advance Notice of Season 2 TAB Field Work.

Season 2 TAB Field Work: Within 14 calendar days after date of advance notice of Season 2 TAB field work and when the ambient temperature is within Season 2 limits, accomplish Season 2 TAB field work.

Submit Season 2 TAB Report: Within 14 calendar days after completion of Season 2 TAB field work.

Season 2 Quality Assurance - COTR TAB Field Acceptance Testing: 28 calendar days after the Season 2 TAB report is approved by the Contracting Officer, conduct Season 2 field acceptance testing.

Complete Season 2 TAB Work: Within 14 calendar days after the completion of Season 2 TAB field data check, complete all TAB work.

Appendix D

REQUIREMENTS FOR DUCT AIR LEAK TESITNG

Appendix D					
REQUIREMENTS FOR DUCT AIR LEAK TESTING					
		SYSTEMS			
		P-1481 AHU-1	P-1482 AHU-1 & 2	P-1482 DOAS-1 & 2	P-1481 Exhaust System Unit No. EF-1
Duct System Static Pressure, in inches W.C.	for Supply	0.78	0.8	0.75	
	for Return	0.62	0.5	0.5	
	for Exhaust			0.5	0.4
	for Outside Air	0.25		0.5	
System Oval/Round Duct and Rectangular Duct SMACNA Seal Class	for Supply	A	A	A	
	for Return	A	A	A	
	for Exhaust			A	A
	for Outside Air	A		A	
System Oval/Round Duct SMACNA Leak Class	for Supply	6	12	12	
	for Return	12	12	12	
	for Exhaust			6	12
	for Outside Air	12		12	

Appendix D					
REQUIREMENTS FOR DUCT AIR LEAK TESTING					
		SYSTEMS			
		P-1481 AHU-1	P-1482 AHU-1 & 2	P-1482 DOAS-1 & 2	P-1481 Exhaust System Unit No. EF-1
System Rectangular Duct SMACNA Leak Class	for Supply				
	for Return	12			
	for Exhaust				24
	for Outside Air	12			
Duct Test Pressure, in inches W.C.	for Supply	2	1	1	
	for Return	1	1	1	
	for Exhaust			1	1
	for Outside Air	1		1	

-- End of Section --

THIS PAGE HAS BEEN INTENTIONALLY LEFT BLANK

SECTION 23 07 00

THERMAL INSULATION FOR MECHANICAL SYSTEMS
02/13

PART 1 GENERAL

1.1 REFERENCES

The publications listed below form a part of this specification to the extent referenced. The publications are referred to within the text by the basic designation only. At the discretion of the Government, the manufacturer of any material supplied will be required to furnish test reports pertaining to any of the tests necessary to assure compliance with the standard or standards referenced in this specification.

AMERICAN SOCIETY OF HEATING, REFRIGERATING AND AIR-CONDITIONING ENGINEERS (ASHRAE)

ASHRAE 90.1 - IP	(2013) Energy Standard for Buildings Except Low-Rise Residential Buildings

ASTM INTERNATIONAL (ASTM)

ASTM A167	(2011) Standard Specification for Stainless and Heat-Resisting Chromium-Nickel Steel Plate, Sheet, and Strip
ASTM A580/A580M	(2016) Standard Specification for Stainless Steel Wire
ASTM B209	(2014) Standard Specification for Aluminum and Aluminum-Alloy Sheet and Plate
ASTM C1136	(2012) Standard Specification for Flexible, Low Permeance Vapor Retarders for Thermal Insulation
ASTM C1710	(2011) Standard Guide for Installation of Flexible Closed Cell Preformed Insulation in Tube and Sheet Form
ASTM C195	(2007; R 2013) Standard Specification for Mineral Fiber Thermal Insulating Cement
ASTM C450	(2008) Standard Practice for Fabrication of Thermal Insulating Fitting Covers for NPS Piping, and Vessel Lagging
ASTM C534/C534M	(2014) Standard Specification for Preformed Flexible Elastomeric Cellular Thermal Insulation in Sheet and Tubular Form
ASTM C552	(2016a) Standard Specification for Cellular Glass Thermal Insulation

ASTM C612	(2014) Mineral Fiber Block and Board Thermal Insulation
ASTM C647	(2008; R 2013) Properties and Tests of Mastics and Coating Finishes for Thermal Insulation
ASTM C795	(2008; R 2013) Standard Specification for Thermal Insulation for Use in Contact with Austenitic Stainless Steel
ASTM C916	(2014) Standard Specification for Adhesives for Duct Thermal Insulation
ASTM C920	(2014a) Standard Specification for Elastomeric Joint Sealants
ASTM C921	(2010) Standard Practice for Determining the Properties of Jacketing Materials for Thermal Insulation
ASTM D2863	(2013) Measuring the Minimum Oxygen Concentration to Support Candle-Like Combustion of Plastics (Oxygen Index)
ASTM D5590	(2000; R 2010; E 2012) Standard Test Method for Determining the Resistance of Paint Films and Related Coatings to Fungal Defacement by Accelerated Four-Week Agar Plate Assay
ASTM D882	(2012) Tensile Properties of Thin Plastic Sheeting
ASTM E2231	(2015) Specimen Preparation and Mounting of Pipe and Duct Insulation Materials to Assess Surface Burning Characteristics
ASTM E84	(2016) Standard Test Method for Surface Burning Characteristics of Building Materials
ASTM E96/E96M	(2016) Standard Test Methods for Water Vapor Transmission of Materials

FM GLOBAL (FM)

FM APP GUIDE	(updated on-line) Approval Guide http://www.approvalguide.com/

MANUFACTURERS STANDARDIZATION SOCIETY OF THE VALVE AND FITTINGS INDUSTRY (MSS)

MSS SP-58	(1993; Reaffirmed 2010) Pipe Hangers and Supports - Materials, Design and Manufacture, Selection, Application, and Installation

MIDWEST INSULATION CONTRACTORS ASSOCIATION (MICA)

MICA Insulation Stds	(1999) National Commercial & Industrial Insulation Standards

NATIONAL FIRE PROTECTION ASSOCIATION (NFPA)

NFPA 90A	(2015) Standard for the Installation of Air Conditioning and Ventilating Systems
NFPA 90B	(2015) Standard for the Installation of Warm Air Heating and Air Conditioning Systems

U.S. DEPARTMENT OF DEFENSE (DOD)

MIL-A-24179	(1969; Rev A; Am 2 1980; Notice 1 1987) Adhesive, Flexible Unicellular-Plastic Thermal Insulation
MIL-A-3316	(1987; Rev C; Am 2 1990) Adhesives, Fire-Resistant, Thermal Insulation
MIL-PRF-19565	(1988; Rev C) Coating Compounds, Thermal Insulation, Fire- and Water-Resistant, Vapor-Barrier

UNDERWRITERS LABORATORIES (UL)

UL 723	(2008; Reprint Aug 2013) Test for Surface Burning Characteristics of Building Materials
UL 94	(2013; Reprint Mar 2016) UL Standard for Safety Tests for Flammability of Plastic Materials for Parts in Devices and Appliances

1.2 SYSTEM DESCRIPTION

1.2.1 General

Provide field-applied insulation and accessories on mechanical systems as specified herein; factory-applied insulation is specified under the piping, duct or equipment to be insulated. Field applied insulation materials required for use on Government-furnished items as listed in the SPECIAL CONTRACT REQUIREMENTS shall be furnished and installed by the Contractor.

1.2.2 Recycled Materials

Provide thermal insulation containing recycled materials to the extent practicable, provided that the materials meet all other requirements of this section. The minimum recycled material content of the following insulation are:

Rock Wool	75 percent slag of weight
Fiberglass	20-25 percent glass cullet by weight
Rigid Foam	9 percent recovered material

1.3 SUBMITTALS

Government approval is required for submittals with a "G" designation; submittals not having a "G" designation are for Contractor Quality Control approval. Submittals with an "S" are for inclusion in the Sustainability Notebook, in conformance to Section 01 33 29 SUSTAINABILITY REPORTING. Submit the following in accordance with Section 01 33 00 SUBMITTAL PROCEDURES:

Submit the TWO SD types, SD-03 Product Data, and SD-08 Manufacturer's Instructions at the same time for each system.

SD-03 Product Data

Pipe Insulation Systems; G
Duct Insulation Systems; G
Equipment Insulation Systems; G

SD-04 Samples

Thermal Insulation; G

SD-08 Manufacturer's Instructions

Pipe Insulation Systems; G
Duct Insulation Systems; G
Equipment Insulation Systems; G

SD-11 Closeout Submittals

Reduce Volatile Organic Compounds (VOC) for Caulking, Sealant and Adhesive Materials; S
Recycled Content for Pipe and Ductwork Insulation Materials; S

1.4 QUALITY ASSURANCE

1.4.1 Installer Qualification

Qualified installers shall have successfully completed three or more similar type jobs within the last 5 years.

1.5 DELIVERY, STORAGE, AND HANDLING

Materials shall be delivered in the manufacturer's unopened containers. Materials delivered and placed in storage shall be provided with protection from weather, humidity, dirt, dust and other contaminants. The Contracting Officer may reject insulation material and supplies that become dirty, dusty, wet, or contaminated by some other means. Packages or standard containers of insulation, jacket material, cements, adhesives, and coatings delivered for use, and samples required for approval shall have manufacturer's stamp or label attached giving the name of the manufacturer and brand, and a description of the material, date codes, and

approximate shelf life (if applicable). Insulation packages and containers shall be asbestos free.

PART 2 PRODUCTS

2.1 PRODUCT SUSTAINABILITY CRITERIA

For products in this section, where applicable and to extent allowed by performance criteria, provide and document the following:

2.1.1 Reduce Volatile Organic Compounds (VOC) for Caulking, Sealant and Adhesive Materials

For interior applications, provide caulking, sealant and adhesive materials meeting the reduced VOC requirements as stated within Section 01 33 29 SUSTAINABILITY REPORTING paragraph REDUCE VOLATILE ORGANIC COMPOUNDS (VOC).

2.1.2 Recycled Content for Pipe and Ductwork Insulation Materials

Provide documentation in conformance with Section 01 33 29 SUSTAINABILITY REPORTING that the following products meet the recycled content requirements as outlined in this section:

a. Pipe Insulation Systems
b. Duct Insulation Systems

2.2 STANDARD PRODUCTS

Provide materials which are the standard products of manufacturers regularly engaged in the manufacture of such products and that essentially duplicate items that have been in satisfactory use for at least 2 years prior to bid opening. Submit a complete list of materials, including manufacturer's descriptive technical literature, performance data, catalog cuts, and installation instructions. The product number, k-value, thickness and furnished accessories including adhesives, sealants and jackets for each mechanical system requiring insulation shall be included. The product data must be copyrighted, have an identifying or publication number, and shall have been published prior to the issuance date of this solicitation. Materials furnished under this section shall be submitted together in a booklet.

2.2.1 Insulation System

Provide insulation systems in accordance with the approved MICA National Insulation Standards plates as supplemented by this specification. Provide field-applied insulation for heating, ventilating, and cooling (HVAC) air distribution systems and piping systems that are located within, on, under, and adjacent to buildings; and for plumbing systems. Provide CFC and HCFC free insulation.

2.2.2 Surface Burning Characteristics

Unless otherwise specified, insulation must have a maximum flame spread index of 25 and a maximum smoke developed index of 50 when tested in accordance with ASTM E84. Flame spread, and smoke developed indexes, shall be determined by ASTM E84 or UL 723. Test insulation in the same density and installed thickness as the material to be used in the actual construction. Prepare and mount test specimens according to

ASTM E2231.

2.3 MATERIALS

Provide insulation that meets or exceed the requirements of ASHRAE 90.1 - IP. Insulation exterior shall be cleanable, grease resistant, non-flaking and non-peeling. Materials shall be compatible and shall not contribute to corrosion, soften, or otherwise attack surfaces to which applied in either wet or dry state. Materials to be used on stainless steel surfaces shall meet ASTM C795 requirements. Calcium silicate shall not be used on chilled or cold water systems. Materials shall be asbestos free. Provide product recognized under UL 94 (if containing plastic) and listed in FM APP GUIDE.

2.3.1 Adhesives

2.3.1.1 Acoustical Lining Insulation Adhesive

Adhesive shall be a nonflammable, fire-resistant adhesive conforming to ASTM C916, Type I.

2.3.1.2 Mineral Fiber Insulation Cement

Cement shall be in accordance with ASTM C195.

2.3.1.3 Lagging Adhesive

Lagging is the material used for thermal insulation, especially around a cylindrical object. This may include the insulation as well as the cloth/material covering the insulation. To resist mold/mildew, lagging adhesive shall meet ASTM D5590 with 0 growth rating. Lagging adhesives shall be nonflammable and fire-resistant and shall have a maximum flame spread index of 25 and a maximum smoke developed index of 50 when tested in accordance with ASTM E84. Adhesive shall be MIL-A-3316, Class 1, pigmented white and be suitable for bonding fibrous glass cloth to faced and unfaced fibrous glass insulation board; for bonding cotton brattice cloth to faced and unfaced fibrous glass insulation board; for sealing edges of and bonding glass tape to joints of fibrous glass board; for bonding lagging cloth to thermal insulation; or Class 2 for attaching fibrous glass insulation to metal surfaces. Lagging adhesives shall be applied in strict accordance with the manufacturer's recommendations for pipe and duct insulation.

2.3.1.4 Contact Adhesive

Adhesives may be any of, but not limited to, the neoprene based, rubber based, or elastomeric type that have a maximum flame spread index of 25 and a maximum smoke developed index of 50 when tested in accordance with ASTM E84. The adhesive shall not adversely affect, initially or in service, the insulation to which it is applied, nor shall it cause any corrosive effect on metal to which it is applied. Any solvent dispersing medium or volatile component of the adhesive shall have no objectionable odor and shall not contain any benzene or carbon tetrachloride. The dried adhesive shall not emit nauseous, irritating, or toxic volatile matters or aerosols when the adhesive is heated to any temperature up to 212 degrees F. The dried adhesive shall be nonflammable and fire resistant. Flexible Elastomeric Adhesive: Comply with MIL-A-24179, Type II, Class I. Provide product listed in FM APP GUIDE.

2.3.2 Caulking

ASTM C920, Type S, Grade NS, Class 25, Use A.

2.3.3 Corner Angles

Nominal 0.016 inch aluminum 1 by 1 inch with factory applied kraft backing. Aluminum shall be ASTM B209, Alloy 3003, 3105, or 5005.

2.3.4 Fittings

Fabricated Fittings are the prefabricated fittings for flexible elastomeric pipe insulation systems in accordance with ASTM C1710. Together with the flexible elastomeric tubes, they provide complete system integrity for retarding heat gain and controlling condensation drip from chilled-water and refrigeration systems. Flexible elastomeric, fabricated fittings provide thermal protection (0.25 k) and condensation resistance (0.05 Water Vapor Transmission factor). For satisfactory performance, properly installed protective vapor retarder/barriers and vapor stops shall be used on high relative humidity and below ambient temperature applications to reduce movement of moisture through or around the insulation to the colder interior surface.

2.3.5 Finishing Cement

ASTM C450: Mineral fiber hydraulic-setting thermal insulating and finishing cement. All cements that may come in contact with Austenitic stainless steel must comply with ASTM C795.

2.3.6 Fibrous Glass Cloth and Glass Tape

Fibrous glass cloth, with 20X20 maximum mesh size, and glass tape shall have maximum flame spread index of 25 and a maximum smoke developed index of 50 when tested in accordance with ASTM E84. Tape shall be 4 inch wide rolls. Class 3 tape shall be 4.5 ounces/square yard. Elastomeric Foam Tape: Black vapor-retarder foam tape with acrylic adhesive containing an anti-microbial additive.

2.3.7 Staples

Outward clinching type ASTM A167, Type 304 or 316 stainless steel.

2.3.8 Jackets

2.3.8.1 Aluminum Jackets

Aluminum jackets shall be corrugated, embossed or smooth sheet, 0.016 inch nominal thickness; ASTM B209, Temper H14, Temper H16, Alloy 3003, 5005, or 3105. Corrugated aluminum jacket shall not be used outdoors. Aluminum jacket securing bands shall be Type 304 stainless steel, 0.015 inch thick, 1/2 inch wide for pipe under 12 inch diameter and 3/4 inch wide for pipe over 12 inch and larger diameter. Aluminum jacket circumferential seam bands shall be 2 by 0.016 inch aluminum matching jacket material. Bands for insulation below ground shall be 3/4 by 0.020 inch thick stainless steel, or fiberglass reinforced tape. The jacket may, at the option of the Contractor, be provided with a factory fabricated Pittsburgh or "Z" type longitudinal joint. When the "Z" joint is used, the bands at the circumferential joints shall be designed by the manufacturer to seal the joints and hold the jacket in place.

2.3.8.2 Polyvinyl Chloride (PVC) Jackets

Polyvinyl chloride (PVC) jacket and fitting covers shall have high impact strength, ultraviolet (UV) resistant rating or treatment and moderate chemical resistance with minimum thickness 0.030 inch.

2.3.8.3 Vapor Barrier/Weatherproofing Jacket

Vapor barrier/weatherproofing jacket shall be laminated self-adhesive, greater than 3 plies standard grade, silver, white, black and embossed or greater than 8 ply (minimum 2.9 mils adhesive); with 0.0000 permeability when tested in accordance with ASTM E96/E96M, using the water transmission rate test method; heavy duty, white or natural; and UV resistant. Flexible Elastomeric exterior foam with factory applied, UV Jacket made with a cold weather acrylic adhesive. Construction of laminate designed to provide UV resistance, high puncture, tear resistance and excellent Water Vapor Transmission (WVT) rate.

2.3.8.4 Vapor Barrier/Vapor Retarder

Apply the following criteria to determine which system is required.

a. On ducts, piping and equipment operating below 70 degrees F or located outside shall be equipped with a vapor barrier.

b. Ducts, pipes and equipment that are located inside and that always operate above 70 degrees F shall be installed with a vapor retarder where required as stated in paragraph VAPOR RETARDER REQUIRED.

2.3.9 Vapor Retarder Required

ASTM C921, Type I, minimum puncture resistance 50 Beach units on all surfaces except concealed ductwork, where a minimum puncture resistance of 25 Beach units is acceptable. Minimum tensile strength, 35 pounds/inch width. ASTM C921, Type II, minimum puncture resistance 25 Beach units, tensile strength minimum 20 pounds/inch width. Jackets used on insulation exposed in finished areas shall have white finish suitable for painting without sizing. Based on the application, insulation materials that require manufacturer or fabricator applied pipe insulation jackets are cellular glass, when all joints are sealed with a vapor barrier mastic, and mineral fiber. All non-metallic jackets shall have a maximum flame spread index of 25 and a maximum smoke developed index of 50 when tested in accordance with ASTM E84. Flexible elastomerics require (in addition to vapor barrier skin) vapor retarder jacketing for high relative humidity and below ambient temperature applications.

2.3.9.1 White Vapor Retarder All Service Jacket (ASJ)

ASJ is for use on hot/cold pipes, ducts, or equipment indoors or outdoors if covered by a suitable protective jacket. The product shall meet all physical property and performance requirements of ASTM C1136, Type I, except the burst strength shall be a minimum of 85 psi. ASTM D2863 Limited Oxygen Index (LOI) shall be a minimum of 31.

In addition, neither the outer exposed surface nor the inner-most surface contacting the insulation shall be paper or other moisture-sensitive material. The outer exposed surface shall be white and have an emittance of not less than 0.80. The outer exposed surface shall be paintable.

2.3.9.2 Vapor Retarder/Vapor Barrier Mastic Coatings

2.3.9.2.1 Vapor Barrier

The vapor barrier shall be self adhesive (minimum 2 mils adhesive, 3 mils embossed) greater than 3 plies standard grade, silver, white, black and embossed white jacket for use on hot/cold pipes. Permeability shall be less than 0.02 when tested in accordance with ASTM E96/E96M. Products shall meet UL 723 or ASTM E84 flame and smoke requirements and shall be UV resistant.

2.3.9.2.2 Vapor Retarder

The vapor retarder coating shall be fire and water resistant and appropriately selected for either outdoor or indoor service. Color shall be white. The water vapor permeance of the compound shall be 0.013 perms or less at 43 mils dry film thickness as determined according to procedure B of ASTM E96/E96M utilizing apparatus described in ASTM E96/E96M. The coating shall be nonflammable, fire resistant type. Coating shall meet MIL-PRF-19565 Type II (if selected for indoor service) and be Qualified Products Database listed. All other application and service properties shall be in accordance with ASTM C647.

2.3.9.3 Laminated Film Vapor Retarder

ASTM C1136, Type I, maximum moisture vapor transmission 0.02 perms, minimum puncture resistance 50 Beach units on all surfaces except concealed ductwork; where Type II, maximum moisture vapor transmission 0.02 perms, a minimum puncture resistance of 25 Beach units is acceptable. Vapor retarder shall have a maximum flame spread index of 25 and a maximum smoke developed index of 50 when tested in accordance with ASTM E84. Flexible Elastomeric exterior foam with factory applied UV Jacket. Construction of laminate designed to provide UV resistance, high puncture, tear resistance and an excellent WVT rate.

2.3.9.4 Polyvinylidene Chloride (PVDC) Film Vapor Retarder

The PVDC film vapor retarder shall have a maximum moisture vapor transmission of 0.02 perms, minimum puncture resistance of 150 Beach units, a minimum tensile strength in any direction of 30 lb/inch when tested in accordance with ASTM D882, and a maximum flame spread index of 25 and a maximum smoke developed index of 50 when tested in accordance with ASTM E84.

2.3.9.5 Polyvinylidene Chloride Vapor Retarder Adhesive Tape

Requirements must meet the same as specified for Laminated Film Vapor Retarder above.

2.3.9.6 Vapor Barrier/Weather Barrier

The vapor barrier shall be greater than 3 ply self adhesive laminate -white vapor barrier jacket- superior performance (less than 0.0000 permeability when tested in accordance with ASTM E96/E96M). Vapor barrier shall meet UL 723 or ASTM E84 25 flame and 50 smoke requirements; and UV resistant. Minimum burst strength 185 psi in accordance with . Tensile strength 68 lb/inch width (PSTC-1000). Tape shall be as specified for laminated film vapor barrier above.

2.3.10 Vapor Retarder Not Required

ASTM C921, Type II, Class D, minimum puncture resistance 50 Beach units on all surfaces except ductwork, where Type IV, maximum moisture vapor transmission 0.10, a minimum puncture resistance of 25 Beach units is acceptable. Jacket shall have a maximum flame spread index of 25 and a maximum smoke developed index of 50 when tested in accordance with ASTM E84.

2.3.11 Wire

Soft annealed ASTM A580/A580M Type 302, 304 or 316 stainless steel, 16 or 18 gauge.

2.3.12 Insulation Bands

Insulation bands shall be 1/2 inch wide; 26 gauge stainless steel.

2.3.13 Sealants

Sealants shall be chosen from the butyl polymer type, the styrene-butadiene rubber type, or the butyl type of sealants. Sealants shall have a maximum permeance of 0.02 perms based on Procedure B for ASTM E96/E96M, and a maximum flame spread index of 25 and a maximum smoke developed index of 50 when tested in accordance with ASTM E84.

2.4 PIPE INSULATION SYSTEMS

Conform insulation materials to Table 1 and minimum insulation thickness as listed in Table 2 and meet or exceed the requirements of ASHRAE 90.1 - IP. Comply with EPA requirements for material with recycled content in accordance with Section 01 33 29 SUSTAINABILITY REPORTING, paragraph RECYCLED CONTENT. Limit pipe insulation materials to those listed herein and meeting the following requirements:

2.4.1 Aboveground Cold Pipeline (-30 to 60 deg. F)

Insulation for outdoor, indoor, exposed or concealed applications, shall be as follows:

2.4.1.1 Cellular Glass

ASTM C552, Type II, and Type III. Supply the insulation from the fabricator with (paragraph WHITE VAPOR RETARDER ALL SERVICE JACKET (ASJ)) ASJ vapor retarder and installed with all longitudinal overlaps sealed and all circumferential joints ASJ taped or supply the insulation unfaced from the fabricator and install with all longitudinal and circumferential joints sealed with vapor barrier mastic.

2.4.1.2 Flexible Elastomeric Cellular Insulation

Closed-cell, foam- or expanded-rubber materials containing anti-microbial additive, complying with ASTM C534/C534M, Grade 1, Type I or II. Type I, Grade 1 for tubular materials. Type II, Grade 1, for sheet materials. Type I and II shall have vapor retarder/vapor barrier skin on one or both sides of the insulation, and require an additional exterior vapor retarder covering for high relative humidity and below ambient temperature applications.

2.5 DUCT INSULATION SYSTEMS

2.5.1 Field Applied Insulation

2.5.1.1 Rigid Insulation

Rigid mineral fiber in accordance with ASTM C612, Class 2 (maximum surface temperature 400 degrees F), 3 pcf average, 1-1/2 inch thick, Type IA, IB, II, III, and IV.

2.5.2 Duct Insulation Jackets

2.5.2.1 All-Purpose Jacket

Provide insulation with insulation manufacturer's standard reinforced fire-retardant jacket with or without integral vapor barrier as required by the service. In exposed locations, provide jacket with a white surface suitable for field painting.

2.5.2.2 Metal Jackets

2.5.2.2.1 Aluminum Jackets

ASTM B209, Temper H14, minimum thickness of 27 gauge (0.016 inch), with factory-applied polyethylene and kraft paper moisture barrier on inside surface. Provide smooth surface jackets for jacket outside dimension 8 inches and larger. Provide corrugated surface jackets for jacket outside dimension 8 inches and larger. Provide stainless steel bands, minimum width of 1/2 inch.

2.5.2.3 Vapor Barrier/Weatherproofing Jacket

Vapor barrier/weatherproofing jacket shall be laminated self-adhesive (minimum 2 mils adhesive, 3 mils embossed) less than 0.0000 permeability, (greater than 3 ply, standard grade, silver, white, black and embossed or greater than 8 ply (minimum 2.9 mils adhesive), heavy duty white or natural).

2.6 EQUIPMENT INSULATION SYSTEMS

Insulate equipment and accessories as specified in Tables 5 and 6. In outside locations, provide insulation 1/2 inch thicker than specified. Increase the specified insulation thickness for equipment where necessary to equal the thickness of angles or other structural members to make a smooth, exterior surface. Submit a booklet containing manufacturer's published installation instructions for the insulation systems. The instructions must be copyrighted, have an identifying or publication number, and shall have been published prior to the issuance date of this solicitation. A booklet is also required by paragraphs titled: Pipe Insulation Systems and Duct Insulation Systems.

PART 3 EXECUTION

3.1 APPLICATION - GENERAL

Insulation shall only be applied to unheated and uncooled piping and equipment. Flexible elastomeric cellular insulation shall not be compressed at joists, studs, columns, ducts, hangers, etc. The insulation shall not pull apart after a one hour period; any insulation found to pull

apart after one hour, shall be replaced.

3.1.1 Installation

Except as otherwise specified, material shall be installed in accordance with the manufacturer's written instructions. Insulation materials shall not be applied until tests specified in other sections of this specification are completed. Material such as rust, scale, dirt and moisture shall be removed from surfaces to receive insulation. Insulation shall be kept clean and dry. Insulation shall not be removed from its shipping containers until the day it is ready to use and shall be returned to like containers or equally protected from dirt and moisture at the end of each workday. Insulation that becomes dirty shall be thoroughly cleaned prior to use. If insulation becomes wet or if cleaning does not restore the surfaces to like new condition, the insulation will be rejected, and shall be immediately removed from the jobsite. Joints shall be staggered on multi layer insulation. Mineral fiber thermal insulating cement shall be mixed with demineralized water when used on stainless steel surfaces. Insulation, jacketing and accessories shall be installed in accordance with MICA Insulation Stds plates except where modified herein or on the drawings.

3.1.2 Firestopping

Where pipes and ducts pass through fire walls, fire partitions, above grade floors, and fire rated chase walls, the penetration shall be sealed with fire stopping materials as specified in Section 07 84 00 FIRESTOPPING. The protection of ducts at point of passage through firewalls must be in accordance with NFPA 90A and/or NFPA 90B. All other penetrations, such as piping, conduit, and wiring, through firewalls must be protected with a material or system of the same hourly rating that is listed by UL, FM, or a NRTL.

3.1.3 Painting and Finishing

Painting shall be as specified in Section 09 90 00 PAINTS AND COATINGS.

3.1.4 Installation of Flexible Elastomeric Cellular Insulation

Install flexible elastomeric cellular insulation with seams and joints sealed with rubberized contact adhesive. Flexible elastomeric cellular insulation shall not be used on surfaces greater than 220 degrees F. Stagger seams when applying multiple layers of insulation. Protect insulation exposed to weather and not shown to have vapor barrier weatherproof jacketing with two coats of UV resistant finish or PVC or metal jacketing as recommended by the manufacturer after the adhesive is dry and cured.

3.1.4.1 Adhesive Application

Apply a brush coating of adhesive to both butt ends to be joined and to both slit surfaces to be sealed. Allow the adhesive to set until dry to touch but tacky under slight pressure before joining the surfaces. Insulation seals at seams and joints shall not be capable of being pulled apart one hour after application. Insulation that can be pulled apart one hour after installation shall be replaced.

3.1.4.2 Adhesive Safety Precautions

Use natural cross-ventilation, local (mechanical) pickup, and/or general area (mechanical) ventilation to prevent an accumulation of solvent vapors, keeping in mind the ventilation pattern must remove any heavier-than-air solvent vapors from lower levels of the workspaces. Gloves and spectacle-type safety glasses are recommended in accordance with safe installation practices.

3.1.5 Welding

No welding shall be done on piping, duct or equipment without written approval of the Contracting Officer. The capacitor discharge welding process may be used for securing metal fasteners to duct.

3.1.6 Pipes/Ducts/Equipment That Require Insulation

Insulation is required on all pipes, ducts, or equipment, except for omitted items as specified.

3.2 PIPE INSULATION SYSTEMS INSTALLATION

3.2.1 Pipe Insulation

3.2.1.1 General

Pipe insulation shall be installed on aboveground hot and cold pipeline systems as specified below to form a continuous thermal retarder/barrier, including straight runs, fittings and appurtenances unless specified otherwise. Installation shall be with full length units of insulation and using a single cut piece to complete a run. Cut pieces or scraps abutting each other shall not be used. Pipe insulation shall be omitted on the following:

a. Pipe used solely for fire protection.

c. Sanitary drain lines.

d. Air chambers.

e. Adjacent insulation.

f. ASME stamps.

g. Access plates of fan housings.

h. Cleanouts or handholes.

3.2.1.2 Pipes Passing Through Walls, Roofs, and Floors

Pipe insulation shall be continuous through the sleeve.

Provide an aluminum jacket or vapor barrier/weatherproofing self adhesive jacket (minimum 2 mils adhesive, 3 mils embossed) less than 0.0000 permeability, greater than 3 ply standard grade, silver, white, black and embossed with factory applied moisture retarder over the insulation wherever penetrations require sealing.

3.2.1.2.1 Penetrate Interior Walls

The aluminum jacket or vapor barrier/weatherproofing - self adhesive

jacket (minimum 2 mils adhesive, 3 mils embossed) less than 0.0000 permeability, greater than 3 plies standard grade, silver, white, black and embossed shall extend 2 inches beyond either side of the wall and shall be secured on each end with a band.

3.2.1.2.2 Penetrating Floors

Extend the aluminum jacket from a point below the backup material to a point 10 inches above the floor with one band at the floor and one not more than 1 inch from the end of the aluminum jacket.

3.2.1.2.3 Penetrating Waterproofed Floors

Extend the aluminum jacket from below the backup material to a point 2 inches above the flashing with a band 1 inch from the end of the aluminum jacket.

3.2.1.2.4 Penetrating Exterior Walls

Continue the aluminum jacket required for pipe exposed to weather through the sleeve to a point 2 inches beyond the interior surface of the wall.

3.2.1.3 Pipes Passing Through Hangers

Insulation, whether hot or cold application, shall be continuous through hangers. All horizontal pipes 2 inches and smaller shall be supported on hangers with the addition of a Type 40 protection shield to protect the insulation in accordance with MSS SP-58. Whenever insulation shows signs of being compressed, or when the insulation or jacket shows visible signs of distortion at or near the support shield, insulation inserts as specified below for piping larger than 2 inches shall be installed, or factory insulated hangers (designed with a load bearing core) can be used.

3.2.1.3.1 Horizontal Pipes Larger Than 2 Inches at 60 Degrees F and Above

Supported on hangers in accordance with MSS SP-58, and Section 22 00 00 PLUMBING, GENERAL PURPOSE.

3.2.1.3.2 Horizontal Pipes Larger Than 2 Inches and Below 60 Degrees F

Supported on hangers with the addition of a Type 40 protection shield in accordance with MSS SP-58. An insulation insert of cellular glass, prefabricated insulation pipe hangers, or perlite above 80 degrees F shall be installed above each shield. The insert shall cover not less than the bottom 180-degree arc of the pipe. Inserts shall be the same thickness as the insulation, and shall extend 2 inches on each end beyond the protection shield. When insulation inserts are required in accordance with the above, and the insulation thickness is less than 1 inch, wooden or cork dowels or blocks may be installed between the pipe and the shield to prevent the weight of the pipe from crushing the insulation, as an option to installing insulation inserts. The insulation jacket shall be continuous over the wooden dowel, wooden block, or insulation insert.

3.2.1.3.3 Vertical Pipes

Supported with either Type 8 or Type 42 riser clamps with the addition of two Type 40 protection shields in accordance with MSS SP-58 covering the 360-degree arc of the insulation. An insulation insert of cellular glass or calcium silicate shall be installed between each shield and the pipe.

The insert shall cover the 360-degree arc of the pipe. Inserts shall be the same thickness as the insulation, and shall extend 2 inches on each end beyond the protection shield. When insulation inserts are required in accordance with the above, and the insulation thickness is less than 1 inch, wooden or cork dowels or blocks may be installed between the pipe and the shield to prevent the hanger from crushing the insulation, as an option instead of installing insulation inserts. The insulation jacket shall be continuous over the wooden dowel, wooden block, or insulation insert. The vertical weight of the pipe shall be supported with hangers located in a horizontal section of the pipe. When the pipe riser is longer than 30 feet, the weight of the pipe shall be additionally supported with hangers in the vertical run of the pipe that are directly clamped to the pipe, penetrating the pipe insulation. These hangers shall be insulated and the insulation jacket sealed as indicated herein for anchors in a similar service.

3.2.1.3.4 Inserts

Covered with a jacket material of the same appearance and quality as the adjoining pipe insulation jacket, overlap the adjoining pipe jacket 1-1/2 inches, and seal as required for the pipe jacket. The jacket material used to cover inserts in flexible elastomeric cellular insulation shall conform to ASTM C1136, Type 1, and is allowed to be of a different material than the adjoining insulation material.

3.2.1.4 Flexible Elastomeric Cellular Pipe Insulation

Flexible elastomeric cellular pipe insulation shall be tubular form for pipe sizes 6 inches and less. Grade 1, Type II sheet insulation used on pipes larger than 6 inches shall not be stretched around the pipe. On pipes larger than 12 inches, the insulation shall be adhered directly to the pipe on the lower 1/3 of the pipe. Seams shall be staggered when applying multiple layers of insulation. Sweat fittings shall be insulated with miter-cut pieces the same size as on adjacent piping. Screwed fittings shall be insulated with sleeved fitting covers fabricated from miter-cut pieces and shall be overlapped and sealed to the adjacent pipe insulation. Type II requires an additional exterior vapor retarder/barrier covering for high relative humidity and below ambient temperature applications.

3.2.1.5 Pipes in high abuse areas.

In high abuse areas such as janitor closets and traffic areas in equipment rooms, kitchens, and mechanical rooms, aluminum or flexible laminate cladding (comprised of elastomeric, plastic or metal foil laminate) laminated self-adhesive (minimum 2 mils adhesive, 3 mils embossed) vapor barrier/weatherproofing jacket, - less than 0.0000 permeability; (greater than 3 ply, standard grade, silver, white, black and embossed) aluminum jackets shall be utilized. Pipe insulation to the 6 foot level shall be protected.

3.2.1.6 Pipe Insulation Material and Thickness

Pipe insulation materials must be as listed in Table 1 and must meet or exceed the requirements of ASHRAE 90.1 - IP.

TABLE 1					
Insulation Material for Piping					
Service					
	Material	Specification	Type	Class	VR/VB Req'd
Refrigerant Suction Piping (35 degrees F nominal)					
	Flexible Elastomeric Cellular	ASTM C534/C534M	I		No
	Cellular Glass	ASTM C552	II	1	Yes
Condensate Drain Located Inside Building					
	Cellular Glass	ASTM C552	II	2	No
Note: VR/VB = Vapor Retarder/Vapor Barrier					

TABLE 2						
Piping Insulation Thickness (inch) Do not use integral wicking material in Chilled water applications exposed to outdoor ambient conditions in climatic zones 1 through 4.						
Service						
	Material	Tube And Pipe Size (inch)				
		<1	1-<1.5	1.5-<4	4-<8	> or = >8
Refrigerant Suction Piping (35 degrees F nominal)						
	Flexible Elastomeric Cellular	1	1	1	N/A	N/A
	Cellular Glass	1.5	1.5	1.5	1.5	1.5
Condensate Drain Located Inside Building						
	Cellular Glass	1.5	1.5	1.5	1.5	1.5

3.2.2 Aboveground Cold Pipelines

The following cold pipelines for minus 30 to plus 60 degrees F, shall be insulated in accordance with Table 2 except those piping listed in subparagraph Pipe Insulation in PART 3 as to be omitted. This includes but is not limited to the following:

a. Refrigerant suction lines.

b. Air conditioner condensate drains.

3.2.2.1 Insulation Material and Thickness

Insulation thickness for cold pipelines shall be determined using Table 2.

3.2.2.2 Factory or Field applied Jacket

Insulation shall be covered with a factory applied vapor retarder jacket/vapor barrier or field applied seal welded PVC jacket or greater than 3 ply laminated self-adhesive (minimum 2 mils adhesive, 3 mils embossed) vapor barrier/weatherproofing jacket - less than 0.0000 permeability, standard grade, sliver, white, black and embossed for use with Mineral Fiber, Cellular Glass, and Phenolic Foam Insulated Pipe. Insulation inside the building, to be protected with an aluminum jacket or greater than 3ply vapor barrier/weatherproofing self-adhesive (minimum 2 mils adhesive, 3 mils embossed) product, less than 0.0000 permeability, standard grade, Embossed Silver, White & Black, shall have the insulation and vapor retarder jacket installed as specified herein. The aluminum jacket or greater than 3ply vapor barrier/weatherproofing self-adhesive (minimum 2 mils adhesive, 3 mils embossed) product, less than 0.0000 permeability, standard grade, embossed silver, White & Black, shall be installed as specified for piping exposed to weather, except sealing of the laps of the aluminum jacket is not required. In high abuse areas such as janitor closets and traffic areas in equipment rooms, kitchens, and mechanical rooms, aluminum jackets or greater than 3ply vapor barrier/weatherproofing self-adhesive (minimum 2 mils adhesive, 3 mils embossed) product, less than 0.0000 permeability, standard grade, embossed silver, white & black, shall be provided for pipe insulation to the 6 ft level.

3.2.2.3 Installing Insulation for Straight Runs Hot and Cold Pipe

Apply insulation to the pipe with tight butt joints. Seal all butted joints and ends with joint sealant and seal with a vapor retarder coating, greater than 3 ply laminate jacket - less than 0.0000 perm adhesive tape or PVDC adhesive tape.

3.2.2.3.1 Longitudinal Laps of the Jacket Material

Overlap not less than 1-1/2 inches. Provide butt strips 3 inches wide for circumferential joints.

3.2.2.3.2 Laps and Butt Strips

Secure with adhesive and staple on 4 inch centers if not factory self-sealing. If staples are used, seal in accordance with paragraph STAPLES below. Note that staples are not required with cellular glass systems.

3.2.2.3.3 Factory Self-Sealing Lap Systems

May be used when the ambient temperature is between 40 and 120 degrees F during installation. Install the lap system in accordance with manufacturer's recommendations. Use a stapler only if specifically recommended by the manufacturer. Where gaps occur, replace the section or repair the gap by applying adhesive under the lap and then stapling.

3.2.2.3.4 Staples

Coat all staples, including those used to repair factory self-seal lap systems, with a vapor retarder coating or PVDC adhesive tape or greater than 3 ply laminate jacket - less than 0.0000 perm adhesive tape. Coat all seams, except those on factory self-seal systems, with vapor retarder coating or PVDC adhesive tape or greater than 3 ply laminate jacket - less than 0.0000 perm adhesive tape.

3.2.2.3.5 Breaks and Punctures in the Jacket Material

Patch by wrapping a strip of jacket material around the pipe and secure it with adhesive, staple, and coat with vapor retarder coating or PVDC adhesive tape or greater than 3 ply laminate jacket - less than 0.0000 perm adhesive tape. Extend the patch not less than 1-1/2 inches past the break.

3.2.2.3.6 Penetrations Such as Thermometers

Fill the voids in the insulation and seal with vapor retarder coating or PVDC adhesive tape or greater than 3 ply laminate jacket - less than 0.0000 perm adhesive tape.

3.2.2.3.7 Flexible Elastomeric Cellular Pipe Insulation

Install by slitting the tubular sections and applying them onto the piping or tubing. Alternately, whenever possible slide un-slit sections over the open ends of piping or tubing. Secure all seams and butt joints and seal with adhesive. When using self seal products only the butt joints shall be secured with adhesive. Push insulation on the pipe, never pulled. Stretching of insulation may result in open seams and joints. Clean cut all edges. Rough or jagged edges of the insulation are not be permitted. Use proper tools such as sharp knives. Do not stretch Grade 1, Type II sheet insulation around the pipe when used on pipe larger than 6 inches. On pipes larger than 12 inches, adhere sheet insulation directly to the pipe on the lower 1/3 of the pipe.

3.2.2.4 Insulation for Fittings and Accessories

a. Pipe insulation shall be tightly butted to the insulation of the fittings and accessories. The butted joints and ends shall be sealed with joint sealant and sealed with a vapor retarder coating or PVDC adhesive tape or greater than 3 ply laminate jacket - less than 0.0000 perm adhesive tape.

b. Precut or preformed insulation shall be placed around all fittings and accessories as modified herein: 5 for anchors; 10, 11, and 13 for fittings; 14 for valves; and 17 for flanges and unions. Insulation shall be the same insulation as the pipe insulation, including same density, thickness, and thermal conductivity. Where precut/preformed is unavailable, rigid preformed pipe insulation sections may be segmented into the shape required. Insulation of the same thickness and conductivity as the adjoining pipe insulation shall be used. If nesting size insulation is used, the insulation shall be overlapped 2 inches or one pipe diameter. Elbows insulated using segments shall conform to MICA Tables 12.20 "Mitered Insulation Elbow'. Submit a booklet detailing each insulating system for each pipe, duct, or equipment insulating system, after approval of materials and prior to applying insulation.

c. Upon completion of insulation installation on flanges, unions, valves, anchors, fittings and accessories, terminations, seams, joints and insulation not protected by factory vapor retarder jackets or PVC fitting covers shall be protected with PVDC or greater than 3 ply laminate jacket - less than 0.0000 perm adhesive tape or two coats of vapor retarder coating with a minimum total thickness of 1/16 inch, applied with glass tape embedded between coats. Tape seams shall overlap 1 inch. The coating shall extend out onto the adjoining pipe insulation 2 inches. Fabricated insulation with a factory vapor retarder jacket shall be protected with either greater than 3 ply laminate jacket - less than 0.0000 perm adhesive tape, standard grade, silver, white, black and embossed or PVDC adhesive tape or two coats of vapor retarder coating with a minimum thickness of 1/16 inch and with a 2 inch wide glass tape embedded between coats. Where fitting insulation butts to pipe insulation, the joints shall be sealed with a vapor retarder coating and a 4 inch wide ASJ tape which matches the jacket of the pipe insulation.

d. Anchors attached directly to the pipe shall be insulated for a sufficient distance to prevent condensation but not less than 6 inches from the insulation surface.

e. Insulation shall be marked showing the location of unions, strainers, and check valves.

3.2.2.5 Optional PVC Fitting Covers

At the option of the Contractor, premolded, one or two piece PVC fitting covers may be used in lieu of the vapor retarder and embedded glass tape. Factory precut or premolded insulation segments shall be used under the fitting covers for elbows. Insulation segments shall be the same insulation as the pipe insulation including same density, thickness, and thermal conductivity. The covers shall be secured by PVC vapor retarder tape, adhesive, seal welding or with tacks made for securing PVC covers. Seams in the cover, and tacks and laps to adjoining pipe insulation jacket, shall be sealed with vapor retarder tape to ensure that the assembly has a continuous vapor seal.

3.2.3 Piping Exposed to Weather

Piping exposed to weather shall be insulated and jacketed as specified for the applicable service inside the building. After this procedure, a laminated self-adhesive (minimum 2 mils adhesive, 3 mils embossed) vapor barrier/weatherproofing jacket - less than 0.0000 permeability (greater than 3 ply, standard grade, silver, white, black and embossed aluminum jacket or PVC jacket shall be applied. PVC jacketing requires no factory-applied jacket beneath it, however an all service jacket shall be applied if factory applied jacketing is not furnished. Flexible elastomeric cellular insulation exposed to weather shall be treated in accordance with paragraph INSTALLATION OF FLEXIBLE ELASTOMERIC CELLULAR INSULATION in PART 3.

3.2.3.1 Aluminum Jacket

The jacket for hot piping may be factory applied. The jacket shall overlap not less than 2 inches at longitudinal and circumferential joints and shall be secured with bands at not more than 12 inch centers. Longitudinal joints shall be overlapped down to shed water and located at

4 or 8 o'clock positions. Joints on piping 60 degrees F and below shall be sealed with metal jacketing/flashing sealant while overlapping to prevent moisture penetration. Where jacketing on piping 60 degrees F and below abuts an un-insulated surface, joints shall be caulked to prevent moisture penetration. Joints on piping above 60 degrees F shall be sealed with a moisture retarder.

3.2.3.2 Insulation for Fittings

Flanges, unions, valves, fittings, and accessories shall be insulated and finished as specified for the applicable service. Two coats of breather emulsion type weatherproof mastic (impermeable to water, permeable to air) recommended by the insulation manufacturer shall be applied with glass tape embedded between coats. Tape overlaps shall be not less than 1 inch and the adjoining aluminum jacket not less than 2 inches. Factory preformed aluminum jackets may be used in lieu of the above. Molded PVC fitting covers shall be provided when PVC jackets are used for straight runs of pipe. PVC fitting covers shall have adhesive welded joints and shall be weatherproof laminated self-adhesive (minimum 2 mils adhesive, 3 mils embossed) vapor barrier/weatherproofing jacket - less than 0.0000 permeability, (greater than 3 ply, standard grade, silver, white, black and embossed, and UV resistant.

3.2.3.3 PVC Jacket

PVC jacket shall be ultraviolet resistant and adhesive welded weather tight with manufacturer's recommended adhesive. Installation shall include provision for thermal expansion.

3.3 DUCT INSULATION SYSTEMS INSTALLATION

Corner angles shall be installed on external corners of insulation on ductwork in exposed finished spaces before covering with jacket. Air conditioned spaces shall be defined as those spaces directly supplied with cooled conditioned air (or provided with a cooling device such as a fan-coil unit) and heated conditioned air (or provided with a heating device such as a unit heater, radiator or convector).

3.3.1 Duct Insulation Minimum Thickness

Duct insulation minimum thickness in accordance with Table 4.

Table 4 - Minimum Duct Insulation (inches)	
Cold Air Ducts	2.0
Relief & Exhaust Ducts	1.5
Fresh Air Intake Ducts	1.5
Warm Air Ducts	2.0
Relief & Exhaust Ducts	1.5
Fresh Air Intake Ducts	1.5

3.3.2 Insulation and Vapor Retarder/Vapor Barrier for Cold Air Duct

Insulation and vapor retarder/vapor barrier shall be provided for the

following cold air ducts and associated equipment.

a. Supply ducts.

b. Return air ducts.

c. Relief & exhaust ducts.

d. Flexible run-outs (field-insulated).

e. Plenums.

f. Duct-mounted coil casings.

g. Coil headers and return bends.

h. Coil casings.

i. Fresh air intake ducts.

j. Filter boxes.

k. Mixing boxes (field-insulated).

l. Supply fans (field-insulated).

m. Site-erected air conditioner casings.

n. Ducts exposed to weather.

o. Combustion air intake ducts.

Insulation for rectangular ducts shall be flexible type where concealed, minimum density 3/4 pcf, and rigid type where exposed, minimum density 3 pcf. Insulation for both concealed or exposed round/oval ducts shall be flexible type, minimum density 3/4 pcf or a semi rigid board, minimum density 3 pcf, formed or fabricated to a tight fit, edges beveled and joints tightly butted and staggered. Insulation for all exposed ducts shall be provided with either a white, paint-able, factory-applied Type I jacket or a field applied vapor retarder/vapor barrier jacket coating finish as specified, the total field applied dry film thickness shall be approximately 1/16 inch. Insulation on all concealed duct shall be provided with a factory-applied Type I or II vapor retarder/vapor barrier jacket. Duct insulation shall be continuous through sleeves and prepared openings except firewall penetrations. Duct insulation terminating at fire dampers, shall be continuous over the damper collar and retaining angle of fire dampers, which are exposed to unconditioned air and which may be prone to condensate formation. Duct insulation and vapor retarder/vapor barrier shall cover the collar, neck, and any un-insulated surfaces of diffusers, registers and grills. Vapor retarder/vapor barrier materials shall be applied to form a complete unbroken vapor seal over the insulation. Sheet Metal Duct shall be sealed in accordance with Section 23 00 00 AIR SUPPLY, DISTRIBUTION, VENTILATION, AND EXHAUST SYSTEM.

3.3.2.1 Installation on Concealed Duct

a. For rectangular, oval or round ducts, flexible insulation shall be attached by applying adhesive around the entire perimeter of the duct in 6 inch wide strips on 12 inch centers.

b. For rectangular and oval ducts, 24 inches and larger insulation shall be additionally secured to bottom of ducts by the use of mechanical fasteners. Fasteners shall be spaced on 16 inch centers and not more than 16 inches from duct corners.

c. For rectangular, oval and round ducts, mechanical fasteners shall be provided on sides of duct risers for all duct sizes. Fasteners shall be spaced on 16 inch centers and not more than 16 inches from duct corners.

d. Insulation shall be impaled on the mechanical fasteners (self stick pins) where used and shall be pressed thoroughly into the adhesive. Care shall be taken to ensure vapor retarder/vapor barrier jacket joints overlap 2 inches. The insulation shall not be compressed to a thickness less than that specified. Insulation shall be carried over standing seams and trapeze-type duct hangers.

e. Where mechanical fasteners are used, self-locking washers shall be installed and the pin trimmed and bent over.

f. Jacket overlaps shall be secured with staples and tape as necessary to ensure a secure seal. Staples, tape and seams shall be coated with a brush coat of vapor retarder coating or PVDC adhesive tape or greater than 3 ply laminate (minimum 2 mils adhesive, 3 mils embossed) - less than 0.0000 perm adhesive tape.

g. Breaks in the jacket material shall be covered with patches of the same material as the vapor retarder jacket. The patches shall extend not less than 2 inches beyond the break or penetration in all directions and shall be secured with tape and staples. Staples and tape joints shall be sealed with a brush coat of vapor retarder coating or PVDC adhesive tape or greater than 3 ply laminate (minimum 2 mils adhesive, 3 mils embossed) - less than 0.0000 perm adhesive tape.

h. At jacket penetrations such as hangers, thermometers, and damper operating rods, voids in the insulation shall be filled and the penetration sealed with a brush coat of vapor retarder coating or PVDC adhesive tape greater than 3 ply laminate (minimum 2 mils adhesive, 3 mils embossed) - less than 0.0000 perm adhesive tape.

i. Insulation terminations and pin punctures shall be sealed and flashed with a reinforced vapor retarder coating finish or tape with a brush coat of vapor retarder coating.. The coating shall overlap the adjoining insulation and un-insulated surface 2 inches. Pin puncture coatings shall extend 2 inches from the puncture in all directions.

j. Where insulation standoff brackets occur, insulation shall be extended under the bracket and the jacket terminated at the bracket.

3.3.2.2 Installation on Exposed Duct Work

a. For rectangular ducts, rigid insulation shall be secured to the duct by mechanical fasteners on all four sides of the duct, spaced not more than 12 inches apart and not more than 3 inches from the edges of the insulation joints. A minimum of two rows of fasteners shall be provided for each side of duct 12 inches and larger. One row shall be provided for each side of duct less than 12 inches. Mechanical

fasteners shall be as corrosion resistant as G60 coated galvanized steel, and shall indefinitely sustain a 50 lb tensile dead load test perpendicular to the duct wall.

b. Form duct insulation with minimum jacket seams. Fasten each piece of rigid insulation to the duct using mechanical fasteners. When the height of projections is less than the insulation thickness, insulation shall be brought up to standing seams, reinforcing, and other vertical projections and shall not be carried over. Vapor retarder/barrier jacket shall be continuous across seams, reinforcing, and projections. When height of projections is greater than the insulation thickness, insulation and jacket shall be carried over. Apply insulation with joints tightly butted. Neatly bevel insulation around name plates and access plates and doors.

c. Impale insulation on the fasteners; self-locking washers shall be installed and the pin trimmed and bent over.

d. Seal joints in the insulation jacket with a 4 inch wide strip of tape. Seal taped seams with a brush coat of vapor retarder coating.

e. Breaks and ribs or standing seam penetrations in the jacket material shall be covered with a patch of the same material as the jacket. Patches shall extend not less than 2 inches beyond the break or penetration and shall be secured with tape and stapled. Staples and joints shall be sealed with a brush coat of vapor retarder coating.

f. At jacket penetrations such as hangers, thermometers, and damper operating rods, the voids in the insulation shall be filled and the penetrations sealed with a flashing sealant.

g. Insulation terminations and pin punctures shall be sealed and flashed with a reinforced vapor retarder coating finish. The coating shall overlap the adjoining insulation and un-insulated surface 2 inches. Pin puncture coatings shall extend 2 inches from the puncture in all directions.

h. Oval and round ducts, flexible type, shall be insulated with factory Type I jacket insulation with minimum density of 3/4 pcf, attached as in accordance with MICA standards.

3.3.3 Insulation for Warm Air Duct

Insulation and vapor barrier shall be provided for the following warm air ducts and associated equipment:.

a. Supply ducts.

b. Return air ducts.

c. Relief & exhaust air ducts

d. Flexible run-outs (field insulated).

e. Plenums.

f. Duct-mounted coil casings.

g. Coil-headers and return bends.

h. Coil casings.

i. Fresh air intake ducts.

j. Filter boxes.

k. Mixing boxes.

l. Supply fans.

m. Site-erected air conditioner casings.

Insulation for rectangular ducts shall be flexible type where concealed, and rigid type where exposed. Insulation on exposed ducts shall be provided with a white, paint-able, factory-applied Type II jacket, or finished with adhesive finish. Flexible type insulation shall be used for round ducts, with a factory-applied Type II jacket. Insulation on concealed duct shall be provided with a factory-applied Type II jacket. Adhesive finish where indicated to be used shall be accomplished by applying two coats of adhesive with a layer of glass cloth embedded between the coats. The total dry film thickness shall be approximately 1/16 inch. Duct insulation shall be continuous through sleeves and prepared openings. Duct insulation shall terminate at fire dampers and flexible connections.

3.3.3.1 Installation on Concealed Duct

a. For rectangular, oval and round ducts, insulation shall be attached by applying adhesive around the entire perimeter of the duct in 6 inch wide strips on 12 inch centers.

b. For rectangular and oval ducts 24 inches and larger, insulation shall be secured to the bottom of ducts by the use of mechanical fasteners. Fasteners shall be spaced on 18 inch centers and not more than 18 inches from duct corner.

c. For rectangular, oval and round ducts, mechanical fasteners shall be provided on sides of duct risers for all duct sizes. Fasteners shall be spaced on 18 inch centers and not more than 18 inches from duct corners.

d. The insulation shall be impaled on the mechanical fasteners where used. The insulation shall not be compressed to a thickness less than that specified. Insulation shall be carried over standing seams and trapeze-type hangers.

e. Self-locking washers shall be installed where mechanical fasteners are used and the pin trimmed and bent over.

f. Insulation jacket shall overlap not less than 2 inches at joints and the lap shall be secured and stapled on 4 inch centers.

3.3.3.2 Installation on Exposed Duct

a. For rectangular ducts, the rigid insulation shall be secured to the duct by the use of mechanical fasteners on all four sides of the duct, spaced not more than 16 inches apart and not more than 6 inches from the edges of the insulation joints. A minimum of two rows of

fasteners shall be provided for each side of duct 12 inches and larger and a minimum of one row for each side of duct less than 12 inches.

b. Duct insulation with factory-applied jacket shall be formed with minimum jacket seams, and each piece of rigid insulation shall be fastened to the duct using mechanical fasteners. When the height of projection is less than the insulation thickness, insulation shall be brought up to standing seams, reinforcing, and other vertical projections and shall not be carried over the projection. Jacket shall be continuous across seams, reinforcing, and projections. Where the height of projections is greater than the insulation thickness, insulation and jacket shall be carried over the projection.

c. Insulation shall be impaled on the fasteners; self-locking washers shall be installed and pin trimmed and bent over.

d. Joints on jacketed insulation shall be sealed with a 4 inch wide strip of tape and brushed with vapor retarder coating.

e. Breaks and penetrations in the jacket material shall be covered with a patch of the same material as the jacket. Patches shall extend not less than 2 inches beyond the break or penetration and shall be secured with adhesive and stapled.

f. Insulation terminations and pin punctures shall be sealed with tape and brushed with vapor retarder coating.

g. Oval and round ducts, flexible type, shall be insulated with factory Type I jacket insulation, minimum density of 3/4 pcf attached by staples spaced not more than 16 inches and not more than 6 inches from the degrees of joints. Joints shall be sealed in accordance with item "d." above.

3.3.4 Ducts Handling Air for Dual Purpose

For air handling ducts for dual purpose below and above 60 degrees F, ducts shall be insulated as specified for cold air duct.

3.3.5 Duct Test Holes

After duct systems have been tested, adjusted, and balanced, breaks in the insulation and jacket shall be repaired in accordance with the applicable section of this specification for the type of duct insulation to be repaired.

3.4 EQUIPMENT INSULATION SYSTEMS INSTALLATION

3.4.1 General

Removable insulation sections shall be provided to cover parts of equipment that must be opened periodically for maintenance including vessel covers, fasteners, flanges and accessories. Equipment insulation shall be omitted on the following:

a. Hand-holes.

b. Cleanouts.

c. ASME stamps.

d. Manufacturer's nameplates.

e. Duct Test/Balance Test Holes.

3.4.2 Insulation for Cold Equipment

Cold equipment below 60 degrees F: Insulation shall be furnished on equipment handling media below 60 degrees F including the following:

a. Pumps.

b. Refrigeration equipment parts that are not factory insulated.

c. Drip pans under chilled equipment.

d. Air handling equipment parts that are not factory insulated.

e. Expansion and air separation tanks.

3.4.2.1 Insulation Type

Insulation shall be suitable for the temperature encountered. Material and thicknesses shall be as shown in Table 5:

TABLE 5		
Insulation Thickness for Cold Equipment (inches)		
Equipment handling media at indicated temperature		
	Material	Thickness (inches)
35 to 60 degrees F		
	Cellular Glass	1.5
1 to 34 degrees F		
	Cellular Glass	3
Minus 30 to 0 degrees F		
	Cellular Glass	3.5

3.4.2.2 Other Equipment

a. Insulation shall be formed or fabricated to fit the equipment. To ensure a tight fit on round equipment, edges shall be beveled and joints shall be tightly butted and staggered.

b. Insulation shall be secured in place with bands or wires at intervals as recommended by the manufacturer but not more than 12 inch centers except flexible elastomeric cellular which shall be adhered with contact adhesive. Insulation corners shall be protected under wires and bands with suitable corner angles.

c. Cellular glass shall be installed in accordance with manufacturer's instructions. Joints and ends shall be sealed with joint sealant, and sealed with a vapor retarder coating.

d. Insulation on heads of heat exchangers shall be removable. Removable section joints shall be fabricated using a male-female shiplap type joint. The entire surface of the removable section shall be finished by applying two coats of vapor retarder coating with a layer of glass cloth embedded between the coats. The total dry thickness of the finish shall be 1/16 inch.

e. Exposed insulation corners shall be protected with corner angles.

f. Insulation on equipment with ribs shall be applied over 6 by 6 inches by 12 gauge welded wire fabric which has been cinched in place, or if approved by the Contracting Officer, spot welded to the equipment over the ribs. Insulation shall be secured to the fabric with J-hooks and 2 by 2 inches washers or shall be securely banded or wired in place on 12 inch centers.

3.4.2.3 Vapor Retarder/Vapor Barrier

Upon completion of installation of insulation, penetrations shall be caulked. Two coats of vapor retarder coating or vapor barrier jacket shall be applied over insulation, including removable sections, with a layer of open mesh synthetic fabric embedded between the coats. The total dry thickness of the finish shall be 1/16 inch. Flashing sealant or vapor barrier tape shall be applied to parting line between equipment and removable section insulation.

3.4.3 Insulation for Hot Equipment

Insulation shall be furnished on equipment handling media above 60 degrees F including the following:

a. Water heaters.

b. Pumps handling media above 130 degrees F.

3.4.3.1 Insulation

Insulation shall be suitable for the temperature encountered. Shell and tube-type heat exchangers shall be insulated for the temperature of the shell medium.

Insulation thickness for hot equipment shall be determined using Table 6:

TABLE 6		
Insulation Thickness for Hot Equipment (inches)		
Equipment handling steam or media at indicated pressure or temperature limit		
	Material	Thickness (inches)
15 psig or 250 degrees F		
	Rigid Mineral Fiber	2
	Flexible Mineral Fiber	2
	Cellular Glass	3

3.4.3.2 Insulation of Pumps

Insulate pumps by forming a box around the pump housing. The box shall be constructed by forming the bottom and sides using joints that do not leave raw ends of insulation exposed. Bottom and sides shall be banded to form a rigid housing that does not rest on the pump. Joints between top cover and sides shall fit tightly. The top cover shall have a joint forming a female shiplap joint on the side pieces and a male joint on the top cover, making the top cover removable. Two coats of Class I adhesive shall be

applied over insulation, including removable sections, with a layer of glass cloth embedded between the coats. A parting line shall be provided between the box and the removable sections allowing the removable sections to be removed without disturbing the insulation coating. The total dry thickness of the finish shall be 1/16 inch. Caulking shall be applied to parting line of the removable sections and penetrations.

3.4.3.3 Other Equipment

a. Insulation shall be formed or fabricated to fit the equipment. To ensure a tight fit on round equipment, edges shall be beveled and joints shall be tightly butted and staggered.

b. Insulation shall be secured in place with bands or wires at intervals as recommended by the manufacturer but not greater than 12 inch centers except flexible elastomeric cellular which shall be adhered. Insulation corners shall be protected under wires and bands with suitable corner angles.

c. On high vibration equipment, cellular glass insulation shall be set in a coating of bedding compound as recommended by the manufacturer, and joints shall be sealed with bedding compound. Mineral fiber joints shall be filled with finishing cement.

d. Insulation on heads of heat exchangers shall be removable. The removable section joint shall be fabricated using a male-female shiplap type joint. Entire surface of the removable section shall be finished as specified.

e. Exposed insulation corners shall be protected with corner angles.

f. On equipment with ribs, such as boiler flue gas connection, draft fans, and fly ash or soot collectors, insulation shall be applied over 6 by 6 inch by 12 gauge welded wire fabric which has been cinched in place, or if approved by the Contracting Officer, spot welded to the equipment over the ribs. Insulation shall be secured to the fabric with J-hooks and 2 by 2 inch washers or shall be securely banded or wired in place on 12 inch (maximum) centers.

g. On equipment handling media above 600 degrees F, insulation shall be applied in two or more layers with joints staggered.

h. Upon completion of installation of insulation, penetrations shall be caulked. Two coats of adhesive shall be applied over insulation, including removable sections, with a layer of glass cloth embedded between the coats. The total dry thickness of the finish shall be 1/16 inch. Caulking shall be applied to parting line between equipment and removable section insulation.

3.4.4 Equipment Handling Dual Temperature Media

Below and above 60 degrees F: equipment handling dual temperature media shall be insulated as specified for cold equipment.

-- End of Section --

THIS PAGE HAS BEEN INTENTIONALLY LEFT BLANK

SECTION 23 09 00.00 22

INSTRUMENTATION AND CONTROL FOR HVAC
11/19

PART 1 GENERAL

1.1 SUMMARY

Provide a complete Direct Digital Control (DDC) system, except for the Front End which is existing and new system integration being performed by the Government, suitable for the control of the heating, ventilating and air conditioning (HVAC) and other building-level systems as indicated and shown and in accordance with Section 23 09 13.00 22 INSTRUMENTATION AND CONTROL DEVICES FOR HVAC, Section 23 09 23.02 22 BACNET DIRECT DIGITAL CONTROL FOR HVAC AND OTHER BUILDING CONTROL SYSTEMS for BACnet or Niagara BACnet systems, and other referenced Sections.

1.1.1 System Requirements

Provide systems meeting the requirements this Section and other Sections referenced by this Section, and which have the following characteristics:

a. The system implements the control sequences of operation shown in the Contract Drawings using DDC hardware to control mechanical and electrical equipment

b. The system meet the requirements of this specification as a stand-alone system and does not require connection to any other system.

c. Control sequences reside in DDC hardware in the building. The building control network is not dependent upon connection to a Utility Monitoring and Control System (UMCS) Front End or to any other system for performance of control sequences. To the greatest extent practical, the hardware performs control sequences without reliance on the building network.

d. The hardware is installed such that individual control equipment can be replaced by similar control equipment from other equipment manufacturers with no loss of system functionality.

e. All necessary documentation, configuration information, programming tools, programs, drivers, and other software are licensed to and otherwise remain with the Government such that the Government or their agents are able to perform repair, replacement, upgrades, and expansions of the system without subsequent or future dependence on the Contractor, Vendor or Manufacturer.

f. Sufficient documentation and data, including rights to documentation and data, are provided such that the Government or their agents can execute work to perform repair, replacement, upgrades, and expansions of the system without subsequent or future dependence on the Contractor, Vendor or Manufacturer.

g. Hardware is installed and configured such that the Government or their agents are able to perform repair, replacement, and upgrades of individual hardware without further interaction with the Contractor, Vendor or Manufacturer.

h. All Niagara Framework components have an unrestricted interoperability license with a Niagara Compatibility Statement (NiCS) following the Tridium Open NiCS Specification and have a value of "ALL" for "Station Compatibility In", "Station Compatibility Out", "Tool Compatibility In" and "Tool Compatibility Out". Note that this will result in the following entries in the license file:
    accept.station.in="*"
    accept.station.out="*"
    accept.wb.in="*"
    accept.wb.out="*"

1.1.2 End to End Accuracy

Select products, install and configure the system such that the maximum error of a measured value as read from the DDC Hardware over the network is less than the maximum allowable error specified for the sensor or instrumentation.

1.1.3 Verification of Dimensions

After becoming familiar with all details of the work, verify all dimensions in the field, and advise the Contracting Officer of any discrepancy before performing any work.

1.1.4 Drawings

The Government will not indicate all offsets, fittings, and accessories that may be required on the drawings. Carefully investigate the mechanical, electrical, and finish conditions that could affect the work to be performed, arrange such work accordingly, and provide all work necessary to meet such conditions.

1.2 RELATED SECTIONS

Related work specified elsewhere:

a. Section 23 09 23.02 22 BACNET DIRECT DIGITAL CONTROL FOR HVAC AND OTHER BUILDING CONTROL SYSTEMS for BACnet systems with or without Niagara Framework.

b. Section 23 09 13.00 22 INSTRUMENTATION AND CONTROL DEVICES FOR HVAC

c. Section 25 05 11 CYBERSECURITY FOR FACILITY-RELATED CONTROL SYSTEMS

d. Section 01 91 00.15 22 TOTAL BUILDING COMMISSIONING

1.3 REFERENCES

The publications listed below form a part of this specification to the extent referenced. The publications are referred to within the text by the basic designation only.

AMERICAN SOCIETY OF HEATING, REFRIGERATING AND AIR-CONDITIONING ENGINEERS (ASHRAE)

ASHRAE 135	(2016) BACnet—A Data Communication Protocol for Building Automation and Control Networks

ASHRAE FUN IP (2017) Fundamentals Handbook, I-P Edition

NATIONAL ELECTRICAL MANUFACTURERS ASSOCIATION (NEMA)

NEMA 250 (2018) Enclosures for Electrical Equipment (1000 Volts Maximum)

NATIONAL FIRE PROTECTION ASSOCIATION (NFPA)

NFPA 70 (2017; ERTA 1-2 2017; TIA 17-1; TIA 17-2; TIA 17-3; TIA 17-4; TIA 17-5; TIA 17-6; TIA 17-7; TIA 17-8; TIA 17-9; TIA 17-10; TIA 17-11; TIA 17-12; TIA 17-13; TIA 17-14; TIA 17-15; TIA 17-16; TIA 17-17) National Electrical Code

NFPA 90A (2018) Standard for the Installation of Air Conditioning and Ventilating Systems

TRIDIUM, INC (TRIDIUM)

Niagara Framework (2012) NiagaraAX User's Guide

Tridium Open NiCS (2005) Understanding the NiagaraAX Compatibility Statement (NiCS)

UNDERWRITERS LABORATORIES (UL)

UL 5085-3 (2006; Reprint Nov 20121) Low Voltage Transformers - Part 3: Class 2 and Class 3 Transformers

UL 508A (2018; Reprint Jul 2018) UL Standard for Safety Industrial Control Panels

1.4 DEFINITIONS

The following list of definitions includes terms used in Sections referenced by this Section and are included here for completeness.The definitions contained in this Section may disagree with how terms are defined or used in other documents, including documents referenced by this Section. The definitions included here are the authoritative definitions for this Section and all Sections referenced by this Section.

After each term the protocol related to that term is included in parenthesis.

1.4.1 Alarm Generation (All protocols)

Alarm Generation is the monitoring of a value, comparison of the value to alarm conditions and the creation of an alarm when the conditions set for the alarm are met. Note that this does NOT include delivery of the alarm to the final destination (such as a user interface).

1.4.2 Building Automation and Control Network (BACnet) (BACnet)

The term BACnet is used in two ways. First meaning the BACnet Protocol Standard - the communication requirements as defined by ASHRAE 135

including all annexes and addenda. The second to refer to the overall technology related to the ASHRAE 135 protocol.

1.4.3 BACnet Advanced Application Controller (B-AAC) (BACnet)

A hardware device BTL Listed as a B-AAC, which is required to support BACnet Interoperability Building Blocks (BIBBs) for scheduling and alarming, but is not required to support as many BIBBs as a B-BC.

1.4.4 BACnet Application Specific Controller (B-ASC) (BACnet)

A hardware device BTL Listed as a B-ASC, with fewer BIBB requirements than a B-AAC. It is intended for use in a specific application.

1.4.5 BACnet Building Controller (B-BC) (BACnet)

A hardware device BTL Listed as a B-BC. A general-purpose, field-programmable device capable of carrying out a variety of building automation and control tasks including control and monitoring via direct digital control (DDC) of specific systems and data storage for trend information, time schedules, and alarm data. Like the other BTL Listed controller types (B-AAC, B-ASC etc.) a B-BC device is required to support the server ("B") side of the ReadProperty and WriteProperty services, but unlike the other controller types it is also required to support the client ("A") side of these services. Communication between controllers requires that one of them support the client side and the other support the server side, so a B-BC is often used when communication between controllers is needed.

1.4.6 BACnet Broadcast Management Device (BBMD) (BACnet)

A communications device, typically combined with a BACnet router. A BBMD forwards BACnet broadcast messages to BACnet/IP devices and other BBMDs connected to the same BACnet/IP network. Each IP subnet that is part of a BACnet/IP network must have at least one BBMD. Note there are additional restrictions when multiple BBMDs share an IP subnet.

1.4.7 BACnet/IP (BACnet)

An extension of BACnet, Annex J, defines the use of a reserved UDP socket to transmit BACnet messages over IP networks. A BACnet/IP network is a collection of one or more IP subnets that share the same BACnet network number. See also paragraph BACNET BROADCAST MANAGEMENT DEVICE.

1.4.8 BACnet Internetwork (BACnet)

Two or more BACnet networks, connected with BACnet routers. In a BACnet Internetwork, there exists only one message path between devices.

1.4.9 BACnet Interoperability Building Blocks (BIBBs) (BACnet)

A BIBB is a collection of one or more ASHRAE 135 Services intended to define a higher level of interoperability. BIBBs are combined to build the BACnet functional requirements for a device in a specification. Some BIBBs define additional requirements (beyond requiring support for specific services) in order to achieve a level of interoperability. For example, the BIBB DS-V-A (Data Sharing-View-A), which would typically be used by a front-end, not only requires the client to support the ReadProperty Service, but also provides a list of data types (Object / Properties)

which the client must be able to interpret and display for the user.

In the BIBB shorthand notation, -A is the client side and -B is the server side.

The following is a list of some BIBBs used by this or referenced Sections:	
DS-COV-A	Data Sharing-Change of Value (A side)
DS-COV-B	Data Sharing-Change of Value (B side)
NM-RC-B	Network Management-Router Configuration (B side)
DS-RP-A	Data Sharing-Read Property (A side)
DS-RP-B	Data Sharing-Read Property (B side)
DS-RPM-A	Data Sharing-Read Property Multiple (A Side)
DS-RPM-B	Data Sharing-Read Property Multiple (B Side)
DS-WP-A	Data Sharing-Write Property (A Side)
DM-TS-B	Device Management-Time Synchronization (B Side)
DM-UTC-B	Device Management-UTC Time Synchronization (B Side)
DS-WP-B	Data Sharing-Write Property (B side)
SCHED-E-B	Scheduling-External (B side)
DM-OCD-B	Device Management-Object Creation and Deletion (B side)
AE-N-I-B	Alarm and Event-Notification Internal (B Side)
AE-N-E-B	Alarm and Event-Notification External (B Side)
T-VMT-I-B	Trending-Viewing and Modifying Trends Internal (B Side)
T-VMT-E-B	Trending-Viewing and Modifying Trends External (B Side)

1.4.10 BACnet Network (BACnet)

In BACnet, a portion of the control Internetwork consisting of one or more segments connected by repeaters. Networks are separated by routers.

1.4.11 BACnet Operator Display (B-OD) (BACnet)

A basic operator interface with limited capabilities relative to a B-OWS. It is not intended to perform direct digital control. A B-OD profile could be used for LCD devices, displays affixed to BACnet devices, handheld terminals or other very simple user interfaces.

1.4.12 BACnet Segment (BACnet)

One or more physical segments interconnected by repeaters (ASHRAE 135).

1.4.13 BACnet Smart Actuator (B-SA) (BACnet)

A simple actuator device with limited resources intended for specific applications.

1.4.14 BACnet Smart Sensor (B-SS) (BACnet)

A simple sensing device with limited resources.

1.4.15 BACnet Testing Laboratories (BTL) (BACnet)

Established by BACnet International to support compliance testing and interoperability testing activities and consists of BTL Manager and the BTL Working Group (BTL-WG). BTL also publishes Implementation Guidelines.

1.4.16 BACnet Testing Laboratories (BTL) Listed (BACnet)

A device that has been listed by BACnet Testing Laboratory. Devices may be certified to a specific device profile, in which case the listing indicates that the device supports the required capabilities for that profile, or may be listed as "other".

1.4.17 Binary (All protocols)

A two-state system where an "ON" condition is represented by a high signal level and an "OFF" condition is represented by a low signal level. 'Digital' is sometimes used interchangeably with 'binary'.

1.4.18 Broadcast (BACnet)

Unlike most messages, which are intended for a specific recipient device, a broadcast message is intended for all devices on the network.

1.4.19 Building Control Network (BCN) (All protocols)

The network connecting all DDC Hardware within a building (or specific group of buildings). In general, networks within the building, all controllers and equipment will be BACnet MS/TP, unless noted otherwise.

1.4.20 Building Point of Connection (BPOC) (All protocols)

A FPOC for a Building Control System. (This term is being phased out of use in preference for FPOC but is still used in some specifications and criteria. When it was used, it typically referred to a piece of control hardware. The current FPOC definition typically refers instead to IT hardware.)

1.4.21 Commandable (All protocols)

See Overridable.

1.4.22 Commandable Objects (BACnet)

Commandable Objects have a Commandable Property, Priority_Array, and Relinquish_Default Property as defined in ASHRAE 135, Clause 19.2, Command Prioritization.

1.4.23 Configurable (All protocols)

A property, setting, or value is configurable if it can be changed via hardware settings on the device, via the use of engineering software or over the control network from the front end, and is retained through (after) loss of power.

In a Niagara Framework BACnet system, a property, setting, or value is configurable if it can be changed via one or more of:

1) via BACnet services (including proprietary BACnet services)
2) via hardware settings on the device
3) via the Niagara Framework

Note this is more stringent than the ASHRAE 135 definition.

1.4.24 Control Logic Diagram (All protocols)

A graphical representation of control logic for multiple processes that make up a system.

1.4.25 Device (BACnet)

A Digital Controller that contains a BACnet Device Object and uses BACnet to communicate with other devices.

1.4.26 Device Object (BACnet)

Every BACnet device requires one Device Object, whose properties represent the network visible properties of that device. Every Device Object requires a unique Object Identifier number on the BACnet Internetwork. This number is often referred to as the device instance or device ID.

1.4.27 Device Profile (BACnet)

A collection of BIBBs determining minimum BACnet capabilities of a device, defined in ASHRAE 135. Standard device profiles include BACnet Advanced Workstations (B-AWS), BACnet Building Controllers (B-BC), BACnet Advanced Application Controllers (B-AAC), BACnet Application Specific Controllers (B-ASC), BACnet Smart Actuator (B-SA), and BACnet Smart Sensor (B-SS).

1.4.28 Digital Controller (All protocols)

An electronic controller, usually with internal programming logic and digital and analog input/output capability, which performs control functions.

1.4.29 Direct Digital Control (DDC) (All protocols)

Digital controllers performing control logic. Usually the controller directly senses physical values, makes control decisions with internal programs, and outputs control signals to directly operate switches, valves, dampers, and motor controllers.

1.4.30 EMCS (All Protocals)

Term has been replaced by UMCS. See Paragraph "UMCS (All protocols".)

1.4.31 EMCS Network (All Protocals)

Term has been replaced by UMCS. See Paragraph "UMCS Network (All protocols)".

1.4.32 Field Controllers

Field controllers typically have a greater capability for input/output and customization, do not have integral actuators, are mounted in an enclosure not on the equipment and are used for equipment such as VAV air handlers.

1.4.33 Field Point of Connection (FPOC) (All protocols)

The FPOC is the point of connection between the UMCS IP Network and the field control network (either an IP network, a non-IP network, or a combination of both). The hardware at this location which provides the connection is generally an IT device such as a switch, IP router, or firewall.

In general, the term "FPOC Location" means the place where this connection occurs, and "FPOC Hardware" means the device that provides the connection. Sometimes the term "FPOC" is used to mean either and its actual meaning (i.e. location or hardware) is determined by the context in which it is used.

1.4.34 Fox Protocol (Niagara Framework)

The protocol used for communication between components in the Niagara Framework. By default, Fox uses TCP port 1911.

1.4.35 Gateway (All protocols)

A device that translates from one protocol application data format to another. Devices that change only the transport mechanism of the protocol - "translating" from TP/FT-10 to Ethernet/IP or from BACnet MS/TP to BACnet over IP for example - are not gateways as the underlying data format does not change. Gateways are also called Communications Bridges or Protocol Translators.

A Niagara Framework Supervisory Gateway is one type of Gateway.

1.4.36 Global ID

An identification number assigned to each Supervisory Building Controller. The Global ID includes assigned MSTP Trunk Instance Numbers and a range of BACnet Instance Numbers to be used for the Field Controllers. The Global ID is assigned by Public Works.

1.4.37 IEEE 802.3 Ethernet (All protocols)

A family of local-area-network technologies providing high-speed networking features over various media, typically Cat 5, 5e or Cat 6 twisted pair copper or fiber optic cable.

1.4.38 Internet Protocol (IP, TCP/IP, UDP/IP) (All protocols)

A communication method, the most common use is the World Wide Web. At the lowest level, it is based on Internet Protocol (IP), a method for conveying and routing packets of information over various LAN media. Two

common protocols using IP are User Datagram Protocol (UDP) and Transmission Control Protocol (TCP). UDP conveys information to well-known "sockets" without confirmation of receipt. TCP establishes connections, also known as "sessions", which have end-to-end confirmation and guaranteed sequence of delivery.

1.4.39 Input/Output (I/O) (All protocols)

Physical inputs and outputs to and from a device, although the term sometimes describes network or "virtual" inputs or outputs. See also "Points".

1.4.40 I/O Expansion Unit (All protocols)

An I/O expansion unit provides additional point capacity to a digital controller

1.4.41 IP subnet (All protocols)

A group of devices which share a defined range IP addresses. Devices on a common IP subnet can share data (including broadcasts) directly without the need for the traffic to traverse an IP router.

1.4.42 JACE (Niagara Framework)

Java Application Control Engine. See paragraph NIAGARA FRAMEWORK SUPERVISORY GATEWAY

1.4.43 Local-Area Network (LAN) (All protocols)

A communication network that spans a limited geographic area and uses the same basic communication technology throughout.

1.4.44 Local Display Panels (LDPs) (All protocols)

A DDC Hardware with a display and navigation buttons, and must provide display and adjustment of points as shown on the Points Schedule and as indicated.

1.4.45 MAC Address (All protocols)

Media Access Control address. The physical device address that identifies a device on a Local Area Network.

1.4.46 Master-Slave/Token-Passing (MS/TP) (BACnet)

Data link protocol as defined by the BACnet standard. Multiple speeds (data rates) are permitted by the BACnet MS/TP standard.

1.4.47 Monitoring and Control (M&C) Software (All protocols)

The UMCS 'front end' software which performs supervisory functions such as alarm handling, scheduling and data logging and provides a user interface for monitoring the system and configuring these functions.

1.4.48 Network Number (BACnet)

A site-specific number assigned to each network. This network number must be unique throughout the BACnet Internetwork.

1.4.49 Niagara Framework (Niagara Framework)

A set of hardware and software specifications for building and utility control owned by Tridium Inc. and licensed to multiple vendors. The Framework consists of front end (M&C) software, web based clients, field level control hardware, and engineering tools. While the Niagara Framework is not adopted by a recognized standards body and does not use an open licensing model, it is sufficiently well-supported by multiple HVAC vendors to be considered a de-facto Open Standard.

1.4.50 Niagara Framework Supervisory Gateway (Niagara Framework)

DDC Hardware component of the Niagara Framework. A typical Niagara architecture has Niagara specific supervisory gateways at the IP level and other (non-Niagara specific) controllers on field networks (TP/FT-10, MS/TP, etc.) beneath the Niagara supervisory gateways. The Niagara specific controllers function as a gateway between the Niagara framework protocol (Fox) and the field network beneath. These supervisory gateways may also be used as general purpose controllers and also have the capability to provide a web-based user interface.

Note that different vendors refer to this component by different names. The most common name is "JACE"; other names include (but are not limited to)"EC-BOS", "FX-40", "TMN", "SLX" and "UNC".

1.4.51 Object (BACnet)

An ASHRAE 135 Object. The concept of organizing BACnet information into standard components with various associated Properties. Examples include Analog Input objects and Binary Output objects.

1.4.52 Object Identifier (BACnet)

A grouping of two Object properties: Object Type (e.g. Analog Value, Schedule, etc.) and Object Instance (in this case, a number). Object Identifiers must be unique within a device.

1.4.53 Object Instance (BACnet)

See paragraph OBJECT IDENTIFIER

1.4.54 Object Properties (BACnet)

Attributes of an object. Examples include present value and high limit properties of an analog input object. Properties are defined in ASHRAE 135; some are optional and some are required. Objects are controlled by reading from and writing to object properties.

1.4.55 Operator Configurable (All protocols)

Operator configurable values are values that can be changed from a single common front end user interface across multiple vendor systems.

For Niagara Framework Systems, a property, setting, or value is Operator Configurable when it is configurable from a Niagara Framework Front End.

1.4.56 Override (All protocols)

Changing the value of a point outside of the normal sequence of operation where the change has priority over the sequence and where there is a mechanism for releasing the change such that the point returns to the normal value. Overrides persist until released or overridden at the same or higher priority but are not required to persist through a loss of power. Overrides are often used by operators to change values, and generally originate at a user interface (workstation or local display panel).

1.4.57 Packaged Equipment (All protocols)

Packaged equipment is a single piece of equipment provided by a manufacturer in a substantially complete and operable condition, where the controls (DDC Hardware) are factory installed, and the equipment is sold and shipped from the manufacturer as a single entity. Disassembly and reassembly of a large piece of equipment for shipping does not prevent it from being packaged equipment. Package units may require field installation of remote sensors. Packaged equipment is also called a "packaged unit".

Note industry may use the term "Packaged System" to mean a collection of equipment that is designed to work together where each piece of equipment is packaged equipment and there is a network that connects the equipment together. A "packaged system" of this type is NOT packaged equipment; it is a collection of packaged equipment, and each piece of equipment must individually meet specification requirements.

1.4.58 Packaged Unit (All protocols)

See packaged equipment.

1.4.59 Performance Verification Test (PVT) (All protocols)

The procedure for determining if the installed BAS meets design criteria prior to final acceptance. The PVT is performed after installation, testing, and balancing of mechanical systems. Typically the PVT is performed by the Contractor in the presence of the Government.

1.4.60 Physical Segment (BACnet)

A single contiguous medium to which BACnet devices are attached (ASHRAE 135).

1.4.61 Plant Controllers

Plant controllers are typically used to control various equipment in mechanical rooms such as pumps, heat exchangers, and chillers.

1.4.62 Polling (All protocols)

A device periodically requesting data from another device.

1.4.63 Points (All protocols)

Physical and virtual inputs and outputs. See also paragraph INPUT/OUTPUT (I/O).

1.4.64 Proportional, Integral, and Derivative (PID) Control Loop (All protocols)

Three parameters used to control modulating equipment to maintain a setpoint. Derivative control is often not required for HVAC systems (leaving "PI" control).

1.4.65 Proprietary (BACnet)

Within the context of BACnet, any extension of or addition to object types, properties, PrivateTransfer services, or enumerations specified in ASHRAE 135. Objects with Object_Type values of 128 and above are Proprietary Objects. Properties with Property_Identifier of 512 and above are proprietary Properties.

1.4.66 Protocol Implementation Conformance Statement (PICS) (BACnet)

A document, created by the manufacturer of a device, which describes which portions of the BACnet standard may be implemented by a given device. ASHRAE 135 requires that all ASHRAE 135 devices have a PICS, and also defines a minimum set of information that must be in it. A device as installed for a specific project may not implement everything in its PICS.

1.4.67 Repeater (All protocols)

A device that connects two control network segments and retransmits all information received on one side onto the other.

1.4.68 Router (All protocols)

A device that connects two ASHRAE 135 networks and controls traffic between the two by retransmitting signals received from one side onto the other based on the signal destination. Routers are used to subdivide a BACnet internetwork and to limit network traffic. Examples include joining a BACnet Ethernet LAN to a BACnet MS/TP LAN. If a router is connected directly to the MCEN, it must be listed on the approved DIACAP equipment list and must be Marine Corps DADMS listed and approved.

1.4.69 Segment (All protocols)

A 'single' section of a control network that contains no repeaters or routers. There is generally a limit on the number of devices on a segment, and this limit is dependent on the topology/media and device type.

1.4.70 Standard BACnet Objects (BACnet)

Objects with Object_Type values below 128 and specifically enumerated in Clause 21 of ASHRAE 135. Objects which are not proprietary. See paragraph PROPRIETARY.

1.4.71 Standard BACnet Properties (BACnet)

Properties with Property_Identifier values below 512 and specifically enumerated in Clause 21 of ASHRAE 135. Properties which are not proprietary. See Proprietary.

1.4.72 Standard BACnet Services (BACnet)

ASHRAE 135 services other than ConfirmedPrivateTransfer or UnconfirmedPrivateTransfer. See paragraph PROPRIETARY.

1.4.73 Supervisory Building Controller

The Supervisory Building Controller is used to coordinate all equipment in a building, input scheduling, and is used as a connection point for transferring configuration files to the other controllers. The SBC must communicate with other controllers and equipment through a BACnet MS/TP bus. Depending on approvals and capabilities, the SBC may be used as a point of connection between the Camp Lejeune UMCS network (IP) and the building level control network (BACnet MS/TP).

Provide a five year service license on all Supervisory Controllers. Provide a reserve of 10 percent of additional points and additional devices on the Supervisory Controller license at the final project acceptance.

1.4.74 UMCS (All protocols)

UMCS stands for Utility Monitoring and Control System. The term refers to all components by which a project site monitors, manages, and controls real-time operation of HVAC and other building systems. These components include the UMCS "front-end" and all field building control systems connected to the front-end. The front-end consists of Monitoring and Control Software (user interface software), browser-based user interfaces and network infrastructure.

The network infrastructure (the "UMCS Network"), is an IP network connecting multiple building or facility control networks to the Monitoring and Control Software.

The UMCS at Camp Lejeune is an enterprise system that actively receives energy and building condition information from multiple sources and provides load shedding, electric metering, alarming, trending, scheduling, set point adjustment and device status of all supervisory building controllers for maintenance personnel. The UMCS receives real time electrical utility pricing data and automatically manages to Camp Lejeune's energy target. The existing UMCS consists of two servers, 1) Johnson Controls Incorporated (JCI) Metasys Extended Architecture (ADX server), and 2) Niagara AX supervisor (JCI FX web supervisor). Both of the systems communicate over the MCEN and either may be used to fulfill the requirements of this specification.

1.4.75 UMCS Network (All protocols)

The UMCS Network connects multiple building or facility control networks to the Monitoring and Control Software.

1.4.76 Writable Property (BACnet)

A Property is Writable when it can be changed through the use of one or more of the WriteProperty services defined in ASHRAE 135, Clause 15 regardless of the value of any other Property. Note that in the ASHRAE 135 standard, some Properties may be writable when the Out of Service Property is TRUE; for purposes of this Section, Properties that are only writable when the Out of Service Property is TRUE are not considered to be Writable.

1.5 PROJECT SEQUENCING

TABLE I: PROJECT SEQUENCING lists the sequencing of submittals as

specified in paragraph SUBMITTALS (denoted by an 'S' in the 'TYPE' column) and activities as specified in PART 3 EXECUTION (denoted by an 'E' in the 'TYPE' column). TABLE I does not specify overall project milestone and completion dates; these dates are specified in the contract documents.

a. Sequencing for Submittals: The sequencing specified for submittals is the deadline by which the submittal must be initially submitted to the Government. Following submission there will be a Government review period as specified in Section 01 33 00 SUBMITTAL PROCEDURES. If the submittal is not accepted by the Government, revise the submittal and resubmit it to the Government within 14 days of notification that the submittal has been rejected. Upon resubmittal there will be an additional Government review period. If the submittal is not accepted the process repeats until the submittal is accepted by the Government.

b. Sequencing for Activities: The sequencing specified for activities indicates the earliest the activity may begin.

c. Abbreviations: In TABLE I the abbreviation AAO is used for 'after approval of' and 'ACO' is used for 'after completion of'.

TABLE I. PROJECT SEQUENCING
(FOR NAVY PROJECTS WITH AN ACCEPTANCE ENGINEER)

ITEM #	TYPE	DESCRIPTION	SEQUENCING (START OF ACTIVITY OR DEADLINE FOR SUBMITTAL)
1	S		
2	S	DDC Contractor Design Drawings	
3	S	Manufacturer's Product Data	
4	S	Pre-construction QC Checklist	
5	E		AAO #1 thru #4
6	E	Start-Up and Start-Up Testing	ACO #5
7	S	Post-Construction QC Checklist	[_____] days ACO #6
8	S	Programming Software Configuration Software Niagara Framework Engineering Tool Niagara Framework Wizards	[_____] days ACO #6
9	S	Draft As-Built Drawings	[_____] days ACO #6

TABLE I. PROJECT SEQUENCING (FOR NAVY PROJECTS WITH AN ACCEPTANCE ENGINEER)			
ITEM #	TYPE	DESCRIPTION	SEQUENCING (START OF ACTIVITY OR DEADLINE FOR SUBMITTAL)
10	S,E	PVT Testing Activities	As indicated in PART 3 of this Section.
11	S	PVT Report	As indicated in PART 3 of this Section.
12	S	Controller Application Programs Controller Configuration Settings Niagara Framework Supervisory Gateway Backups	[_____] days AAO #11
13	S	Final As-Built Drawings	[_____] days AAO #11
14	S	O&M Instructions	AAO #13
15	S	Training Documentation	[_____] days before scheduled start of #16
16	E	Training	AAO #14 and #15
17	S	Closeout QC Checklist	ACO #16

1.6 SUBMITTALS

Government approval is required for submittals with a "G" designation; submittals not having a "G" designation are for Contractor Quality Control approval. Submittals with an "S" are for inclusion in the Sustainability eNotebook, in conformance to Section 01 33 29 SUSTAINABILITY REPORTING. Submit the following in accordance with Section 01 33 00 SUBMITTAL PROCEDURES:

SD-02 Shop Drawings

DDC Contractor Design Drawings; G

Draft As-Built Drawings; G

Final As-Built Drawings; G

SD-03 Product Data

Programming Software; G

Controller Application Programs; G

Configuration Software; G

Controller Configuration Settings; G

Manufacturer's Product Data; G

Niagara Framework Supervisory Gateway Backups; G

Niagara Framework Engineering Tool; G

Niagara Framework Wizards; G

SD-06 Test Reports

Start-Up Testing Report; G

PVT Procedures; G

PVT Report; G

Pre-Construction Quality Control (QC) Checklist; G

Post-Construction Quality Control (QC) Checklist; G

Control Contractor’s Performance Verification Testing Plan; G

Equipment Supplier’s Performance Verification Testing Plan; G

Endurance Testing Results; G

Performance Verification Test Report; G

Bus Waveform Report; G

SD-07 Certificates

Contractor Qualifications

SD-10 Operation and Maintenance Data

Operation and Maintenance (O&M) Instructions; G

Training Documentation; G

SD-11 Closeout Submittals

Enclosure Keys; G

Password Summary Report; G

Closeout Quality Control (QC) Checklist; G

1.7 DATA PACKAGE AND SUBMITTAL REQUIREMENTS

Technical data packages consisting of technical data and computer software (meaning technical data which relates to computer software) which are specifically identified in this project and which may be defined/required in other specifications must be delivered strictly in accordance with the CONTRACT CLAUSES and in accordance with the Contract Data Requirements

List, DD Form 1423. Data delivered must be identified by reference to the particular specification paragraph against which it is furnished. All submittals not specified as technical data packages are considered 'shop drawings' under the Federal Acquisition Regulation Supplement (FARS) and must contain no proprietary information and be delivered with unrestricted rights.

1.8 SOFTWARE FOR DDC HARDWARE AND GATEWAYS

Provide all software related to the programming and configuration of DDC Hardware and Gateways as indicated. License all Software to the MCB Camp Lejeune, NC for unrestricted use and reproduction on same. Software keys and "dongles" are not permitted. The term "controller" as used in these requirements means both DDC Hardware and Gateways.

1.8.1 Configuration Software

For each type of controller, provide the configuration tool software in accordance with Section 23 09 23.02 22 BACNET DIRECT DIGITAL CONTROL FOR HVAC AND OTHER BUILDING CONTROL SYSTEMS. Submit hard copies of the software user manuals for each software with the software submittal.

Submit Configuration Software on CD-ROM as a Technical Data Package. Submit 2 hard copies of the software user manual for each piece of software.

1.8.2 Controller Configuration Settings

For each controller, provide copies of the installed configuration settings as source code compatible with the configuration tool software for that controller in accordance with Section 23 09 23.02 22 BACNET DIRECT DIGITAL CONTROL FOR HVAC AND OTHER BUILDING CONTROL SYSTEMS.

Submit Controller Configuration Settings on CD-ROM as a Technical Data Package. Include on the CD-ROM a list or table of contents clearly indicating which files are associated with each device. Submit 2 copies of the Controller Configuration Settings CD-ROM.

1.8.3 Programming Software

For each type of programmable controller, provide the programming software in accordance with Section 23 09 23.02 22 BACNET DIRECT DIGITAL CONTROL FOR HVAC AND OTHER BUILDING CONTROL SYSTEMS. Submit hard copies of software user manuals for each software with the software submittal.

Submit Programming Software on CD-ROM as a Technical Data Package. Submit 2 hard copies of the software user manual for each piece of software.

1.8.4 Controller Application Programs

For each programmable controller, provide copies of the application program as source code compatible with the programming software for that controller in accordance with Section 23 09 23.02 22 BACNET DIRECT DIGITAL CONTROL FOR HVAC AND OTHER BUILDING CONTROL SYSTEMS.

Submit Controller Application Programs on CD-ROM as a Technical Data Package. Include on the CD-ROM a list or table of contents clearly indicating which application program is associated with each device.

Submit 2 copies of the Controller Application Programs CD-ROM.

1.8.5 Niagara Framework Supervisory Gateway Backups

For each Niagara Framework Supervisory Gateway, provide a backup of all software within the Niagara Framework Supervisory Gateway, including configuration settings. This backup must be sufficient to allow the restoration of the Niagara Framework Supervisory Gateway or the replacement of the Niagara Framework Supervisory Gateway.

Submit backups for each Niagara Framework Supervisory Gateway on CD-ROM as a Technical Data Package. Mark each backup indicating clearly the source Niagara Framework Supervisory Gateway.

1.8.6 Niagara Framework Engineering Tool (for all Niagara Framework system)

Provide a Niagara Framework Engineering Tool in accordance with Section 23 09 23.02 22 BACNET DIRECT DIGITAL CONTROL FOR HVAC AND OTHER BUILDING CONTROL SYSTEMS. Submit software user manuals with the Niagara Framework Engineering Tool submittal.

Submit the Niagara Framework Engineering Tool on CD-ROM as a Technical Data Package. Submit 2 hard copies of the software user manual for the Niagara Framework Engineering Tool.

1.9 CONTRACTOR QUALIFICATIONS

Submit documentation certifying the controls Contractor performing the work has completed at least three DDC systems installations of a similar design to this project, and programmed similar sequences of operation for at least two years. Personnel performing the installation, programming, checkout, commissioning and training must, at a minimum, have obtained all certifications required by the manufacturer for the tasks they are performing. Tasks include any activity required to execute and complete the contracted work. Certifications for each person must be submitted prior to the beginning of the contracted work. Certifications must be made available at any time upon the request from Camp Lejeune.

1.10 QUALITY CONTROL CHECKLISTS

The QC Checklist for Niagara Framework Based BACnet Systems in APPENDIX A of this Section must be completed by the Contractor's Chief Quality Control (QC) Representative and submitted as indicated.

The QC Representative must verify each item indicated and initial in the space provided to indicate that the requirement has been met. The QC Representative must sign and date the Checklist prior to submission to the Government.

1.10.1 Pre-Construction Quality Control (QC) Checklist

Complete items indicated as Pre-Construction QC Checklist items in the QC Checklist. Submit four copies of the Pre-Construction QC Checklist.

1.10.2 Post-Construction Quality Control (QC) Checklist

Complete items indicated as Post-Construction QC Checklist items in the QC Checklist. Submit four copies of the Post-Construction QC Checklist.

1.10.3 Closeout Quality Control (QC) Checklist

Complete items indicated as Closeout QC Checklist items in the QC Checklist. Submit four copies of the Closeout QC Checklist.

PART 2 PRODUCTS

Provide products meeting the requirements of Section 23 09 13.00 22 INSTRUMENTATION AND CONTROL DEVICES FOR HVAC, Section 23 09 23.02 22 BACNET DIRECT DIGITAL CONTROL FOR HVAC AND OTHER BUILDING CONTROL SYSTEMS for BACnet or Niagara BACnet systems, other referenced Sections, and this Section.

2.1 GENERAL PRODUCT REQUIREMENTS

Units of the same type of equipment must be products of a single manufacturer. Each major component of equipment must have the manufacturer's name and address, and the model and serial number in a conspicuous place. Materials and equipment must be standard products of a manufacturer regularly engaged in the manufacturing of these and similar products. The standard products must have been in a satisfactory commercial or industrial use for two years prior to use on this project. The two year use must include applications of equipment and materials under similar circumstances and of similar size. DDC Hardware not meeting the two-year field service requirement is acceptable provided it has been successfully used by the Contractor in a minimum of two previous projects. The equipment items must be supported by a service organization. Items of the same type and purpose must be identical, including equipment, assemblies, parts and components.

2.2 PRODUCT DATA

Provide manufacturer's product data sheets documenting compliance with product specifications for each product provided under Section 23 09 13.00 22 INSTRUMENTATION AND CONTROL DEVICES FOR HVAC, Section 23 09 23.02 22 BACNET DIRECT DIGITAL CONTROL FOR HVAC AND OTHER BUILDING CONTROL SYSTEMS, or this Section. Provide product data for all products in a single indexed compendium, organized by product type.

For all BACnet hardware: for each manufacturer, model and version (revision) of DDC Hardware provide the Protocol Implementation Conformance Statement (PICS) in accordance with Section 23 09 23.02 22 BACNET DIRECT DIGITAL CONTROL FOR HVAC AND OTHER BUILDING CONTROL SYSTEMS.

2.3 OPERATION ENVIRONMENT

Unless otherwise specified, provide products rated for continuous operation under the following conditions:

a. Pressure: Pressure conditions normally encountered in the installed location.

b. Vibration: Vibration conditions normally encountered in the installed location.

c. Temperature:

(1) Products installed indoors: Ambient temperatures in the range of 32 to 112 degrees F and temperature conditions outside this range

normally encountered at the installed location.

(2) Products installed outdoors or in unconditioned indoor spaces: Ambient temperatures in the range of -35 to +151 degrees F and temperature conditions outside this range normally encountered at the installed location.

d. Humidity: 10 to 95 percent relative humidity, noncondensing and humidity conditions outside this range normally encountered at the installed location.

2.4 WIRELESS CAPABILITY

For products incorporating any wireless capability (including but not limited to radio frequency (RF), infrared and optical), provide products for which wireless capability can be permanently disabled at the device. Optical and infrared capabilities may be disabled via a permanently affixed opaque cover plate.

2.5 ENCLOSURES

Provide each digital controller, including gateways, in a factory fabricated enclosure. Enclosures supplied as an integral (pre-packaged) part of another product are acceptable. Provide enclosures meeting the following minimum requirements:

a. Provide with a hinged lockable door and an offset removable metal back plate, except controllers integral with terminal units, like those mounted on VAV boxes. Provide like-keyed locks for all hinged panels provided and a set of two Enclosure Keys for each lockable enclosure on a single ring per enclosure with a tag identifying the enclosure the keys operate.

b. Provide each enclosure with a main external power on/off switch located inside the cabinet.

c. Provide each enclosure with a separate 120VAC duplex convenience receptacle.

d. Provide each enclosure surge and transient power protection. Surge protection is not required for small terminal unit controllers such as VAV controllers.

2.5.1 Outdoors

For enclosures located outdoors, provide enclosures meeting NEMA 250 Type 4 requirements.

Enclosures, control panels and controllers located outdoors must be able to withstand extreme ambient conditions, without malfunction or failure, whether or not the controlled equipment is running. If necessary, provide a thermostatically controlled panel heater in freezing locations, and an internal ventilating fan in locations exposed to direct sunlight.

2.5.2 Mechanical and Electrical Rooms

For enclosures located in mechanical or electrical rooms, provide enclosures meeting NEMA 250 Type 4 requirements.

For enclosures located in mechanical rooms containing steam service or equipment, provide enclosures meeting NEMA 250 Type 4 requirements.

2.5.3 Other Locations

For enclosures in other locations including but not limited to occupied spaces, above ceilings, and in plenum returns, provide enclosures meeting NEMA 250 Type 1 requirements.

2.6 WIRE AND CABLE

Provide wire and cable meeting the requirements of NFPA 70 and NFPA 90A in addition to the requirements of this specification and referenced specifications.

2.6.1 Terminal Blocks

For terminal blocks which are not integral to other equipment, provide terminal blocks which are insulated, modular, feed-through, clamp style with recessed captive screw-type clamping mechanism, suitable for DIN rail mounting, and which have enclosed sides or end plates and partition plates for separation.

2.6.2 Control Wiring for Binary Signals

For Control Wiring for Binary Signals, provide 18 AWG copper or thicker wire rated for 300-volt service.

2.6.3 Control Wiring for Analog Signals

For Control Wiring for Analog Signals, provide in accordance with the control manufacturer's recommendations and the following: Provide 18 AWG or thicker, copper, single- or multiple-twisted wire meeting the following requirements:

a. minimum 2 inch lay of twist

b. 100 percent shielded pairs

c. at least 300-volt insulation

d. each pair has a 20 AWG tinned-copper drain wire and individual overall pair insulation

e. cables have an overall aluminum-polyester or tinned-copper cable-shield tape, overall 20 AWG tinned-copper cable drain wire, and overall cable insulation.

2.6.4 MS/TP Communication Bus

a. Provide system manufacturer's recommended or preferred cabling.

b. Follow cable manufacturer's recommendations or requirements based on the cable usage, such as outdoors and/or underground.

c. Splices in communication cable are not allowed. Segments of communication cable between field devices must be solid lengths with no splices.

2.6.5 Conduit

Conduit for controls less than 100 volts must be colored blue. Junction box cover plates for controls must be blue. Fittings and boxes do not need to be blue.

2.6.6 Power Wiring for Control Devices

For 24-volt circuits, provide insulated copper 18 AWG or thicker wire rated for 300 VAC service. For 120-volt circuits, provide 14 AWG or thicker stranded copper wire rated for 600-volt service.

2.6.7 Transformers

Provide UL 5085-3 approved transformers. Select transformers sized so that the connected load is no greater than 80 percent of the transformer rated capacity.

PART 3 EXECUTION

3.1 INSTALLATION

Fully install and test the control system in accordance Section 23 09 13.00 22 INSTRUMENTATION AND CONTROL DEVICES FOR HVAC, Section 23 09 23.02 22 BACNET DIRECT DIGITAL CONTROL FOR HVAC AND OTHER BUILDING CONTROL SYSTEMS for BACnet or Niagara BACnet systems, and this Section.

3.1.1 Pre-Installation Meeting

Prior to starting the installation, meet with the Contracting Officer's Technical Representative (COTR) and the BAS owner to develop a mutual understanding relative to the details of the DDC system requirements. Requirements to be discussed include required submittals, work schedule, and field quality control.

3.1.2 Dielectric Isolation

Provide dielectric isolation where dissimilar metals are used for connection and support. Install control system in a matter that provides clearance for control system maintenance by maintaining access space required to calibrate, remove, repair, or replace control system devices. Install control system such that it does not interfere with the clearance requirements for mechanical and electrical system maintenance.

3.1.3 Penetrations in Building Exterior

Make all penetrations through and mounting holes in the building exterior watertight.

3.1.4 Device Mounting Criteria

Install devices in accordance with the manufacturer's recommendations and as indicated and shown. Provide a weathershield for all devices installed outdoors. Provide clearance for control system maintenance by maintaining access space required to calibrate, remove, repair, or replace control system devices. Provide clearance for mechanical and electrical system maintenance; do not not interfere with the clearance requirements for mechanical and electrical system maintenance. All devices must be mounted only to the cabinet backplane with adequate space allowed for

serviceability and proper heat dissipation from devices.

3.1.5 Labels and Tags

Key all labels and tags to the unique identifiers shown on the As-Built drawings. For labels exterior to protective enclosures provide engraved plastic labels mechanically attached to the enclosure or DDC Hardware. Labels inside protective enclosures may be adhesive labels. Provide white labels with bold black block lettering. For tags, provide plastic or metal tags mechanically attached directly to each device or attached by a metal chain or wire.

a. Label all Enclosures and DDC Hardware.

b. Label each control panel, control device, actuator and sensor.

c. Label exterior of control actuator indicating the (full) open and (full) closed positions.

d. Components mounted above a ceiling or service hatch must also have the component identification visible from below. Examples: A VAV controller,or exhaust fan relay, identification would be included on the ceiling grid, or service hatch, in the area of the controller.

e. Tag Airflow measurement arrays (AFMA) with flow rate range for signal output range, duct size, and pitot tube AFMA flow coefficient.

f. Tag duct static pressure taps at the location of the pressure tap

3.1.6 Surge and Transient Protection

3.1.6.1 Power-Line Surge Protection

Provide surge suppressors on the incoming power at each direct digital controller or grouped terminal controllers and must be installed externally to the device or devices being protected. Surge suppressors are to be rated in accordance with UL 1449, have a fault indicating light, and conform to the following:

a. The device must be a transient voltage surge suppressor, hard-wire type individual equipment protector for 120 VAC/1 phase/2 wire plus ground.

b. The device must react within 5 nanoseconds and automatically reset.

c. The voltage protection threshold, line to neutral, must be no more than 211 volts.

d. Provide the device with an independent secondary stage equal to or greater than the primary stage joule rating.

e. The primary suppression system components must be pure silicon avalanche diodes.

f. The secondary suppression system components must be silicon avalanche diodes or metal oxide varistors.

g. Procide device with an indication light to indicate the protection components are functioning.

h. All system functions of the transient suppression system must be individually fused and not short circuit the AC power line at any time.

i. Provide device with an EMI/RFI noise filter with a minimum attenuation of 13 dB at 10 kHz to 300 MHz.

j. The device must comply with IEEE C62.41.1 and IEEE C62.41.2, Class "B" requirements and be tested according to IEEE C62.45.

k. The device is to be capable of operating between minus 20 degrees F and plus 122 degrees F.

3.1.6.2 Surge Protection for Transmitter and Control Wiring

Provide surge and transient protection for DDC controllers and DDC network related devices connected to phone lines, network communication lines, lines from exterior equipment, and lines from other buildings including mechanical buildings in accordance with the following:

a. The device must provide continuous, non-interrupting protection, and automatically reset after safely eliminating transient surges.

b. The protection must react within 5 nanoseconds using only solid-state silicon avalanche technology.

c. Install the device at the distance recommended by its manufacturer.

3.1.7 Basic Cybersecurity Requirements

3.1.7.1 Passwords

For all devices with a password, change the password from the default password. Do not use the same password for more than one device. Coordinate selection of passwords with Contracting Officer. Provide a Password Summary Report documenting the password for each device and describing the procedure to change the password for each device.

Provide two hardcopies of the Password Summary Report, each copy in its own sealed envelope.

3.1.7.2 Wireless Capability

Unless otherwise indicated, disable wireless capability (including but not limited to radio frequency (RF), infrared and optical) for all devices with wireless capability. Optical and infrared capabilities may be disabled via a permanently affixed opaque cover plate. Password protecting a wireless connections does not meet this requirement; the wireless capability must be disabled.

3.1.7.3 IP Network Physical Security

Install all IP Network media, to include all power and signal wire, in rigidconduit. Install all IP devices including but not limited to IP-enabled DDC hardware and IP Network Hardware in lockable enclosures.

3.1.8 Wiring Criteria

a. Run circuits operating at more than 100 volts in rigid or flexible

conduit, metallic tubing, covered metal raceways, or armored cable.

b. Run all control wiring in rigid or flexible conduit, metallic tubing, or covered metal raceways, unless noted otherwise. All control wiring located inside mechanical rooms to be in conduit or metallic tubing. All conduit and junction box covers to be blue in color."

c. Do not run binary control circuit wiring in the same conduit as power wiring over 100 volts. Where analog signal wiring requires conduit, do not run in the same conduit with AC power circuits or control circuits operating at more than 100 volts.

d. Provide circuit and wiring protection required by NFPA 70.

e. Minimum conduit size is 3/4-inch, except 1/2-inch may be used from last junction box to the terminal device. Maximum conduit fill is 40 percent or the cable manufacturer's recommended amount whichever is less. Provide plastic end sleeves at all conduit terminations to protect wiring from burrs.

f. Do not bury aluminum-sheathed cable or aluminum conduit in concrete.

g. Input/output identification: Permanently label each field-installed wire, cable, and pneumatic tube at each end with descriptive text using a commercial wire marking system. Labels is to fully encircle the wire, cable, or tube. The single line text is to run parallel to the wire, cable, or tube and must be repeated so as to be viewable without twirling or twisting the wire. Locate the markers within 2 inches of each termination. Include on the label the type of network and destination of cable (ex. BACnet/AHU-1). Match the names and I/O number to the project's point list. Similarly label all power wiring serving control devices, including the word "power" and panel board and circuit number, or transformer location in the label. Number each pneumatic tube every six feet. Label all terminal blocks with alpha/numeric labels. All wiring and the methods must be in accordance with UL 508A.

h. Permanently display controller wiring diagram for each controller on the inside of the control cabinet door. Diagram must be neatly lettered and taped or adhered with sticky back label.

i. Conduit identification: Label all conduits at 36 inches from terminations, boxes, or bends. Labels to be 3/8 inches, black lettering on white background, and indicate what system the conduit contains. Label is to be visible and legible from at least three sides with a minimum dimension of 1.9 inches x 4 inches. Conduit that includes power circuits are to be labeled with source panel and circuit, and destination cabinet or equipment.

j. Each terminal device is to have its own terminal conduit run. Device boxes or devices are not be used as "pass thru" for wiring.

k. Run conduit to equipment and devices tight to walls, and ceilings. Avoid conduit on the floor, i.e. conduit must not block access to or past equipment. Flex conduit is to be used only when EMT or rigid conduit is not able to satisfy the application such as a transition to a sensor or equipment. Limit Flex conduit to a maximum length of 3 ft.

l. For controller power, provide new 120 VAC circuits with ground if not

defined on the electrical drawings. Provide each circuit with a dedicated breaker and run wiring in its own conduit, separate from any control wiring. Connect the controller's ground wire to the electrical panel ground. Conduit grounds are not acceptable.

m. Power the Supervisory Building Controllers (SBC) from a dedicated transformer for the SBC only. Each control cabinet must have a dedicated 24 volt transformer. The 120 VAC power branch circuit are to be dedicated to the DDC control system. Factory provided transformers in equipment must be used as a source of power only for the control devices intended by the equipment manufacturer.

n. Surge Protection: Install surge protection according to manufacturer's instructions. Multiple controllers fed from a common power supply may be protected by a common surge protector, properly sized for the total connected devices.

o. Make all terminations in panels at a terminal block if not connected directly to a panel device, ie Field Controller, Supervisory Controller. No wire nuts are allowed in panels. High and low voltage wires must not land on the same terminal block unless they are separated and of a different color and/or clearly identified.

p. Grounding: Ground controllers and cabinets to a good earth ground as specified in Section 26 20 00 INTERIOR DISTRIBUTION SYSTEM. Conduit grounding is not acceptable. All grounding must have a direct path to the building earth ground. Ground sensor drain wire shields at the controller end.

q. Correct all associated MS/TP and SA bus wiring, termination, end of line, and ground loop problems.

r. Run wiring in panel enclosures in covered wire track.

s. Control cabinets and wiring boxes must be clean of all debris.

t. Low voltage cable must not be supported directly from "all thread" rod. If cabling/wiring is permitted to be run without conduit/raceway it must be supported using a retaining device such as a bridle ring or J hook, and where appropriate connected to the all thread rod using a standoff device. Openly installed cabling/wiring must be approved by Camp Lejeune Public Works Department.

u. For serviceability, allow a minimum of 2 inches of exposed wire or cable from any termination point, i.e. between Panduit and field controller terminations.

3.1.9 Network and Telephone Communication Lines

When telephone lines or network connections by the Government are required, provide the Contracting Officer at least 120 days advance notice of need. Provide one inch conduit and two (2)green Cat 6 cables from the point of connection of the BAS to the point of connection to the MCEN (most likely in the telephone equipment room). Cables must be terminated and tested.

3.1.10 Interface With Existing UMCS

Provide 16 hours of assistance to the Government with interfacing the BAS

to the Base wide UMCS. The Government will make the final connection of the BAS to the MCEN. This 16 hours does not include completion or corrections to the installed BAS as defined in the contract documents. This 16 hours is for assisting the interface and for making revisions to the BAS that may be needed outside of the contract requirements. As-Built control drawings must be available for the UMCS operator performing the interfacing.

3.2 DRAWINGS AND CALCULATIONS

Provide drawings in the form and arrangement indicated and shown. Use the same abbreviations, symbols, nomenclature and identifiers shown. Assign a unique identifier as shown to each control system element on a drawing. When packaging drawings, group schedules by system. When space allows, it is permissible to include multiple schedules for the same system on a single sheet. Except for drawings covering all systems, do not put information for different systems on the same sheet.

Provide a title sheet for the control system drawing set. Include the project title, project location, contract number, the controls contractor preparing the drawings, an index of the control drawings in the set, and a legend of the symbols and abbreviations used throughout the control system drawings. The Title Block of each drawing must include the Drawing revision, i.e. Submittal, Revision 1, Revision 2, As-Built, etc., including the date.

Submit hardcopy drawings on [ISO A1 34 by 22 inches][or][A3 17 by 11 inches] sheets, and electronic drawings in PDF and in [AutoCAD 2016] format. In addition, submit electronic drawings in editable Excel format for all drawings that are tabular, including but not limited to the Point Schedule and Equipment Schedule.

a. Submit DDC Contractor Design Drawings consisting of each drawing indicated with pre-construction information depicting the intended control system design and plans. Submit DDC Contractor Design Drawings as a single complete package: 2 hard copies and 2 copies on CD-ROM.

b. Submit Draft As-Built Drawings consisting of each drawing indicated updated with as-built data for the system prior to PVT. Submit Draft As-Built Drawings as a single complete package: 2 hard copies and 2 copies on CD-ROM.

c. Submit Final As-Built Drawings consisting of each drawing indicated updated with all final as-built data. Final As-Built Drawings as a single complete package: 2 hard copies and 2 copies on CD-ROM.

3.2.1 Sample Drawings

Sample drawings in electronic format are available at the Whole Building Design Guide page for this section:
http://www.wbdg.org/ffc/dod/unified-facilities-guide-specifications-ufgs/ufgs-23-09-00
These drawings may prove useful in demonstrating expected drawing formatting and example content and are provided for illustrative purposes only. Note that these drawings do not meet the content requirements of this Section and must be completed to meet project requirements.

3.2.2 Drawing Index and Legend

Provide an HVAC Control System Drawing Index showing the name and number of the building, military site, State or other similar designation, and Country. In the Drawing Index, list all Contractor Design Drawings, including the drawing number, sheet number, drawing title, and computer filename when used. In the Design Drawing Legend, show and describe all symbols, abbreviations and acronyms used on the Design Drawings. Provide a single Index and Legend for the entire drawing package.

3.2.3 Thermostat and Occupancy Sensor Schedule

Provide a thermostat and occupancy sensor schedule containing each thermostat's unique identifier, room identifier and control features and functions as shown. Provide a single thermostat and occupancy sensor schedule for the entire project.

3.2.4 Valve Schedule

Provide a valve schedule containing each valve's unique identifier, size, flow coefficient Kv (Cv), pressure drop at specified flow rate, spring range, positive positioner range, actuator size, close-off pressure to torque data, dimensions, and access and clearance requirements data. In the valve schedule include actuator selection data supported by calculations of the force required to move and seal the valve, access and clearance requirements. Provide a single valve schedule for the entire project.

3.2.5 Damper Schedule

Provide a damper schedule containing each damper's unique identifier, type (opposed or parallel blade), nominal and actual sizes, orientation of axis and frame, direction of blade rotation, actuator size and spring ranges, operation rate, positive positioner range, location of actuators and damper end switches, arrangement of sections in multi-section dampers, and methods of connecting dampers, actuators, and linkages. Include the AMCA 511 maximum leakage rate at the operating static-pressure differential for each damper in the Damper Schedule. Provide a single damper schedule for the entire project.

3.2.6 Project Summary Equipment Schedule

Provide a project summary equipment schedule containing the manufacturer, model number, part number, descriptive name, firmware version, serial number, physical location (e.g. Building 4, room 112 overhead), and power requirements (e.g. AC/DC voltage and power draw) for each control device, hardware and component provided under this specification. Provide a single project equipment schedule for the entire project.

3.2.7 Equipment Schedule

Provide system equipment schedules containing the unique identifier, manufacturer, model number, part number and descriptive name for each control device, hardware and component provided under this specification. Provide a separate equipment schedule for each HVAC system.

3.2.8 Occupancy Schedule

Provide an occupancy schedule drawing containing the same fields as the occupancy schedule Contract Drawing with Contractor updated information. Provide a single occupancy schedule for the entire project.

3.2.9 DDC Hardware Schedule

Provide a single DDC Hardware Schedule for the entire project and including following information for each device.

3.2.9.1 DDC Hardware Identifier

The Unique DDC Hardware Identifier for the device.

3.2.9.2 HVAC System

The system "name" used to identify a specific system (the name used on the system schematic drawing for that system).

3.2.9.3 BACnet Device Information

3.2.9.3.1 Device Object Identifier

Assign unique device "Object_Identifier" property numbers or device instances for each device on the BACnet internetwork. Provide for future modification of the device instance number. Instance numbers must be field assignable.

3.2.9.3.2 Device Object Name Property Text

Each object on the Camp Lejeune UMCS has a unique point name, which is made up of the object or short name stored in the controller and the equipment identifier, which is stored in the supervisory building controller (SBC). The long point name combines this object name with the name stored in the SBC that describes the controller or location of the object. The device object name property field must support 32 minimum printable characters. The point name follows the general convention:

Building.Equipment.Object Name

Example: HP512.AHU-3.DA-T. See Attachments one through three for equipment names, object names, object groupings, and area names.

3.2.9.3.3 Object Name Property Text (Other than Device Objects)

The object name identifies the specific point. Only object names on the approved Camp Lejeune list must be used. From the example above, the point name is: "DA-T". See Attachment for the approved Camp Lejeune list. The object name property field must support 32 minimum printable characters.

3.2.9.3.4 Object Description

The controller must also store an alpha numeric description of the object name. The controller must support a minimum of 30 printable characters. From the example above the object description is: "Discharge Air Temperature".

3.2.9.3.5 List of Attachments

The following attachments can be found at the end of this specification.

Attachment 1 - Equipment Names

Attachment 2 - Object Names
Attachment 3 - Object Grouping

3.2.9.3.6 Setpoints

All setpoints must be BACnet exposed for auto discovery purposes if needed.

3.2.9.3.7 Plant Controllers

Equipment such as VFD's, chillers, and boilers must have hardwired enable(start/stop) and status points from the plant controller. VFD's must also have a hardwired speed command. Software points are not allowable. Additionally, this equipment must have a BACnet interface for monitoring.

3.2.9.3.8 Network Number

The Network Number for the device.

3.2.9.3.9 MAC Address

The MAC Address for the device. For MS/TP networks, assign addresses from 0-127. Do not use the controls manufacturer reserved addresses for field controllers. This is typically 0-3. Also the BACnet Instance ID for MAC Address 127, Trunk 1, is reserved for the Supervisory controller. Supervisory Controller Global ID and instance numbers are to be obtained from Camp Lejeune Public Works Operations to ensure duplicates do not occur. Point of Contact:

Public Works Division/EMCS
1005 Michael Road/Building 1005
MCB Camp Lejeune, NC 28547
(910) 450-7846

3.2.9.3.10 BTL Listing

The BTL Listing of the device. If the device is listed under multiple BTL Profiles, indicate the profile that matches the use and configuration of the device as installed.

3.2.9.3.11 Proprietary Services Information

If the device uses non-standard ASHRAE 135 services as defined and permitted in Section 23 09 23.02 22 BACNET DIRECT DIGITAL CONTROL FOR HVAC AND OTHER BUILDING CONTROL SYSTEMS, indicate that the device uses non-standard services and include a description of all non-standard services used. Describe usage and content such that a device from another vendor can interoperate with the device using the non-standard service. Provide descriptions with sufficient detail to allow a device from a different manufacturer to be programmed to both read and write the non-standard service request:

a. read: interpret the data contained in the non-standard service and;

b. write: given similar data, generate the appropriate non-standard service request.

3.2.9.3.12 Alarming Information

Indicate whether the device is used for alarm generation, and which types of alarm generation the device implements: intrinsic, local algorithmic, remote algorithmic.

3.2.9.3.13 Scheduling Information

Indicate whether the device is used for scheduling.

3.2.9.3.14 Trending Information

Indicate whether the device is used for trending, and indicate if the device is used to trend local values, remote values, or both.

3.2.9.4 Niagara Station ID

The Niagara Station ID for each Niagara Framework Supervisory Gateway

3.2.10 Points Schedule

Provide a Points Schedule in tabular form for each HVAC system, with the indicated columns and with each row representing a hardware point, network point or configuration point in the system.

a. When a Points Schedule was included in the Contract Drawing package, use the same fields as the Contract Drawing with updated information in addition to the indicated fields.

b. When Point Schedules are included in the contract package, items requiring contractor verification or input have been shown in angle brackets ("<" and ">"), such as <___> for a required entry or <value> for a value requiring confirmation. Complete all items in brackets as well as any blank cells. Do not modify values which are not in brackets without approval.

Points Schedule Columns must include:

3.2.10.1 Point Name

The abbreviated name for the point using the indicated naming convention. All points must adhere to the Camp Lejeune standard naming conventions.

3.2.10.2 Description

A brief functional description of the point such as "Supply Air Temperature".

3.2.10.3 DDC Hardware Identifier

The Unique DDC Hardware Identifier shown on the DDC Hardware Schedule and used across all drawings for the DDC Hardware containing the point.

3.2.10.4 Settings

The value and units of any setpoints, configured setpoints, configuration parameters, and settings related to each point.

3.2.10.5 Range

The range of values, including units, associated with the point, including

but not limited to a zone temperature setpoint adjustment range, a sensor measurement range, occupancy values for an occupancy input, or the status of a safety.

3.2.10.6 Input or Output (I/O) Type

The type of input or output signal associated with the point. Use the following abbreviations for entries in this column:

a. AI: The value comes from a hardware (physical) Analog Input

b. AO: The value is output as a hardware (physical) Analog Output

c. BI: The value comes from a hardware (physical) Binary Input

d. BO: The value is output as a hardware (physical) Binary Output

e. PULSE: The value comes from a hardware (physical) Pulse Accumulator Input

f. NET-IN: The value is provided from the network (generally from another device). Use this entry only when the value is received from another device as part of scheduling or as part of a sequence of operation, not when the value is received on the network for supervisory functions such as trending, alarming, override or display at a user interface.

g. NET-OUT: The value is provided to another controller over the network. Use this entry only when the value is transmitted to another device as part of scheduling or as part of a sequence of operation, not when the value is transmitted on the network for supervisory functions such as trending, alarming, override or display at a user interface.

3.2.10.7 Object and Property Information

The Object Type and Instance Number for the Object associated with the point. If the value of the point is not in the Present_Value Property, then also provide the Property ID for the Property containing the value of the point. Any point that is displayed at the front end or on an LDP, is trended, is used by another device on the network, or has an alarm condition must be documented here.

3.2.10.8 Niagara Station ID

The Niagara Station ID of the Niagara Framework Supervisory Gateway the point is mapped into.

3.2.10.9 Network Data Exchange Information (Gets Data From, Sends Data To)

Provide the DDC Hardware Identifier of other DDC Hardware the point is shared with.

3.2.10.10 Override Information (Object Type and Instance Number)

For each point requiring an Override and not residing in a Niagara Framework Supervisory Gateway, indicate if the Object for the point is Commandable or, if the use of a separate Object was specifically approved by the Contracting Officer, provide the Object Type and Instance Number of

the Object to be used in overriding the point.

3.2.10.11 Alarm Information

For Niagara BACnet systems: Indicate the Alarm Generation Type and Notification Class Object Instance Number for each point requiring an alarm. (Note that not all alarms will have a Notification Class Object.)

3.2.10.12 Configuration Information

Indicate the means of configuration associated with each point. For points in a Niagara Framework Supervisory Gateway, indicate the point within the Niagara Framework Supervisory Gateway used to configure the value. For other points:

a. For Operator Configurable Points indicate BACnet Object and Property information (Name, Type, Identifiers) containing the configurable value. Indicate whether the property is writable always, or only when Out_Of_Service is TRUE.

b. For Configurable Points indicate the BACnet Object and Property information as for Operator Configurable points, or identification of the configurable settings from within the engineering software for the device or identification of the hardware settings on the device.

3.2.11 Riser Diagram

The Riser Diagram of the Building Control Network may be in tabular form, and must show all DDC Hardware and all Network Hardware, including network terminators. For each item, provide the unique identifier, common descriptive name, physical sequential order (previous and next device on the network), room identifier and location within room. If applicable, show connections to existing networks and include the existing network in the riser diagram. Include surge protection device locations on the riser when the field controller communication trunk is leaving or entering a building. A single riser diagram must be submitted for the entire system.

3.2.12 Control System Schematics

Provide control system schematics in the same form as the control system schematic Contract Drawing with Contractor updated information. Provide a control system schematic for each HVAC system. Include the following:

a. Location of each input and output device,specify room # for remote devices.

b. Flow diagram for each piece of HVAC equipment

c. Name or symbol for each control system component, such as V-1 for a valve

d. Setpoints, with differential or proportional band values

e. Written sequence of operation for the HVAC equipment

f. Valve and Damper Schedules, with normal (power fail) position

g. Control cabinet general layout, include all devices, point count,

point connection terminal numbers, and cable type (18/2, 18/3, etc); 24VAC VA power requirement for all devices including those powered from the cabinet.

3.2.13 Control Logic Diagrams

Provide HVAC equipment control logic diagrams. Indicate required electrical interlocks. Logic diagram schematics must include 120 VAC and low voltage devices in each panel. Logic diagram schematics must also include all field devices (sensors, relays actuators, etc) and any connection point to controlled equipment or devices.

3.2.14 Controller, Motor Starter and Relay Wiring Diagram

Provide controller wiring diagrams as functional wiring diagrams which show the interconnection of conductors and cables to each controller and to the identified terminals of input and output devices, starters and package equipment. Show necessary jumpers and ground connections and the labels of all conductors. Identify sources of power required for control systems and for packaged equipment control systems back to the panel board circuit breaker number, controller enclosures, magnetic starter, or packaged equipment control circuit. Show each power supply and transformer not integral to a controller, starter, or packaged equipment. Show the connected volt-ampere load and the power supply volt-ampere rating. Provide wiring diagrams for each HVAC system.

3.3 CONTROLLER TUNING

Tune each controller in a manner consistent with that described in the ASHRAE FUN IP and in the manufacturer's instruction manual. Tuning must consist of adjustment of the proportional, integral, and where applicable, the derivative (PID) settings to provide stable closed-loop control. Each loop must be tuned while the system or plant is operating at a high gain (worst case) condition, where high gain can generally be defined as a low-flow or low-load condition. Upon final adjustment of the PID settings, in response to a change in controller setpoint, the controlled variable must settle out at the new setpoint with no more than two (2) oscillations above and below setpoint. Upon settling out at the new setpoint the controller output must be steady. With the exception of naturally slow processes such as zone temperature control, the controller must settle out at the new setpoint within five (5) minutes. Set the controller to its correct setpoint and record and submit the final PID configuration settings with the O&M Instructions and on the associated Points Schedule.

3.4 START-UP

3.4.1 Start-Up Test

Perform the following startup tests for each control system to ensure that the described control system components are installed and functioning per this specification.

Adjust, calibrate, measure, program, configure, set the time schedules, and otherwise perform all necessary actions to ensure that the systems function as indicated and shown in the sequence of operation and other contract documents.

3.4.1.1 Systems Check

An item-by-item check must be performed for each HVAC system

3.4.1.1.1 Step 1 - System Inspection

a. Confirm all mechanical installation work is success fully completed and started up by the appropriate personnel.

b. With the system in unoccupied mode and with fan hand-off-auto switches in the OFF position, verify that power and main air are available where required and that all output devices are in their failsafe and normal positions. Compile a list of output devices and document device normal position and date verified.

c. Inspect each local display panel and each M&C Client to verify that all displays indicate shutdown conditions.

d. Confirm each controller works properly in stand-alone mode by disconnecting the BACnet bus.

3.4.1.1.2 Step 2 - Calibration Accuracy Check

Perform a two-point accuracy check of the calibration of each HVAC control system sensing element and transmitter by comparing the value from the test instrument to the network value provided by the DDC Hardware. Use digital indicating test instruments, such as digital thermometers, motor-driven psychrometers, and tachometers. Use test instruments with accuracy at least twice as accurate as the specified sensor accuracy and with calibration traceable to National Institute of Standards and Technology standards. Check the first check point in the bottom one-third of the sensor range, and the second in the top one-third of the sensor range. Verify that the sensing element-to-DDC readout accuracies at two points are within the specified product accuracy tolerances, and if not recalibrate or replace the device and repeat the calibration check. Compile a list of each sensor and document the sensor reading, initial measured value, sensor calibrated value and sensor calibration date.

3.4.1.1.3 Step 3 - Actuator Range Check

With the system running, apply a signal to each actuator through the DDC Hardware controller. Verify proper operation of the actuators and positioners for all actuated devices and record the signal levels for the extreme positions of each device. Vary the signal over its full range, and verify that the actuators travel from zero stroke to full stroke within the signal range. Where applicable, verify that all sequenced actuators move from zero stroke to full stroke in the proper direction, and move the connected device in the proper direction from one extreme position to the other. For valve actuators and damper actuators, perform the actuator range check under normal system pressures. Compile a list of each device and document the span for that device, span setting, and adjustment date.

3.4.1.2 Weather Dependent Test

Perform weather dependent test procedures in the appropriate climatic season.

3.4.2 Start-Up Testing Report

Submit 4 copies of the Start-Up Testing Report. The report may be submitted as a Technical Data Package documenting the results of the tests performed and certifying that the system is installed and functioning per this specification, and is ready for the Performance Verification Test (PVT). Include lists compiled during Start-Up tests.

3.5 PERFORMANCE VERIFICATION TESTING

3.5.1 General

PVT testing must demonstrate compliance of controls work with contract document requirements and must be performed by the Controls Contractor and Equipment Suppliers.

3.5.2 Performance Verification Testing and Commissioning

PVT testing is a Government quality assurance function that includes systems trending and field tests. Commissioning is a quality control function that is the Commissioning Team's responsibility to the extent required by this contract.

3.5.3 Performance Verification Testing of Equipment with Packaged Controls

Controls Contractor and Equipment Supplier(s) must share and coordinate PVT testing responsibilities for equipment provided with on-board factory packaged controls such as boiler controllers, dedicated outside air systems (DOAS's), and packaged pumping systems.

3.5.3.1 Controls Contractor Responsibilities

The Controls Contractor must provide a PVT Plan separate from Equipment Supplier's performance verification testing plan, perform endurance testing, and perform PVT testing concurrent with Equipment Suppliers' testing for equipment provided with on-board factory packaged controls to demonstrate the following:

a. Equipment enabling and disabling.

b. Equipment standard and optional control points necessary to accomplish functionality regardless if specified in contract documents or not.

c. Equipment standard and optional alarms critical to safe operation regardless if specified in contract documents or not.

d. All control points added by Controls Contractor in addition to onboard factory packaged controls regardless if specified in contract documents or not.

Refer to paragraphs titled "Performance Verification Test Plan" and "Endurance Testing" for additional information.

3.5.3.2 Equipment Supplier Responsibilities

Each Equipment Supplier must provide PVT Plans separate from Controls Contractor's plans and perform PVT testing concurrent with Controls Contractor's testing for their equipment provided with on-board factory packaged controls to demonstrate the following:

a. Equipment standard and optional control features necessary to accomplish functionality regardless if specified in contract documents or not.

b. Equipment standard and optional operation modes necessary to accomplish functionality regardless if specified in contract documents or not.

c. Equipment standard and optional alarm conditions for safe operation regardless if specified in contract documents or not.

Refer to all paragraphs under paragraph titled “Performance Verification Testing” except for section titled “Endurance Testing” for additional information.

3.5.4 Sequencing of Performance Verification Testing Activities

PVT activities must be sequenced with major activities listed below for Test and Balance (TAB) Contractor, Equipment Suppliers, Commissioning Specialists, and others to demonstrate fully functioning systems. Major activities as applicable to this contract must be sequenced as indicated in TABLE II: SEQUENCING OF PVT TESTING ACTIVITIES

TABLE II: SEQUENCING OF PVT TESTING ACTIVITIES

SEQUENCE	ITEM
1	Submission, review, and approval of Control Contractors PVT Plans.
2	Submission, review, and approval of Equipment Suppliers PVT Plans.
3	Submission, review, and approval of certified final Test and Balance Report.
4	Conduct endurance testing.
5	Submission, review, and approval of all of the Commissioning Specialists completed functional performance tests.
6	Submission, review, and approval of endurance testing.
7	Request Contracting Officer to allow beginning of Government-witnessed PVT testing.
8	Contracting Officers approval to begin PVT testing.
9	Conduct PVT field work.
10	Governments verbal approval of PVT field work for all systems.
11	Conduct Test and Balance verification field work.

TABLE II: SEQUENCING OF PVT TESTING ACTIVITIES	
SEQUENCE	ITEM
12	Governments written approval of Test and Balance verification field work.
13	Governments written approval of PVT field work for all systems.
14	Facility acceptance recommendation.
15	Submission, review, and approval of Control Contractors PVT Report.
16	Submission, review, and approval of Equipment Suppliers PVT Report.
17	Conduct endurance testing within 10 months of beneficial occupancy.
18	Submission, review, and approval of endurance testing within 10 months of beneficial occupancy.
19	Conduct PVT field work within 10 months of beneficial occupancy.

3.5.4.1 PVT Testing for Multi-Phase Construction

For air moving systems except outside air systems serving multiple phases, all major activities listed in TABLE II through Government’s verbal approval of Test and Balance verification field work can be completed by phase if all ductwork construction is completed for that phase.

For primary systems such as chilled water systems, HVAC heating hot water systems, and outside air systems serving multiple phases, all major activities listed listed in TABLE II through Government’s verbal approval of Test and Balance verification field work for all air moving systems served by that primary system for that phase must be completed prior to conducting PVT field work for that primary system.

3.5.5 Control Contractor's Performance Verification Testing Plan

Submit a detailed PVT Plan of the proposed control systems testing in this contract for approval prior to its use. Develop and use a single PVT Plan for each system with a unique control sequence. Systems sharing an identical control sequence can be tested using copies of the PVT Plan intended for these systems.

PVT Plans must include system-based, step-by-step test methods demonstrating system performs in accordance with contract document requirements. The Government may provide sample PVT Plans upon request. PVT Plans must include the following:

a. Control sequences from contract documents segmented such that each control algorithm, operation mode, and alarm condition is immediately followed by numbered test methods required to initiate a response, expected response, space for comments, and “pass" or "fail” indication for each expected response.

b. PVT Plans with control sequences from contract documents that are not segmented into parts will not be accepted.

c. Indication where assisting personnel are required such as Mechanical Contractor.

d. Signature and date lines for the Contractor's PVT administrator, Contractor's quality assurance representative, and Contracting Officer's representative acknowledging completion of testing.

3.5.6 Performance Verification Testing Sample Size

PVT testing sample sizes will be as follows:

a. 100-Percent of the following systems:

(1) primary systems including, but not limited to, chilled water and HVAC heating hot water systems

(2) air handling unit systems including all associated fans except for remote exhaust air fans

(3) DOAS’s including all associated fans except for remote exhaust air fans

b. 20-Percent of each set of systems with a shared identical control sequence for systems such as:

(1) air terminal units

(2) exhaust air fans

(3) terminal equipment such as fan coil units and unit heaters

3.5.6.1 Selection of Systems to Test

For sample sets less than 100-percent, the Government will choose which systems will be tested. The Government may require additional testing if previous testing results are inconsistent or demonstrate improper system control as follows:

a. An additional 25-percent after five-percent failure rate of first sample set.

b. 100-percent after any failures occurring in additional sample set.

3.5.7 Conducting Performance Verification Testing

At least 15 days prior to preferred test date, request the Contracting Officer to allow the beginning of Government-witnessed PVT testing. Provide an estimated time table required to perform testing of each system. Furnish personnel, equipment, instrumentation, and supplies necessary to perform all aspects of testing. Testing personnel must be regularly employed in the testing and calibration of control systems. After receipt of Contracting Officer’s approval to begin testing, perform PVT testing using project's as-built (shop) control system drawings, project's design drawings, and approved PVT Plans.

During testing, identify deficiencies that do not meet contract document requirements. Deficiencies must be investigated, corrected with corrections documented, and re-tested at a later date following procedures

for the initial PVT testing. The Government may require re-testing of any control system components affected by the original failed test.

3.5.8 Endurance Testing

3.5.8.1 General

Conduct endurance testing for each system subject to PVT testing beginning when indicated in “Sequencing of Performance Verification Testing Activities”. Systems must be operating as normally anticipated during occupancy throughout endurance testing.

3.5.8.2 Hardware

Use hardware provided in this contract for testing.

If insufficient buffer capacity exists to trend the entire endurance test, upload trend data during the course of endurance testing to ensure all trend data is retained. Lost trend data will require retesting of all control points for affected system(s).

3.5.8.3 Endurance Testing Results Format

Submit endurance testing results for each tested system in a graphical format complete with clear indication of value(s) for y-axis, value for x-axis, and legend identifying each trended control point. The number of control points contained on a single graph must be such that all control points can be clearly visible. Control points must be logically grouped such that related points appear on a single graph. In addition, submit a separate comma separated value (CSV) file of raw trend data for each trended system. Each trended control point in CSV file must be clearly identified.

For control points recorded based on change of value, change of value for recording data must be clearly identified for each control point.

3.5.8.4 Endurance Testing Start, Duration, and Frequency

Trending of all control points for a given system must start at an identical date and time regardless of the basis of data collection. Duration of all endurance tests must be at least one-week.

Unless specified otherwise for control points recorded based on time, frequency of data collection must be 15-minutes. Frequency of data collection for specific types of control points is as follows:

3.5.8.4.1 Points Trended at One Minute Intervals

a. Temperature for supply air, return air, mixed air, supply water, and return water

b. Temperature for outside air, supply air, return air and exhaust air entering and leaving energy recovery device

c. Flow for supply air, return air, outside air, chilled water, and HVAC heating hot water

d. Flow for exhaust air associated with energy recovery

e. Relative humidity for outside air and return air

f. Relative humidity for outside air, supply air, return air and exhaust air entering and leaving energy recovery device

g. Command and status for control dampers and control valves

h. Speed for fans and pumps

i. Pressure for fans and pumps

3.5.8.4.2 Points Trended at 15 Minute Intervals

a. Temperature and relative humidity for zones

b. Temperature and relative humidity for outside air not associated with energy recovery

c. Command and status for equipment

d. Pressure relative to the outside for facility

3.5.8.5 Trended Control Points

Trended control points for each system must demonstrate each system performs in accordance with contract document requirements. Trended control points must include, but not be limited to, control points listed in contract document points list.

Minimum control points that are required to be trended for selected systems are listed below. These control points must be trended as applicable to this contract in addition to control points necessary to demonstrate systems perform in accordance with contract document requirements and those listed in contract document’s points list.

3.5.8.5.1 Air-Cooled Chiller Chilled Water System.

a. Chiller(s) command and status

b. Chiller isolation valve(s) command and status

c. Chilled water pump(s) actual speed

d. Chilled water pump(s) setpoint and actual differential pressure

e. Minimum flow bypass control valve command

f. Minimum system flow setpoint and actual flow

g. Chilled water supply setpoint and actual temperature

h. Chilled water return actual temperature

i. Chilled water actual flow

j. Outside air actual dry-bulb temperature

3.5.8.5.2 HVAC Heating Hot Water System with Boiler.

a. Boiler(s) command and status

b. Boiler(s) isolation valve command and status

c. HVAC heating hot water pump(s) actual speed

d. HVAC heating hot water pump(s) setpoint and actual differential pressure

e. Minimum flow bypass control valve command

f. Minimum system setpoint and actual flow

g. HVAC heating hot water supply setpoint and actual temperature

h. HVAC heating hot water return actual temperature

i. HVAC heating hot water actual flow

j. Outside air actual dry-bulb temperature

3.5.8.5.3 Air Handling Unit with Relief Air Fan

a. Outside air actual dry-bulb temperature

b. Outside air actual relative humidity

c. Outside air setpoint and actual airflow

d. Minimum outside air control damper command

e. Economizer outside air control damper command

f. Facility setpoint and actual relative pressure

g. Return air actual dry-bulb temperature

h. Return air actual relative humidity

i. Return air control damper command

j. Relief air control damper command

h. Relief air fan actual speed

i. Mixed air setpoint and setpoint and actual temperature

j. Preheat coil leaving air setpoint and actual temperature

k. Preheat coil control actuator command

l. Cooling coil leaving air setpoint and actual temperature

m. Cooling coil control valve command

n. Supply air fan actual speed

o. Discharge air actual temperature

p. Supply air fan setpoint and actual static pressure

3.5.8.5.4 Dedicated Outside Air System (DOAS)

a. Outside air actual dry-bulb temperature

b. Outside air actual relative humidity

c. Outside air isolation damper command and status

d. Outside air setpoint and actual airflow

e. Energy recovery wheel command, status, and actual speed

f. Energy recovery wheel’s OA bypass control damper command and status

g. Energy recovery wheel’s defrost cycle command and status

h. Energy recovery wheel’s OA discharge air actual dry-bulb temperature

i. Energy recovery wheel’s OA discharge air actual relative humidity

j. Preheat coil leaving air setpoint and actual temperature

h. Preheat coil control actuator command

i. Cooling coil leaving air setpoint and actual temperature

j. Cooling coil control valve command

k. Supply air fan actual speed

l. Reheat coil control valve command

m. Discharge air setpoint and actual temperature

n. Supply air fan setpoint and actual static pressure

o. Facility setpoint and actual relative pressure

p. Return air actual dry-bulb temperature

q. Return air actual relative humidity

r. Energy recovery wheel’s EA bypass control damper command and status

s. Energy recovery wheel’s EA discharge air actual dry-bulb temperature

t. Energy recovery wheel’s EA discharge air actual relative humidity

u. Exhaust air fan actual speed

v. Exhaust air isolation damper command and status

3.5.8.5.5 Series Fan-Powered Supply Air Terminal Units

a. Zone setpoint and actual dry-bulb temperature

b. Zone actual relative humidity

c. Control damper command

d. Fan command and status

e. Heating coil valve command

f. Airflow actual value

g. Leaving air actual temperature

3.5.8.6 Endurance Testing Sample Size

Endurance Testing sample sizes ware as follows:

a. 100-Percent of the following systems:

(1) primary systems including, but not limited to, chilled water and HVAC heating hot water systems

(2) air handling unit systems including all associated fans except for remote exhaust air fans

(3) DOAS’s including all associated fans except for remote exhaust air fans

b. 25-Percent of each set of systems with a shared identical control sequence for systems such as:

(1) air terminal units

(2) exhaust air fans

(3) terminal equipment such as fan coil units and unit heaters

3.5.8.6.1 Selection of Systems to Test

For sample sets less than 100-percent, the Government will choose which systems will be tested. The Government may require additional testing if previous testing results are inconsistent or demonstrate improper system control as follows:

a. An additional 25-percent after five-percent failure rate of first sample set.

b. 100-percent after any failures occurring in additional sample set.

3.5.9 Performance Verification Test Report

Submit a PVT Report after receiving Government’s written approval of PVT field work that is intended to document test results and final control system sequences and settings prior to turnover. The PVT Report must contain the following:

a. Executive summary that briefly discusses results of each system’s endurance testing and PVT testing and conclusions for each system.

b. Endurance testing for each system.

c. Completed PVT Plan for each system used during testing that includes hand written field notes and participant signatures.

d. Blank PVT Plan for each system approved prior to testing that is edited to reflect changes occurring during testing. Edits must be typed and must reflect changes to control sequences from contract documents, must reflect changes to numbered test methods required to initiate a response, and must reflect changes to expected response. Only one blank PVT Plan is required for each set of systems sharing an identical control sequence, such as air terminal units, exhaust air fans, fan coil units and unit heaters.

e. Written certification that the installation and testing of all systems are complete and meet all contract document requirements.

3.5.10 Bus Waveform Report

Provide printed wave form of the MS/TP bus(es). Use an oscilloscope to test and record the wave form of each bus. Provide testing voltage and timing in the report. Testing device is to run on battery during testing and not connected to building power source. This wave form is useful in identifying and troubleshooting bus problems such as inappropriate taps, grounds, end of line terminations and poor connections. Identify each graphic with bus name, location, date and time, and instrument used. Include the resistor sizes needed at each Bus End of Line (EOL). Include a list of the EOL devices. Inconsistant waveforms must be investigated and improved to ASHRAE 135 industry standard for MSTP Physical Layer.

3.5.11 Performance Verification Testing Acceptance Testing Season One

After acceptance of the PVT Report, demonstrate proper and stable operation of the DDC System. During the field acceptance testing, verify, in the presence of the COTR and BAS owner, random selections of sequences reported in the PVT Report. Equipment, controllers, devices, and sequences for field acceptance testing are to be selected by the COTR. As-built control drawings must be for use and verification at acceptance testing. Field acceptance testing includes verification of the PVT for the following equipment groups:

Group 1: All pumps, chillers, boilers, return fans, computer room units, and air handling units (rooftop and central stations).

Group 2: 25 percent of terminals such as VAV and fan coil units.

Group 3: 25 percent of supply fans, and exhaust fans.

If any of the acceptance testing is found to not operate correctly, terminate verification for the given group. Make the necessary corrections and prepare a revised PVT Report. Reschedule acceptance testing of the revised report with the COTR. After the PVT has been accepted, submit the revised controller files and BACnet Building Controller database.

3.5.12 Performance Verification Testing Acceptance Testing Season Two

A minimum of 3 months after initial acceptance of the DDC system and in the opposite season of heating or cooling, demonstrate proper and stable operation of the DDC system. During the field acceptance testing, verify, in the presence of the COTR and BAS owner, random selections of sequences

reported in the PCT Report. Equipment, controllers, devices, and sequences for field acceptance testing are to be selected by the COTR. Field acceptance testing includes verification of the PVT for the following equipment groups:

Group 1: All pumps, chillers, boilers, return fans, computer room units, and air handling units (rooftop and central stations).

Group 2: 25 percent of terminals such as VAV and fan coil units.

Group 3: 25 percent of supply fans, and exhaust fans.

If any of the acceptance testing is found to not operate correctly, terminate verification for the given group. Make the necessary corrections and prepare a revised PVT Report. Reschedule acceptance testing of the revised report with the COTR. After the PVT has been accepted, submit the revised controller files and BACnet Building Controller database.

3.6 OPERATION AND MAINTENANCE (O&M) INSTRUCTIONS

Provide Operation and maintenance data in accordance with Section 01 78 23 OPERATION AND MAINTENANCE DATA and 01 78 24.00 20 FACILITY ELECTRONIC OPERATION AND MAINTENANCE SUPPORT INFORMATION (eOMSI). Provide HVAC C ontrol System Operation and Maintenance Manuals which include:

a. "Data Package 3" as indicated in Section 01 78 23 OPERATION AND MAINTENANCE DATA for each piece of control equipment.

b. "Data Package 4" as described in Section 01 78 23 OPERATION AND MAINTENANCE DATA for all air compressors.

c. HVAC control system sequences of operation formatted as indicated.

d. Procedures for the HVAC system start-up, operation and shut-down including the manufacturer's supplied procedures for each piece of equipment, and procedures for the overall HVAC system.

e. As-built HVAC control system detail drawings formatted as indicated.

f. Routine maintenance checklist. Provide the routine maintenance checklist arranged in a columnar format, where the first column lists all installed devices, the second column states the maintenance activity or that no maintenance required, the third column states the frequency of the maintenance activity, and the fourth column is used for additional comments or reference.

g. Qualified service organization list, including at a minimum company name, contact name and phone number.

h. Start-Up Testing Report.

i. Performance Verification Test (PVT) Procedures and Report.

j. All updated field controller files and BACnet Building Controller database modified during the acceptance and warranty periods, or as a result of a latend defect.

k. A written statement entitled "software Updgrades" stating software and

firmware patches and updates will be provided upon request at no additional cost to the Governemnt for a minimum of two years from project acceptance. Include a table of all DDC system software and firmware provided under this contract, listing the original release dates, version numbers, part numbers, and serial numbers.

Submit 2 copies of the Operation and Maintenance Instructions, indexed and in booklet form. The Operation and Maintenance Instructions may be submitted as a Technical Data Package.

3.7 MAINTENANCE AND SERVICE

Provide services, materials and equipment as necessary to maintain the entire system in an operational state as indicated for a period of one year after successful completion and acceptance of the Performance Verification Test. Minimize impacts on facility operations.

a. The integration of the system specified in this section into a Utility Monitoring and Control System must not, of itself, void the warranty or otherwise alter the requirement for the one year maintenance and service period. Integration into a UMCS includes but is not limited to establishing communication between devices in the control system and the front end or devices in another system.

b. The changing of configuration properties must not, of itself, void the warranty or otherwise alter the requirement for the one year maintenance and service period.

3.7.1 Description of Work

Provide adjustment and repair of the system including the manufacturer's required sensor and actuator (including transducer) calibration, span and range adjustment.

3.7.2 Personnel

Use only service personnel qualified to accomplish work promptly and satisfactorily. Advise the Government in writing of the name of the designated service representative, and of any changes in personnel.

3.7.3 Scheduled Inspections

Perform two inspections at six-month intervals and provide work required. Perform inspections in January and July. During each inspection perform the indicated tasks:

a. Perform visual checks and operational tests of equipment.

b. Clean control system equipment including interior and exterior surfaces.

c. Check and calibrate each field device. Check and calibrate 50 percent of the total analog inputs and outputs during the first inspection. Check and calibrate the remaining 50 percent of the analog inputs and outputs during the second major inspection. Certify analog test instrumentation accuracy to be twice the specified accuracy of the device being calibrated. Randomly check at least 25 percent of all binary inputs and outputs for proper operation during the first inspection. Randomly check at least 25 percent of the remaining

binary inputs and outputs during the second inspection. If more than 20 percent of checked inputs or outputs failed the calibration check during any inspection, check and recalibrate all inputs and outputs during that inspection.

d. Run system software diagnostics and correct diagnosed problems.

e. Resolve any previous outstanding problems.

3.7.4 Scheduled Work

This work must be performed during regular working hours, Monday through Friday, excluding Federal holidays.

3.7.5 Emergency Service

The Government will initiate service calls when the system is not functioning properly. Qualified personnel must be available to provide service to the system. A telephone number where the service supervisor can be reached at all times must be provided. Service personnel must be at the site within 24 hours after receiving a request for service. The control system must be restored to proper operating condition as required per Section 01 78 00 CLOSEOUT SUBMITTALS.

3.7.6 Operation

After performing scheduled adjustments and repairs, verify control system operation as demonstrated by the applicable tests of the performance verification test.

3.7.7 Records and Logs

Keep dated records and logs of each task, with cumulative records for each major component, and for the complete system chronologically. Maintain a continuous log for all devices, including initial analog span and zero calibration values and digital points. Keep complete logs and provide logs for inspection onsite, demonstrating that planned and systematic adjustments and repairs have been accomplished for the control system.

3.7.8 Work Requests

Record each service call request as received and include its location, date and time the call was received, nature of trouble, names of the service personnel assigned to the task, instructions describing what has to be done, the amount and nature of the materials to be used, the time and date work started, and the time and date of completion. Submit a record of the work performed within 5 days after work is accomplished.

3.7.9 System Modifications

Submit recommendations for system modification in writing. Do not make system modifications, including operating parameters and control settings, without prior approval of the Government.

]3.8 TRAINING

Conduct a training course for 4 operating staff members designated by the Government in the maintenance and operation of the system, including specified hardware and software. Conduct 8 hours of training at the

project site within 30 days after successful completion of the performance verification test. The Government reserves the right to make audio and visual recordings (using Government supplied equipment)of the training sessions for later use. Provide audiovisual equipment and other training materials and supplies required to conduct training. A training day is defined as 8 hours of classroom instruction, including two 15 minute breaks and excluding lunchtime, Monday through Friday, during the daytime shift in effect at the training facility.

3.8.1 Training Documentation

Prepare training documentation consisting of:

a. Course Attendee List: Develop the list of course attendees in coordination with and signed by the ControlsHVAC shop supervisor.

b. Training Manuals: Provide training manuals which include an agenda, defined objectives for each lesson, and a detailed description of the subject matter for each lesson. When presenting portions of the course material by audiovisuals, deliver copies of those audiovisuals as a part of the printed training manuals. As-Built control drawings must be used for training.

3.8.2 Training Course Content

For guidance in planning the required instruction, assume that attendees will have a high school education, and are familiar with HVAC systems. During the training course, cover all of the material contained in the Operating and Maintenance Instructions, the layout and location of each controller enclosure, the layout of one of each type of equipment and the locations of each, the location of each control device external to the panels, the location of the compressed air station, preventive maintenance, troubleshooting, diagnostics, calibration, adjustment, commissioning, tuning, and repair procedures. Typical systems and similar systems may be treated as a group, with instruction on the physical layout of one such system. Present the results of the performance verification test and the Start-Up Testing Report as benchmarks of HVAC control system performance by which to measure operation and maintenance effectiveness.

3.8.3 Training Documentation Submittal Requirements

Submit hardcopy training manuals and all training materials on CD-ROM. Provide one hardcopy manual for each trainee on the Course Attendee List and 2 additional copies for archive at the project site. Provide 2 copies of the Course Attendee List with the archival copies. Training Documentation may be submitted as a Technical Data Package.

APPENDIX A

QC CHECKLIST FOR NIAGARA FRAMEWORK BASED BACNET SYSTEMS		
This checklist is not all-inclusive of the requirements of this specification and should not be interpreted as such. Instructions: Initial each item in the space provided (|____|) verifying that the requirement has been met.		
This checklist is for (circle one:) Pre-Construction QC Checklist Submittal Post-Construction QC Checklist Submittal Close-out QC Checklist Submittal		
Items verified for Pre-Construction, Post-Construction and Closeout QC Checklist Submittals:		
1	All DDC Hardware is numbered on Control System Schematic Drawings.	|____|
2	Signal lines on Control System Schematic are labeled with the signal type.	|____|
3	Local Display Panel (LDP) Locations are shown on Control System Schematic drawings.	|____|
Items verified for Post-Construction and Closeout QC Checklist Submittals:		
4	All sequences are performed as specified using DDC Hardware.	|____|
5	Training schedule and course attendee list has been developed and coordinated with shops and submitted.	|____|
Items verified for Closeout QC Checklist Submittal:		
6	Final As-built Drawings, including all Points Schedule drawings, accurately represent the final installed system.	|____|
7	Programming software has been submitted for all programmable controllers.	|____|
8	All software has been licensed to the Government.	

QC CHECKLIST FOR NIAGARA FRAMEWORK BASED BACNET SYSTEMS		
9	O&M Instructions have been completed and submitted.	|____|
10	Training course has been completed.	|____|
11	All DDC Hardware is installed on a BACnet ASHRAE 135 network using either MS/TP in accordance with Clause 9 or IP in accordance with Annex J.	|____|
12	All DDC Hardware is BTL listed.	|____|
13	Communication between DDC Hardware is only via BACnet using standard services, except as specifically permitted by the specification. Non-standard services have been fully documented in the DDC Hardware Schedule.	|____|
14	Scheduling, Alarming, and Trending have been implemented using Niagara Framework objects and services, and BACnet Instrinsic Alarming as indicated.	|____|
15	All Properties indicated as required to be Writable are Writable and Overrides have been provided as indicated	|____|
_____ _____		
	(QC Representative Signature) (Date)	

-- End of Section --

THIS PAGE HAS BEEN INTENTIONALLY LEFT BLANK

SECTION 23 09 13.00 22

INSTRUMENTATION AND CONTROL DEVICES FOR HVAC
11/19

PART 1 GENERAL

1.1 SUMMARY

This section provides for the instrumentation control system components excluding direct digital controllers, network controllers, gateways etc. that are necessary for a completely functional automatic control system. When combined with a Direct Digital Control (DDC) system, the Instrumentation and Control Devices covered under this section must be a complete system suitable for the control of the heating, ventilating and air conditioning (HVAC) and other building-level systems as specified and indicated.

a. Install hardware to perform the control sequences as specified and indicated and to provide control of the equipment as specified and indicated.

b. Install hardware such that individual control equipment can be replaced by similar control equipment from other equipment manufacturers with no loss of system functionality.

c. Install and configure hardware such that the Government or their agents are able to perform repair, replacement, and upgrades of individual hardware without further interaction with the installing Contractor.

1.1.1 Verification of Dimensions

After becoming familiar with all details of the work, verify all dimensions in the field, and advise the Contracting Officer of any discrepancy before performing any work.

1.1.2 Drawings

The Government will not indicate all offsets, fittings, and accessories that may be required on the drawings. Carefully investigate the mechanical, electrical, and finish conditions that could affect the work to be performed, arrange such work accordingly, and provide all work necessary to meet such conditions.

1.2 RELATED SECTIONS

Related work specified elsewhere.

Section 01 30 00 ADMINISTRATIVE REQUIREMENTS

Section 23 00 00 AIR SUPPLY, DISTRIBUTION, VENTILATION, AND EXHAUST SYSTEMS

Section 23 09 00.00 22 INSTRUMENTATION AND CONTROL FOR HVAC

Section 26 20 00 INTERIOR DISTRIBUTION SYSTEM

1.3 REFERENCES

The publications listed below form a part of this specification to the extent referenced. The publications are referred to within the text by the basic designation only.

AIR MOVEMENT AND CONTROL ASSOCIATION INTERNATIONAL, INC. (AMCA)

AMCA 500-D	(2018) Laboratory Methods of Testing Dampers for Rating
AMCA 511	(2010) Certified Ratings Program for Air Control Devices

AMERICAN NATIONAL STANDARDS INSTITUTE (ANSI)

ANSI C12.1	((2014; Errata 2016) Electric Meters - Code for Electricity Metering

INSTITUTE OF ELECTRICAL AND ELECTRONICS ENGINEERS (IEEE)

IEEE 142	(2007; Errata 2014) Recommended Practice for Grounding of Industrial and Commercial Power Systems - IEEE Green Book

NATIONAL ELECTRICAL MANUFACTURERS ASSOCIATION (NEMA)

ANSI C12.20	(2015; E 2018) Electricity Meters - 0.1, 0.2, and 0.5 Accuracy Classes
NEMA/ANSI C12.10	(2011) Physical Aspects of Watthour Meters - Safety Standards

NATIONAL FIRE PROTECTION ASSOCIATION (NFPA)

NFPA 70	(2017; ERTA 1-2 2017; TIA 17-1; TIA 17-2; TIA 17-3; TIA 17-4; TIA 17-5; TIA 17-6; TIA 17-7; TIA 17-8; TIA 17-9; TIA 17-10; TIA 17-11; TIA 17-12; TIA 17-13; TIA 17-14; TIA 17-15; TIA 17-16; TIA 17-17) National Electrical Code
NFPA 90A	(2018) Standard for the Installation of Air Conditioning and Ventilating Systems

UNDERWRITERS LABORATORIES (UL)

UL 5085-3	(2006; Reprint Nov 20121) Low Voltage Transformers - Part 3: Class 2 and Class 3 Transformers

1.4 SUBMITTALS

Submittal requirements are specified in Section 23 09 00.00 22 INSTRUMENTATION AND CONTROL FOR HVAC.

1.5 DELIVERY AND STORAGE

Store and protect products from the weather, humidity, and temperature variations, dirt and dust, and other contaminants, within the storage

condition limits published by the equipment manufacturer.

1.6 INPUT MEASUREMENT ACCURACY

Select, install and configure sensors, transmitters and DDC Hardware such that the maximum error of the measured value at the input of the DDC hardware is less than the maximum allowable error specified for the sensor or instrumentation.

1.7 SUBCONTRACTOR SPECIAL REQUIREMENTS

Perform all work in this section in accordance with the paragraph entitled CONTRACTOR SPECIAL REQUIREMENTS in Section 01 30 00 ADMINISTRATIVE REQUIREMENTS.

PART 2 PRODUCTS

2.1 EQUIPMENT

2.1.1 General Requirements

All products used to meet this specification must meet the indicated requirements, but not all products specified here will be required by every project. All products must meet the requirements both Section 23 09 00.00 22 INSTRUMENTATION AND CONTROL FOR HVAC and this Section.

2.1.2 Operation Environment Requirements

Unless otherwise specified, provide products rated for continuous operation under the following conditions:

2.1.2.1 Pressure

Pressure conditions normally encountered in the installed location.

2.1.2.2 Vibration

Vibration conditions normally encountered in the installed location.

2.1.2.3 Temperature

a. Products installed indoors: Ambient temperatures in the range of 32 to 112 degrees F and temperature conditions outside this range normally encountered at the installed location.

b. Products installed outdoors or in unconditioned indoor spaces: Ambient temperatures in the range of -35 to +151 degrees F and temperature conditions outside this range normally encountered at the installed location.

2.1.2.4 Humidity

10 to 95 percent relative humidity, non-condensing and also humidity conditions outside this range normally encountered at the installed location.

2.2 WEATHERSHIELDS

Provide weathershields constructed of galvanized steel painted white,

unpainted aluminum, aluminum painted white, or white PVC.

2.3 WIRE AND CABLE

Provide wire and cable meeting the requirements of NFPA 70 and NFPA 90A in addition to the requirements of this specification and referenced specifications.

2.3.1 Terminal Blocks

For terminal blocks which are not integral to other equipment, provide terminal blocks which are insulated, modular, feed-through, clamp style with recessed captive screw-type clamping mechanism, suitable for DIN rail mounting, and which have enclosed sides or end plates and partition plates for separation.

2.3.2 Control Wiring for Binary Signals

For Control Wiring for Binary Signals, provide 18 AWG copper or thicker wire rated for 300-volt service.

2.3.3 Control Wiring for Analog Signals

For Control Wiring for Analog Signals, provide 18 AWG or thicker, copper, single- or multiple-twisted wire meeting the following requirements:

a. Minimum 2 inch lay of twist.

b. 100 percent shielded pairs.

c. At least 300-volt insulation.

d. Each pair has a 20 AWG tinned-copper drain wire and individual overall pair insulation.

e. Cables have an overall aluminum-polyester or tinned-copper cable-shield tape, overall 20 AWG tinned-copper cable drain wire, and overall cable insulation.

2.3.4 Power Wiring for Control Devices

For 24-volt circuits, provide insulated copper 18 AWG or thicker wire rated for 300 VAC service. For 120-volt circuits, provide 14 AWG or thicker stranded copper wire rated for 600-volt service.

2.3.5 Transformers

Provide UL 5085-3 approved transformers. Select transformers sized so that the connected load is no greater than 80 percent of the transformer rated capacity.

2.4 DAMPERS

2.4.1 Damper Assembly

Provide single damper sections with blades no longer than 48 inches and which are no higher than 72 inches and damper blade width of 8 inches or less. When larger sizes are required, combine damper sections. Provide opposed blade dampers for rectangular applications 10 inches and taller.

Provide single blade dampers for round dampers and rectangular dampers less than 10 inches. Provide dampers made of steel, or other materials where indicated and with assembly frames constructed of 0.07 inch minimum thickness [galvanized][stainless][aluminum] steel channels with mitered and welded corners. Steel channel frames constructed of 0.06 inch minimum thickness are acceptable provided the corners are reinforced.

a. Flat blades must be made rigid by folding the edges. Blade-operating linkages must be within the frame so that blade-connecting devices within the same damper section must not be located directly in the air stream.

b. Damper axles must be 1/2 inch minimum, plated steel rods supported in the damper frame by stainless steel or bronze bearings. Blades mounted vertically must be supported by thrust bearings.

c. Provide dampers which do not exceed a pressure drop through the damper of 0.04 inches water gauge at 1000 ft/min in the wide-open position. Provide dampers with frames not less than 2 inch in width. Provide dampers which have been tested in accordance with AMCA 500-D.

2.4.2 Operating Linkages

For operating links external to dampers, such as crank arms, connecting rods, and line shafting for transmitting motion from damper actuators to dampers, provide links able to withstand a load equal to at least 300 percent of the maximum required damper-operating force without deforming. Rod lengths must be adjustable. Links must be brass, bronze, zinc-coated steel, or stainless steel. Working parts of joints and clevises must be brass, bronze, or stainless steel. Adjustments of crank arms must control the open and closed positions of dampers.

2.4.3 Damper Types

2.4.3.1 Flow Control Dampers

Provide opposed blade type dampers for outside air, return air, relief air, exhaust, face and bypass dampers as indicated on the Damper Schedule. Blades must have interlocking edges. The channel frames of the dampers must be provided with jamb seals to minimize air leakage. Unless otherwise indicated, dampers must meet AMCA 511 Class 1A requirements. Outside air damper seals must be suitable for an operating temperature range of -40 to +167 degrees F. Dampers must be rated at not less than 2000 ft/min air velocity.

2.4.3.2 Mechanical Rooms and Other Utility Space Ventilation Dampers

Provide utility space ventilation dampers as indicated. Unless otherwise indicated provide AMCA 511 class 3 dampers. Provide dampers rated at not less than 1500 ft/min air velocity.

2.5 SENSORS AND INSTRUMENTATION

Unless otherwise specified, provide sensors and instrumentation which incorporate an integral transmitter. Sensors and instrumentation, including their transmitters, must meet the specified accuracy and drift requirements at the input of the connected DDC Hardware's analog-to-digital conversion.

2.5.1 Analog and Binary Transmitters

Provide transmitters which match the characteristics of the sensor. Transmitters providing analog values must produce a linear 4-20 mAdc, 0-10 Vdc signal corresponding to the required operating range and must have zero and span adjustment. Transmitters providing binary values must have dry contacts rated at 1A at 24 Volts AC.

2.5.2 Network Transmitters

Sensors and Instrumentation incorporating an integral network connection are considered DDC Hardware and must meet the DDC Hardware requirements of 23 09 23.02 22 BACNET DIRECT DIGITAL CONTROL FOR HVAC AND OTHER BUILDING CONTROL SYSTEMS when used in a BACnet network.

2.5.3 Temperature Sensors

Provide the same sensor type throughout the project. Temperature sensors may be provided without transmitters. Where transmitters are used, the range must be the smallest available from the manufacturer and suitable for the application such that the range encompasses the expected range of temperatures to be measured. The end to end accuracy includes the combined effect of sensitivity, hysteresis, linearity and repeatability between the measured variable and the end user interface (graphic presentation) including transmitters if used.

2.5.3.1 Sensor Accuracy and Stability of Control

2.5.3.1.1 Conditioned Space Temperature

Plus or minus 0.5 degree F over the operating range.

2.5.3.1.2 Unconditioned Space Temperature

a. Plus or minus 1 degree F over the range of 30 to 131 degrees F AND

b. Plus or minus 4 degrees F over the rest of the operating range.

2.5.3.1.3 Duct Temperature

Plus or minus 0.5 degree F

2.5.3.1.4 Outside Air Temperature

a. Plus or minus 2 degrees F over the range of -30 to +130 degrees F AND

b. Plus or minus 1 degree F over the range of 30 to 130 degrees F.

2.5.3.2 Transmitter Drift

The maximum allowable transmitter drift: 0.25 degrees F per year.

2.5.3.3 Point Temperature Sensors

Point Sensors must be encapsulated in epoxy, series 300 stainless steel, anodized aluminum, or copper.

2.5.3.4 Temperature Sensor Details

2.5.3.4.1 Room Type

Provide the sensing element components within a decorative protective cover suitable for surrounding decor.

2.5.3.4.2 Duct Probe Type

Ensure the probe is long enough to properly sense the air stream temperature.

2.5.3.4.3 Duct Averaging Type

Continuous averaging sensors must be one foot in length for each 1 square foot of duct cross-sectional area, and a minimum length of 5 feet.

2.5.3.4.4 Outside Air Type

Provide the sensing element rated for outdoor use

2.5.4 Relative Humidity Sensor

Relative humidity sensors must use bulk polymer resistive or thin film capacitive type non-saturating sensing elements capable of withstanding a saturated condition without permanently affecting calibration or sustaining damage. The sensors must include removable protective membrane filters. Where required for exterior installation, sensors must be capable of surviving below freezing temperatures and direct contact with moisture without affecting sensor calibration. When used indoors, the sensor must be capable of being exposed to a condensing air stream (100 percent relative humidity) with no adverse effect to the sensor's calibration or other harm to the instrument. The sensor must be of the wall-mounted or duct-mounted type, as required by the application, and must be provided with any required accessories. Sensors used in duct high-limit applications must have a bulk polymer resistive sensing element. Duct-mounted sensors must be provided with a duct probe designed to protect the sensing element from dust accumulation and mechanical damage. Relative humidity (RH) sensors must measure relative humidity over a range of 0 percent to 100 percent with an accuracy of plus or minus [2][3] percent. RH sensors must function over a temperature range of 40 to 135 degrees F and must not drift more than 1 percent per year.

2.5.5 Carbon Dioxide (CO2) Sensors

Provide photometric type CO2 sensors with integral transducers and linear output. Carbon dioxide (CO2) sensors must measure CO2 concentrations between 0 to 2000 parts per million (ppm) using non-dispersible infrared (NDIR) technology with an accuracy of plus or minus 50 ppm and a maximum response time of 1 minute. The sensor must be rated for operation at ambient air temperatures within the range of 32 to 122 degrees F and relative humidity within the range of 20 to 95 percent (non-condensing). The sensor must have a maximum drift of 2 percent per year. The sensor chamber must be manufactured with a non-corrosive material that does not affect carbon dioxide sample concentration. Duct mounted sensors must be provided with a duct probe designed to protect the sensing element from dust accumulation and mechanical damage. The sensor must have a calibration interval no less than 5 years.

2.5.6 Differential Pressure Instrumentation

2.5.6.1 Differential Pressure Sensors

Provide Differential Pressure Sensors with ranges as indicated or as required for the application. Pressure sensor ranges must not exceed the high end range indicated on the Points Schedule by more than 50 percent. The over pressure rating must be a minimum of 150 percent of the highest design pressure of either input to the sensor. The accuracy must be plus or minus 1 percent of full scale. The sensor must have a maximum drift of 2 percent per year

2.5.6.2 Differential Pressure Switch

Provide differential pressure switches with a user-adjustable setpoint which are sized for the application such that the setpoint is between 25 percent and 75 percent of the full range. The over pressure rating must be a minimum of 150 percent of the highest design pressure of either input to the sensor. The switch must have two sets of contacts and each contact must have a rating greater than it's connected load. Contacts must open or close upon rise of pressure above the setpoint or drop of pressure below the setpoint as indicated.

2.5.7 Flow Sensors

2.5.7.1 Airflow Measurement Array (AFMA)

2.5.7.1.1 Airflow Straightener

Provide AFMAs which contain an airflow straightener if required by the AFMA manufacturer's published installation instructions. The straightener must be contained inside a flanged sheet metal casing, with the AFMA located as specified according to the published recommendation of the AFMA manufacturer. In the absence of published documentation, provide airflow straighteners if there is any duct obstruction within 5 duct diameters upstream of the AFMA. Air-flow straighteners, where required, must be constructed of 0.125 inch aluminum honeycomb and the depth of the straightener must not be less than 1.5 inches.

2.5.7.1.2 Resistance to Airflow

The resistance to air flow through the AFMA, including the airflow straightener must not exceed 0.085 inch water gauge at an airflow of 2,000 fpm. AFMA construction must be suitable for operation at airflows of up to 5000 fpm over a temperature range of 40 to 120 degrees F.

2.5.7.1.3 Outside Air Temperature

In outside air measurement or in low-temperature air delivery applications, provide an AFMA certified by the manufacturer to be accurate as specified over a temperature range of -20 to +120 degrees F .

2.5.7.1.4 Pitot Tube AFMA

Each Pitot Tube AFMA must contain an array of velocity sensing elements. The velocity sensing elements must be of the multiple pitot tube type with averaging manifolds. The sensing elements must be distributed across the duct cross section in the quantity and pattern specified or recommended by the published installation instructions of the AFMA manufacturer.

a. Pitot Tube AFMAs for use in airflows over 600 fpm must have an

accuracy of plus or minus 5 percent over a range of 500 to 2500 fpm.

b. Pitot Tube AFMAs for use in airflows under 600 fpm must have an accuracy of plus or minus 5 percent over a range of 125 to 2500 fpm.

2.5.7.1.5 Electronic AFMA

Each electronic AFMA must consist of an array of velocity sensing elements of the resistance temperature detector (RTD) or thermistor type. The sensing elements must be distributed across the duct cross section in the quantity and pattern specified or recommended by the published application data of the AFMA manufacturer. Electronic AFMAs must have an accuracy of plus or minus 5 percent over a range of 125 to 5,000 fpm and the output must be temperature compensated over a range of 32 to 212 degrees F.

2.5.7.1.6 Fan Inlet Measurement Devices

Fan inlet measurement devices cannot be used unless indicated on the drawings or schedules.

2.5.7.2 Annular Pitot Tube

Annular pitot tube must be made of austenitic stainless steel with an accuracy of plus or minus 2 percent of full flow and a repeatability of plus or minus 0.5 percent of measured value. The unit must have at least one static port and no less than four total head pressure ports with an averaging manifold.

2.5.8 Electrical Instruments

Provide Electrical Instruments with an input range as indicated or sized for the application. Unless otherwise specified, AC instrumentation must be suitable for 60 Hz operation.

2.5.8.1 Current Transducers

Current transducers must accept an AC current input and must have an accuracy of plus or minus 2 percent of full scale. The device must have a means for calibration. Current transducers for variable frequency applications must be rated for variable frequency operation.

2.5.8.2 Current Sensing Relays (CSRs)

Current sensing relays (CSRs) must provide a normally-open contact with a voltage and amperage rating greater than its connected load. Current sensing relays must be of split-core design. The CSR must be rated for operation at 200 percent of the connected load. Voltage isolation must be a minimum of 600 volts. The CSR must auto-calibrate to the connected load or be adjustable and field calibrated. Current sensors for variable frequency applications must be rated for variable frequency operation.

2.5.8.3 Voltage Transducers

Voltage transducers must accept an AC voltage input and have an accuracy of plus or minus 0.25 percent of full scale. The device must have a means for calibration. Line side fuses for transducer protection must be provided.

2.5.8.4 Energy Metering

2.5.8.4.1 Watt or Watthour Transducers

Watt transducers must measure voltage and current and must output kW or kWh or both kW and kWh as indicated. kW outputs must have an accuracy of plus or minus 0.5 percent over a power factor range of 0.1 to 1. kWh outputs must have an accuracy of plus or minus 0.5 percent over a power factor range of 0.1 to 1.

2.5.8.4.2 Watthour Revenue Meter (with and without Demand Register)

All Watthour revenue meters must measure voltage and current and must be in accordance with ANSI C12.1 with an ANSI C12.20 Accuracy class of [0.5] [0.2] and must have pulse initiators for remote monitoring of Watthour consumption. Pulse initiators must consist of form C contacts with a current rating not to exceed two amperes and voltage not to exceed 500 V, with combinations of VA not to exceed 100 VA, and a life rating of one billion operations. Meter sockets must be in accordance with NEMA/ANSI C12.10. Watthour revenue meters with demand registers must output instantaneous demand in addition to the pulse initiators.

2.5.9 Occupancy Sensors

Occupancy sensors must have occupancy-sensing sensitivity adjustment and an adjustable off-delay timer with a setpoint of 15 minutes. Adjustments accessible from the face of the unit are preferred. Occupancy sensors must be rated for operation in ambient air temperatures ranging from 40 to 95 degrees F or temperatures normally encountered in the installed location. Sensors integral to wall mount on-off light switches must have an auto-off switch. Wall switch sensors must be decorator style and must fit behind a standard decorator type wall plate. All occupancy sensors, power packs, and slave packs must be UL listed. In addition to any outputs required for lighting control, the occupancy sensor must provide an output for the HVAC control system.

2.5.9.1 Passive Infrared (PIR) Occupancy Sensors

PIR occupancy sensors must have a multi-level, multi-segmented viewing lens and a conical field of view with a viewing angle of 180 degrees and a detection of at least 20 feet unless otherwise indicated or specified. PIR Sensors must provide field-adjustable background light-level adjustment with an adjustment range suitable to the light level in the sensed area, room or space. PIR sensors must be immune to false triggering from RFI and EMI.

2.5.9.2 Ultrasonic Occupancy Sensors

Ultrasonic sensors must operate at a minimum frequency 32 kHz and must be designed to not interfere with hearing aids.

2.5.9.3 Dual-Technology Occupancy Sensor (PIR and Ultrasonic)

Dual-Technology Occupancy Sensors must meet the requirements of both PIR and Ultrasonic Occupancy Sensors.

2.5.10 Vibration Switch

Vibration switch must be solid state, enclosed in a NEMA 250 Type 4 or Type 4X housing with sealed wire entry. Unit must have two independent

sets of Form C switch contacts with one set to shutdown equipment upon excessive vibration and a second set for monitoring alarm level vibration. The vibration sensing range must be a true rms reading, suitable for the application. The unit must include either displacement response for low speed or velocity response for high speed application. The frequency range must be at least 3 Hz to 500 Hz. Contact time delay must be 3 seconds. The unit must have independent start-up and running delay on each switch contact. Alarm limits must be adjustable and setpoint accuracy must be plus or minus 10 percent of setting with repeatability of plus or minus 2 percent.

2.5.11 Floor Mounted Leak Detector

Leak detectors must use electrodes mounted at slab level with a minimum built-in-vertical adjustment of 0.125 inches. Detector must have a binary output. The indicator must be manual reset type.

2.5.12 Temperature Switch

2.5.12.1 Duct Mount Temperature Low Limit Safety Switch (Freezestat)

Duct mount temperature low limit switches (Freezestats) must be manual reset, low temperature safety switches at least 1 foot long per square foot of coverage which must respond to the coldest 18 inch segment with an accuracy of plus or minus 3.6 degrees F. The switch must have a field-adjustable setpoint with a range of at least 30 to 50 degrees F. The switch must have two sets of contacts, and each contact must have a rating greater than its connected load. Contacts must open or close upon drop of temperature below setpoint as indicated and must remain in this state until reset.

2.5.13 Damper End Switches

Each end switch must be a hermetically sealed switch with a trip lever and over-travel mechanism. The switch enclosure must be suitable for mounting on the duct exterior and must permit setting the position of the trip lever that actuates the switch. The trip lever must be aligned with the damper blade.

End switches integral to an electric damper actuator are allowed as long as at least one is adjustable over the travel of the actuator.

2.5.14 Air Quality Sensors

Provide full spectrum air quality sensors using a hot wire element based on the Taguchi principle. The sensor must monitor a wide range of gaseous volatile organic components common in indoor air contaminants like paint fumes, solvents, cigarette smoke, and vehicle exhaust. The sensor must automatically compensate for temperature and humidity, have span and calibration potentiometers, operate on 24 VDC power with output of 0-10 VDC, and have a service rating of 32 to 140 degrees F and 5 to 95 percent relative humidity.

2.6 OUTPUT DEVICES

2.6.1 Actuators

Actuators must be electric (electronic). All actuators must be normally open (NO), normally closed (NC) or fail-in-last-position (FILP) as

indicated. Normally open and normally closed actuators must be of mechanical spring return type. Electric actuators must have an electronic cut off or other means to provide burnout protection if stalled. Actuators must have a visible position indicator. Electric actuators must provide position feedback to the controller as indicated. Actuators must smoothly and fully open or close the devices to which they are applied. Electric actuators must have a full stroke response time in both directions of 90 seconds or less at rated load. Electric actuators must be of the foot-mounted type with an oil-immersed gear train or the direct-coupled type. Where multiple electric actuators operate from a common signal, the actuators must provide an output signal identical to its input signal to the additional devices. All actuators must be rated for their operating environment. Actuators used outdoors must be designed and rated for outdoor use and not require a weatherproof enclosure. Actuators under continuous exposure to water, such as those used in sumps, must be submersible.

Actuators incorporating an integral network connection are considered DDC Hardware and must meet the DDC Hardware requirements of Section 23 09 23.02 22 BACNET DIRECT DIGITAL CONTROL FOR HVAC AND OTHER BUILDING CONTROL SYSTEMS.

2.6.1.1 Damper Actuators

Damper actuators must provide the torque necessary per damper manufacturer's instructions to modulate the dampers smoothly over its full range of operation and torque must be at least 6 inch-pounds/1 square foot of damper area for opposed blade dampers and 9 inch-pounds/1 square foot of damper area for parallel blade dampers.

2.6.1.2 Electric Actuators

Each actuator must have distinct markings indicating the full-open and full-closed position Each actuator must deliver the torque required for continuous uniform motion and must have internal end switches to limit the travel, or be capable of withstanding continuous stalling without damage. Actuators must function properly within 85 to 110 percent of rated line voltage. Provide actuators with hardened steel running shafts and gears of steel or copper alloy. Fiber or reinforced nylon gears may be used for torques less than 16 inch-pounds.

a. Two-position actuators must be single direction, spring return, or reversing type. Two position actuator signals may either be the control power voltage or line voltage as needed for torque or appropriate interlock circuits.

b. Modulating actuators must be capable of stopping at any point in the cycle, and starting in either direction from any point. Actuators must be equipped with a switch for reversing direction, and a button to disengage the clutch to allow manual adjustments. Provide the actuator with a hand crank for manual adjustments, as applicable. Modulating actuator input signals can either be a 4 to 20 mAdc or a 0-10 VDC signal.

c. Floating or pulse width modulation actuators are acceptable for non-fail safe applications unless indicated otherwise provided that the floating point control (timed actuation) must have a scheduled re-calibration of span and position no more than once a day and no less than once a week. The schedule for the re-calibration should not

affect occupied conditions and be staggered between equipment to prevent falsely loading or unloading central plant equipment.

2.6.2 Relays

Relays must have contacts rated for the intended application, indicator light, and dust proof enclosure. The indicator light must be lit when the coil is energized and off when coil is not energized.

Control relay contacts must have utilization category and ratings selected for the application. Each set of contacts must incorporate a normally open (NO), normally closed (NC) and common contact. Relays must be rated for a minimum life of one million operations.

2.7 USER INPUT DEVICES

User Input Devices, including potentiometers, switches and momentary contact push-buttons. Potentiometers must be of the thumb wheel or sliding bar type. Momentary Contact Push-Buttons may include an adjustable timer for their output. User input devices must be labeled for their function.

2.8 MULTIFUNCTION DEVICES

Multifunction devices are products which combine the functions of multiple sensor, user input or output devices into a single product. Unless otherwise specified, the multifunction device must meet all requirements of each component device. Where the requirements for the component devices conflict, the multifunction device must meet the most stringent of the requirements.

2.8.1 Current Sensing Relay Command Switch

The Current Sensing Relay portion must meet all requirements of the Current Sensing Relay input device. The Command Switch portion must meet all requirements of the Relay output device except that it must have at least one normally-open (NO) contact.

Current Sensing Relays used for Variable Frequency Drives must be rated for Variable Frequency applications unless installed on the source side of the drive. If used in this situation, the threshold for showing status must be set to allow for the VFD's control power when the drive is not enabled and provide indication of operation when the drive is enabled at minimum speed.

2.8.2 Space Sensor Module

Space Sensor Modules must be multifunction devices incorporating a temperature sensor and one or more of the following as specified and indicated on the Space Sensor Module Schedule:

a. A temperature indicating device.

b. A User Input Device which must adjust a temperature setpoint output.

c. A User Input Momentary Contact Button and an output to the control system indicating zone occupancy.

d. A three position User Input Switch labeled to indicate heating,

cooling and off positions ('HEAT-COOL-OFF' switch) and providing corresponding outputs to the control system.

e. A two position User Input Switch labeled with 'AUTO' and 'ON' positions and providing corresponding output to the control system..

f. A multi-position User Input Switch with 'OFF' and at least two fan speed positions and providing corresponding outputs to the control system.

Space Sensor Modules cannot contain mercury (Hg).

PART 3 EXECUTION

3.1 INSTALLATION

3.1.1 General Installation Requirements

Perform the installation under the supervision of competent technicians regularly employed in the installation of DDC systems.

All material and equipment must be installed in accordance with the manufacturer's recommendations for the intended purpose. Maintain a copy of the manufacture's recommendations on the Contruction Site. Use the more stringent methods when manufacturer's recommendations, and plans & specification requirements differ. Use the "Preferred" method when alternative methods are given. The word "should" will be considered to mean "must". Bring any conflicts between manufacturer's recommendations and plans & specification requirements to the Government's attention. Install all equipment level and plumb.

3.1.1.1 Device Mounting Criteria

All devices must be installed in accordance with manufacturer's recommendations and as specified and indicated. Control devices to be installed in piping and ductwork must be provided with required gaskets, flanges, thermal compounds, insulation, piping, fittings, and manual valves for shutoff, equalization, purging, and calibration. Strap-on temperature sensing elements must not be used except as specified. Spare thermowells must be installed adjacent to each thermowell containing a sensor and as indicated. Devices located outdoors must have a weathershield.

3.1.1.2 Labels and Tags

Match labels and tags to the unique identifiers indicated on the As-Built drawings. Label all enclosures and instrumentation. Tag all sensors and actuators in mechanical rooms. Tag airflow measurement arrays to show flow rate range for signal output range, duct size, and pitot tube AFMA flow coefficient. Tag duct static pressure taps at the location of the pressure tap. Provide plastic or metal tags, mechanically attached directly to each device or attached by a metal chain or wire. Labels exterior to protective enclosures must be engraved plastic and mechanically attached to the enclosure or instrumentation. Labels inside protective enclosures may attached using adhesive, but must not be hand written.

3.1.2 Weathershield

Provide weathershields for sensors located outdoors. Install weathershields such that they prevent the sun from directly striking the sensor and prevent rain from directly striking or dripping onto the sensor. Install weather shields with adequate ventilation so that the sensing element responds to the ambient conditions of the surroundings. When installing weathershields near outside air intake ducts, install them such that normal outside air flow does not cause rainwater to strike the sensor.

3.1.3 Room Instrument Mounting

Mount room instruments, including but not limited to wall mounted non-adjustable space sensor modules and sensors located in occupied spaces, 60 inches above the floor unless otherwise indicated. Install adjustable devices to be ADA compliant unless otherwise indicated on the Room Sensor Schedule:

a. Space Sensor Modules for Fan Coil Units may be either unit or wall mounted but not mounted on an exterior wall.

b. Wall mount all other Space Sensor Modules.

3.1.4 Indication Devices Installed in Piping and Liquid Systems

Provide snubbers for gauges in piping systems subject to pulsation. For gauges for steam service use pigtail fittings with cock. Install thermometers and temperature sensing elements in liquid systems in thermowells. Provide spare Pressure/Temperature Ports (Pete's Plug) for all temperature and pressure sensing elements installed in liquid systems for calibration/testing.

3.1.5 Occupancy Sensors

Provide a sufficient quantity of occupancy sensors to provide complete coverage of the area (room or space). Occupancy sensors are to be ceiling mounted. Install occupancy sensors in accordance with NFPA 70 requirements and the manufacturer's instructions. Do not locate occupancy sensors within 6 feet of HVAC outlets or heating ducts, or where they can "see" beyond any doorway. Installation above doorway(s) is preferred. Do not use ultrasonic sensors in spaces containing ceiling fans. Install sensors to detect motion to within 2 feet of all room entrances and to not trigger due to motion outside the room. Set the off-delay timer to [15][_____] minutes unless otherwise indicated. Adjust sensors prior to beneficial occupancy, but after installation of furniture systems, shelving, partitions, etc. For each controlled area, provide one hundred percent coverage capable of detecting small hand-motion movements, accommodating all occupancy habits of single or multiple occupants at any location within the controlled room.

3.1.6 Switches

3.1.6.1 Temperature Limit Switch

Provide a temperature limit switch (freezestat) to sense the temperature at the location indicated. Provide a sufficient number of temperature limit switches (freezestats) to provide complete coverage of the duct section but no less than 1 foot in length per square foot of cross sectional area. Install manual reset limit switches in approved, accessible locations where they can be reset easily. Install temperature

limit switch (freezestat) sensing elements in a side-to-side (not top-to-bottom) serpentine pattern with the relay section at the highest point and in accordance with the manufacturer's installation instructions.

3.1.6.2 Hand-Off Auto Switches

Wire safety controls such as smoke detectors, freeze protection thermostats, and emergency shut down switches to protect the equipment during both hand and auto operation.

3.1.7 Temperature Sensors

Install temperature sensors in locations that are accessible and provide a good representation of sensed media. Installations in dead spaces are not acceptable. Calibrate and install sensors according to manufacturer’s instructions. Select sensors only for intended application as designated or recommended by manufacturer.

3.1.7.1 Room Temperature Sensors

Mount the sensors on interior walls to sense the average room temperature at the locations indicated. Avoid locations near heat sources such as copy machines or locations by supply air outlet drafts. Mount the center of all user-adjustable sensors [5 feet above the finished floor][54 inches above the floor to meet ADA requirements][at the height[s] indicated]. Non user-adjustable sensors can be mounted as indicated in paragraph ROOM INSTRUMENT MOUNTING.

3.1.7.2 Duct Temperature Sensors

3.1.7.2.1 Probe Type

Place tip of the sensor in the middle of the airstream or in accordance with manufacturer's recommendations or instructions.Provide a gasket between the sensor housing and the duct wall. Seal the duct penetration air tight. When installed in insulated duct, provide enclosure or stand off fitting to accommodate the thickness of duct insulation to allow for maintenance or replacement of the sensor and wiring terminations. Seal the duct insulation penetration vapor tight.

3.1.7.2.2 Averaging Type

Weave the sensing element in a serpentine fashion from side to side perpendicular to the flow, across the duct or air handler cross-section, using durable non-metal supports in accordance with manufacturer's installation instructions. Avoid tight radius bends or kinking of the sensing element. Prevent contact between the sensing element and the duct or air handler internals. Provide a duct access door at the sensor location. The access door must be hinged on the side, factory insulated, have cam type locks, and be as large as the duct will permit, maximum 18 by 18 inches. For sensors inside air handlers, the sensors must be fully accessible through the air handler's access doors without removing any of the air handler's internals.

3.1.7.3 Outside Air Temperature Sensors

Provide outside air temperature sensors on the building's north side with a protective weather shade that does not inhibit free air flow across the sensing element, and protects the sensor from snow, ice, and rain.

Location must not be near exhaust hoods and other areas such that it is not influenced by radiation or convection sources which may affect the reading. Provide a shield to shade the sensor from direct sunlight.

3.1.8 Air Flow Measurement Arrays (AFMA)

Locate Outside Air AFMAs downstream from the Outside Air filters.

Install AFMAs with the manufacturer's recommended minimum distances between upstream and downstream disturbances. Airflow straighteners may be used to reduce minimum distances as recommended by the AFMA manufacturer.

3.1.9 Duct Static Pressure Sensors

Locate the duct static pressure sensing tap at 75 percent of the distance between the first and last air terminal units as indicated on the design documents. If the transmitter output is a 0-10Vdc signal, locate the transmitter in the same enclosure as the air handling unit (AHU) controller for the AHU serving the terminal units. If a remote duct static pressure sensor is to be used, run the signal wire back to the controller for the air handling unit.

3.1.10 Relative Humidity Sensors

Install relative humidity sensors in supply air ducts at least 10 feet downstream of humidity injection elements.

3.1.11 Meters

3.1.11.1 Energy Meters

Locate energy meters as indicated. Connect each meter output to the DDC system, to measure both instantaneous demand/energy and other variables as indicated.

3.1.12 Dampers

3.1.12.1 Damper Actuators

Provide spring return actuators which fail to a position that protects the served equipment and space on all control dampers related to freeze protection or force protection. For all outside, makeup and relief dampers provide dampers which fail closed. Terminal fan coil units, terminal VAV units, convectors, and unit heaters nay be non-spring return unless indicated otherwise. Do not mount actuators in the air stream. Do not connect multiple actuators to a common drive shaft. Install actuators so that their action seal the damper to the extent required to maintain leakage at or below the specified rate and so that they move the blades smoothly throughout the full range of motion.

3.1.12.2 Damper Installation

Install dampers straight and true, level in all planes, and square in all dimensions. Dampers must move freely without undue stress due to twisting, racking (parallelogramming), bowing, or other installation error. External linkages must operate smoothly over the entire range of motion, without deformation or slipping of any connecting rods, joints or brackets that will prevent a return to it's normal position. Blades must

close completely and leakage must not exceed that specified at the rated static pressure. Provide structural support for multi-section dampers. Acceptable methods of structural support include but are not limited to U-channel, angle iron, corner angles and bolts, bent galvanized steel stiffeners, sleeve attachments, braces, and building structure. Where multi-section dampers are installed in ducts or sleeves, they must not sag due to lack of support. Do not use jackshafts to link more than three damper sections. Do not use blade to blade linkages. Install outside and return air dampers such that their blades direct their respective air streams towards each other to provide for maximum mixing of air streams.

3.1.13 Thermometers and Gauges

3.1.13.1 Thermometers

Mount devices to allow reading while standing on the floor or ground, as applicable.

3.1.14 Wire and Cable

Provide complete electrical wiring for the Control System, including wiring to transformer primaries. Wire and Cable must be installed without splices between control devices and in accordance with NFPA 70 and NFPA 90A. Instrumentation grounding must be installed per the device manufacturer's instructions and as necessary to prevent ground loops, noise, and surges from adversely affecting operation of the system. Test installed ground rods as specified in IEEE 142. Cables and conductor wires must be tagged at both ends, with the identifier indicated on the shop drawings. Electrical work must be as specified in Section 26 20 00 INTERIOR DISTRIBUTION SYSTEM and as indicated. Wiring external to enclosures must be run in raceways

Install control circuit wiring not in raceways in a neat and safe manner. Wiring must not use the suspended ceiling system (including tiles, frames or hangers) for support. Where conduit or raceways are required, control circuit wiring must not run in the same conduit/raceway as power wiring over 50 volts. Run all circuits over 50 volts in conduit, metallic tubing, covered metal raceways, or armored cable.

-- End of Section --

SECTION 23 09 23.02 22

BACNET DIRECT DIGITAL CONTROL FOR HVAC AND OTHER BUILDING CONTROL SYSTEMS
11/19

PART 1 GENERAL

1.1 SUMMARY

Provide a complete Direct Digital Control (DDC) system, except for the front end which is existing and new system integration being performed by the Government, suitable for the control of the heating, ventilating and air conditioning (HVAC) and other building-level systems as specified and shown and in accordance with Section 23 09 00.00 22 INSTRUMENTATION AND CONTROL FOR HVAC.

1.1.1 System Requirements

Provide a system meeting the requirements of both Section 23 09 00.00 22 INSTRUMENTATION AND CONTROL FOR HVAC and this Section and with the following characteristics:

a. Except for Gateways, the control system must be an open implementation of BACnet technology using ASHRAE 135 and Fox as the communications protocols. The system must use standard ASHRAE 135 Objects and Properties and the Niagara Framework. The system must use standard ASHRAE 135 Services and the Niagara Framework exclusively for communication over the network. Gateways to packaged units must communicate with other DDC hardware using ASHRAE 135 or the Fox protocol exclusively and may communicate with packaged equipment using other protocols. The control system must be installed such that any two ASHRAE 135 devices on the Internetwork can communicate using standard ASHRAE 135 Services.

b. Install and configure control hardware to provide ASHRAE 135 Objects and Properties or Niagara Framework Objects as indicated and as needed to meet the requirements of this specification.

c. Use Niagara Framework hardware and software exclusively for scheduling, trending, and communication with a front end (UMCS). Use Niagara Framework or standard BACnet Objects and services for alarming. Use the Fox protocol for all communication between Niagara Framework Supervisory Gateways; use the ASHRAE 135 protocol for all other building communication. Niagara Framework Supervisory Gateway must serve web pages as specified.

d. Use Niagara Framework AX supervisor (JCI FX web supervisor) or Johnson Controls Incorporated (JCI) Metasys Extended Architecture (ADX server).

1.1.2 Verification of Specification Requirements

Review all specifications related to the control system installation and advise the Contracting Officer of any discrepancies before performing any work. If Section 23 09 00.00 22 INSTRUMENTATION AND CONTROL FOR HVAC or any other Section referenced in this specification is not included in the project specifications advise the Contracting Officer and either obtain the missing Section or obtain Contracting Officer approval before performing any work.

1.2 REFERENCES

The publications listed below form a part of this specification to the extent referenced. The publications are referred to within the text by the basic designation only.

AMERICAN SOCIETY OF HEATING, REFRIGERATING AND AIR-CONDITIONING ENGINEERS (ASHRAE)

ASHRAE 135	(2016) BACnet—A Data Communication Protocol for Building Automation and Control Networks

BACNET INTERNATIONAL (BTL)

BTL Guide	(v.49; 2017) BACnet Testing Laboratory Implementation Guidelines

INSTITUTE OF ELECTRICAL AND ELECTRONICS ENGINEERS (IEEE)

IEEE 802.3	(2018) Ethernet

TELECOMMUNICATIONS INDUSTRY ASSOCIATION (TIA)

TIA-485	(1998a; R 2012) Electrical Characteristics of Generators and Receivers for Use in Balanced Digital Multipoint Systems

TRIDIUM, INC (TRIDIUM)

Niagara Framework	(2012) NiagaraAX User's Guide
Tridium Open NiCS	(2005) Understanding the NiagaraAX Compatibility Statement (NiCS)

U.S. FEDERAL COMMUNICATIONS COMMISSION (FCC)

FCC Part 15	Radio Frequency Devices (47 CFR 15)

UNDERWRITERS LABORATORIES (UL)

UL 916	(2007; Reprint Aug 2014) Standard for Energy Management Equipment

1.3 DEFINITIONS

For definitions related to this section, see Section 23 09 00.00 22 INSTRUMENTATION AND CONTROL FOR HVAC.

1.4 SUBMITTALS

Submittal requirements related to this Section are specified in Section 23 09 00.00 22 INSTRUMENTATION AND CONTROL FOR HVAC.

PART 2 PRODUCTS

All products used to meet this specification must meet the indicated requirements, but not all products specified here will be required by

every project. All products must meet the requirements both Section 23 09 00.00 22 INSTRUMENTATION AND CONTROL FOR HVAC and this Section.

2.1 NETWORK HARDWARE

2.1.1 BACnet Router

All BACnet Routers must be BACnet/IP Routers and must perform layer 3 routing of ASHRAE 135 packets over an IP network in accordance with ASHRAE 135 Annex J and Clause 6. The router must provide the appropriate connection to the IP network and connections to one or more ASHRAE 135 MS/TP networks. Devices used as BACnet Routers must meet the requirements for DDC Hardware, and except for Niagara Framework Supervisory Gateways, devices used as BACnet routers must support the NM-RC-B BIBB.

2.1.2 BACnet Gateways

In addition to the requirements for DDC Hardware, the BACnet Gateway must be a Niagara Framework Supervisory Gateway or must meet the following requirements:

a. It must perform bi-directional protocol translation from one non-ASHRAE 135 protocol to ASHRAE 135. BACnet Gateways must incorporate a network connection to an ASHRAE 135 network (gateway must be MS/TP, BACnet over IP is not permitted within the DDC system) and a separate connection appropriate for the non-ASHRAE 135 protocol and media.

b. It must retain its configuration after a power loss of an indefinite time, and must automatically return to their pre-power loss state once power is restored.

c. It must allow bi-directional mapping of data between the non-ASHRAE 135 protocol and Standard Objects as defined in ASHRAE 135. It must support the DS-RP-B BIBB for Objects requiring read access and the DS-WP-B BIBB for Objects requiring write access.

d. It must support the DS-COV-B BIBB.

Although Gateways must meet DDC Hardware requirements, except for Niagara Framework Supervisory Gateways, they are not DDC Hardware and must not be used when DDC Hardware is required. (Niagara Framework Supervisory Gateways are both Gateways and DDC Hardware.)

2.1.3 Ethernet Switch

Ethernet Switches must autoconfigure between 10,100 and 1000 megabits per second (MBPS).

2.1.4 Emergency Shut Down Switches (ATFP)

Anti Terrorism Force Protection emergency shut down switches must be two action to prevent accidental initiation, such as a mushroom push button with a cover.

2.1.5 Notebook Computer

Provide a notebook computer, complete with the project's installed DDC software, applications database, final archived field controller programs and Supervisory controller database, and graphics to fully troubleshoot

and program the project's devices. Provide the notebook computer with ballistic nylon carrying case with shoulder strap with all necessary cables and interface hardware needed for setup and direct communication with the controllers and control system components. Direct communication must not be through the Supervisory controller. At a minimum the notebook computer is to include: Common Access Card Reader, Windows based operating system, minimum 2.7 GHz processor with 3 MB Cache, discrete switchable graphics card with minimum 1 GB dedicated memory, 1 Terabyte hard drive, 6 32 GB DDR3 RAM, 2 USB 3.0 ports, 10/100/1000 network interface card, 802.11 b/g/n WLAN, 17-inch display, keyboard with numeric keypad, 6-hour battery with charger, internal or external 8X DVD+/-R/RW drive with double layer support with DVD creator software, and Microsoft Office Home and Business bundled software. Provide all original licenses, installation media, documentation, and recovery CDs capable of restoring the original configuration. Provide a means to connect the notebook computer directly to the installed field bus. Provide the manufacturer's 3-year accidental damage protection with 3-day on site response for 2 year warranty with the Government listed as the warranty owner. Provide (1) notebook computer per project identified in RFP package.

2.1.5.1 Notebook Computer DDC Software

Provide the workstation software with the manufacturer's installation CDs and licenses. Configure the software according to the DDC system manufacturer's specifications, cybersecurity requirements, and in agreement with BACnet Operator Workstation (B-OWS) device standards found in ASHRAE 135, Annex L. The workstation software must permit complete monitoring, modification, archiving, programming, and troubleshooting interface with the DDC system including supervisory controller and field controllers. The operator interface with the software is to be menu-driven with appropriate displays and menu commands to manipulate the DDC system's objects, point data, operating schedules, control routines, system configuration, trends, alarms, messages, graphics, and reports. Trends must be capable of graphic display in real time, with variables plotted as functions of time. Each alarmed point is to be capable of displaying its alarm history, showing when it went into alarm, if and when it was acknowledged, and when it went out of alarm. The modification of DDC system parameters and object properties must be accomplished with "fill in the blank" and/or "point and drag" methods. Download modifications to the appropriate controllers at the operator's request.

2.2 CONTROL NETWORK WIRING

a. BACnet MS/TP communications wiring must be in accordance with ASHRAE 135. The wiring must use shielded, three wire (twisted-pair with reference) cable with characteristic impedance between 100 and 120 ohms. Distributed capacitance between conductors must be less than 30 pF per foot.

b. Building Control Network Backbone IP Network must use Ethernet media. Ethernet cables must be CAT-5e at a minimum and meet all requirements of IEEE 802.3.

2.3 DIRECT DIGITAL CONTROL (DDC) HARDWARE

2.3.1 General Requirements

All DDC Hardware must meet the following requirements:

a. It must be locally powered and must incorporate a light to indicate the device is receiving power.

b. It must conform to the BTL Guide

c. It must be BACnet Testing Laboratory (BTL) Listed.

d. The Manufacturer's Product Data submittal for each piece of DDC Hardware must include the Protocol Implementation Conformance Statement (PICS) for that hardware as specified in Section 23 09 00.00 22 INSTRUMENTATION AND CONTROL FOR HVAC.

e. It must communicate and be interoperable in accordance with ASHRAE 135 and have connections for BACnet IP or MS/TP control network wiring.

f. Other than devices controlling terminal units or functioning solely as a BACnet Router, it must support DS-COV-B, DS-RPM-A and DS-RPM-B BIBBs.

g. Devices supporting the DS-RP-A BIBB must also support the DS-COV-A BIBB.

h. Application programs, configuration settings and communication information must be stored in a manner such that they persist through loss of power:

   (1) Application programs must persist regardless of the length of time power is lost.

   (2) Configured settings must persist for any loss of power less than 2,500 hours.

   (3) Communication information, including but not limited to COV subscriptions, event reporting destinations, Notification Class Object settings, and internal communication settings, must persist for any loss of power less than 2,500 hours.

i. Internal Clocks:

   (1) Clocks in DDC Hardware incorporating a Clock must continue to function for 120 hours upon loss of power to the DDC Hardware.

   (2) DDC Hardware incorporating a Clock must support the DM-TS-B or DM-UTC-B BIBB.

j. It must have all functionality indicated and required to support the application (Sequence of Operation or portion thereof) in which it is used, including but not limited to providing Objects or Niagara Framework Points as specified and as indicated on the Points Schedule.

k. In addition to these general requirements and the DDC Hardware Input-Output (I/O) Function requirements, all DDC Hardware must also meet any additional requirements for the application in which it is used (e.g. scheduling, alarming, trending, etc.).

l. It must meet FCC Part 15 requirements and have UL 916 or equivalent safety listing.

m. Except for Niagara Framework Supervisory Gateways, Device must support Commandable Objects to support Override requirements as detailed in

PART 3 EXECUTION

n. User interfaces which allow for modification of Properties or settings must be password-protected.

o. Devices communicating BACnet MS/TP must meet the following requirements:

(1) Must have a configurable Max_Master Property.

(2) DDC Hardware other than hardware controlling a single terminal unit must have a configurable Max_Info_Frames Property.

(3) Must respond to any valid request within 50 msec with either the appropriate response or with a response of "Reply Postponed".

(4) Must use twisted pair with reference and shield (3-wire media) wiring, or twisted pair with shield (2-wire media) wiring and use half-wave rectification.

p. Devices communicating BACnet/IP must use UDP Port 0xBAC0. Devices with configurable UDP Ports must default to 0xBAC0.

q. All Device IDs, Network Numbers, and BACnet MAC addresses of devices must be fully configurable without limitation, except MS/TP MAC addresses may be limited by ASHRAE 135 requirements.

r. Except for Niagara Framework Supervisory Gateways, DDC Hardware controlling a single terminal unit must have:

(1) Objects (including the Device Object) with an Object Name Property of at least 8 characters in length.

(2) A configurable Device Object Name.

(3) A configurable Device Object Description Property at least 16 characters in length.

s. Except for Objects in either Niagara Framework Supervisory Gateways or DDC Hardware controlling a single terminal unit, all Objects (including Device Objects) must:

(1) Have a configurable Object Name Property of at least 12 characters in length.

(2) Have a configurable Object Description Property of at least 24 characters in length.

t. For programmable DDC Hardware, provide and license to the project site all programming software required to program the Hardware in accordance with Section 23 09 00.00 22 INSTRUMENTATION AND CONTROL FOR HVAC.

u. For programmable DDC Hardware, provide copies of the installed application programs (all software that is not common to every controller of the same manufacturer and model) as source code compatible with the supplied programming software in accordance with Section 23 09 00.00 22 INSTRUMENTATION AND CONTROL FOR HVAC. The submitted application program must be the complete application

necessary for controller to function as installed and be sufficient to allow replacement of the installed controller with another controller of the same type.

2.3.2 Hardware Input-Output (I/O) Functions

DDC Hardware incorporating hardware input-output (I/O) functions must meet the following requirements:

2.3.2.1 I/O Point Limitation

The total number of I/O hardware points used by a single stand-alone digital controller, including I/O expansion units, must not exceed 64, except for complex individual equipment or systems. Place I/O expansion units in the same cabinet as the digital controller. The field controller must have one spare Configurable Output and one spare Universal Input available per system upon project completion, i.e. AHU, ERU, DOAS, HW System, CHW System and other building primary systems. VAV controllers and programmable thermostats are excluded.

2.3.2.2 Analog Inputs

DC Hardware analog inputs (AIs) must be implemented using ASHRAE 135 Analog Input Objects and perform analog to digital (A-to-D) conversion with a minimum resolution of 8 bits plus sign or better as needed to meet the accuracy requirements specified in Section 23 09 00.00 22 INSTRUMENTATION AND CONTROL FOR HVAC. Signal conditioning including transient rejection must be provided for each analog input. Analog inputs must be capable of being individually calibrated for zero and span. Calibration via software scaling performed as part of point configuration is acceptable. The AI must incorporate common mode noise rejection of at least 50 dB from 0 to 100 Hz for differential inputs, and normal mode noise rejection of at least 20 dB at 60 Hz from a source impedance of 10,000 ohms.

2.3.2.3 Analog Outputs

DDC Hardware analog outputs (AOs) must be implemented using ASHRAE 135 Analog Output Objects and perform digital to analog (D-to-A) conversion with a minimum resolution of 8 bits plus sign, and output a signal with a range of 4-20 mAdc or 0-10 Vdc. Analog outputs must be capable of being individually calibrated for zero and span. Calibration via software scaling performed as part of point configuration is acceptable. DDC Hardware with Hand-Off-Auto (H-O-A) switches for analog outputs must provide for overriding the output to 0 percent and to 100 percent. Provide a dedicated analog output to each output device, such as variable frequency driven pump motors in an alternating arrangement.

2.3.2.4 Binary Inputs

DDC Hardware binary inputs (BIs) must be implemented using ASHRAE 135 Binary Input Objects and accept contact closures and must ignore transients of less than 5 milli-second duration. Protection against a transient 50VAC must be provided.

2.3.2.5 Binary Outputs

DDC Hardware binary outputs (BOs) must be implemented using ASHRAE 135 Binary Output Objects and provide relay contact closures or triac outputs

for momentary and maintained operation of output devices. DDC Hardware with H-O-A switches for binary outputs must provide for overriding the output open or closed.

2.3.2.5.1 Relay Contact Closures

Closures must have a minimum duration of 0.1 second. Relays must provide at least 180V of isolation. Electromagnetic interference suppression must be provided on all output lines to limit transients to 50 Vac. Minimum contact rating must be 0.5 amperes at 24 Vac.

2.3.2.5.2 Triac Outputs

Triac outputs must provide at least 180 V of isolation. Minimum contact rating must be 0.5 amperes at 24 Vac.

2.3.2.6 Pulse Accumulator

DDC Hardware pulse accumulators must be implemented using either an ASHRAE 135 Accumulator Object or an ASHRAE 135 Analog Value Object where the Present_Value is the totalized pulse count. Pulse accumulators must accept contact closures, ignore transients less than 5 msec duration, protect against transients of 50 VAC, and accept rates of at least 20 pulses per second.

2.3.2.7 ASHRAE 135 Objects for Hardware Inputs and Outputs

The requirements for use of ASHRAE 135 objects for hardware input and outputs includes devices where the hardware sensor or actuator is integral to the controller (e.g. a VAV box with integral damper actuator, a smart sensor, a VFD, etc.)

2.3.2.8 Integrated H-O-A Switches

Where integrated H-O-A switches are provided on hardware outputs, controller must provide means of monitoring position or status of H-O-A switch. This feedback may be provided via the Niagara Framework or via any valid BACnet method, including the use of proprietary Objects, Properties, or Services.

2.3.2.9 Motor Run Status

Unless otherwise noted, provide current switches to indicate run status of pumps and fans. Sensitivity of the switch on belt driven equipment should distinguish between loaded motor and unloaded motor such as a fan with a broken belt.

2.3.3 Local Display Panel (LDP)

The Local Display Panels (LDPs) must be DDC Hardware with a display and navigation buttons or a touch screen display, and must provide display and adjustment of Niagara Framework points or ASHRAE 135 properties as indicated on the Points Schedule and as specified. LDPs must be either BTL Listed as a B-OD, B-OWS, B-AWS, or be an integral part of another piece of DDC Hardware listed as a B-BC. For LDPs listed as B-OWS or B-AWS, the hardware must be BTL listed and the product must come factory installed with all applications necessary for the device to function as an LDP.

The adjustment of values using display and navigation buttons must be password protected.

2.3.4 Expansion Modules and Tethered Hardware

A single piece of DDC Hardware may consist of a base unit and also:

a. An unlimited number of hardware expansion modules, where the individual hardware expansion modules are designed to directly connect, both mechanically and electrically, to the base unit hardware. The expansion modules must be commercially available as an optional add-on to the base unit.

b. A single piece of hardware connected (tethered) to a base unit by a single cable where the cable carries a proprietary protocol between the base unit and tethered hardware. The tethered hardware must not contain control logic and be commercially available as an optional add-on to the base unit as a single package.

   Note that this restriction on tethered hardware does not apply to sensors or actuators using standard binary or analog signals (not a communications protocol); sensors or actuators using standard binary or analog signals are not considered part of the DDC Hardware.

Hardware capable of being installed stand-alone, or without a separate base unit, is DDC Hardware and must not be used as expansion modules or tethered hardware.

2.3.5 Supervisory Control Requirements

2.3.5.1 Alarm Generation Hardware

Non-Niagara Framework DDC Hardware used for alarm generation must meet the following requirements:

a. Device must support the AE-N-I-B BIBB

b. The Recipient_List Property must be Writable for all Notification Class Objects used for alarm generation.

c. For all Objects implementing Intrinsic Alarming, the following Properties must be Writable:

   (1) Time_Delay
   (2) High_Limit
   (3) Low_Limit
   (4) Deadband
   (5) Event_Enable
   (6) If the issue date of this project specification is after 1 January 2016, Time_Delay_Normal must be writable.

d. It is preferred, but not required, that devices support the DM-OCD-B BIBB on all Notification Class Objects. It is also preferred, but not required that devices supporting the DM-OCD-B BIBB accept any valid value as an initial value for properties of Notification Class Objects.

2.3.6 Niagara Framework Supervisory Gateway

Any device implementing the Niagara Framework is a Niagara Framework

Supervisory Gateway and must meet these requirements. In addition to the general requirements for all DDC Hardware, Niagara Framework Supervisory Gateway Hardware must:

a. Be direct digital control hardware.

b. Have an unrestricted interoperability license and its Niagara Compatibility Statement (NiCS) must follow the Tridium Open NiCS Specification.

c. Manage communications between a field control network and the Niagara Framework Monitoring and Control Software, and between itself and other Niagara Framework Supervisory Gateways. Niagara Framework Supervisory Gateway Hardware must use Fox protocol for communication with other Niagara Framework Components, regardless of the manufacturer of the other components.

d. Be fully programmable using the Niagara Framework Engineering Tool and must support the following:

(1) Time synchronization, Calendar, and Scheduling using Niagara Scheduling Objects

(2) Alarm generation and routing using the Niagara Alarm Service

(3) Trending using the Niagara History Service and Niagara Trend Log Objects

(4) Integration of field control networks using the Niagara Framework Engineering Tool

(5) Configuration of integrated field control system using the Niagara Framework Engineering Tool when supported by the field control system

e. Meet the following minimum hardware requirements:

(1) Two 10/100/1000 Mbps Ethernet Port(s)

(2) One or more MS/TP ports.

(3) Central Processing Unit of 600 Mhz or higher.

(4) Embedded operating system.

f. Submit a backup of each Niagara Framework Supervisory Gateway as specified in Section 23 09 00.00 22 INSTRUMENTATION AND CONTROL FOR HVAC. The backup must be sufficient to restore a Niagara Framework Supervisory Gateway to the final as-built condition such that a new Niagara Framework Supervisory Gateway loaded with the backup is indistinguishable in functionality from the original.

2.4 Niagara Framework Engineering Tool

The Niagara Framework Engineering Tool must be Niagara Workbench or an equivalent Niagara Framework engineering tool software and must:

a. Have an unrestricted interoperability license and its Niagara Compatibility Statement (NiCS) must follow the Tridium Open NiCS

Specification.

b. Be capable of performing network configuration for Niagara Framework Supervisory Gateways and Niagara Framework Monitoring and Control Software.

c. Be capable of programming and configuring of Niagara Framework Supervisory Gateways and Niagara Framework Monitoring and Control Software.

d. Be capable of discovery of Niagara Framework Supervisory Gateways and all points mapped into each Niagara Framework Supervisory Gateway and making these points accessible to Niagara Framework Monitoring and Control Software.

PART 3 EXECUTION

3.1 CONTROL SYSTEM INSTALLATION

3.1.1 Building Control Network (BCN)

Install the Building Control Network (BCN) as a single BACnet Internetwork consisting of a single IP network as the BCN Backbone and zero or more BACnet MS/TP networks. Note that in some cases there may only be a single device on the BCN Backbone.

Except for the IP Network and as permitted for the non-BACnet side of Gateways, use exclusively ASHRAE 135 networks.

3.1.1.1 Building Control Network IP Backbone

Install IP Network Cabling in conduit. Install Ethernet Switches in lockable enclosures. Install the Building Control Network (BCN) IP Backbone such that it is available at the Facility Point of Connection (FPOC) location to be determined during construction. When the FPOC location is a room number, provide sufficient additional media to ensure that the Building Control Network (BCN) IP Backbone can be extended to any location in the room.

Use UDP port 0xBAC0 for all BACnet traffic on the IP network. (Note that in a Niagara Framework system there may not be BACnet traffic on the IP Network)

3.1.1.2 BACnet MS/TP Networks

When using MS/TP, provide MS/TP networks in accordance with ASHRAE 135 and in accordance with the ASHRAE 135 figure "Mixed Devices on 3-Conductor Cable with Shield" (Figure 9-1.4 in the 2012 version of ASHRAE 135). Ground the shield at the BACnet Router and at no other point. Ground the reference wire at the BACnet Router through a 100 ohm resistor and do not ground it at any other point. In addition:

a. Provide each segment in a doubly terminated bus topology in accordance with TIA-485.

b. Provide each segment with 2 sets of network bias resistors in accordance with ASHRAE 135, with one set of resistors at each end of the MS/TP network.

c. Use 3 wire (twisted pair and reference) with shield media for all MS/TP media installed inside. Use fiber optic isolation in accordance with ASHRAE 135 for all MS/TP media installed outside buildings, or between multiple buildings.

d. For 18 AWG cable, use segments with a maximum length of 4000 ft. When using greater distances or different wire gauges comply with the electrical specifications of TIA-485.

e. For each controller that does not use the reference wire provide transient suppression at the network connection of the controller if the controller itself does not incorporate transient suppression.

f. Install no more than 32 devices on each MS/TP segment. Do not use MS/TP to MS/TP routers.

g. Connect each MS/TP network to the BCN backbone via a Niagara Framework Supervisory Gateway configured as a BACnet Router.

h. For BACnet Routers, configure the MS/TP MAC address to 0. Assign MAC Addresses to other devices consecutively beginning at 1, with no gaps.

i. Configure the Max_Master Property of all devices to be 31.

3.1.1.3 Building Control Network (BCN) Installation

Provide a building control network meeting the following requirements:

a. Install all DDC Hardware connected to the Building Control Network.

b. Where multiple pieces of DDC Hardware are used to execute one sequence, install all DDC Hardware executing that sequence on a single MS/TP network dedicated to that sequence.

c. Traffic between BACnet networks must be exclusively via BACnet routers.

d. Use the Fox protocol for all traffic both originating and terminating at Niagara Framework components. Use the Fox protocol for all traffic originating or terminating at a Niagara Framework UMCS (including traffic to or from a future UMCS). All other traffic, including traffic between ASHRAE 135 devices and traffic between Niagara Framework Supervisory Gateways and ASHRAE 135 devices must be in accordance with ASHRAE 135.

3.1.2 DDC Hardware

Install all DDC Hardware that connects to an IP network in lockable enclosure. Install other DDC Hardware that is not in suspended ceilings in lockable enclosures. For all DDC hardware with a user interface, coordinate with site and Section 25 05 11 CYBER SECURITY FOR FACILITY-RELATED CONTROL SYSTEMS to determine proper passwords and configure passwords into device.

a. Except for zone sensors (thermostats), install all Tethered Hardware within 6 feet of its base unit.

b. Install and configure all BTL-Listed devices in a manner consistent with their BTL Listing such that the device as provided still meets

all requirements necessary for its BTL Listing.

c. Install and configure all BTL-Listed devices in a manner consistent with the BTL Device Implementation Guidelines such that the device as provided meets all those Guidelines.

3.1.2.1 Device Identifiers, Network Addresses, and IP Addresses

a. Do not use any Device Identifier or Network Number already used by another BACnet system at the project site. Coordinate Device IDs and Network Numbers with the installation. The installation POC is Camp Lejeune Public Works.

b. Coordinate device IP addresses with installation. The installation POC is Camp Lejeune Public Works.

3.1.2.2 ASHRAE 135 Object Name Property and Object Description Property

Configure the Object_Names and Object_Descriptions properties of all ASHRAE 135 Objects (including Device Objects) as indicated on the Points Schedule (Point Name and Point Description) and as specified. At a minimum:

a. Except for DDC Hardware controlling a single terminal unit, configure the Object_Name and Object_Description properties of all Objects (including Device Objects) as indicated on the Points Schedule and as specified.

b. In DDC Hardware controlling a single terminal unit, configure the Device Object_Name and Device Object_Description as indicated on the Points Schedule and as specified.

When Points Schedule entries exceed the length limitations in the device, notify Contracting Officer and provide recommended alternatives for approval.

3.1.2.3 Niagara Framework Point Names and Descriptions

Configure the names and descriptions of all Points in Niagara Framework Supervisory Gateways as indicated on the Points Schedule and as specified.

3.1.2.4 Niagara Station IDs

Ensure that Niagara Station IDs of new Niagara Framework Supervisory Gateways are maintained as unique within UMCS front-end, including ensuring they do not conflict with any existing Niagara Station ID.

3.1.2.5 Hand-Off-Auto (H-O-A) Switches

Provide Hand-Off-Auto (H-O-A) switches as specified and as indicated on the Points Schedule. Provide H-O-A switches that are integral to the controller hardware, an external device co-located with (in the same enclosure as) the controller, integral to the controlled equipment, or an external device co-located with (in the same enclosure as) the controlled equipment.

a. For H-O-A switches integral to DDC Hardware, meet the requirements specified in paragraph DIRECT DIGITAL CONTROL (DDC) HARDWARE.

b. For external H-O-A switches used for binary outputs, provide for

overriding the output open or closed.

c. For eternal H-O-A switches used for analog outputs, provide for overriding to 0 percent or 100 percent.

3.1.2.6 Emergency Shut Down Switches (ATFP)

Quantity and location as shown on the drawings. Switches must be hardwired such that all fans and dampers that circulate air between rooms, or between inside and outside must shut down/close regardless of equipment HOA switch position. ATFP circuit must be energized to allow equipment to operate; i.e. activation of the emergency shut down switch will de-energize the circuit and open relays at the equipment. Additionally, activation of the switch must signal the DDC system to shut all air moving equipment off/closed and initiate an alarm. Reset of the DDC system must be manual.

3.1.2.7 Local Display Panels

Provide LDPs to display and override values of points in a Niagara Framework Supervisory Gateway or ASHRAE 135 Object Properties as indicated on the Points Schedule. Install LDPs displaying points for anything other than a terminal unit in the same room as the equipment. For LDPs using WriteProperty to commandable objects to implement an override, write values with priority 9.

3.1.2.8 MS/TP Slave Devices

Configure all MS/TP devices as Master devices. Do not configure any devices to act as slave devices.

3.1.2.9 Change of Value (COV) and Read Property

a. To the greatest extent possible, configure all devices to support the SubscribeCOV service (the DS-COV-B BIBB). At a minimum, all devices supporting the DS-RP-B BIBB, other than devices controlling only a single terminal unit, must be configured to support the DS-COV-B BIBB.

b. Whenever supported by the server side, configure client devices to use the DS-COV-A BIBB.

3.1.2.10 Engineering Units

Configure devices to use English (Inch-Pound) engineering units as follows:

a. Temperature in degrees F

b. Air or natural gas flows in cubic feet per minute (CFM)

c. Water in gallons per minute (GPM)

d. Steam flow in pounds per hour (pph)

e. Differential Air pressures in inches of water column (IWC)

f. Water, steam, and natural gas pressures in PSI

g. Enthalpy in BTU/lb

h. Heating and cooling energy in MBTU (1MBTU = 1,000,000 BTU))

i. Cooling load in tons (1 ton = 12,000 BTU/hour)

j. Heating load in MBTU/hour (1MBTU = 1,000,000 BTU)

k. Electrical Power: kilowatts (kW)

l. Electrical Energy: kilowatt-hours (kWh)

3.1.2.11 Occupancy Modes

Use the following correspondence between value and occupancy mode whenever an occupancy state or value is required:

a. OCCUPIED mode: a value of one
b. UNOCCUPIED mode: a value of two
c. WARM-UP/COOL-DOWN (PRE-OCCUPANCY) mode: a value of three

Note that elsewhere in this Section the Schedule Object is required to also support a value of four, which is reserved for future use. Also note that the behavior of a system in each of these occupancy modes is indicated in the sequence of operation for the system.

3.1.2.12 Use of BACnet Objects

Except as specifically indicated for Niagara Framework Objects, Use only standard non-proprietary ASHRAE 135 Objects and services to accomplish the project scope of work as follows:

a. Use Analog Input or Analog Output Objects for all analog hardware I/O. Do not use Analog Value Object for analog hardware I/O).

b. Use Binary Input or Binary Output Objects for all binary hardware I/O. Do not use Binary Value Objects for binary hardware I/O.

c. Use Analog Value Objects for analog setpoints.

d. Use Accumulator Objects or Analog Value Objects for pulse inputs.

e. For occupancy modes, use Multistate Value Objects and the correspondence between value and occupancy mode specified in paragraph OCCUPANCY MODES.

f. Use a combination of Niagara Framework Alarm Extensions and Alarm Services, Intrinsic Alarming, and Notification Class Objects for alarm generation.

g. For all other points shown on the Points Schedule as requiring an ASHRAE 135 Object, use the Object type shown on the Points Schedule or, if no Object Type is shown, use a standard Object appropriate to the point.

3.1.2.12.1 Niagara Framework Objects

Points in the Niagara Framework Supervisory Gateway, even if used in a sequence or are shown on the Points Schedule, are not required to be exposed as BACnet Objects unless they are required to be available on the network by another device or sequence of operation (i.e. there is some

other reason they are needed).

Use a Niagara Framework Supervisory Gateway as specified for all scheduling and trending. Use a Niagara Framework Supervisory Gateway as specified for all alarming except for intrinsic alarming.

3.1.2.13 Use of Standard BACnet Services

Except as noted in this paragraph, for all DDC Hardware (including Niagara Frameworks Supervisory Gateways when communicating with non-Niagara Framework DDC Hardware) use Standard BACnet Services as defined in this specification (which excludes some ASHRAE 135 services) exclusively for application control functionality and communication.

DDC Hardware that cannot meet this requirement may use non-standard services provided they can provide identical functionality using Standard BACnet Services when communicating with BACnet devices from a different vendor. When implementing non-standard services, document all non-standard services in the DDC Hardware Schedule as specified and as specified in Section 23 09 00.00 22 INSTRUMENTATION AND CONTROL FOR HVAC.

3.1.2.14 Device Application Configuration

a. For every property, setting or value shown on the Points Schedule or otherwise indicated as Configurable, provide a value that is retained through loss of power and can be changed via one or more of:

   (1) BACnet services (including proprietary services)

   (2) Hardware settings on the device

   (3) The Niagara Framework

b. For every property, setting or value in non-Niagara Framework Hardware shown on the Points Schedule or otherwise indicated as Operator Configurable, provide a value that is retained through loss of power and can be changed via one or more of:

   (1) A Writable Property of a standard BACnet Object

   (2) A Property of a standard BACnet Object that is Writable when Out_Of_Service is TRUE and Out_Of_Service is Writable.

   (3) Using some other method supported by a Niagara Framework Supervisory Gateway

c. Configure Niagara Framework Supervisory Gateways such that the property, setting or value is configurable from a Niagara Framework Front End.

d. For every property, setting or value in a Niagara Framework Supervisory Gateway which is shown on the Points Schedule or otherwise indicated as Operator Configurable, configure the value to be configurable from within the Niagara Framework such that it can be configured from a system graphic page at a Niagara Framework Front End.

3.1.2.15 Niagara Framework Engineering Tool

Use the Niagara Framework Engineering Tool to fully discover the field

control system and make all field control system information available to the Niagara Framework Supervisory Gateway. Ensure that all points on the points schedule are available to the front end via the Fox protocol.

3.1.3 Scheduling, Alarming, Trending, and Overrides

3.1.3.1 Scheduling

Configure schedules in Niagara Framework Supervisory Gateway using Niagara Schedule Objects as indicated on the Points Schedule and as specified. When the schedule is controlling occupancy modes in DDC Hardware other than a Niagara Framework Supervisory Gateway use the indicated correspondence between value and occupancy mode.

3.1.3.2 Alarm Configuration

Configure alarm generation and management as indicated on the Points Schedule and as specified. Configure alarm generation in Niagara Framework Supervisory Gateways using Niagara Framework Alarm Extensions and Alarm Services or in other DDC Hardware (not Niagara Framework Supervisory Gateways) using ASHRAE 135 Intrinsic Alarming. Configure alarm management and routing for all alarms, including those generated via intrinsic alarming in other devices, in the Niagara Framework Supervisory Gateway such that the alarms are able to be accessed from the Niagara Framework Front End.

Where Intrinsic Alarming is used, configure intrinsic alarming as specified in paragraph "Configuration of ASHRAE 135 Intrinsic Alarm Generation". Configure a Niagara Framework Supervisory Gateway to provide a means to configure the intrinsic alarm parameters such that the Intrinsic Alarm is configurable from the front end via the Niagara Framework.

3.1.3.3 Configuration of ASHRAE 135 Intrinsic Alarm Generation

Intrinsic alarm generation must meet the following requirements:

Configure alarm generation as indicated on the Points Schedule and as specified using Intrinsic Alarming in accordance with ASHRAE 135 or Algorithmic Alarming in accordance with ASHRAE 135. Alarm generation must meet the following requirements:

a. Send alarm events as Alarms (not Events).

b. Use the ConfirmedNotification Service for alarm events.

c. For alarm generation, support two priority levels for alarms: critical and non-critical. Configure the Priority of Notification Class Objects to use Priority 112 for critical and 224 for non-critical alarms.

d. Number of Notification Class Objects for Alarm Generation:

(1) If the device implements non-critical alarms, or if any Object in the device supports Intrinsic Alarms, then provide a single Notification Class Object specifically for (shared by) all non-critical alarms.

(2) If the device implements critical alarms, provide a single

Notification Class Object specifically for (shared by) all critical alarms.

(3) If the device implements both critical and non-critical alarms, provide both Notification Class Objects (one for critical, one for non-critical).

(4) If the device controls equipment other than a single terminal unit, provide both Notification Class Objects (one for critical, one for non-critical) even if no alarm generation is required at time of installation.

e. For all intrinsic alarms configure the Limit_Enable Property to set both HighLimitEnable and LowLimitEnable to TRUE. If the specified alarm conditions are for a single-sided alarm (only High_Limit used or only Low_Limit used) assign a value to the unused limit such that the unused alarm condition will not occur.

f. For all objects supporting intrinsic alarming, even if no alarm generation is required during installation, configure the following Properties as follows:

(1) Notification_Class to point to the non-Critical Notification Class Object in that device.

(2) Limit_Enable to enable both the HighLimitEnable and LowLimitEnable

(3) Notify_Type to Alarm

g. Configure the Recipient_List Property of the Notification Class Object to point to the Niagara Framework Supervisory Gateway managing the alarm.

3.1.3.4 Trending

Perform all trending using a Niagara Framework Supervisory Gateway using Niagara Framework History Extensions and Niagara Framework History Service exclusively.

3.1.3.5 Overrides

Provide an override for each point shown on the Points Schedule as requiring an override. Use the Niagara Framework for all overrides to points in Niagara Framework Supervisory Gateways. For overrides to other points, provide an override to a point in a Niagara Framework Supervisory Gateway via the Niagara Framework where the Niagara Framework Supervisory Gateway overrides the other point as specified.

Unless otherwise approved, provide Commandable Objects to support all Overrides in non-Niagara Framework Supervisory Gateway DDC Hardware. With specific approval from the contracting officer, Overrides for points which are not hardware outputs and which are in DDC hardware controlling a single terminal unit may support overrides via an additional Object provided for the override. No other means of implementing Overrides may be used.

a. Where Commandable Objects are used, ensure that WriteProperty service requests with a Priority of 10 or less take precedence over the SEQUENCE VALUE and that WriteProperty service request with a priority

of 11 or more have a lower precedence than the SEQUENCE VALUE.

b. For devices implementing overrides via additional Objects, provide Objects which are NOT Written to as part of the normal Sequence of Operations and are Writable when Out_Of_Service is TRUE and Out_Of_Service is Writable. Use this point as an Override of the normal value when Out_Of_Service is TRUE and the normal value otherwise. Note these Objects may be modified as part of the sequence via local processes, but must not be modified by local processes when Out_Of_Service is TRUE.

3.1.4 BACnet Gateways

The requirements in this paragraph do not permit the installation of hardware not meeting the other requirements of this section. All control hardware installed under this project must meet the requirements of this specification, including control hardware provided as part of a package unit or as part of HVAC equipment specified under another section. Except as indicated in paragraph Gateways for Boiler or Chiller Plants, all package units must be provided with a BACnet interface meeting the requirements of this Section. Only use gateways to connect to pre-existing control devices, and to boiler or chiller plants as indicated.

3.1.4.1 General Gateway Requirements

Provide BACnet Gateways to connect non-BACnet control hardware in accordance with the following:

a. Configure gateways to map writable data points in the controlled equipment to Writable Properties of Standard Objects, or to Niagara Framework points, as indicated in the Points Schedule and as specified.

b. Configure gateway to map readable data points in the controlled equipment to Readable Properties of Standard Objects, or to Niagara Framework points, as indicated in the Points Schedule and as specified.

c. Configure gateway to support the DS-COV-B BIBB for all points mapped to BACnet Objects.

d. Do not use non-BACnet control hardware for controlling built-up units or any other equipment that was not furnished with factory-installed controls. (Note: A Niagara Framework Supervisory Gateway is BACnet control hardware.)

e. Do not use non-BACnet control hardware for system scheduling functions.

3.1.4.2 Gateways for Boiler or Chiller Plants

A non-BACnet network of multiple boilers or multiple chillers with a single gateway is permitted only when all the following conditions are met:

a. All units are from the same manufacturer.

b. All units are co-located in the same room, and the network connecting them is fully contained in that room.

c. Units are operating using a common "plant" sequence of operation which stages the units in a manner that requires operational parameters be shared between them and which cannot be accomplished with a single

lead-lag command from a third-party controller.

d. A request for use of a boiler or chiller plant gateway has been submitted and approved in accordance with Section 23 09 00 INSTRUMENTATION AND CONTROL FOR HVAC.

Connect one network port on the gateway to the Building Control Backbone IP Network or to a BACnet MS/TP network and the other port to the boiler or chiller network.

3.1.4.3 Gateways for Application Other than Boiler and Chiller Plants

In addition to the General Gateway Requirements, provide BACnet Gateways to non-BACnet control hardware other than boiler and chiller plants in accordance with the following

a. Each gateway must communicate with and perform protocol translation for non-BACnet control hardware controlling one and only one package unit.

b. Connect one network port on the gateway to the Building Control Backbone IP Network or to a BACnet MS/TP network and the other port to the single piece of controlled equipment.

c. Non-BACnet network wiring connecting the gateway to the package unit must not exceed 10 feet in length and must connect to exactly two devices: the controlled equipment (packaged unit) and the gateway.

-- End of Section --

EMCS Equipment and Points Nomenclature for Camp Lejeune

No.	Nomenclature	Description
	EQUIPMENT	
1	AHU	Air Handling Unit
2	B	Heating Water Boiler
3	B	Steam Boiler
4	C	Chiller
5	CCC	Closed Circuit Cooler
6	CCT	Closed Circuit Tower
7	COM RM	Communication Room
8	CP	Condenser Water Pump
9	CRAC	Computer Room Air Conditioner
10	CT	Cooling Tower
11	CTP	Cooling Tower Pump
12	CTRL PNL	Control Panel
13	CU	Air Cooled Condensing Unit
14	CWP	Chilled Water Supply Pump
15	DECAHP	Defense Commissary Agency HP
16	DHW	Domestic Hot Water
17	DPR	Damper
18	DTS	Dual Temperature System
19	DWP	Domestic Hot Water Pump
20	ECT	Evaporative Cooling Tower
21	EF	Exhaust Fan
22	EST	Elevated Storage Tank
23	FCU	Fan Coil Unit
24	FLTR	Filter
25	GLBT	Ground Level Booster Tank
26	HP	Heat Pump (On Ground)
27	HWP	Hot Water Pump
28	HWT	Hot Water Tank
29	HV	Heating and Ventilating Unit
30	HX	Steam to Hot Water Converter
31	LS	Lift Station
32	LP-PMP	Loop Pump
33	MAD	Mixed Air Damper
34	MAU	Make-up Air Unit
35	MZ	Multizone Unit
36	OA	Outside Air
37	OAT	Outside Air Temperature
38	PACU	Package Unit
39	PHP	Packaged Heat Pump (On Ground)
40	PX	Plate Exchanger
41	RA	Return Air
42	RAF	Return Air Fan
43	RTHP	(RTU) Packaged Rooftop Heat Pump Unit
44	RTMZ	Rooftop Multizone Unit
45	RTU	Rooftop Unit (Packaged DX)
46	RVS-VLV	Reversing Valve
47	SA	Supply Air

EMCS Equipment and Points Nomenclature for Camp Lejeune

No.	Nomenclature	Description
	EQUIPMENT	
48	STP	Secondary Treatment Plant
49	SV	Solenoid Valve/Steam Valve
50	TS	Temperature Sensor
51	TWAC	Thru-Wall Air Conditioner
52	TWHP	Thru-Wall Heat Pump
53	UH	Unit Heater
54	VAV	Variable Air Volume
55	WAC	Window Air Conditioner
56	WS	Work Station
57	WSHP	Water Source Heat Pump
58	WTP	Water Treatment Plant
59	WP	Well Pump
60	ZD	Zone Mixing Damper

EMCS Equipment and Points Nomenclature for Camp Lejeune

No.	Nomenclature	Description
	POINTS	
61	AHU-DHUM	Air Handling Unit Dehumidifier
62	AHU-OVRRD	Air Handling Unit Override
63	ALM-CMD	Alarm Command
64	ALM-HORN	Alarm Horn
65	ALM-RST	Alarm Reset
66	ALM-SIL	Alarm Silence
67	BLR-A	Boiler Alarm
68	BLR-C	Boiler Command
69	BLR-S	Boiler Start
70	BOILER-EN	Boiler Enable
71	BYPD-C	Bypass Damper Command
72	C-?	Chiller Status
73	CD-T	Cold Deck Temperature
74	CH-CMD	Chiller Command
75	CH-OVR	Chiller Override
76	CH-ALM	Chiller Alarm
77	CH-DP	Chiller Differential Pressure
78	CH-FLO-S	Chiller Flow Switch
79	CHILLER-EN	Chiller Enable
80	CHS-T	Chiller Supply Temperature
81	CHW-DP	Chilled Water Differential Pressure
82	CHW-FLOW	Chilled Water Flow
83	CHW-SYS ENABLE	Chilled Water System Enable
84	CLG-C	Cooling Command
85	CLGMAX	Cooling Maximum
86	CLG-NITE	Cooling Night Set Point
87	CLG-SP	Cooling Set Point
88	CLG-VLV	Chilled Water Valve Status
89	CLG-VLV	Chilled Water Valve Operation
90	COND1-S	Condenser 1 Status
91	COND2-S	Condenser 2 Status
92	COOL1-C	Cooling Stage 1 Command
93	COOL2-C	Cooling Stage 2 Command
94	CTFAN-C	Cooling Tower Fan Command
95	CTFAN-S	Cooling Tower Fan Status
96	CWR-T	Chilled Water Return Temperature
97	CWS-GPM	Chilled Water Supply GPM
98	CWS-T	Chilled Water Supply Temperature
99	DHW-SET	Domestic Hot Water Set Point
100	DHWS-T	Domestic Hot Water Supply Temperature
101	DHW-TANK	Domestic Hot Water Tank Temperature
102	DHW-VLV	Domestic Hot Water Steam Valve
103	ELEC-HEAT	Electric Heat
104	FLTR-DP	Filter Differential Pressure
105	FLTR-S	Air Filter Differential
106	HD-T	Hot Deck Temperature
107	HTG1-C	Heating Stage 1 Command

EMCS Equipment and Points Nomenclature for Camp Lejeune

No.	Nomenclature	Description
	POINTS	
108	HTG2-C	Heating Stage 2 Command
109	HTGMAX	Heating Maximum Set Point
110	HTG-NITE	Heating Night Set Point
111	HTG-SP	Heating Set Point
112	HTGV-CMD	Heating Command
113	HTG-VLV	Heating Valve
114	HUM-SPT	Humidity Set Point
115	HW-ENA	Hot Water Enable
116	HWP-1-C	Hot Water Pump 1 Command
117	HWP-SPT	Hot Water Pump Set Point
118	HWP-SS	Hot Water Pump Status
119	HWR-T	Hot Water Return Temperature
120	HW-SET	Hot Water Reset Set Point
121	HWS-FL	Hot Water Supply Flow
122	HWS-P	Hot Water Supply Pressure
123	HWS-SPT	Hot Water Supply Set Point
124	HWS-T	Hot Water Supply Temperature
125	HW-SYS ENABLE	Hot Water System Enable
126	HWVLV-C	Hot Water Valve Command
127	HX-VLV	Heat Exchanger Valve
128	IA-H	Indoor Humidity Sensor
129	INST-DMD	Instantaneous Demand
130	INTV-DMD	Interval Demand
131	LOOPR-T	Loop Return Temperature
132	LOOPS-T	Loop Supply Temperature
133	LPMP-1-C	Loop Pump 1 Command
134	MAD-CMD	Mixed Air Damper Command
135	MA-T	Mixed Air Temperature
136	MAX-CLG	Maximum Cooling Set Point
137	MAX-HTG	Maximum Heating Set Point
138	MIN-HTG	Minimum Heating Set Point
139	MIN-OAD	Minimum Outside Air Damper
140	OA-CFM	Outside Air Cubic Feet Per Minute
141	OAD-C	Outside Air Damper Position
142	OAD-SET	Outside Air Damper Set Point
143	OAF-C	Outside Air Fan Command
144	OAF-S	Outside Air Fan Status
145	OA-H	Outside Humidity Sensor
146	OA-RH	Outside Air Relative Humidity
147	OA-T	Outside Air Temperature
148	OCC-CLG	Occupied Cooling
149	OCC-HTG	Occupied Heating
150	OCCTIME	Occupied Time (Schedule)
151	OCCTIMER	Occupied Timer (Schedule)
152	OCLG-SP	Occupied Cooling Set Point
153	OHTG-SP]	Occupied Heating Set Point
154	OHWP-SPT	Occupied Hot Water Sump Set Point

EMCS Equipment and Points Nomenclature for Camp Lejeune

No.	Nomenclature	Description
	POINTS	
155	PH-LEV	PH Level
156	PH-SET	PH Set Point
157	PWR-FAIL	Power Fail
158	PWR-MTR	Power Meter
159	RAD-C	Return Air Damper Position
160	RAF-C	Return Air Fan Command
161	RAF-S	Return Air Fan Status
162	RA-T	Return Air Temperature
163	REV-VLV	Reversing Valve
164	RM-T	Room Temperature
165	SA-SMKD-C	Smoke Detector Command
166	SA-SMK-S	Smoke Detector Status
167	SA-SP	Supply Air Set Point
168	SA-T	Supply Air Temperature
169	SETPNT1	Set Point 1
170	SETPNT2	Set Point 2
171	SF-C	Supply Fan Command
172	SF-S	Supply Fan Status
173	SF-VFD	Supply Fan Variable Frequency Drive
174	SHDN-CMD	Shutdown Command
175	SMK-S	Duct Smoke Detector
176	STM-C	Steam Command
177	STM-S	Steam Pressure
178	STM-T	Steam Temperature
179	STM-VLV	Steam Valve Operation
180	STM-VLV	Steam Valve Status
181	SUMMER	Summer Mode
182	SUMWIN-C	Summer/Winter Command
183	TANK-L-A	Tank Level
184	TOTAL-KW	Total Kilowatt (kW)
185	TOTLFLOW	Total Flow
186	TRIPLOCK	Trip Lock Out
187	TWR-CMD	Tower Command
188	UH-ENA	Unit Heater Enable
189	UH-SPT	Unit Heater Set Point
190	UNOCC-CLG	Unoccupied Cooling
191	UNOCC-HTG	Unoccupied Heating
192	VFD-S	Variable Frequency Drive Status
193	WINDO-AC	Window Air Conditioner
194	WINTER	Winter Mode
195	WSHP-SPT	Water Source Heat Pump Set Point
196	ZNHTG-SP	Zone Heating Set Point
197	ZN-T	Space/Zone Temperature

THIS PAGE HAS BEEN INTENTIONALLY LEFT BLANK

SECTION 23 23 00

REFRIGERANT PIPING
10/07

PART 1 GENERAL

1.1 REFERENCES

The publications listed below form a part of this specification to the extent referenced. The publications are referred to within the text by the basic designation only.

AIR-CONDITIONING, HEATING AND REFRIGERATION INSTITUTE (AHRI)

AHRI 710 I-P	(2009) Performance Rating of Liquid-Line Driers
AHRI 720	(2002) Refrigerant Access Valves and Hose Connectors
AHRI 750 I-P	(2016) Performance Rating of Thermostatic Refrigerant Expansion Valves
ANSI/AHRI 760	(2007) Performance Rating of Solenoid Valves for Use With Volatile Refrigerants

AMERICAN SOCIETY OF HEATING, REFRIGERATING AND AIR-CONDITIONING ENGINEERS (ASHRAE)

ASHRAE 15 & 34	(2013; Addenda A 2014; ERTA 1 2014; Addenda A-T AND SUPP 2015; ERTA 2 2015; INT 1 2015; ERTA 3 2015; ERTA 4 2016; INT 2-3 2016) ANSI/ASHRAE Standard 15-Safety Standard for Refrigeration Systems and ANSI/ASHRAE Standard 34-Designation and Safety Classification of Refrigerants
ASHRAE 17	(2008) Method of Testing Capacity of Thermostatic Refrigerant Expansion Valves

AMERICAN WELDING SOCIETY (AWS)

AWS A5.8/A5.8M	(2011; Amendment 2012) Specification for Filler Metals for Brazing and Braze Welding
AWS BRH	(2007; 5th Ed) Brazing Handbook
AWS Z49.1	(2012) Safety in Welding and Cutting and Allied Processes

AMERICAN SOCIETY OF MECHANICAL ENGINEERS (ASME)

ASME B16.22	(2013) Standard for Wrought Copper and Copper Alloy Solder Joint Pressure Fittings
ASME B16.26	(2018) Standard for Cast Copper Alloy

	Fittings for Flared Copper Tubes
ASME B31.1	(2016) Power Piping
ASME B31.5	(2016) Refrigeration Piping and Heat Transfer Components
ASME B40.100	(2013) Pressure Gauges and Gauge Attachments
ASME BPVC SEC IX	(2010) BPVC Section IX-Welding and Brazing Qualifications

ASTM INTERNATIONAL (ASTM)

ASTM A53/A53M	(2018) Standard Specification for Pipe, Steel, Black and Hot-Dipped, Zinc-Coated, Welded and Seamless
ASTM A653/A653M	(2015; E 2016) Standard Specification for Steel Sheet, Zinc-Coated (Galvanized) or Zinc-Iron Alloy-Coated (Galvannealed) by the Hot-Dip Process
ASTM B117	(2016) Standard Practice for Operating Salt Spray (Fog) Apparatus
ASTM B280	(2016) Standard Specification for Seamless Copper Tube for Air Conditioning and Refrigeration Field Service
ASTM B32	(2008; R 2014) Standard Specification for Solder Metal
ASTM B62	(2015) Standard Specification for Composition Bronze or Ounce Metal Castings
ASTM B75/B75M	(2011) Standard Specification for Seamless Copper Tube
ASTM B813	(2016) Standard Specification for Liquid and Paste Fluxes for Soldering of Copper and Copper Alloy Tube
ASTM D3308	(2012) PTFE Resin Skived Tape
ASTM D520	(2000; R 2011) Zinc Dust Pigment

MANUFACTURERS STANDARDIZATION SOCIETY OF THE VALVE AND FITTINGS INDUSTRY (MSS)

MSS SP-58	(1993; Reaffirmed 2010) Pipe Hangers and Supports - Materials, Design and Manufacture, Selection, Application, and Installation

1.2 SUBMITTALS

Government approval is required for submittals with a "G" designation;

submittals not having a "G" designation are for Contractor Quality Control approval. Submittals with an "S" are for inclusion in the Sustainability Notebook, in conformance to Section 01 33 29 SUSTAINABILITY REPORTING. Submit the following in accordance with Section 01 33 00 SUBMITTAL PROCEDURES:

SD-02 Shop Drawings

Refrigerant Piping System; G

SD-03 Product Data

Refrigerant Piping System
Spare Parts
Qualifications
Refrigerant Piping Tests
Verification of Dimensions

SD-06 Test Reports

Refrigerant Piping Tests

SD-07 Certificates

Service Organization

SD-10 Operation and Maintenance Data

Maintenance; G
Operation and Maintenance Manuals; G

1.3 QUALITY ASSURANCE

1.3.1 Qualifications

Submit 6 copies of qualified procedures, and list of names and identification symbols of qualified welders and welding operators, prior to non-factory welding operations. Piping shall be welded in accordance with the qualified procedures using performance qualified welders and welding operators. Procedures and welders shall be qualified in accordance with ASME BPVC SEC IX. Welding procedures qualified by others, and welders and welding operators qualified by another employer may be accepted as permitted by ASME B31.1. Notify the Contracting Officer 24 hours in advance of tests to be performed at the work site, if practical. The welder or welding operator shall apply the personally assigned symbol near each weld made, as a permanent record.

1.3.2 Contract Drawings

Because of the small scale of the drawings, it is not possible to indicate all offsets, fittings, and accessories that may be required. Carefully investigate the plumbing, fire protection, electrical, structural and finish conditions that would affect the work to be performed and arrange such work accordingly, furnishing required offsets, fittings, and accessories to meet such conditions.

1.4 DELIVERY, STORAGE, AND HANDLING

Protect stored items from the weather, humidity and temperature

variations, dirt and dust, or other contaminants. Proper protection and care of all material both before and during installation is the Contractor's responsibility. Replace any materials found to be damaged at the Contractor's expense. During installation, cap piping and similar openings to keep out dirt and other foreign matter.

1.5 MAINTENANCE

1.5.1 General

Submit Data Package 2 plus operation and maintenance data complying with the requirements of Section 01 78 23 OPERATION AND MAINTENANCE DATA and 01 78 24.00 20 FACILITY ELECTRONIC OPERATION AND MAINTENANCE SUPPORT INFORMATION (eOMSI), and as specified herein.

1.5.2 Extra Materials

Submit spare parts data for each different item of equipment specified, after approval of detail drawings and not later than 3 months prior to the date of beneficial occupancy. The data shall include a complete list of parts and supplies, with current unit prices and source of supply, a recommended spare parts list for 1 year of operation, and a list of the parts recommended by the manufacturer to be replaced on a routine basis.

PART 2 PRODUCTS

2.1 STANDARD COMMERCIAL PRODUCTS

a. Provide materials and equipment which are standard products of a manufacturer regularly engaged in the manufacturing of such products, that are of a similar material, design and workmanship and that have been in satisfactory commercial or industrial use for 2 years prior to bid opening.

b. The 2 year use shall include applications of equipment and materials under similar circumstances and of similar size. The 2 years experience shall be satisfactorily completed by a product which has been sold or is offered for sale on the commercial market through advertisements, manufacturer's catalogs, or brochures. Products having less than a 2 year field service record will be acceptable if a certified record of satisfactory field operation, for not less than 6000 hours exclusive of the manufacturer's factory tests, can be shown.

c. Products shall be supported by a service organization. System components shall be environmentally suitable for the indicated locations. Submit a certified list of qualified permanent service organizations for support of the equipment which includes their addresses and qualifications. The service organizations shall be reasonably convenient to the equipment installation and be able to render satisfactory service to the equipment on a regular and emergency basis during the warranty period of the contract.

d. Exposed equipment moving parts, parts that produce high operating temperature, parts which may be electrically energized, and parts that may be a hazard to operating personnel shall be insulated, fully enclosed, guarded, or fitted with other types of safety devices. Install safety devices so that proper operation of equipment is not impaired. Welding and cutting safety requirements shall be in accordance with AWS Z49.1.

e. Manufacturer's standard catalog data, at least 5 weeks prior to the purchase or installation of a particular component, highlighted to show material, size, options, performance charts and curves, etc. in adequate detail to demonstrate compliance with contract requirements. Include in the data manufacturer's recommended installation instructions and procedures. Provide data for the following components as a minimum:

(1) Piping and Fittings
(2) Valves
(3) Piping Accessories
(4) Pipe Hangers, Inserts, and Supports

2.2 ELECTRICAL WORK

Electrical equipment and wiring shall be in accordance with Section 26 20 00 INTERIOR DISTRIBUTION SYSTEM. Field wiring shall be in accordance with manufacturer's instructions. Manual or automatic control and protective or signal devices required for the operation specified and any control wiring required for controls and devices specified, but not shown, shall be provided.

2.3 REFRIGERANT PIPING SYSTEM

Refrigerant piping, valves, fittings, and accessories shall be in accordance with ASHRAE 15 & 34 and ASME B31.5, except as specified herein. Refrigerant piping, valves, fittings, and accessories shall be compatible with the fluids used and capable of withstanding the pressures and temperatures of the service. Refrigerant piping, valves, and accessories used for refrigerant service shall be cleaned, dehydrated, and sealed (capped or plugged) prior to shipment from the manufacturer's plant. Submit drawings, at least 5 weeks prior to beginning construction, provided in adequate detail to demonstrate compliance with contract requirements. Drawings shall consist of:

a. Piping layouts which identify all valves and fittings.

b. Plans and elevations which identify clearances required for maintenance and operation.

2.4 PIPE, FITTINGS AND END CONNECTIONS (JOINTS)

2.4.1 Copper Tubing

Copper tubing shall conform to ASTM B280 annealed or hard drawn as required. Copper tubing shall be soft annealed where bending is required and hard drawn where no bending is required. Soft annealed copper tubing shall not be used in sizes larger than 1-3/8 inches. Joints shall be brazed except that joints on lines 7/8 inchand smaller may be flared. Cast copper alloy fittings for flared copper tube shall conform to ASME B16.26 and ASTM B62. Wrought copper and bronze solder-joint pressure fittings shall conform to ASME B16.22 and ASTM B75/B75M. Joints and fittings for brazed joint shall be wrought-copper or forged-brass sweat fittings. Cast sweat-type joints and fittings shall not be allowed for brazed joints. Brass or bronze adapters for brazed tubing may be used for connecting tubing to flanges and to threaded ends of valves and equipment.

2.4.2 Solder

Solder shall conform to ASTM B32, grade Sb5, tin-antimony alloy for service pressures up to 150 psig. Solder flux shall be liquid or paste form, non-corrosive and conform to ASTM B813.

2.4.3 Brazing Filler Metal

Filler metal shall conform to AWS A5.8/A5.8M, Type BAg-5 with AWS Type 3 flux, except Type BCuP-5 or BCuP-6 may be used for brazing copper-to-copper joints.

2.5 VALVES

Valves shall be designed, manufactured, and tested specifically for refrigerant service. Valve bodies shall be of brass, bronze, steel, or ductile iron construction. Valves 1 inch and smaller shall have brazed or socket welded connections. Valves larger than 1 inch shall have tongue-and-groove flanged end connections. Threaded end connections shall not be used, except in pilot pressure or gauge lines where maintenance disassembly is required and welded flanges cannot be used. Internal parts shall be removable for inspection or replacement without applying heat or breaking pipe connections. Valve stems exposed to the atmosphere shall be stainless steel or corrosion resistant metal plated carbon steel. Direction of flow shall be legibly and permanently indicated on the valve body. Control valve inlets shall be fitted with integral or adapted strainer or filter where recommended or required by the manufacturer. Purge, charge and receiver valves shall be of manufacturer's standard configuration.

2.5.1 Refrigerant Stop Valves

Valve shall be the globe or full-port ball type with a back-seating stem especially packed for refrigerant service. Valve packing shall be replaceable under line pressure. Valve shall be provided with a wrench operator and a seal cap. Valve shall be the straight or angle pattern design as indicated.

2.5.2 Check Valves

Valve shall be the swing or lift type as required to provide positive shutoff at the differential pressure indicated. Valve shall be provide with resilient seat.

2.5.3 Liquid Solenoid Valves

Valves shall comply with ANSI/AHRI 760 and be suitable for continuous duty with applied voltages 15 percent under and 5 percent over nominal rated voltage at maximum and minimum encountered pressure and temperature service conditions. Valves shall be direct-acting or pilot-operating type, packless, except that packed stem, seal capped, manual lifting provisions shall be furnished. Solenoid coils shall be moisture-proof, UL approved, totally encapsulated or encapsulated and metal jacketed as required. Valves shall have safe working pressure of 400 psi and a maximum operating pressure differential of at least 200 psi at 85 percent rated voltage. Valves shall have an operating pressure differential suitable for the refrigerant used.

2.5.4 Expansion Valves

Valve shall conform to AHRI 750 I-P and ASHRAE 17. Valve shall be the diaphragm and spring-loaded type with internal or external equalizers, and bulb and capillary tubing. Valve shall be provided with an external superheat adjustment along with a seal cap. Internal equalizers may be utilized where flowing refrigerant pressure drop between outlet of the valve and inlet to the evaporator coil is negligible and pressure drop across the evaporator is less than the pressure difference corresponding to 2 degrees F of saturated suction temperature at evaporator conditions. Bulb charge shall be determined by the manufacturer for the application and such that liquid will remain in the bulb at all operating conditions. Gas limited liquid charged valves and other valve devices for limiting evaporator pressure shall not be used without a distributor or discharge tube or effective means to prevent loss of control when bulb becomes warmer than valve body. Pilot-operated valves shall have a characterized plug to provide required modulating control. A de-energized solenoid valve may be used in the pilot line to close the main valve in lieu of a solenoid valve in the main liquid line. An isolatable pressure gauge shall be provided in the pilot line, at the main valve. Automatic pressure reducing or constant pressure regulating expansion valves may be used only where indicted or for constant evaporator loads.

2.5.5 Safety Relief Valves

Valve shall be the two-way type, unless indicated otherwise. Valve shall bear the ASME code symbol. Valve capacity shall be certified by the National Board of Boiler and Pressure Vessel Inspectors. Valve shall be of an automatically reseating design after activation.

2.5.6 Evaporator Pressure Regulators, Direct-Acting

Valve shall include a diaphragm/spring assembly, external pressure adjustment with seal cap, and pressure gauge port. Valve shall maintain a constant inlet pressure by balancing inlet pressure on diaphragm against an adjustable spring load. Pressure drop at system design load shall not exceed the pressure difference corresponding to a 2 degrees F change in saturated refrigerant temperature at evaporator operating suction temperature. Spring shall be selected for indicated maximum allowable suction pressure range.

2.5.7 Refrigerant Access Valves

Refrigerant access valves and hose connections shall be in accordance with AHRI 720.

2.6 PIPING ACCESSORIES

2.6.1 Filter Driers

Driers shall conform to AHRI 710 I-P. Sizes 5/8 inch and larger shall be the full flow, replaceable core type. Sizes 1/2 inch and smaller shall be the sealed type. Cores shall be of suitable desiccant that will not plug, cake, dust, channel, or break down, and shall remove water, acid, and foreign material from the refrigerant. Filter driers shall be constructed so that none of the desiccant will pass into the refrigerant lines. Minimum bursting pressure shall be 1,500 psi.

2.6.2 Sight Glass and Liquid Level Indicator

2.6.2.1 Assembly and Components

Assembly shall be pressure- and temperature-rated and constructed of materials suitable for the service. Glass shall be borosilicate type. Ferrous components subject to condensation shall be electro-galvanized.

2.6.2.2 Gauge Glass

Gauge glass shall include top and bottom isolation valves fitted with automatic checks, and packing followers; red-line or green-line gauge glass; elastomer or polymer packing to suit the service; and gauge glass guard.

2.6.2.3 Bull's-Eye and Inline Sight Glass Reflex Lens

Bull's-eye and inline sight glass reflex lens shall be provided for dead-end liquid service. For pipe line mounting, two plain lenses in one body suitable for backlighted viewing shall be provided.

2.6.2.4 Moisture Indicator

Indicator shall be a self-reversible action, moisture reactive, color changing media. Indicator shall be furnished with full-color-printing tag containing color, moisture and temperature criteria. Unless otherwise indicated, the moisture indicator shall be an integral part of each corresponding sight glass.

2.6.3 Strainers

Strainers used in refrigerant service shall have brass body, Y-or angle-pattern, cleanable, not less than 60-mesh noncorroding screen of an area to provide net free area not less than ten times the pipe diameter with pressure rating compatible with the refrigerant service. Screens shall be stainless steel and reinforced spring-loaded where necessary for bypass-proof construction.

2.6.4 Pressure and Vacuum Gauges

Gauges shall conform to ASME B40.100 and shall be provided with throttling type needle valve or a pulsation dampener and shut-off valve. Gauge shall be a minimum of 3-1/2 inches in diameter with a range from 0 psig to approximately 1.5 times the maximum system working pressure. Each gauge range shall be selected so that at normal operating pressure, the needle is within the middle-third of the range.

2.6.5 Temperature Gauges

Temperature gauges shall be the industrial duty type and be provided for the required temperature range. Gauges shall have Fahrenheit scale in 2 degrees graduations scale (black numbers) on a white face. The pointer shall be adjustable. Rigid stem type temperature gauges shall be provided in thermal wells located within 5 feet of the finished floor. Universal adjustable angle type or remote element type temperature gauges shall be provided in thermal wells located 5 to 7 feet above the finished floor. Remote element type temperature gauges shall be provided in thermal wells located 7 feet above the finished floor.

2.6.5.1 Stem Cased-Glass

Stem cased-glass case shall be polished stainless steel or cast aluminum,

9 inches long, with clear acrylic lens, and non-mercury filled glass tube with indicating-fluid column.

2.6.5.2 Bimetallic Dial

Bimetallic dial type case shall be not less than 3-1/2 inches, stainless steel, and shall be hermetically sealed with clear acrylic lens. Bimetallic element shall be silicone dampened and unit fitted with external calibrator adjustment. Accuracy shall be one percent of dial range.

2.6.5.3 Liquid-, Solid-, and Vapor-Filled Dial

Liquid-, solid-, and vapor-filled dial type cases shall be not less than 3-1/2 inches, stainless steel or cast aluminum with clear acrylic lens. Fill shall be nonmercury, suitable for encountered cross-ambients, and connecting capillary tubing shall be double-braided bronze.

2.6.5.4 Thermal Well

Thermal well shall be identical size, 1/2 or 3/4 inch NPT connection, brass or stainless steel. Where test wells are indicated, provide captive plug-fitted type 1/2 inch NPT connection suitable for use with either engraved stem or standard separable socket thermometer or thermostat. Mercury shall not be used in thermometers. Extended neck thermal wells shall be of sufficient length to clear insulation thickness by 1 inch.

2.6.6 Pipe Hangers, Inserts, and Supports

Pipe hangers, inserts, guides, and supports shall conform to MSS SP-58, types 1, 7, or 10, except as indicated otherwise. Type 40 shields to be used on all insulated piping.

2.6.7 Escutcheons

Escutcheons shall be chromium-plated iron or chromium-plated brass, either one piece or split pattern, held in place by internal spring tension or set screws.

2.7 FABRICATION

2.7.1 Factory Coating

Unless otherwise specified, equipment and component items, when fabricated from ferrous metal, shall be factory finished with the manufacturer's standard finish, except that items located outside of buildings shall have weather resistant finishes that will withstand 3000 hours exposure to the salt spray test specified in ASTM B117 using a 5 percent sodium chloride solution. Immediately after completion of the test, the specimen shall show no signs of blistering, wrinkling, cracking, or loss of adhesion and no sign of rust creepage beyond 1/8 inch on either side of the scratch mark. Cut edges of galvanized surfaces where hot-dip galvanized sheet steel is used shall be coated with a zinc-rich coating conforming to ASTM D520, Type I.

PART 3 EXECUTION

3.1 EXAMINATION

After becoming familiar with all details of the work, perform a verification of dimensions in the field. Submit a letter, at least 2 weeks prior to beginning construction, including the date the site was visited, conformation of existing conditions, and any discrepancies found before performing any work.

3.2 INSTALLATION

Pipe and fitting installation shall conform to the requirements of ASME B31.1. Cut pipe accurately to measurements established at the jobsite, and work into place without springing or forcing, completely clearing all windows, doors, and other openings. Cutting or other weakening of the building structure to facilitate piping installation are not permitted without written approval. Cut pipe or tubing square, removeremoved by reaming, and permit free expansion and contraction without causing damage to the building structure, pipe, joints, or hangers.

3.2.1 Directional Changes

Make changes in direction with fittings, except that bending of pipe 4 inches and smaller is permitted, provided a pipe bender is used and wide sweep bends are formed. Mitering or notching pipe or other similar construction to form elbows or tees is not permitted. The centerline radius of bends shall not be less than 6 diameters of the pipe. Bent pipe showing kinks, wrinkles, flattening, or other malformations will not be accepted.

3.2.2 Functional Requirements

Piping shall be installed 1/2 inch/10 feet of pipe in the direction of flow to ensure adequate oil drainage. Open ends of refrigerant lines or equipment shall be properly capped or plugged during installation to keep moisture, dirt, or other foreign material out of the system. Piping shall remain capped until installation. Equipment piping shall be in accordance with the equipment manufacturer's recommendations and the contract drawings. Equipment and piping arrangements shall fit into space allotted and allow adequate acceptable clearances for installation, replacement, entry, servicing, and maintenance.

3.2.3 Fittings and End Connections

3.2.3.1 Threaded Connections

Make threaded connections with tapered threads and make tight with PTFE tape complying with ASTM D3308 or equivalent thread-joint compound applied to the male threads only. Show not more than three threads after the joint is made.

3.2.3.2 Brazed Connections

Perform brazing in accordance with AWS BRH, except as modified herein. During brazing, fill the pipe and fittings with a pressure regulated inert gas, such as nitrogen, to prevent the formation of scale. Before brazing copper joints, clean both the outside of the tube and the inside of the fitting with a wire fitting brush until the entire joint surface is bright and clean. Do not use brazing flux. Remove surplus brazing material at all joints. Make steel tubing joints in accordance with the manufacturer's recommendations. Paint joints in steel tubing with the same material as the baked-on coating within 8 hours after joints are

made. Protect tubing against oxidation during brazing by continuous purging of the inside of the piping using nitrogen. Support piping prior to brazing and do not spring or force.

3.2.3.3 Flared Connections

When flared connections are used, a suitable lubricant shall be used between the back of the flare and the nut in order to avoid tearing the flare while tightening the nut.

3.2.4 Valves

3.2.4.1 General

Refrigerant stop valves shall be installed on each side of each piece of equipment such as compressors condensers, evaporators, receivers, and other similar items in multiple-unit installation, to provide partial system isolation as required for maintenance or repair. Stop valves shall be installed with stems horizontal unless otherwise indicated. Ball valves shall be installed with stems positioned to facilitate operation and maintenance. Isolating valves for pressure gauges and switches shall be external to thermal insulation. Safety switches shall not be fitted with isolation valves. Filter dryers having access ports may be considered a point of isolation. Purge valves shall be provided at all points of systems where accumulated noncondensable gases would prevent proper system operation. Valves shall be furnished to match line size, unless otherwise indicated or approved.

3.2.4.2 Expansion Valves

Expansion valves shall be installed with the thermostatic expansion valve bulb located on top of the suction line when the suction line is less than 2-1/8 inches in diameter and at the 4 o'clock or 8 o'clock position on lines larger than 2-1/8 inches. The bulb shall be securely fastened with two clamps. The bulb shall be insulated. The bulb shall installed in a horizontal portion of the suction line, if possible, with the pigtail on the bottom. If the bulb must be installed in a vertical line, the bulb tubing shall be facing up.

3.2.4.3 Valve Identification

Each system valve, including those which are part of a factory assembly, shall be tagged. Tags shall be in alphanumeric sequence, progressing in direction of fluid flow. Tags shall be embossed, engraved, or stamped plastic or nonferrous metal of various shapes, sized approximately 1-3/8 inch diameter, or equivalent dimension, substantially attached to a component or immediately adjacent thereto. Tags shall be attached with nonferrous, heavy duty, bead or link chain, 14 gauge annealed wire, nylon cable bands or as approved. Tag numbers shall be referenced in Operation and Maintenance Manuals and system diagrams.

3.2.5 Strainers

Strainers shall be provided immediately ahead of solenoid valves and expansion devices. Strainers may be an integral part of an expansion valve.

3.2.6 Filter Dryer

A liquid line filter dryer shall be provided on each refrigerant circuit located such that all liquid refrigerant passes through a filter dryer. Dryers shall be sized in accordance with the manufacturer's recommendations for the system in which it is installed. Dryers shall be installed such that it can be isolated from the system, the isolated portion of the system evacuated, and the filter dryer replaced. Dryers shall be installed in the horizontal position except replaceable core filter dryers may be installed in the vertical position with the access flange on the bottom.

3.2.7 Sight Glass

A moisture indicating sight glass shall be installed in all refrigerant circuits down stream of all filter dryers. Site glasses shall be full line size.

3.2.8 Discharge Line Oil Separator

Discharge line oil separator shall be provided in the discharge line from each compressor. Oil return line shall be connected to the compressor as recommended by the compressor manufacturer.

3.2.9 Accumulator

Accumulators shall be provided in the suction line to each compressor if not provided by the manufacturer of the equipment.

3.2.10 Temperature Gauges

Temperature gauges shall be located specifically on, but not limited to the following: Thermal wells for insertion thermometers and thermostats shall extend beyond thermal insulation surface not less than 1 inch.

3.2.11 Pipe Hangers, Inserts, and Supports

Pipe hangers, inserts, and supports shall conform to MSS SP-58, except as modified herein. Pipe hanger types 5, 12, and 26 shall not be used. Hangers used to support piping 2 inches and larger shall be fabricated to permit adequate adjustment after erection while still supporting the load. Piping subjected to vertical movement, when operating temperatures exceed ambient temperatures, shall be supported by variable spring hangers and supports or by constant support hangers.

3.2.11.1 Hangers

Do not use Type 3 on insulated piping. Type 24 may be used only on trapeze hanger systems or on fabricated frames.

3.2.11.2 Inserts

Secure Type 18 inserts to concrete forms before concrete is placed. Continuous inserts which allow more adjustments may be used if they otherwise meet the requirements for Type 18 inserts.

3.2.11.3 C-Clamps

Torque Type 19 and 23 C-clamps in accordance with MSS SP-58 and have both locknuts and retaining devices, furnished by the manufacturer. Field-fabricated C-clamp bodies or retaining devices are not acceptable.

3.2.11.4 Angle Attachments

Type 20 attachments used on angles and channels shall be furnished with an added malleable-iron heel plate or adapter.

3.2.11.5 Saddles and Shields

Where Type 39 saddle or Type 40 shield are permitted for a particular pipe attachment application, the Type 39 saddle, connected to the pipe, shall be used on all pipe 4 inches and larger when the temperature of the medium is 60 degrees F or higher. Type 40 shields shall be used on all piping less than 4 inches and all piping 4 inches and larger carrying medium less than 60 degrees F. A high density insulation insert of cellular glass shall be used under the Type 40 shield for piping 2 inches and larger.

3.2.11.6 Horizontal Pipe Supports

Horizontal pipe supports shall be spaced as specified in MSS SP-58 and a support shall be installed not over 1 foot from the pipe fitting joint at each change in direction of the piping. Pipe supports shall be spaced not over 5 feet apart at valves. Pipe hanger loads suspended from steel joist with hanger loads between panel points in excess of 50 pounds shall have the excess hanger loads suspended from panel points.

3.2.11.7 Vertical Pipe Supports

Vertical pipe shall be supported at each floor, except at slab-on-grade, and at intervals of not more than 15 feet not more than 8 feet from end of risers, and at vent terminations.

3.2.11.8 Pipe Guides

Type 35 guides using, steel, reinforced polytetrafluoroethylene (PTFE) or graphite slides shall be provided where required to allow longitudinal pipe movement. Lateral restraints shall be provided as required. Slide materials shall be suitable for the system operating temperatures, atmospheric conditions, and bearing loads encountered.

3.2.11.9 Steel Slides

Where steel slides do not require provisions for restraint of lateral movement, an alternate guide method may be used. On piping 4 inches and larger, a Type 39 saddle shall be used. On piping under 4 inches, a Type 40 protection shield may be attached to the pipe or insulation and freely rest on a steel slide plate.

3.2.11.10 High Temperature Guides with Cradles

Where there are high system temperatures and welding to piping is not desirable, then the Type 35 guide shall include a pipe cradle, welded to the guide structure and strapped securely to the pipe. The pipe shall be separated from the slide material by at least 4 inches, or by an amount adequate for the insulation, whichever is greater.

3.2.11.11 Multiple Pipe Runs

In the support of multiple pipe runs on a common base member, a clip or clamp shall be used where each pipe crosses the base support member.

Spacing of the base support members shall not exceed the hanger and support spacing required for an individual pipe in the multiple pipe run.

3.2.11.12 Structural Attachments

Attachment to building structure concrete and masonry shall be by cast-in concrete inserts, built-in anchors, or masonry anchor devices. Inserts and anchors shall be applied with a safety factor not less than 5. Supports shall not be attached to metal decking. Masonry anchors for overhead applications shall be constructed of ferrous materials only. Structural steel brackets required to support piping, headers, and equipment, but not shown, shall be provided under this section. Material used for support shall be as specified under Section 05 12 00 STRUCTURAL STEEL.

3.2.12 Pipe Alignment Guides

Pipe alignment guides shall be provided where indicated for expansion loops, offsets, and bends and as recommended by the manufacturer for expansion joints, not to exceed 5 feet on each side of each expansion joint, and in lines 4 inches or smaller not more than 2 feet on each side of the joint.

3.2.13 Pipe Anchors

Anchors shall be provided wherever necessary or indicated to localize expansion or to prevent undue strain on piping. Anchors shall consist of heavy steel collars with lugs and bolts for clamping and attaching anchor braces, unless otherwise indicated. Anchor braces shall be installed in the most effective manner to secure the desired results using turnbuckles where required. Supports, anchors, or stays shall not be attached where they will injure the structure or adjacent construction during installation or by the weight of expansion of the pipeline. Where pipe and conduit penetrations of vapor barrier sealed surfaces occur, these items shall be anchored immediately adjacent to each penetrated surface, to provide essentially zero movement within penetration seal. Detailed drawings of pipe anchors shall be submitted for approval before installation.

3.2.14 Building Surface Penetrations

Sleeves shall not be installed in structural members except where indicated or approved. Sleeves in nonload bearing surfaces shall be galvanized sheet metal, conforming to ASTM A653/A653M, Coating Class G-90, 20 gauge. Sleeves in load bearing surfaces shall be uncoated carbon steel pipe, conforming to ASTM A53/A53M, Schedule 40 . Sealants shall be applied to moisture and oil-free surfaces and elastomers to not less than 1/2 inch depth. Sleeves shall not be installed in structural members.

3.2.14.1 General Service Areas

Each sleeve shall extend through its respective wall, floor, or roof, and shall be cut flush with each surface. Pipes passing through concrete or masonry wall or concrete floors or roofs shall be provided with pipe sleeves fitted into place at the time of construction. Sleeves shall be of such size as to provide a minimum of 1/4 inch all-around clearance between bare pipe and sleeves or between jacketed-insulation and sleeves. Except in pipe chases or interior walls, the annular space between pipe and sleeve or between jacket over-insulation and sleeve shall be sealed in

accordance with Section 07 92 00 JOINT SEALANTS.

3.2.14.2 Escutcheons

Finished surfaces where exposed piping, bare or insulated, pass through floors, walls, or ceilings, except in boiler, utility, or equipment rooms, shall be provided with escutcheons. Where sleeves project slightly from floors, special deep-type escutcheons shall be used. Escutcheon shall be secured to pipe or pipe covering.

3.2.15 Access Panels

Access panels shall be provided for all concealed valves, vents, controls, and items requiring inspection or maintenance. Access panels shall be of sufficient size and located so that the concealed items may be serviced and maintained or completely removed and replaced. Access panels shall be as specified in Section 05 50 13 MISCELLANEOUS METAL FABRICATIONS.

3.2.16 Field Applied Insulation

Field installed insulation shall be as specified in Section 23 07 00 THERMAL INSULATION FOR MECHANICAL SYSTEMS, except as defined differently herein.

3.2.17 Field Painting

Painting required for surfaces not otherwise specified, and finish painting of items only primed at the factory are specified in Section 09 90 00 PAINTS AND COATINGS.

3.2.17.1 Color Coding

Color coding for piping identification is specified in Section 09 90 00 PAINTS AND COATINGS.

3.2.17.2 Color Coding Scheme

A color coding scheme for locating hidden piping shall be in accordance with Section 22 00 00 PLUMBING, GENERAL PURPOSE.

3.2.18 Identification Tags

Provide identification tags made of brass, engraved laminated plastic or engraved anodized aluminum indicating service and item number on all valves and dampers. Tags shall be 1-3/8 inch minimum diameter and marking shall be stamped or engraved. Indentations shall be black for reading clarity. Tags shall be attached to valves with No. 12 AWG copper wire, chrome-plated beaded chain or plastic straps designed for that purpose.

3.3 CLEANING AND ADJUSTING

Clean uncontaminated system(s) by evacuation and purging procedures currently recommended by refrigerant and refrigerant equipment manufacturers, and as specified herein, to remove small amounts of air and moisture. Systems containing moderate amounts of air, moisture, contaminated refrigerant, or any foreign matter shall be considered contaminated systems. Restoring contaminated systems to clean condition including disassembly, component replacement, evacuation, flushing, purging, and re-charging, shall be performed using currently approved

refrigerant and refrigeration manufacturer's procedures. Restoring contaminated systems shall be at no additional cost to the Government as determined by the Contracting Officer. Water shall not be used in any procedure or test.

3.4 OPERATION AND MAINTENANCE MANUALS

Submit operation and maintenance information listing step-by-step procedures required for system startup, operation, abnormal shutdown, emergency shutdown, and normal shutdown at least 4 weeks prior to the first training course. Provide the manufacturer's name, model number, and parts list. Include the manufacturer's name, model number, service manual, and a brief description of all equipment and their basic operating features. Submit in accordance with Section 01 78 23 OPERATION AND MAINTENANCE DATA and 01 78 24.00 20 FACILITY ELECTRONIC OPERATION AND MAINTENANCE SUPPORT INFORMATION (eOMSI)

3.5 REFRIGERANT PIPING TESTS

After all components of the refrigerant system have been installed and connected, subject the entire refrigeration system to pneumatic, evacuation, and startup tests as described herein. Submit a schedule, at least 2 weeks prior to the start of related testing, for each test. Identify the proposed date, time, and location for each test. Conduct tests in the presence of the Contracting Officer. Water and electricity required for the tests will be furnished by the Government. Provide all material, equipment, instruments, and personnel required for the test. Provide the services of a qualified technician, as required, to perform all tests and procedures indicated herein. Field tests shall be coordinated with Section 23 05 93.00 22 TESTING, ADJUSTING, AND BALANCING OF MECHANICAL SYSTEMS. Submit 6 copies of the tests report in bound 8 1/2 by 11 inch booklets documenting all phases of the tests performed. The report shall include initial test summaries, all repairs/adjustments made, and the final test results.

3.5.1 Preliminary Procedures

Prior to pneumatic testing, equipment which has been factory tested and refrigerant charged as well as equipment which could be damaged or cause personnel injury by imposed test pressure, positive or negative, shall be isolated from the test pressure or removed from the system. Safety relief valves and rupture discs, where not part of factory sealed systems, shall be removed and openings capped or plugged.

3.5.2 Pneumatic Test

Pressure control and excess pressure protection shall be provided at the source of test pressure. Valves shall be wide open, except those leading to the atmosphere. Test gas shall be dry nitrogen, with minus 70 degree F dewpoint and less than 5 ppm oil. Test pressure shall be applied in two stages before any refrigerant pipe is insulated or covered. First stage test shall be at 10 psi with every joint being tested with a thick soap or color indicating solution. Second stage tests shall raise the system to the minimum refrigerant leakage test pressure specified in ASHRAE 15 & 34 with a maximum test pressure 25 percent greater. Pressure above 100 psig shall be raised in 10 percent increments with a pressure acclimatizing period between increments. The initial test pressure shall be recorded along with the ambient temperature to which the system is exposed. Final test pressures of the second stage shall be maintained on the system for a

minimum of 24 hours. At the end of the 24 hour period, the system pressure will be recorded along with the ambient temperature to which the system is exposed. A correction factor of 0.3 psi will be allowed for each degree F change between test space initial and final ambient temperature, plus for increase and minus for a decrease. If the corrected system pressure is not exactly equal to the initial system test pressure, then the system shall be investigated for leaking joints. To repair leaks, the joint shall be taken apart, thoroughly cleaned, and reconstructed as a new joint. Joints repaired by caulking, remelting, or back-welding/brazing shall not be acceptable. Following repair, the entire system shall be retested using the pneumatic tests described above. The entire system shall be reassembled once the pneumatic tests are satisfactorily completed.

3.5.3 Evacuation Test

Following satisfactory completion of the pneumatic tests, the pressure shall be relieved and the entire system shall be evacuated to an absolute pressure of 300 micrometers. During evacuation of the system, the ambient temperature shall be higher than 35 degrees F. No more than one system shall be evacuated at one time by one vacuum pump. Once the desired vacuum has been reached, the vacuum line shall be closed and the system shall stand for 1 hour. If the pressure rises over 500 micrometers after the 1 hour period, then the system shall be evacuated again down to 300 micrometers and let set for another 1 hour period. The system shall not be charged until a vacuum of at least 500 micrometers is maintained for a period of 1 hour without the assistance of a vacuum line. If during the testing the pressure continues to rise, check the system for leaks, repair as required, and repeat the evacuation procedure. During evacuation, pressures shall be recorded by a thermocouple-type, electronic-type, or a calibrated-micrometer type gauge.

3.5.4 System Charging and Startup Test

Following satisfactory completion of the evacuation tests, the system shall be charged with the required amount of refrigerant by raising pressure to normal operating pressure and in accordance with manufacturer's procedures. Following charging, the system shall operate with high-side and low-side pressures and corresponding refrigerant temperatures, at design or improved values. The entire system shall be tested for leaks. Fluorocarbon systems shall be tested with halide torch or electronic leak detectors.

3.5.5 Refrigerant Leakage

If a refrigerant leak is discovered after the system has been charged, the leaking portion of the system shall immediately be isolated from the remainder of the system and the refrigerant pumped into the system receiver or other suitable container. Under no circumstances shall the refrigerant be discharged into the atmosphere.

3.5.6 Contractor's Responsibility

At all times during the installation and testing of the refrigeration system, take steps to prevent the release of refrigerants into the atmosphere. The steps shall include, but not be limited to, procedures which will minimize the release of refrigerants to the atmosphere and the use of refrigerant recovery devices to remove refrigerant from the system and store the refrigerant for reuse or reclaim. At no time shall more than

3 ounces of refrigerant be released to the atmosphere in any one occurrence. Any system leaks within the first year shall be repaired in accordance with the requirements herein at no cost to the Government including material, labor, and refrigerant if the leak is the result of defective equipment, material, or installation.

-- End of Section --

SECTION 23 81 00.00 20

UNITARY AIR CONDITIONING EQUIPMENT
11/09

PART 1 GENERAL

1.1 REFERENCES

The publications listed below form a part of this specification to the extent referenced. The publications are referred to within the text by the basic designation only.

AIR MOVEMENT AND CONTROL ASSOCIATION INTERNATIONAL (AMCA)

AMCA 511	(2010) Certified Ratings Program for Air Control Devices

AIR-CONDITIONING, HEATING AND REFRIGERATION INSTITUTE (AHRI)

AHRI 1060 I-P	(2014) Performance Rating of Air-to-Air Heat Exchangers for Energy Recovery Ventilation Heat Equipment
AHRI 430	(2009) Central-Station Air-Handling Units
AHRI DCUP	(Online) Directory of Certified Unitary Products
ANSI/AHRI 210/240	(2008; Add 1 2011; Add 2 2012) Performance Rating of Unitary Air-Conditioning & Air-Source Heat Pump Equipment
ANSI/AHRI 340/360	(2007; Addendum 1 2010; Addendum 2 2011) Performance Rating of Commercial and Industrial Unitary Air-Conditioning and Heat Pump Equipment

AMERICAN SOCIETY OF HEATING, REFRIGERATING AND AIR-CONDITIONING ENGINEERS (ASHRAE)

ANSI/ASHRAE 15 & 34	(2016) ANSI/ASHRAE Standard 15-Safety Standard for Refrigeration Systems and ANSI/ASHRAE Standard 34-Designation and Safety Classification of Refrigerants
ASHRAE 52.2	(2012) Method of Testing General Ventilation Air-Cleaning Devices for Removal Efficiency by Particle Size
ASHRAE 55	(2013) Thermal Environmental Conditions for Human Occupancy
ASHRAE 62.1	(2010) Ventilation for Acceptable Indoor Air Quality
ASHRAE 84	(2013; Addenda A 2013) Method of Testing Air-to-Air Heat Exchangers

ASHRAE 90.1 - IP	(2013) Energy Standard for Buildings Except Low-Rise Residential Buildings

AMERICAN WELDING SOCIETY (AWS)

AWS A5.8/A5.8M	(2011; Amendment 2012) Specification for Filler Metals for Brazing and Braze Welding

ASME INTERNATIONAL (ASME)

ASME B16.22	(2013) Standard for Wrought Copper and Copper Alloy Solder Joint Pressure Fittings
ASME B31.5	(2016) Refrigeration Piping and Heat Transfer Components

ASTM INTERNATIONAL (ASTM)

ASTM A123/A123M	(2017) Standard Specification for Zinc (Hot-Dip Galvanized) Coatings on Iron and Steel Products
ASTM A167	(2011) Standard Specification for Stainless and Heat-Resisting Chromium-Nickel Steel Plate, Sheet, and Strip
ASTM A653/A653M	(2015; E 2016) Standard Specification for Steel Sheet, Zinc-Coated (Galvanized) or Zinc-Iron Alloy-Coated (Galvannealed) by the Hot-Dip Process
ASTM B117	(2016) Standard Practice for Operating Salt Spray (Fog) Apparatus
ASTM B280	(2016) Standard Specification for Seamless Copper Tube for Air Conditioning and Refrigeration Field Service
ASTM B88	(2016) Standard Specification for Seamless Copper Water Tube
ASTM C534/C534M	(2014) Standard Specification for Preformed Flexible Elastomeric Cellular Thermal Insulation in Sheet and Tubular Form
ASTM D1654	(2008; R 2016) Standard Test Method for Evaluation of Painted or Coated Specimens Subjected to Corrosive Environments

ETL TESTING LABORATORIES (ETL)

ETL DLP	(updated continuously) ETL Listed Mark Directory

MANUFACTURERS STANDARDIZATION SOCIETY OF THE VALVE AND FITTINGS INDUSTRY (MSS)

MSS SP-58	(1993; Reaffirmed 2010) Pipe Hangers and Supports - Materials, Design and Manufacture, Selection, Application, and Installation
MSS SP-69	(2003; Notice 2012) Pipe Hangers and Supports - Selection and Application (ANSI Approved American National Standard)

NATIONAL ELECTRICAL MANUFACTURERS ASSOCIATION (NEMA)

NEMA ICS 1	(2000; R 2015) Standard for Industrial Control and Systems: General Requirements
NEMA ICS 2	(2000; R 2005; Errata 2008) Industrial Control and Systems Controllers, Contactors, and Overload Relays Rated 600 V
NEMA ICS 6	(1993; R 2011) Industrial Control and Systems: Enclosures
NEMA MG 1	(2016) Motors and Generators

NATIONAL FIRE PROTECTION ASSOCIATION (NFPA)

NFPA 70	(2017) National Electrical Code
NFPA 90A	(2015) Standard for the Installation of Air Conditioning and Ventilating Systems

U.S. DEPARTMENT OF ENERGY (DOE)

Energy Star	(1992; R 2006) Energy Star Energy Efficiency Labeling System (FEMP)

U.S. GENERAL SERVICES ADMINISTRATION (GSA)

CID A-A-50502	(Basic) Air Conditioners, (Unitary Heat Pump), Air to Air (3,000 to 300,000 BTU)

UNDERWRITERS LABORATORIES (UL)

UL 109	(1997; Reprint Aug 2013) Tube Fittings for Flammable and Combustible Fluids, Refrigeration Service, and Marine Use
UL 1995	(2015) Heating and Cooling Equipment
UL 873	(2007; Reprint Feb 2015) Standard for Temperature-Indicating and -Regulating Equipment
UL 900	(2015) Standard for Air Filter Units

1.2 RELATED REQUIREMENTS

Section 23 03 00.00 20 BASIC MECHANICAL MATERIALS AND METHODS, applies to this section with the additions and modifications specified herein.

1.3 SUBMITTALS

Government approval is required for submittals with a "G" designation; submittals not having a "G" designation are for Contractor Quality Control approval. Submittals with an "S" are for inclusion in the Sustainability Notebook, in conformance to Section 01 33 29 SUSTAINABILITY REPORTING. Submit the following in accordance with Section 01 33 00 SUBMITTAL PROCEDURES:

SD-02 Shop Drawings

Field-Assembled Refrigerant Piping

Control System Wiring Diagrams; G

SD-03 Product Data

Ductless Split Air Conditioners; G

Heat Pumps, G; air to air

Dedicated Outside Air Unit (DOAS); G

Dehumidifier; G

Include documentation for Energy Star qualifications or meeting FEMP requirements. Indicate Energy Efficiency Rating.

Air Filters; G

Refrigerant: Provide MSDS sheets for all refrigerants

Refrigerant Piping and Accessories; G

For packaged terminal units, include indoor noise rating.

SD-06 Test Reports

Salt-Spray Tests; G

Start-Up and Initial Operational Tests

SD-08 Manufacturer's Instructions

Ductless Split Air Conditioners; G

Heat Pumps; G, air to air

Dedicated Outside Air Unit (DOAS); G

Refrigerant Piping and Accessories; G

SD-10 Operation and Maintenance Data

Ductless Split Air Conditioners; G, Data Package 3

Heat Pumps; G, air to air, Data Package 3

Dedicated Outside Air Unit (DOAS); G, Data Package 3

Dehumidifier; G

Air Filters; G, Data package 2

Submit in accordance with Section 01 78 23 OPERATION AND MAINTENANCE DATA and 01 78 24.00 20 FACILITY ELECTRONIC OPERATION AND MAINTENANCE SUPPORT INFORMATION (eOMSI).

SD-11 Closeout Submittals

Posted Operating Instructions

Energy Efficient Equipment for Unitary Air Conditioning Equipment; S

Ozone Depleting Substances; S

Indoor Air Quality During Construction; S

1.4 QUALITY ASSURANCE

1.4.1 Modification of References

Accomplish work in accordance with the referenced publications, except as modified by this section. Consider the advisory or recommended provisions to be mandatory, as though the word "shall" had been substituted for the words "should" or "could" or "may," wherever they appear. Interpret reference to "the Authority having jurisdiction," "the Administrative Authority," "the Owner," or "the Design Engineer" to mean the Contracting Officer.

1.4.2 Detail Drawing

For refrigerant piping, submit piping, including pipe sizes. Submit control system wiring diagrams.

1.4.3 Safety

Design, manufacture, and installation of unitary air conditioning equipment shall conform to ANSI/ASHRAE 15 & 34.

1.4.4 Posted Operating Instructions

Submit posted operating instructions for each packaged air conditioning unit.

1.4.5 Sizing

Size equipment based on Design Manual CS from the Air Conditioning Contractors of America; do not oversize.

1.4.6 Storage and Handling

Follow Installation, Operation and Maintenance manual instructions for rigging, moving, and unloading the unit at its final location. Store equipment in a clean, dry place protected from construction traffic in accordance with the Installation, Operation and Maintenance manual.

1.5 REFRIGERANTS

Refrigerants shall have an Ozone Depletion Potential (ODP) of 0.0. The ODP shall be in accordance with the "Montreal Protocol On Substances That Deplete The Ozone Layer," September 1987, sponsored by the United Nations Environment Programme. CFCs shall not be permitted. Refrigerant shall be an approved alternative refrigerant per EPA's Significant New Alternative Policy (SNAP) listing.

1.6 ENVIRONMENTAL REQUIREMENTS

For proper Indoor Environmental Quality, maintain positive pressure within the building. Ventilation shall meet or exceed ASHRAE 62.1 and all published addenda. Meet or exceed filter media efficiency as tested in accordance with ASHRAE 52.2. Thermal comfort shall meet or exceed ASHRAE 55.

PART 2 PRODUCTS

2.1 PRODUCT SUSTAINABILITY CRITERIA

For products in this section, where applicable and to extent allowed by performance criteria, provide and document the following:

2.1.1 Energy Efficient Equipment for Unitary Air Conditioning Equipment

Provide unitary air conditioning equipment meeting the efficiency requirements as stated within this section and provide documentation in conformance with Section 01 33 29 SUSTAINABILITY REPORTING paragraph ENERGY EFFICIENT EQUIPMENT.

2.1.2 Ozone Depleting Substances

Unitary air conditioning equipment must not use CFC-based refrigerants, and must have an Ozone Depletion Potential (ODP) no greater than 0.0, with exception to R-123, in conformance with this section. Provide documentation in conformance with Section 01 33 29 SUSTAINABILITY REPORTING paragraph OZONE DEPLETING SUBSTANCES.

2.2 SUPPLEMENTAL COMPONENTS/SERVICES

2.2.1 Refrigerant Piping

The requirements for refrigerant piping are specified in Section 23 23 00 REFRIGERANT PIPING.

2.2.2 Condensate Drain Lines

Provide and install condensate drainage for each item of equipment that generates condensate in accordance with Section 22 00 00 PLUMBING, GENERAL PURPOSE except as modified herein.

2.2.3 Insulation

The requirements for shop and field applied insulation are specified in Section 23 07 00 THERMAL INSULATION FOR MECHANICAL SYSTEMS.

2.2.4 Controls

The requirements for controls are specified in 23 09 00.00 22 INSTRUMENTATION AND CONTROL FOR HVAC.

2.3 DUCTLESS SPLIT AIR CONDITIONERS

2.3.1 Split-System Type

Provide separate assemblies designed to be used together. Base ratings on the use of matched assemblies. Provide performance diagrams for units with capacities not certified by AHRI to verify that components of the air conditioning system furnished will satisfy the capacity requirement specified or indicated. Energy Efficiency Ratio (EER) Of the Ductless Split Air Conditioner unit is to be equal to or greater than prescribed by ASHRAE 90.1 - IP when tested in accordance with ANSI/AHRI 210/240 or ANSI/AHRI 340/360 as applicable. List units with capacities smaller than 135,000 Btu/hr in the AHRI DCUP; in lieu of listing in the AHRI Directory, a letter of certification from AHRI that units have been certified and will be listed in the next Directory will be acceptable. Provide capacity, electrical characteristics and operating conditions as indicated. Condensers shall provide not less than 10 degrees F liquid subcooling at standard ratings. Air conditioners must include the Energy Star label affixed to the equipment.

2.3.2 Single Zone Units

Provide single zone type units arranged to draw or blow through coil sections.

2.3.3 Compressors

Capacity reduction may be accomplished by cylinder unloading, use of multi- or variable speed compressors, use of multiple, but not more than four compressors, or a combination of the two methods. Units with cylinder unloading shall start with capacity reduction devices in the unloaded position. Provide compressors with devices to prevent short cycling when shut down by safety controls. Device shall delay operation of compressor motor for at least 3 minutes but not more than 6 minutes.

2.3.4 Coils

On coils with all-aluminum construction, provide tubes of aluminum alloy 1100, 1200, or 3102; provide fins of aluminum alloy 7072; and provide tube sheets of aluminum alloy 7072 or 5052. Provide a separate air cooled condenser circuit for each compressor or parallel compressor installation. Provide a coating on condenser coils and fins as specified in the paragraph Corrosion Protection. Coils to be coated shall be part of manufacturer's standard product for capacities and ratings indicated and specified. Provide plate type fins.

2.3.5 Corrosion Protection

Provide the entire unit with corrosion protection which shall be capable of withstanding at least 1000 hours, with no visible corrosive effects, when tested in a salt spray and fog atmosphere in accordance with ASTM B117 test procedure.

Provide the condenser coils with the manufacvturer's enhanced coil protection. Corrosion durability shall be confirmed through testing to no

less than 1000 hours salt spray per ASTM B117. Coating is not required on coils utilizing copper tubes and copper fins.

2.3.6 Condenser Controls

Provide start-up and head pressure controls to allow for system operation at ambient temperatures down to 10 degrees F.

2.3.7 Fans

Provide evaporator fans for units less than 5 ton capacity, direct drive with at least two speed taps may be used or provide variable speed motor drive.

2.3.8 Filters

Provide filters to filter the air and locate inside air conditioners. Provide cleanable (reusable) type, MERV 6 rating. Filters shall conform to UL 900, Class 2.

2.3.9 Thermostats

Provide adjustable type that conforms to applicable requirements of UL 873. Provide combination heating-cooling type with contacts hermetically sealed against moisture, corrosion, lint, dust, and foreign material. Design to operate on not more than 1.5 degrees F differential and of suitable range calibrated in degrees F. Provide adjustable heat anticipation and fixed cooling anticipation. Provide two independent temperature sensing elements electrically connected to control the compressor and heating equipment, respectively. Accomplish manual switching for system changeover from heating to cooling or cooling to heating and fan operation through the use of a thermostat subbase. Provide system selector switches to provide "COOL" and "OFF" and "HEAT" and fan selector switches to provide "AUTOMATIC" and "ON." Provide relays, contactors, and transformers located in a panel or panels for replacement and service.

2.3.9.1 Cooling

a. When thermostat is in "COOL" position with fan selector switch in "AUTO" position, compressor, evaporator fan, and condenser fan shall cycle together.

b. When thermostat is in "COOL" position with fan selector switch in "ON" position, compressor, and condenser fan shall cycle together and evaporator fan shall run continuously.

2.3.9.2 Supply Air Fan

a. When fan selector switch is in "AUTO" position with thermostat in "OFF" position, fan shall not run.

b. When fan selector switch is in "ON" position, fan shall run continuously.

2.4 HEAT PUMPS, air to air

Provide a heat pump system consisting or an indoor unit and an outside condensing unit, of the same manufacturer, designed to be used together and meeting the requirements as stated in the following paragraphs.

Provide performance diagrams for units with capacities not certified by AHRI to verify that components of the Heat Pump system furnished will satisfy the capacity requirement specified or indicated.

Energy Efficiency Ratio (EER) Of the Heat Pump unit is to be equal to or greater than prescribed by ASHRAE 90.1 - IP.

2.4.1 Submittals

Provide product data that indicates dimensions, operating and shipping weights, capacities, ratings, factory supplied accessories, electrical characteristics, and connection requirements. Provide unit shop drawings that indicate assembly, unit dimensions, construction details, clearances, and connection details. Provide wiring diagram details for both power and control systems and differentiate between factory installed and field installed wiring. Provide Installation, Operation and Maintenance manual with startup requirements.

Provide Shop Drawings that indicate assembly, unit dimensions, clearances, and connection details. Computer generated fan curves for each fan are to be submitted with specific design operation point noted. Provide wiring diagram with detail for power and control systems and differentiate between factory installed and field installed wiring.

2.4.2 Indoor Unit

Provide single-zone draw-through type unit as indicated. Unit to include supply fan, DX evaporator coil, electric heaters, and unit controls, airtight insulated casing, filter sections, vibration-isolators, and appurtenances required for specified operation. Provide vibration isolators as indicated. Physical dimensions of each air handling unit are to be suitable to fit space allotted to the unit with the capacity indicated.

Provide air handling unit that is rated in accordance with ANSI/AHRI 340/360 and AHRI certified for cooling.

2.4.2.1 Casings

Provide the following:

a. Casing sections 2 inch double wall type, constructed of a minimum 18 gauge galvanized steel. Inner casing of double-wall units that are a minimum 20 gauge solid galvanized steel. Design and construct casing with an integral insulated structural galvanized steel frame such that exterior panels are non-load bearing.

b. Individually removable exterior panels with standard tools. Removal is not to affect the structural integrity of the unit. Furnish casings with access sections, inspection doors, and access doors, all capable of opening a minimum of 90 degrees, as indicated.

c. Insulated, fully gasketed, double-wall type inspection and access doors, of a minimum 18 gauge outer and 20 gauge inner panels made of either galvanized steel. Doors to be rigid and provided with heavy duty hinges and latches. Inspection doors are to be a minimum 12 inches wide by 12 inches high. Access doors are to be a minimum 24 inches wide, the full height of the unit casing or a minimum of 6 foot, whichever is less.

d. Double-wall insulated type drain pan (thickness equal to exterior casing) constructed of 16 gauge corrosion resisting sheet steel conforming to ASTM A167, Type 304, conforming to ASHRAE 62.1. Construct drain pans water tight, treated to prevent corrosion, and designed for positive condensate drainage. When 2 or more cooling coils are used, with one stacked above the other, condensate from the upper coils is not to flow across the face of lower coils. Provide intermediate drain pans or condensate collection channels and downspouts, as required to carry condensate to the unit drain pan out of the air stream and without moisture carryover. Construct drain pan to allow for easy visual inspection, including underneath the coil without removal of the coil and to allow complete and easy physical cleaning of the pan underneath the coil without removal of the coil. Coils to be individually removable from the casing.

e. Casing insulation that conforms to NFPA 90A. Double-wall casing sections handling conditioned air to be insulated with not less than 2 inches of 1-1/2 pound density coated fibrous glass material or other insulating material having a thermal conductivity not greater than 0.23 Btu/hr-sf-F. Foil-faced insulation is not an acceptable substitute for use with double wall casing. Double wall insulation to be completely sealed by inner and outer panels.

f. A latched and hinged inspection door, in the fan and coil sections. Plus additional inspection doors, access doors and access sections where indicated.

2.4.2.2 Direct-Expansion Coils

Provide suitable direct-expansion coils for use with R-410A refrigerant involved. Provide refrigerant piping that conforms to ASTM B280 and clean, dehydrate and seal. Provide fin-and-tube type coils constructed of seamless copper tubes and aluminum or copper fins mechanically bonded or soldered to the tubes. Provide seamless copper tubing suction headers. Provide supply headers that consist of a distributor which distributes the refrigerant through seamless copper tubing equally to all circuits in the coil. Provide circuited tubes to ensure minimum pressure drop and maximum heat transfer. Provide circuiting that permits refrigerant flow from inlet to suction outlet without causing oil slugging or restricting refrigerant flow in coil. Provide field installed coils which are completely dehydrated and sealed at the factory upon completion of pressure tests.

2.4.2.3 Electric Heating Coil

Provide an electric duct heater coil in accordance with UL 1995 and NFPA 70. Provide duct- or unit-mounted coil. Provide nickel chromium resistor, single stage, strip type coil. Provide coil with a built-in or surface-mounted high-limit thermostat interlocked electrically so that the coil cannot be energized unless the fan is energized. Provide galvanized steel or aluminum coil casing and support brackets. Mount coil to eliminate noise from expansion and contraction and for complete accessibility for service.

2.4.2.4 Air Filters

List air filters according to requirements of UL 900.

2.4.2.4.1 Extended Surface Pleated Panel Filters

Provide 2 inch depth, sectional, disposable type filters of the size indicated with a MERV of 8 for the pre-filters and 4 inch depth, sectional, disposable type filters of the size indicated with a MERV 13 for the final filter when tested according to ASHRAE 52.2. Provide initial resistance at 500 fpm that does not exceed 0.36 inches water gauge. Provide UL Class 2 filters, and nonwoven cotton and synthetic fiber mat media. Attach a wire support grid bonded to the media to a moisture resistant fiberboard frame. Bond all four edges of the filter media to the inside of the frame to prevent air bypass and increase rigidity.

2.4.2.4.2 Holding Frames

Fabricate frames from not lighter than 16 gauge sheet steel with rust-inhibitor coating. Equip each holding frame with suitable filter holding devices. Provide gasketed holding frame seats. Make all joints airtight.

2.4.2.4.3 Filter Gauges

Provide dial type filter gauges, diaphragm actuated draft for all filter stations, including those filters which are furnished as integral parts of factory fabricated air handling units. Gauges to be at least 3-7/8 inches in diameter, with white dials with black figures, and graduated in 0.01 inch of water, with a minimum range of 1 inch of water beyond the specified final resistance for the filter bank on which each gauge is applied. Provide each gauge with a screw operated zero adjustment and two static pressure tips with integral compression fittings, two molded plastic vent valves, two 5 foot minimum lengths of 1/4 inch diameter aluminum tubing, and all hardware and accessories for gauge mounting.

2.4.2.5 Supply Fans

Provide Fans that are single-inlet, direct drive, centrifugal type with each fan in a separate scroll. Dynamically balance fans and shafts prior to installation into air handling unit, then after it has been installed in the air handling unit, statically and dynamically balance the entire fan assembly. Mount fans on steel shafts, accurately ground and finished.

2.4.2.6 Access Sections and Filter/Mixing Boxes

Provide access sections where indicated and furnish with access doors as shown. Construct access sections and filter sections in a manner identical to the remainder of the unit casing and equip with access doors.

2.4.3 Condensing Unit

2.4.3.1 General

The air-cooled heat pump condensing unit to include compressors, air-cooled condenser coils, condenser fans, suction and liquid connection valves, accumulator, receiver, reversing valve, filter drier with check valve, and thermal expansion valve. Provide unit with a factory holding charge of R-410A refrigerant and oil.

Energy Efficiency Ratio (EER) to be equal to or greater than prescribed by ASHRAE 90.1 - IP when rated with the appropriate indoor unit. Provide unit certified in accordance with UL 1995. Unit and refrigeration system

to comply with ANSI/ASHRAE 15 & 34, Safety Standard for Mechanical Refrigeration and be safety certified by ETL and be ETL DLP listed.

2.4.3.2 Submittals

Provide product data that indicates dimensions, operating and shipping weights, capacities, ratings, factory supplied accessories, electrical characteristics, and connection requirements. Provide unit shop drawings that indicate assembly, unit dimensions, construction details, clearances, and connection details. Provide wiring diagram details for both power and control systems and differentiate between factory installed and field installed wiring. Provide Installation, Operation and Maintenance manual with startup requirements.

2.4.3.3 Corrosion Protection

Provide the entire unit with corrosion protection which shall be capable of withstanding at least 3000 hours, with no visible corrosive effects, when tested in a salt spray and fog atmosphere in accordance with ASTM B117 test procedure.

Provide the condenser coils with a flexible, epoxy polymer e-coat uniformly applied to all coil surface areas without material bridging between fins. Corrosion durability shall be confirmed through testing to no less than 3000 hours salt spray per ASTM B117. Coated coil shall receive a spray-applied, UV-resistant polyurethane topcoat to prevent UV degradation of the e-coat. Coating is not required on coils utilizing copper tubes and copper fins.

2.4.3.4 Refrigeration System

The system is to be configured as heat pump. Equip the refrigeration circuit with a thermal expansion with an external check valve on the indoor coil. Provide reversing valve, outdoor coil thermal expansion valve, bi-flow filter drier, and liquid line receiver factory installed in the condensing unit.

Equip each refrigeration circuit with automatic reset low pressure and manual reset high pressure refrigerant safety controls, Schrader type service fittings on both the high pressure and low pressure sides, and service valves for liquid and suction connections. Provide factory installed liquid line filter driers.

2.4.3.4.1 Compressors

Provide Variable capacity scroll compressors. If dual compressors are provided, the refrigeration system is to be equipped with two independent refrigeration circuits. Variable capacity scroll compressor to be capable of modulation from 10-100 percent of its capacity. Provide each compressor with a crankcase heater. Isolate compressors from the base pan with the compressor manufacturer's recommended rubber or spring vibration isolators, to reduce any transmission of noise from the compressors.

Provide Compressors with a 5 year warranty, parts and labor, from date of Government acceptance.

2.4.3.5 Condenser Coil

Provide coils designed for use with R-410A refrigerant and constructed of

copper tubes with aluminum fins mechanically bonded to the tubes and aluminum end casings or constructed of copper tubes with copper fins mechanically bonded to the tubes and stainless steel end casings. Design coils for a minimum of 10 Degrees F of refrigerant sub-cooling.

2.4.3.6 Condenser Fan

Horizontal or vertical discharge, axial flow, direct drive fans. Provide weather protected, single phase, direct drive, and open drip proof fan motor with inherent overload protection. Provide electronically commutated motor driven variable speed condenser fans for head pressure control and allow operation down to 35 degrees F.

2.4.4 Controls

Provide BACnet control interface for the DOAS system. The requirements for controls are specified in 23 09 00.00 22 INSTRUMENTATION AND CONTROL FOR HVAC.

2.4.5 Electrical

Provide a factory installed 24V control circuit transformer.

Provide units with phase and brown out protection which shuts down all motors in the units if the electrical phases are more than 10 percent out of balance on voltage, the voltage is more than 10 percent under design voltage, or on phase reversal.

2.5 DEDICATED OUTSIDE AIR UNIT (DOAS)

Provide a dedicated outside air unit consisting or an indoor unit and an outside condensing unit, of the same manufacturer, designed to be used together and meeting the requirements as stated in the following paragraphs. Provide performance diagrams for units with capacities not certified by AHRI to verify that components of the DOAS system furnished will satisfy the capacity requirement specified or indicated.

Energy Efficiency Ratio (EER) OF THE DOAS unit is to be equal to or greater than prescribed by ASHRAE 90.1 - IP.

2.5.1 Submittals

Provide product data that indicates dimensions, operating and shipping weights, capacities, ratings, factory supplied accessories, electrical characteristics, and connection requirements. Provide unit shop drawings that indicate assembly, unit dimensions, construction details, clearances, and connection details. Provide wiring diagram details for both power and control systems and differentiate between factory installed and field installed wiring. Provide Installation, Operation and Maintenance manual with startup requirements.

Provide Shop Drawings that indicate assembly, unit dimensions, clearances, and connection details. Computer generated fan curves for each fan are to be submitted with specific design operation point noted. Provide wiring diagram with detail for power and control systems and differentiate between factory installed and field installed wiring.

2.5.2 DOAS Indoor Unit

Provide single-zone draw-through type unit as indicated. Unit to include supply fan, DX evaporator coil, hot gas bypass reheat coil, electric heater, exhaust fan, energy recovery wheel, and unit controls, airtight insulated casing, filter sections, vibration-isolators, and appurtenances required for specified operation. Provide vibration isolators as indicated. Physical dimensions of each air handling unit are to be suitable to fit space allotted to the unit with the capacity indicated.

Provide air handling unit that is rated in accordance with AHRI 430 and AHRI certified for cooling.

2.5.2.1 Corrosion Protection

Provide the interior of the unit with corrosion protection which shall be capable of withstanding at least 3000 hours, with no visible corrosive effects, when tested in a salt spray and fog atmosphere in accordance with ASTM B117 test procedure. Air tunnel, fans and dampers shall all include the corrosion protection.

Provide all coils in contact with outside air a flexible, epoxy polymer e-coat uniformly applied to all coil surface areas without material bridging between fins. Corrosion durability shall be confirmed through testing to no less than 3000 hours salt spray per ASTM B117. Coated coil shall receive a spray-applied, UV-resistant polyurethane topcoat to prevent UV degradation of the e-coat. Coating is not required on coils utilizing copper tubes and copper fins.

2.5.2.2 Casings

Provide the following:

a. Casing sections 2 inch double wall type, constructed of a minimum 18 gauge galvanized steel. Inner casing of double-wall units that are a minimum 20 gauge solid galvanized steel. Design and construct casing with an integral insulated structural galvanized steel frame such that exterior panels are non-load bearing.

b. Individually removable exterior panels with standard tools. Removal is not to affect the structural integrity of the unit. Furnish casings with access sections, inspection doors, and access doors, all capable of opening a minimum of 90 degrees, as indicated.

c. Insulated, fully gasketed, double-wall type inspection and access doors, of a minimum 18 gauge outer and 20 gauge inner panels made of either galvanized steel. Doors to be rigid and provided with heavy duty hinges and latches. Inspection doors are to be a minimum 12 inches wide by 12 inches high. Access doors are to be a minimum 24 inches wide, the full height of the unit casing or a minimum of 6 foot, whichever is less.

d. Double-wall insulated type drain pan (thickness equal to exterior casing) constructed of 16 gauge corrosion resisting sheet steel conforming to ASTM A167, Type 304, conforming to ASHRAE 62.1. Construct drain pans water tight, treated to prevent corrosion, and designed for positive condensate drainage. Provide intermediate drain pans or condensate collection channels and downspouts, as required to carry condensate to the unit drain pan out of the air stream and without moisture carryover. Construct drain pan to allow for easy visual inspection, including underneath the coil without removal of

the coil and to allow complete and easy physical cleaning of the pan underneath the coil without removal of the coil. Coils to be individually removable from the casing.

e. Casing insulation that conforms to NFPA 90A. Double-wall casing sections handling conditioned air to be insulated with not less than 2 inches of 1-1/2 pound density coated fibrous glass material or other insulating material having a thermal conductivity not greater than 0.23 Btu/hr-sf-F. Foil-faced insulation is not an acceptable substitute for use with double wall casing. Double wall insulation to be completely sealed by inner and outer panels.

f. A latched and hinged inspection door, in the fan and coil sections. Plus additional inspection doors, access doors and access sections where indicated.

2.5.2.3 Direct-Expansion Coils

Provide suitable direct-expansion coils for use with R-410A refrigerant involved. Provide refrigerant piping that conforms to ASTM B280 and clean, dehydrate and seal. Provide fin-and-tube type coils constructed of seamless copper tubes and aluminum or copper fins mechanically bonded or soldered to the tubes. Provide seamless copper tubing suction headers. Provide supply headers that consist of a distributor which distributes the refrigerant through seamless copper tubing equally to all circuits in the coil. Provide circuited tubes to ensure minimum pressure drop and maximum heat transfer. Provide circuiting that permits refrigerant flow from inlet to suction outlet without causing oil slugging or restricting refrigerant flow in coil. Provide field installed coils which are completely dehydrated and sealed at the factory upon completion of pressure tests.

2.5.2.4 Electric Heating Coil

Provide an electric duct heater coil in accordance with UL 1995 and NFPA 70. Provide duct- or unit-mounted coil. Provide nickel chromium resistor, single stage, strip type coil. Provide coil with a built-in or surface-mounted high-limit thermostat interlocked electrically so that the coil cannot be energized unless the fan is energized. Provide galvanized steel or aluminum coil casing and support brackets. Mount coil to eliminate noise from expansion and contraction and for complete accessibility for service.

2.5.2.5 Energy Recovery

Provide the following:

a. The energy recovery component utilizes a rotary wheel in an insulated cassette frame complete with seals, drive motor and drive belt.

b. Outside air and exhaust air openings to contain an adjustable, motor operated outside air damper assembly constructed of extruded aluminum, hollow core, airfoil blades with rubber edge seals and end seals. Damper blades to be designed to have no more than 3 cfm of leakage per sq ft. at 1 in. w.g. air pressure differential across the damper. Low leakage dampers to be Class 2 AMCA certified, in accordance with AMCA 511. Controll dampers with a 2 position actuator.

c. Provide a factory mounted and tested energy recovery wheel. Mount the

energy recovery wheel in a rigid frame containing the wheel drive motor, drive belt, wheel seals and bearings. Wheel frame shall slide out for service and removal from the cabinet.

1. Wheels to be wound continuously with one flat and one structured layer in an ideal parallel plate geometry providing laminar flow. Effectively capture the layers in stainless steel wheel frames or aluminum and stainless steel segment frames that provide a rigid and self-supporting matrix.

2. Provide wheels with removable energy transfer matrix. Wheel frame construction to be a welded hub, spoke and rim assembly of stainless, plated and/or coated steel and be self-supporting without matrix segments in place. Segments are to be removable without the use of tools to facilitate maintenance and cleaning. Select wheel bearings to provide an L-10 life in excess of 400,000 hours. Rim to be continuous rolled stainless steel and the wheel and be connected to the shaft by means of taper locks.

d. Provide all diameter and perimeter seals as part of the cassette assembly and be factory set. Provide drive belts of stretch urethane for wheel rim drive without the need for external tensioners or adjustment.

e. The energy recovery cassette shall be an Underwriters Laboratories Recognized Component for electrical and fire safety. The wheel drive motor shall be an Underwriters Laboratory Recognized Component and shall be mounted in the cassette frame and supplied with a service connector or junction box. Thermal performance shall be certified by the manufacturer in accordance with ASHRAE 84, Method of Testing Air-to-Air Heat Exchangers and AHRI 1060 I-P, Rating Air-to-Air Energy Recovery Ventilation Equipment. Cassettes to be listed in the AHRI Certified Products.

f. Provide 2 inch depth, sectional, disposable type filters of the size indicated with a MERV of 8 when tested according to ASHRAE 52.2 upstream of the wheels

g. Provide hinged service access door allow access to the wheel.

h. Total energy recovery wheels is to be coated with silica gel desiccant permanently bonded by a process without the use of binders or adhesives, which may degrade desiccant performance. Provide a lightweight polymer substrate that will not degrade nor require additional coatings for application in marine or coastal environments. Coated segments to be washable with detergent or alkaline coil cleaner and water. Desiccant is not to dissolve nor deliquesce in the presence of water or high humidity.

i. Provide a 5 year non-prorated warranty for the Energy recovery wheel cassette, from the date of Government acceptance. The 5 year warranty applies to all parts and components of the cassette, with the exception of the motor, which carrys an 18 month warranty. The warranty covers material and workmanship that prove defective, within the specified warranty period. Warranty excludes parts associated with routine maintenance, such as belts.

2.5.2.6 Air Filters

List air filters according to requirements of UL 900.

2.5.2.6.1 Extended Surface Pleated Panel Filters

Provide 2 inch depth, sectional, disposable type filters of the size indicated with a MERV of 8 for the pre-filters and 4 inch depth, sectional, disposable type filters of the size indicated with a MERV 13 for the final filter when tested according to ASHRAE 52.2. Provide initial resistance at 500 fpm that does not exceed 0.36 inches water gauge. Provide UL Class 2 filters, and nonwoven cotton and synthetic fiber mat media. Attach a wire support grid bonded to the media to a moisture resistant fiberboard frame. Bond all four edges of the filter media to the inside of the frame to prevent air bypass and increase rigidity.

2.5.2.6.2 Holding Frames

Fabricate frames from not lighter than 16 gauge sheet steel with rust-inhibitor coating. Equip each holding frame with suitable filter holding devices. Provide gasketed holding frame seats. Make all joints airtight.

2.5.2.6.3 Filter Gauges

Provide dial type filter gauges, diaphragm actuated draft for all filter stations, including those filters which are furnished as integral parts of factory fabricated air handling units. Gauges to be at least 3-7/8 inches in diameter, with white dials with black figures, and graduated in 0.01 inch of water, with a minimum range of 1 inch of water beyond the specified final resistance for the filter bank on which each gauge is applied. Provide each gauge with a screw operated zero adjustment and two static pressure tips with integral compression fittings, two molded plastic vent valves, two 5 foot minimum lengths of 1/4 inch diameter aluminum tubing, and all hardware and accessories for gauge mounting.

2.5.2.7 Supply and Exhaust Fans

Provide Fans that are single-inlet, direct drive, centrifugal type with each fan in a separate scroll. Dynamically balance fans and shafts prior to installation into air handling unit, then after it has been installed in the air handling unit, statically and dynamically balance the entire fan assembly. Mount fans on steel shafts, accurately ground and finished.

2.5.2.8 Access Sections and Filter/Mixing Boxes

Provide access sections where indicated and furnish with access doors as shown. Construct access sections and filter sections in a manner identical to the remainder of the unit casing and equip with access doors.

2.5.3 Condensing Unit

2.5.3.1 General

The air-cooled heat pump condensing unit to include compressors, air-cooled condenser coils, condenser fans, suction and liquid connection valves, accumulator, receiver, reversing valve, filter drier with check valve, and thermal expansion valve. Provide unit with a factory holding charge of R-410A refrigerant and oil.

Energy Efficiency Ratio (EER) to be equal to or greater than prescribed by

ASHRAE 90.1 - IP when rated with the appropriate indoor unit. Provide unit certified in accordance with UL 1995. Unit and refrigeration system to comply with ANSI/ASHRAE 15 & 34 and be safety certified by ETL and be ETL DLP listed.

2.5.3.2 Corrosion Protection

Provide the entire unit with corrosion protection which shall be capable of withstanding at least 3000 hours, with no visible corrosive effects, when tested in a salt spray and fog atmosphere in accordance with ASTM B117 test procedure.

Provide the evaporator coils with a flexible, epoxy polymer e-coat uniformly applied to all coil surface areas without material bridging between fins. Corrosion durability shall be confirmed through testing to no less than 3000 hours salt spray per ASTM B117. Coated coil shall receive a spray-applied, UV-resistant polyurethane topcoat to prevent UV degradation of the e-coat. Coating is not required on coils utilizing copper tubes and copper fins.

2.5.3.3 Refrigeration System

DOAS system is to be configured as heat pump. Equip the refrigeration circuit with a thermal expansion with an external check valve on the indoor coil. Provide reversing valve, outdoor coil thermal expansion valve, bi-flow filter drier, and liquid line receiver factory installed in the condensing unit.

Provide modulating hot gas reheat on the refrigeration circuit. Refrigeration circuit includes hot gas reheat coil, modulating valves, check valve, liquid line receiver, electronic controller, supply air temperature sensor and a dehumidification control signal terminal that enables the dehumidification mode of operation, which includes supply air temperature control to prevent supply air temperature swings and overcooling of the space. Modulating reheat valves and receiver to be factory installed in the condensing unit. Reheat line connections to be labeled, extend beyond the unit casing and be located near the suction and liquid line connections for ease of field connection.

Equip each refrigeration circuit with automatic reset low pressure and manual reset high pressure refrigerant safety controls, Schrader type service fittings on both the high pressure and low pressure sides, and service valves for liquid and suction connections. Provide factory installed liquid line filter driers.

2.5.3.3.1 Compressors

Provide Variable capacity scroll compressors. If dual compressors are provided, the refrigeration system is to be equipped with two independent refrigeration circuits. Variable capacity scroll compressor to be capable of modulation from 10-100 percent of its capacity. Provide each compressor with a crankcase heater. Isolate compressors from the base pan with the compressor manufacturer's recommended rubber or spring vibration isolators, to reduce any transmission of noise from the compressors.

Provide Compressors with a 5 year warranty, parts and labor, from date of Government acceptance.

2.5.3.4 Condenser Coil

Provide coils designed for use with R-410A refrigerant and constructed of copper tubes with aluminum fins mechanically bonded to the tubes and aluminum end casings or constructed of copper tubes with copper fins mechanically bonded to the tubes and stainless steel end casings. Design coils for a minimum of 10°F of refrigerant sub-cooling.

2.5.3.5 Condenser Fan

Horizontal or vertical discharge, axial flow, direct drive fans. Provide weather protected, single phase, direct drive, and open drip proof fan motor with inherent overload protection. Provide electronically commutated motor driven variable speed condenser fans for head pressure control and allow operation down to 35°F.

2.5.3.6 Condenser Controls

Provide start-up and head pressure controls to allow for system operation at ambient temperatures down to 22 degrees F.

2.5.4 Controls

Provide BACnet control interface for the DOAS system. The requirements for controls are specified in 23 09 00.00 22 INSTRUMENTATION AND CONTROL FOR HVAC.

2.5.5 Electrical

Provide a factory installed 24V control circuit transformer.

Provide units with phase and brown out protection which shuts down all motors in the units if the electrical phases are more than 10 percent out of balance on voltage, the voltage is more than 10 percent under design voltage, or on phase reversal.

2.6 Dehumidifier

Provide an Energy Star certified self contained dehumidifier of the size, capacity, and air flow as indicated. The unit to have automatic defrost, humidistat, and shutoff controls, have an external drain connector and washable air filter.

2.7 MOTORS AND STARTERS

NEMA MG 1, NEMA ICS 1, and NEMA ICS 2. Variable speed. Motors less than 1 hp shall meet NEMA High Efficiency requirements. Motors 1 hp and larger shall meet NEMA Premium Efficiency requirements. Determine specific motor characteristics to ensure provision of correctly sized starters and overload heaters. Provide motors to operate at full capacity with a voltage variation of plus or minus 10 percent of the motor voltage rating. Motor size shall be sufficient for the duty to be performed and shall not exceed its full load nameplate current rating when driven equipment is operated at specified capacity under the most severe conditions likely to be encountered. When motor size provided differs from size indicated or specified, the Contractor shall make the necessary adjustments to the wiring, disconnect devices, and branch circuit protection to accommodate equipment actually provided. Provide soft start type motor starters. Provide general-purpose weather-resistant type starter enclosures in accordance with NEMA ICS 6.

2.8 REFRIGERANT PIPING AND ACCESSORIES

Provide accessories as specified in CID A-A-50502 and this section. Provide suction line accumulators as recommended by equipment manufacturer's installation instructions. Provide a filter-drier in the liquid line.

2.8.1 Factory Charged Tubing

Provide extra soft, deoxidized, bright annealed copper tubing conforming to ASTM B280, factory dehydrated and furnished with a balanced charge of refrigerant recommended by manufacturer of equipment being connected. Factory insulate suction line tubing with 3/8 inch minimum thickness of closed cell, foamed plastic conforming to ASTM C534/C534M with a permeance rating not to exceed 1.0. Provide quick-connectors with caps or plugs to protect couplings. Include couplings for suction and liquid line connections of the indoor and outdoor sections.

2.8.2 Field-Assembled Refrigerant Piping

Material and dimensional requirements for field-assembled refrigerant piping, valves, fittings, and accessories shall conform to ANSI/ASHRAE 15 & 34 and ASME B31.5, except as herein specified. Factory clean, dehydrate, and seal piping before delivery to the project location. Provide seamless copper tubing, hard drawn, Type K or L, conforming to ASTM B88, except that tubing with outside diameters of 1/4 inch and 3/8 inch shall have nominal wall thickness of not less than 0.030 inch and 0.032 inch, respectively. Soft annealed copper tubing conforming to ASTM B280 may be used where flare connections to equipment are required only in nominal sizes less than one inch outside diameter.

2.8.3 Fittings

ASME B16.22 for solder-joint fittings. UL 109 for flared tube fittings.

2.8.4 Brazing Filler Material

AWS A5.8/A5.8M.

2.8.5 Pipe Hangers and Supports

MSS SP-69 and MSS SP-58, Types 1, 7, or 10, except as indicated otherwise. Type 40 shields shall be used on all insulated piping.

2.8.6 Pipe Sleeves

Provide sleeves where piping passes through walls, floors, roofs, and partitions. Secure sleeves in proper position and location during construction. Provide sleeves of sufficient length to pass through entire thickness of walls, floors, roofs, and partitions. Provide not less than 0.25 inch space between exterior of piping or pipe insulation and interior of sleeve. Firmly pack space with insulation and caulk at both ends of the sleeve with plastic waterproof cement which will dry to a firm but pliable mass, or provide a segmented elastomeric seal.

2.8.6.1 Sleeves in Masonry and Concrete Walls, Floors, and Roofs

Provide Schedule 40 or Standard Weight zinc-coated steel pipe sleeves.

Extend sleeves in floor slabs 3 inches above finished floor.

2.8.6.2 Sleeves in Partitions and Non-Masonry Structures

Provide zinc-coated steel sheet sleeves having a nominal weight of not less than 0.90 pound per square foot, in partitions and other than masonry and concrete walls, floors, and roofs.

2.9 FINISHES

Provide steel surfaces of equipment including packaged terminal units, heat pumps, and air conditioners, that do not have a zinc coating conforming to ASTM A123/A123M and ASTM A653/A653M, or a duplex coating of zinc and paint, with a factory applied coating or paint system. Provide a coating or paint system on actual equipment identical to that on salt-spray test specimens with respect to materials, conditions of application, and dry-film thickness.

2.10 SOURCE QUALITY CONTROL

2.10.1 Salt-Spray Tests

Salt-spray test the factory-applied coating or paint system of equipment including packaged terminal units, heat pumps, and air conditioners in accordance with ASTM B117. Conduct test for 3,000 hours for equipment installed outdoors, or 125 hours for equipment installed indoors. Test specimens shall have a standard scribe mark as defined in ASTM D1654. Upon completion of exposure, evaluate and rate the coating or paint system in accordance with procedures A and B of ASTM D1654. Rating of failure at the scribe mark shall not be less than six, average creepage not greater than 1/8 inch. Rating of the unscribed area shall not be less than 10, no failure.

PART 3 EXECUTION

3.1 CONSTRUCTION-_RELATED SUSTAINABILITY CRITERIA

Perform and document the following:

3.1.1 Indoor Air Quality During Construction

Provide documentation showing that after construction ends, and prior to occupancy, new filters were installed in conformance with Section 01 33 29 SUSTAINABILITY REPORTING paragraph INDOOR AIR QUALITY DURING CONSTRUCTION.

3.2 EQUIPMENT INSTALLATION

Install equipment and components in a manner to ensure proper and sequential operation of equipment and equipment controls. Install equipment not covered in this section, or in manufacturer's instructions, as recommended by manufacturer's representative. Provide proper foundations for mounting of equipment, accessories, appurtenances, piping and controls including, but not limited to, supports, vibration isolators, stands, guides, anchors, clamps and brackets. Foundations for equipment shall conform to equipment manufacturer's recommendation, unless otherwise indicated. Set anchor bolts and sleeves using templates. Provide anchor bolts of adequate length, and provide with welded-on plates on the head end embedded in the concrete. Level equipment bases, using jacks or steel wedges, and neatly grout-in with a nonshrinking type of grouting mortar.

Locate equipment to allow working space for servicing including shaft removal, disassembling compressor cylinders and pistons, replacing or adjusting drives, motors, or shaft seals, access to water heads and valves of shell and tube equipment, tube cleaning or replacement, access to automatic controls, refrigerant charging, lubrication, oil draining and working clearance under overhead lines. Provide electric isolation between dissimilar metals for the purpose of minimizing galvanic corrosion.

3.3 PIPING

Brazing, bending, forming and assembly of refrigerant piping shall conform to ASME B31.5.

3.3.1 Pipe Hangers and Supports

Design and fabrication of pipe hangers, supports, and welding attachments shall conform to MSS SP-58. Installation of hanger types and supports for bare and covered pipes shall conform to MSS SP-69 for the system temperature range. Unless otherwise indicated, horizontal and vertical piping attachments shall conform to MSS SP-58.

3.3.2 Refrigerant Piping

Cut pipe to measurements established at the site and work into place without springing or forcing. Install piping with sufficient flexibility to provide for expansion and contraction due to temperature fluctuation. Where pipe passes through building structure pipe joints shall not be concealed, but shall be located where they may be readily inspected. Install piping to be insulated with sufficient clearance to permit application of insulation. Install piping as indicated and detailed, to avoid interference with other piping, conduit, or equipment. Except where specifically indicated otherwise, run piping plumb and straight and parallel to walls and ceilings. Trapping of lines will not be permitted except where indicated. Provide sleeves of suitable size for lines passing through building structure. Braze refrigerant piping with silver solder complying with AWS A5.8/A5.8M. Inside of tubing and fittings shall be free of flux. Clean parts to be jointed with emery cloth and keep hot until solder has penetrated full depth of fitting and extra flux has been expelled. Cool joints in air and remove flame marks and traces of flux. During brazing operation, prevent oxide film from forming on inside of tubing by slowly flowing dry nitrogen through tubing to expel air. Make provisions to automatically return oil on halocarbon systems. Installation of piping shall comply with ASME B31.5.

3.3.3 Returning Oil From Refrigerant System

Install refrigerant lines so that gas velocity in the evaporator suction line is sufficient to move oil along with gas to the compressor. Where equipment location requires vertical risers, line shall be sized to maintain sufficient velocity to lift oil at minimum system loading and corresponding reduction of gas volume. Install a double riser when excess velocity and pressure drop would result from full system loading. Larger riser shall have a trap, of minimum volume, obtained by use of 90- and 45-degree ells. Arrange small riser with inlet close to bottom of horizontal line, and connect to top of upper horizontal line. Do not install valves in risers.

3.3.4 Refrigerant Driers, Sight Glass Indicators, and Strainers

Provide refrigerant driers, sight glass liquid indicators, and strainers in refrigerant piping in accordance with CID A-A-50502 and this section when not furnished by the manufacturer as part of the equipment. Install driers in liquid line with service valves and valved bypass line the same size as liquid line in which dryer is installed. Size of driers shall be determined by piping and installation of the unit on location. Install dryers of 50 cubic inches and larger vertically with the cover for removing cartridge at the bottom. Install moisture indicators in the liquid line downstream of the drier. Indicator connections shall be the same size as the liquid line in which it is installed.

3.3.5 Strainer Locations and Installation

Locate strainers close to equipment they are to protect. Provide a strainer in common refrigerant liquid supply to two or more thermal valves in parallel when each thermal valve has a built-in strainer. Install strainers with screen down and in direction of flow as indicated on strainer's body.

3.3.6 Solenoid Valve Installation

Install solenoid valves in horizontal lines with stem vertical and with flow in direction indicated on valve. If not incorporated as integral part of the valve, provide a strainer upstream of the solenoid valve. Provide service valves upstream of the solenoid valve, upstream of the strainer, and downstream of the solenoid valve. Remove the internal parts of the solenoid valve when brazing the valve.

3.4 AUXILIARY DRAIN PANS, DRAIN CONNECTIONS, AND DRAIN LINES

Provide auxiliary drain pans under units located above finished ceilings or over mechanical or electrical equipment where condensate overflow will cause damage to ceilings, piping, and equipment below. Provide separate drain lines for the unit drain and auxiliary drain pans. Trap drain pans from the bottom to ensure complete pan drainage. Provide drain lines full size of drain opening. Traps and piping to drainage disposal points shall conform to Section 22 00 00 PLUMBING, GENERAL PURPOSE.

3.5 ACCESS PANELS

Provide access panels for concealed valves, controls, dampers, and other fittings requiring inspection and maintenance in accordance with section 05 50 13 MISCELLANEOUS METAL FABRICATIONS.

3.6 AIR FILTERS

Allow access space for servicing filters. Install filters with suitable sealing to prevent bypassing of air.

3.7 PIPE SLEEVES

Provide where piping passes entirely through walls, ceilings, roofs, and floors.

3.7.1 Sleeves in Masonry and Concrete

Provide steel pipe sleeves or schedule 40 steel pipe sleeves. Core drilling of masonry and concrete may be provided in lieu of pipe sleeves when cavities in the core-drilled hole are completely grouted smooth.

3.7.2 Sleeves Not in Masonry and Concrete

Provide 26 gage galvanized steel sheet or PVC plastic pipe sleeves.

3.8 IDENTIFICATION TAGS AND PLATES

Provide equipment, gages, thermometers, valves, and controllers with tags numbered and stamped for their use. Provide plates and tags of brass or suitable nonferrous material, securely mounted or attached. Provide minimum letter and numeral size of 1/8 inch high.

3.9 FIELD QUALITY CONTROL

3.9.1 Leak Testing

Upon completion of installation of air conditioning equipment, test factory- and field-installed refrigerant piping with an electronic-type leak detector. Use same type of refrigerant to be provided in the system for leak testing. When nitrogen is used to boost system pressure for testing, ensure that it is eliminated from the system before charging. Minimum refrigerant leak field test pressure shall be as specified in ANSI/ASHRAE 15 & 34, except that test pressure shall not exceed 150 psig on hermetic compressors unless otherwise specified as a low side test pressure on the equipment nameplate. If leaks are detected at time of installation or during warranty period, remove the entire refrigerant charge from the system, correct leaks, and retest system.

3.9.2 Evacuation, Dehydration, and Charging

After field charged refrigerant system is found to be without leaks or after leaks have been repaired on field-charged and factory-charged systems, evacuate the system using a reliable gage and a vacuum pump capable of pulling a vacuum of at least one mm Hg absolute. Evacuate system in accordance with the triple-evacuation and blotter method or in accordance with equipment manufacturer's printed instructions and recharge system.

3.9.3 Start-Up and Initial Operational Tests

Test the air conditioning systems and systems components for proper operation. Adjust safety and automatic control instruments as necessary to ensure proper operation and sequence. Conduct operational tests for not less than 8 hours.

3.9.4 Performance Tests

Upon completion of evacuation, charging, startup, final leak testing, and proper adjustment of controls, test the systems to demonstrate compliance with performance and capacity requirements. Test systems for not less than 8 hours, record readings hourly. Perform the test in accordance with Section 23 05 93.00 22 TESTING, ADJUSTING, AND BALANCING FOR MECHANICAL SYSTEMS. At the end of the test period, average the readings, and the average shall be considered to be the system performance.

-- End of Section --

SECTION 23 82 00.00 20

TERMINAL HEATING UNITS
02/16

PART 1 GENERAL

1.1 REFERENCES

The publications listed below form a part of this specification to the extent referenced. The publications are referred to within the text by the basic designation only.

ASTM INTERNATIONAL (ASTM)

ASTM A123/A123M	(2017) Standard Specification for Zinc (Hot-Dip Galvanized) Coatings on Iron and Steel Products
ASTM A653/A653M	(2015; E 2016) Standard Specification for Steel Sheet, Zinc-Coated (Galvanized) or Zinc-Iron Alloy-Coated (Galvannealed) by the Hot-Dip Process
ASTM B117	(2016) Standard Practice for Operating Salt Spray (Fog) Apparatus
ASTM D1654	(2008; R 2016) Standard Test Method for Evaluation of Painted or Coated Specimens Subjected to Corrosive Environments

NATIONAL ELECTRICAL MANUFACTURERS ASSOCIATION (NEMA)

NEMA ICS 2	(2000; R 2005; Errata 2008) Industrial Control and Systems Controllers, Contactors, and Overload Relays Rated 600 V
NEMA ICS 6	(1993; R 2011) Industrial Control and Systems: Enclosures
NEMA MG 1	(2016) Motors and Generators

NATIONAL FIRE PROTECTION ASSOCIATION (NFPA)

NFPA 70	(2017) National Electrical Code
NFPA 90A	(2015) Standard for the Installation of Air Conditioning and Ventilating Systems
NFPA 90B	(2015) Standard for the Installation of Warm Air Heating and Air Conditioning Systems

1.2 RELATED REQUIREMENTS

Section 23 03 00.00 20 BASIC MECHANICAL MATERIALS AND METHODS, applies to this section with additions and modifications specified herein.

1.3 SUBMITTALS

Government approval is required for submittals with a "G" designation; submittals not having a "G" designation are for Contractor Quality Control approval. Submittals with an "S" are for inclusion in the Sustainability Notebook, in conformance to Section 01 33 29 SUSTAINABILITY REPORTING. Submit the following in accordance with Section 01 33 00 SUBMITTAL PROCEDURES:

SD-03 Product Data

Unit Heaters

SD-10 Operation and Maintenance Data

Unit Heaters, Data Package 2

Submit in accordance with Section 01 78 23 OPERATION AND MAINTENANCE DATA and 01 78 24.00 20 FACILITY ELECTRONIC OPERATION AND MAINTENANCE SUPPORT INFORMATION (eOMSI).

SD-11 Closeout Submittals

Energy Efficient Equipment for Heating and Cooling Units; S

PART 2 PRODUCTS

2.1 PRODUCT SUSTAINABILITY CRITERIA

For products in this section, where applicable and to extent allowed by performance criteria, provide and document the following:

2.1.1 Energy Efficient Equipment for Heating and Cooling Units

Provide documentation in conformance with Section 01 33 29 SUSTAINABILITY REPORTING paragraph ENERGY EFFICIENT EQUIPMENT that the heating and cooling units meet energy efficiency requirements as outlined in this section.

2.2 UNIT HEATERS

Self-contained and factory assembled, propeller fan with capacities expressed as Btu per hour output and cubic foot-per-minute air delivery, operating conditions, and mounting arrangements as indicated. Average fan bearing life must be minimum 200,000 hours at operating conditions. Provide fan motor with direct drive. Construct fan-guard motor mount of steel wire. Equip each heater with individually adjustable package discharge louver. Louvers may be substituted by discharge cones or diffusers. Provide thermostats. Furnish circuit breaker disconnect switch.

2.2.1 Electric Unit Heater

UL listed; wattage, voltage, phase, and number of steps as indicated. Provide control-circuit terminals and single source of power supply. Heater 5 Kw and larger must be three-phase, with load balanced on each of the three phases. Limit leaving air temperature below 140 degrees F at 60 degrees F entering air.

2.2.1.1 Casing

Minimum 21 gage steel.

2.2.1.2 Heating Element

Nickel-chromium heating wire element, free from expansion noise and 60 Hz hum. Embed element in magnesium-oxide insulating refractory. Seal element in high-mass steel or corrosion-resisting metallic sheath with fins. Enclose element ends in terminal box. Space fins at maximum six fins per inch. Limit fin surface temperature 550 degrees Fat any point during normal operation.

2.2.1.3 Controls

Include limit controls for thermal overheat protection of heaters. For remote thermostatic operation, provide contactor rated for 100,000 duty cycles. Provide a control transformer to supply 24-volt thermostat control circuit for each heater. Provide room thermostat for pilot duty.

2.2.1.4 Wiring

Completely factory-prewired to terminal strips, ready to receive branch circuit and control connections for 140 degrees F copper wiring.

2.3 FAN

Provide steel or aluminum fans with ball or roller bearings for motors over 1/8 horsepower (hp) and sleeve bearings for motors 1/8 hp and under. Provide sleeve bearings with oil reservoir, if not permanently lubricated.

2.4 MOTOR AND STARTER

NEMA MG 1, and NEMA ICS 2, and NEMA ICS 6, respectively. Provide continuous-duty motor with built-in automatic reset thermal overload protection. For motor 1/2 hp and larger, use three-phase. Provide single-phase motor of permanent split capacitor or capacitor start. Limit motor speed at 1800 r/min. Wire motor to heater power supply source.

2.5 NOISE, VIBRATION AND SEISMIC CONTROLS

Section 22 05 48.00 20 MECHANICAL SOUND VIBRATION AND SEISMIC CONTROL.

2.6 SOURCE QUALITY CONTROL

Special protection is not required for equipment that has a zinc coating conforming to ASTM A123/A123M or ASTM A653/A653M. Otherwise, protect affected equipment items by manufacturers' corrosion-inhibiting coating or paint system that has proved capable of withstanding salt-spray test in accordance with ASTM B117. Test indoor and outdoor equipment for 125 hours; test outdoor equipment used in a marine atmosphere for 500 hours. For each specimen, perform a scratch test as defined in ASTM D1654.

PART 3 EXECUTION

3.1 INSTALLATION

Install equipment where indicated and as recommended by manufacturer's recommendations, NFPA 90A, and NFPA 90B.

3.1.1 Suspensions of Equipment

Provide equipment supports including beam clamps, turnbuckles and twist links or weld-wire chains, wire ropes with rope clips and rope thimbles, threaded-eye rod hangers with lock nuts and heat-duct hangers, threaded-eye bolts with expansion screws, brackets, platform and mounting frame, and vibration isolators. Locate equipment in such a manner that working space is available for servicing, such as vacuum pump and burner removal, access to automatic controls, and lubrication. Provide electrical isolation of dissimilar metals. Clean interior of casings or cabinets before and after completion of installation.

3.1.2 Electrical Work

NFPA 70 and Division 26, ELECTRICAL. When replacing original control wires, provide No. 16 AWG with minimum 105 degrees C insulation.

3.2 FIELD QUALITY CONTROL

Administer, schedule, and conduct specified tests. Furnish personnel, instruments and equipment for such tests. Correct defects and repeat the respective inspections and tests. Conduct inspections and testing in the presence of the Contracting Officer.

3.2.1 Test Instruments and Apparatus

Provide instruments and apparatus currently certified as being accurate to within one percent of their full scale. Use gages with a maximum scale between 1-1/2 and 2 times test pressure.

3.2.2 Field Inspection

Prior to initial operation, inspect equipment installation to ensure that indicated and specified requirements have been met.

3.2.3 Field Tests

3.2.3.1 Insulation-Resistance Tests for Electrical Equipment

At the completion of wiring, test 600 volt wiring to verify that no short circuits exist before or after the attachment of electrical heating equipment to the power source. Make tests with an instrument which applies a voltage of approximately 500 volts for a direct reading of insulation resistance.

3.2.3.2 Operational Tests

After completing fire tests and insulation-resistance tests, operate equipment continuously under varying load conditions to verify functioning of combustion controls, electrical controls, flame safeguard controls, safety interlocks, and specified operating sequence. Run each test for a minimum period of one hour.

-- End of Section --

SECTION 26 00 00.00 20

BASIC ELECTRICAL MATERIALS AND METHODS
07/06

PART 1 GENERAL

1.1 REFERENCES

The publications listed below form a part of this specification to the extent referenced. The publications are referred to in the text by the basic designation only.

ASTM INTERNATIONAL (ASTM)

ASTM D709	(2016) Laminated Thermosetting Materials

INSTITUTE OF ELECTRICAL AND ELECTRONICS ENGINEERS (IEEE)

IEEE 100	(2000; Archived) The Authoritative Dictionary of IEEE Standards Terms
IEEE C2	(2012; Errata 1 2012; INT 1-4 2012; Errata 2 2013; INT 5-7 2013; INT 8-10 2014; INT 11 2015; INT 12 2016) National Electrical Safety Code
IEEE C57.12.28	(2014) Standard for Pad-Mounted Equipment - Enclosure Integrity
IEEE C57.12.29	(2014) Standard for Pad-Mounted Equipment - Enclosure Integrity for Coastal Environments

NATIONAL ELECTRICAL MANUFACTURERS ASSOCIATION (NEMA)

NEMA 250	(2014) Enclosures for Electrical Equipment (1000 Volts Maximum)

NATIONAL FIRE PROTECTION ASSOCIATION (NFPA)

NFPA 70	(2014; AMD 1 2013; Errata 1 2013; AMD 2 2013; Errata 2 2013; AMD 3 2014; Errata 3-4 2014; AMD 4-6 2014) National Electrical Code

1.2 RELATED REQUIREMENTS

This section applies to certain sections of Division 13, SPECIAL CONSTRUCTION, Divisions 22 and 23, PLUMBING and HEATING VENTILATING AND AIR CONDITIONING. This section applies to all sections of Division 26 and 33, ELECTRICAL and UTILITIES, of this project specification unless specified otherwise in the individual sections. This section has been incorporated into, and thus, does not apply to, and is not referenced in the following sections.

Section 26 12 19.10 THREE-PHASE PAD MOUNTED TRANSFORMERS
Section 26 20 00 INTERIOR DISTRIBUTION SYSTEM

Section 26 51 00 INTERIOR LIGHTING
Section 26 56 00 EXTERIOR LIGHTING
Section 27 10 00 BUILDING TELECOMMUNICATIONS CABLING SYSTEM
Section 33 71 02 UNDERGROUND ELECTRICAL DISTRIBUTION
Section 33 82 00 TELECOMMUNICATIONS OUTSIDE PLANT (OSP)

1.3 DEFINITIONS

a. Unless otherwise specified or indicated, electrical and electronics terms used in these specifications, and on the drawings, shall be as defined in IEEE 100.

b. The technical sections referred to herein are those specification sections that describe products, installation procedures, and equipment operations and that refer to this section for detailed description of submittal types.

c. The technical paragraphs referred to herein are those paragraphs in PART 2 - PRODUCTS and PART 3 - EXECUTION of the technical sections that describe products, systems, installation procedures, equipment, and test methods.

1.4 ADDITIONAL SUBMITTALS INFORMATION

Submittals required in other sections that refer to this section must conform to the following additional requirements as applicable.

1.4.1 Shop Drawings (SD-02)

Include wiring diagrams and installation details of equipment indicating proposed location, layout and arrangement, control panels, accessories, piping, ductwork, and other items that must be shown to ensure a coordinated installation. Wiring diagrams shall identify circuit terminals and indicate the internal wiring for each item of equipment and the interconnection between each item of equipment. Drawings shall indicate adequate clearance for operation, maintenance, and replacement of operating equipment devices.

1.4.2 Product Data (SD-03)

Submittal shall include performance and characteristic curves.

1.5 QUALITY ASSURANCE

1.5.1 Regulatory Requirements

In each of the publications referred to herein, consider the advisory provisions to be mandatory, as though the word, "shall" had been substituted for "should" wherever it appears. Interpret references in these publications to the "authority having jurisdiction," or words of similar meaning, to mean the Contracting Officer. Equipment, materials, installation, and workmanship shall be in accordance with the mandatory and advisory provisions of NFPA 70 unless more stringent requirements are specified or indicated.

1.5.2 Standard Products

Provide materials and equipment that are products of manufacturers regularly engaged in the production of such products which are of equal

material, design and workmanship. Products shall have been in satisfactory commercial or industrial use for 2 years prior to bid opening. The 2-year period shall include applications of equipment and materials under similar circumstances and of similar size. The product shall have been on sale on the commercial market through advertisements, manufacturers' catalogs, or brochures during the 2-year period. Where two or more items of the same class of equipment are required, these items shall be products of a single manufacturer; however, the component parts of the item need not be the products of the same manufacturer unless stated in the technical section.

1.5.2.1 Alternative Qualifications

Products having less than a 2-year field service record will be acceptable if a certified record of satisfactory field operation for not less than 6000 hours, exclusive of the manufacturers' factory or laboratory tests, is furnished.

1.5.2.2 Material and Equipment Manufacturing Date

Products manufactured more than 3 years prior to date of delivery to site shall not be used, unless specified otherwise.

1.6 WARRANTY

The equipment items shall be supported by service organizations which are reasonably convenient to the equipment installation in order to render satisfactory service to the equipment on a regular and emergency basis during the warranty period of the contract.

1.7 POSTED OPERATING INSTRUCTIONS

Provide for each system and principal item of equipment as specified in the technical sections for use by operation and maintenance personnel. The operating instructions shall include the following:

a. Wiring diagrams, control diagrams, and control sequence for each principal system and item of equipment.

b. Start up, proper adjustment, operating, lubrication, and shutdown procedures.

c. Safety precautions.

d. The procedure in the event of equipment failure.

e. Other items of instruction as recommended by the manufacturer of each system or item of equipment.

Print or engrave operating instructions and frame under glass or in approved laminated plastic. Post instructions where directed. For operating instructions exposed to the weather, provide weather-resistant materials or weatherproof enclosures. Operating instructions shall not fade when exposed to sunlight and shall be secured to prevent easy removal or peeling.

1.8 MANUFACTURER'S NAMEPLATE

Each item of equipment shall have a nameplate bearing the manufacturer's

name, address, model number, and serial number securely affixed in a conspicuous place; the nameplate of the distributing agent will not be acceptable.

1.9 FIELD FABRICATED NAMEPLATES

ASTM D709. Provide laminated plastic nameplates for each equipment enclosure, relay, switch, and device; as specified in the technical sections or as indicated on the drawings. Each nameplate inscription shall identify the function and, when applicable, the position. Nameplates shall be melamine plastic, 0.125 inch thick, white with black center core. Surface shall be matte finish. Corners shall be square. Accurately align lettering and engrave into the core. Minimum size of nameplates shall be one by 2.5 inches. Lettering shall be a minimum of 0.25 inch high normal block style.

1.10 WARNING SIGNS

Provide warning signs for the enclosures of electrical equipment including substations, pad-mounted transformers, pad-mounted switches, generators, and switchgear having a nominal rating exceeding 600 volts.

a. When the enclosure integrity of such equipment is specified to be in accordance with IEEE C57.12.28 or IEEE C57.12.29, such as for pad-mounted transformers, provide self-adhesive warning signs on the outside of the high voltage compartment door(s). Sign shall be a decal and shall have nominal dimensions of 7 by 10 inches with the legend "DANGER HIGH VOLTAGE" printed in two lines of nominal 2 inch high letters. The word "DANGER" shall be in white letters on a red background and the words "HIGH VOLTAGE" shall be in black letters on a white background. Decal shall be Panduit No. PPSO710D72 or approved equal.

1.11 ELECTRICAL REQUIREMENTS

Electrical installations shall conform to IEEE C2, NFPA 70, and requirements specified herein.

1.12 INSTRUCTION TO GOVERNMENT PERSONNEL

Where specified in the technical sections, furnish the services of competent instructors to give full instruction to designated Government personnel in the adjustment, operation, and maintenance of the specified systems and equipment, including pertinent safety requirements as required. Instructors shall be thoroughly familiar with all parts of the installation and shall be trained in operating theory as well as practical operation and maintenance work. Instruction shall be given during the first regular work week after the equipment or system has been accepted and turned over to the Government for regular operation. The number of man-days (8 hours per day) of instruction furnished shall be as specified in the individual section. When more than 4 man-days of instruction are specified, use approximately half of the time for classroom instruction. Use other time for instruction with equipment or system. When significant changes or modifications in the equipment or system are made under the terms of the contract, provide additional instructions to acquaint the operating personnel with the changes or modifications.

PART 2 PRODUCTS

2.1 FACTORY APPLIED FINISH

Electrical equipment shall have factory-applied painting systems which shall, as a minimum, meet the requirements of NEMA 250 corrosion-resistance test.

PART 3 EXECUTION

3.1 FIELD APPLIED PAINTING

Paint electrical equipment as required to match finish of adjacent surfaces or to meet the indicated or specified safety criteria. Painting shall be as specified in the section specifying the associated electrical equipment.

3.2 FIELD FABRICATED NAMEPLATE MOUNTING

Provide number, location, and letter designation of nameplates as indicated. Fasten nameplates to the device with a minimum of two sheet-metal screws or two rivets.

3.3 WARNING SIGN MOUNTING

Provide the number of signs required to be readable from each accessible side, but space the signs a maximum of 30 feet apart.

-- End of Section --

SECTION 26 08 00

APPARATUS INSPECTION AND TESTING
08/08

PART 1 GENERAL

1.1 REFERENCES

The publications listed below form a part of this specification to the extent referenced. The publications are referred to within the text by the basic designation only.

INTERNATIONAL ELECTRICAL TESTING ASSOCIATION (NETA)

NETA ATS	(2013) Standard for Acceptance Testing Specifications for Electrical Power Equipment and Systems

1.2 RELATED REQUIREMENTS

Section 26 00 00.00 20 BASIC ELECTRICAL MATERIALS AND METHODS applies to this section with additions and modifications specified herein.

1.3 SUBMITTALS

Government approval is required for submittals with a "G" designation; submittals not having a "G" designation are for Contractor Quality Control approval. Submittals with an "S" are for inclusion in the Sustainability Notebook, in conformance to Section 01 33 29 SUSTAINABILITY REPORTING. Submit the following in accordance with Section 01 33 00 SUBMITTAL PROCEDURES:

SD-06 Test Reports

Acceptance tests and inspections; G

SD-07 Certificates

Qualifications of organization, and lead engineering technician; G

Acceptance test and inspections procedure; G

1.4 QUALITY ASSURANCE

1.4.1 Qualifications

Contractor shall engage the services of a qualified testing organization to provide inspection, testing, calibration, and adjustment of the electrical distribution system and generation equipment listed in paragraph entitled "Acceptance Tests and Inspections" herein. Organization shall be independent of the supplier, manufacturer, and installer of the equipment. The organization shall be a first tier subcontractor. No work required by this section of the specification shall be performed by a second tier subcontractor.

a. Submit name and qualifications of organization. Organization shall have been regularly engaged in the testing of electrical materials,

devices, installations, and systems for a minimum of 5 years. The organization shall have a calibration program, and test instruments used shall be calibrated in accordance with NETA ATS.

b. Submit name and qualifications of the lead engineering technician performing the required testing services. Include a list of three comparable jobs performed by the technician with specific names and telephone numbers for reference. Testing, inspection, calibration, and adjustments shall be performed by an engineering technician, certified by NETA or the National Institute for Certification in Engineering Technologies (NICET) with a minimum of 5 years' experience inspecting, testing, and calibrating electrical distribution and generation equipment, systems, and devices.

1.4.2 Acceptance Tests and Inspections Reports

Submit certified copies of inspection reports and test reports. Reports shall include certification of compliance with specified requirements, identify deficiencies, and recommend corrective action when appropriate. Type and neatly bind test reports to form a part of the final record. Submit test reports documenting the results of each test not more than 10 days after test is completed.

1.4.3 Acceptance Test and Inspections Procedure

Submit test procedure reports for each item of equipment to be field tested at least 45 days prior to planned testing date. Do not perform testing until after test procedure has been approved.

PART 2 PRODUCTS

Not used.

PART 3 EXECUTION

3.1 ACCEPTANCE TESTS AND INSPECTIONS

Testing organization shall perform acceptance tests and inspections. Test methods, procedures, and test values shall be performed and evaluated in accordance with NETA ATS, the manufacturer's recommendations, and paragraph entitled "Field Quality Control" of each applicable specification section. Tests identified as optional in NETA ATS are not required unless otherwise specified. Equipment shall be placed in service only after completion of required tests and evaluation of the test results have been completed. Contractor shall supply to the testing organization complete sets of shop drawings, settings of adjustable devices, and other information necessary for an accurate test and inspection of the system prior to the performance of any final testing. Contracting Officer shall be notified at least 14 days in advance of when tests will be conducted by the testing organization. Perform acceptance tests and inspections on applicable equipment and systems specified in the following sections:

a. Section 26 32 13.10 22 LIQUID PETROLEUM GAS-FIRED SINGLE OPERATION GENERATOR SETS. Functional engine shutdown tests, vibration base-line test, and load bank test shall not be performed by the testing organization. These tests shall be performed by the start-up engineer.

b. Section 26 12 19.10 THREE-PHASE PAD-MOUNTED TRANSFORMERS

c. Section 33 71 02 UNDERGROUND ELECTRICAL DISTRIBUTION. Medium voltage cables and grounding systems only.

d. Section 26 36 23.00 20 AUTOMATIC TRANSFER SWITCHES

3.2 SYSTEM ACCEPTANCE

Final acceptance of the system is contingent upon satisfactory completion of acceptance tests and inspections.

3.3 PLACING EQUIPMENT IN SERVICE

A representative of the approved testing organization shall be present when equipment tested by the organization is initially energized and placed in service.

-- End of Section --

SECTION 26 12 19.10

THREE-PHASE PAD-MOUNTED TRANSFORMERS
02/12

PART 1 GENERAL

1.1 REFERENCES

The publications listed below form a part of this specification to the extent referenced. The publications are referred to in the text by the basic designation only.

ASTM INTERNATIONAL (ASTM)

ASTM A240/A240M	(2016) Standard Specification for Chromium and Chromium-Nickel Stainless Steel Plate, Sheet, and Strip for Pressure Vessels and for General Applications
ASTM D1535	(2014) Specifying Color by the Munsell System
ASTM D877/D877M	(2013) Standard Test Method for Dielectric Breakdown Voltage of Insulating Liquids Using Disk Electrodes
ASTM D92	(2012b) Standard Test Method for Flash and Fire Points by Cleveland Open Cup Tester
ASTM D97	(2016) Pour Point of Petroleum Products

FM GLOBAL (FM)

FM APP GUIDE	(updated on-line) Approval Guide http://www.approvalguide.com/

INSTITUTE OF ELECTRICAL AND ELECTRONICS ENGINEERS (IEEE)

IEEE 100	(2000; Archived) The Authoritative Dictionary of IEEE Standards Terms
IEEE 386	(2006; INT 1 2011) Standard for Separable Insulated Connector Systems for Power Distribution Systems Above 600V
IEEE C2	(2012; Errata 1 2012; INT 1-4 2012; Errata 2 2013; INT 5-7 2013; INT 8-10 2014; INT 11 2015; INT 12 2016) National Electrical Safety Code
IEEE C37.47	(2011) Standard for High Voltage Current-Limiting Type Distribution Class Fuses and Fuse Disconnecting Switches
IEEE C57.12.00	(2015) Standard General Requirements for Liquid-Immersed Distribution, Power, and Regulating Transformers

IEEE C57.12.28	(2014) Standard for Pad-Mounted Equipment - Enclosure Integrity
IEEE C57.12.34	(2009) Standard for Requirements for Pad-Mounted, Compartmental-Type, Self-Cooled, Three-Phase Distribution Transformers, 5 MVA and Smaller; High Voltage, 34.5 kV Nominal System Voltage and Below; Low Voltage, 15 kV Nominal System Voltage and Below
IEEE C57.12.90	(2015) Standard Test Code for Liquid-Immersed Distribution, Power, and Regulating Transformers
IEEE C57.98	(2011) Guide for Transformer Impulse Tests
IEEE C62.11	(2012) Standard for Metal-Oxide Surge Arresters for Alternating Current Power Circuits (>1kV)

INTERNATIONAL ELECTRICAL TESTING ASSOCIATION (NETA)

NETA ATS	(2013) Standard for Acceptance Testing Specifications for Electrical Power Equipment and Systems

NATIONAL FIRE PROTECTION ASSOCIATION (NFPA)

NFPA 70	(2014; AMD 1 2013; Errata 1 2013; AMD 2 2013; Errata 2 2013; AMD 3 2014; Errata 3-4 2014; AMD 4-6 2014) National Electrical Code

ORGANISATION FOR ECONOMIC CO-OPERATION AND DEVELOPMENT (OECD)

OECD Test 203	(1992) Fish Acute Toxicity Test

U.S. ENVIRONMENTAL PROTECTION AGENCY (EPA)

EPA 712-C-98-075	(1998) Fate, Transport and Transformation Test Guidelines - OPPTS 835.3100- "Aerobic Aquatic Biodegradation"
EPA 821-R-02-012	(2002) Methods for Measuring the Acute Toxicity of Effluents and Receiving Waters to Freshwater and Marine Organisms

U.S. NATIONAL ARCHIVES AND RECORDS ADMINISTRATION (NARA)

10 CFR 431	Energy Efficiency Program for Certain Commercial and Industrial Equipment

UNDERWRITERS LABORATORIES (UL)

UL 467	(2013) Grounding and Bonding Equipment

1.2 RELATED REQUIREMENTS

Section 26 08 00 APPARATUS INSPECTION AND TESTING applies to this section, with the additions and modifications specified herein.

1.3 DEFINITIONS

Unless otherwise specified or indicated, electrical and electronics terms used in these specifications, and on the drawings, shall be as defined in IEEE 100.

1.4 SUBMITTALS

Government approval is required for submittals with a "G" designation; submittals not having a "G" designation are for Contractor Quality Control approval. Submittals with an "S" are for inclusion in the Sustainability Notebook, in conformance with Section 01 33 29 SUSTAINABILITY REPORTING. Submit the following in accordance with Section 01 33 00 SUBMITTAL PROCEDURES:

SD-02 Shop Drawings

Pad-mounted transformer drawings; G

SD-03 Product Data

Pad-mounted transformers; G

Submittal shall include manufacturer's information for each component, device, insulating fluid, and accessory provided with the transformer.

SD-06 Test Reports

Acceptance checks and tests; G

Submittal shall include acceptance criteria and limits for each test in accordance with NETA ATS "Test Values".

SD-07 Certificates

Transformer Efficiencies; G

Submit certification, including supporting calculations, from the manufacturer indicating conformance with the paragraph entitled "Specified Transformer Efficiencies."

SD-09 Manufacturer's Field Reports

Pad-mounted transformer design tests; G

Pad-mounted transformerroutine and other tests; G

SD-10 Operation and Maintenance Data

Transformer(s), Data Package 5; G

Submit operation and maintenance data in accordance with Section 01 78 23 OPERATION AND MAINTENANCE DATA and as specified herein.

SD-11 Closeout Submittals

Transformer test schedule; G

Submit report of test results as specified by paragraph entitled "Field Quality Control."

1.4.1 Government Submittal Review

Code OPQC16, Marine Coprs IPT, NAVFAC MIDLANT, Naval Facilities Engineering Command will review and approve all submittals in this section requiring Government approval.

1.4.2 Reduced Submittal Requirements

Transformers designed and manufactured by ABB in Jefferson City, MO; by Cooper Power Systems in Waukesha, WI; by ERMCO in Dyersburg, TN; or by Howard Industries in Laurel, MS need not submit the entire submittal package requirements of this contract. Instead, the following items shall be submitted:

a. A certification, signed by the manufacturer, stating that the technical requirements of this specification shall be met.

b. An outline drawing of the transformer with devices identified (paragraph entitled "Pad-Mounted Transformer Drawings", item a).

c. ANSI nameplate data of the transformer (paragraph entitled "Pad-Mounted Transformer Drawings", item b).

d. Manufacturer's published time-current curves (properly overlaid on one full size logarithmic paper) of the transformer high side fuses (paragraph entitled "Pad-Mounted Transformer Drawings", item e) with transformer damage curve, inrush curve, and thru fault current indicated.

e. Routine and other tests (in PART 2, see paragraph entitled "Source Quality Control", subparagraph entitled "Routine and Other Tests"), shall be conducted by the manufacturer and may be witnessed by the government. Provide transformer test schedule required by submittal item "SD-11 Closeout Submittals". Provide certified copies of the tests.

f. Provide acceptance test reports required by submittal item "SD-06 Test Reports".

g. Provide operation and maintenance manuals required by submittal item "SD-10 Operation and Maintenance Data".

1.5 QUALITY ASSURANCE

1.5.1 Pad-Mounted Transformer Drawings

Drawings shall indicate, but not be limited to the following:

a. An outline drawing, with front, top, and side views.

b. ANSI nameplate data.

c. Elementary diagrams and wiring diagrams .

d. One-line diagram, including switch(es).

e. Manufacturer's published time-current curves (on full size logarithmic paper) of the transformer high side fuses.

1.5.2 Regulatory Requirements

In each of the publications referred to herein, consider the advisory provisions to be mandatory, as though the word, "shall" had been substituted for "should" wherever it appears. Interpret references in these publications to the "authority having jurisdiction," or words of similar meaning, to mean the Contracting Officer. Equipment, materials, installation, and workmanship shall be in accordance with the mandatory and advisory provisions of NFPA 70 unless more stringent requirements are specified or indicated.

1.5.3 Standard Products

Provide materials and equipment that are products of manufacturers regularly engaged in the production of such products which are of equal material, design and workmanship. Products shall have been in satisfactory commercial or industrial use for 2 years prior to bid opening. The 2-year period shall include applications of equipment and materials under similar circumstances and of similar size. The product shall have been on sale on the commercial market through advertisements, manufacturers' catalogs, or brochures during the 2-year period. Where two or more items of the same class of equipment are required, these items shall be products of a single manufacturer; however, the component parts of the item need not be the products of the same manufacturer unless stated in this section.

1.5.3.1 Alternative Qualifications

Products having less than a 2-year field service record will be acceptable if a certified record of satisfactory field operation for not less than 6000 hours, exclusive of the manufacturers' factory or laboratory tests, is furnished.

1.5.3.2 Material and Equipment Manufacturing Date

Products manufactured more than 3 years prior to date of delivery to site shall not be used, unless specified otherwise.

1.6 MAINTENANCE

1.6.1 Additions to Operation and Maintenance Data

In addition to requirements of Data Package 5, include the following on the actual transformer(s) provided:

a. An instruction manual with pertinent items and information highlighted

b. An outline drawing, front, top, and side views

c. Prices for spare parts and supply list

d. Routine and field acceptance test reports

e. Fuse curves for primary fuses

f. Actual nameplate diagram

g. Date of purchase

1.7 WARRANTY

The equipment items shall be supported by service organizations which are reasonably convenient to the equipment installation in order to render satisfactory service to the equipment on a regular and emergency basis during the warranty period of the contract.

PART 2 PRODUCTS

2.1 PRODUCT COORDINATION

Products and materials not considered to be pad-mounted transformers and related accessories are specified in Section 26 20 00 INTERIOR DISTRIBUTION SYSTEM, and Section 33 71 02 UNDERGROUND ELECTRICAL DISTRIBUTION.

2.2 THREE-PHASE PAD-MOUNTED TRANSFORMERS

IEEE C57.12.34, IEEE C57.12.28 and as specified herein.

2.2.1 Compartments

The high- and low-voltage compartments shall be separated by steel isolating barriers extending the full height and depth of the compartments. Compartment doors: hinged lift-off type with stop in open position and three-point latching.

2.2.1.1 High Voltage, Dead-Front

High-voltage compartment shall contain the incoming line, insulated high-voltage load-break connectors, bushing well inserts, six high-voltage bushing wells configured for loop feed application, load-break switch handle(s), access to oil-immersed bayonet fuses, dead-front surge arresters, tap changer handle, connector parking stands, and ground pad.

a. Insulated high-voltage load-break connectors: IEEE 386, rated 15 kV, 95 kV BIL. Current rating: 200 amperes rms continuous. Short time rating: 10,000 amperes rms symmetrical for a time duration of 0.17 seconds. Connector shall have a steel reinforced hook-stick eye, grounding eye, test point, and arc-quenching contact material.

b. Bushing well inserts: IEEE 386, 200 amperes, 15 kV Class. Provide a bushing well insert for each bushing well unless indicated otherwise.

c. Load-break switch

Radial-feed oil-immersed type rated at 15 kV, 95 kV BIL, with a continuous current rating and load-break rating of 200 amperes, and a make-and-latch rating of 12,000 rms amperes symmetrical. Locate the switch handle in the high-voltage compartment.

d. Provide bayonet type, oil-immersed, expulsion fuses in series with

oil-immersed, partial-range, current-limiting fuses. Bayonet fuse links shall sense both high currents and high oil temperature in order to provide thermal protection to the transformer. Coordinate transformer protection with expulsion fuse clearing low-current faults and current-limiting fuse clearing high-current faults beyond the interrupting rating of the expulsion fuse. In order to eliminate or minimize oil spills, the bayonet fuse assembly shall include an oil retention valve inside the housing which closes when the fuse holder is removed and an external drip shield. Warning shall be conspicuously displayed within the high-voltage compartment cautioning against removing or inserting fuses unless the load-break switch is in the open position and the tank pressure has been released.

Bayonet fuse assembly: 150 kV BIL.

Oil-immersed current-limiting fuses: IEEE C37.47; 50,000 rms amperes symmetrical interrupting rating at the system voltage specified. Connect current-limiting fuses ahead of the radial-feed load-break switch.

e. Surge arresters: IEEE C62.11, rated 10 kV, fully shielded, dead-front, metal-oxide-varistor, elbow type with resistance-graded gap. Provide three arresters for radial feed circuits.

f. Parking stands: Provide a parking stand near each bushing.

2.2.1.2 Low Voltage

Low-voltage compartment shall contain low-voltage bushings with NEMA spade terminals, accessories, metering, stainless steel or laser-etched anodized aluminum diagrammatic transformer nameplate, and ground pad.

a. Accessories shall include drain valve with sampler device, fill plug, pressure relief device, liquid level gage, pressure-vacuum gage, and dial type thermometer with maximum temperature indicator.
b. Metering: Provide as specified in Section 26 27 14.00 20 ELECTRICITY METERING.

2.2.2 Transformer

a. Less-flammable liquid-insulated, two winding, 60 hertz, 65 degrees C rise above a 30 degrees C average ambient, self-cooled type.

b. Transformer shall be rated 300 kVA.

c. Transformer voltage ratings: 12,470 V Delta - 208/120 V GrdY.

d. Tap changer shall be externally operated, manual type for changing tap setting when the transformer is de-energized. Provide four 2.5 percent full capacity taps, two above and two below rated primary voltage. Tap changers shall clearly indicate which tap setting is in use.

e. Minimum tested percent impedance at 85 degrees C shall not be less than the following values:

2.87 for units rated 112.5kVA to 300kVA

f. Audible sound levels shall comply with the following:

kVA	DECIBELS (MAX
300	55

g. Transformer shall include lifting lugs and provisions for jacking under base. The transformer base construction shall be suitable for using rollers or skidding in any direction. Provide transformer top with an access handhole. Transformer shall have its kVA rating conspicuously displayed on its enclosure. The transformer shall have an insulated low-voltage neutral bushing with NEMA spade terminal, and with removable ground strap.

2.2.2.1 Specified Transformer Efficiencies

Provide transformer efficiency calculations utilizing the actual no-load and load loss values obtained during the routine tests performed on the actual transformer(s) prepared for this project. No-load losses (NLL) shall be referenced at 20 degrees C. Load losses (LL) shall be referenced at 55 degrees C and at 50 percent of the nameplate load. The transformer is not acceptable if the calculated transformer efficiency is less than the efficiency indicated in the "KVA / Efficiency" table below. That table is based on requirements contained within 10 CFR 431, Subpart K.

kVA	EFFICIENCY (percent)
300	99.23

2.2.3 Insulating Liquid

a. Less-flammable transformer liquids: NFPA 70 and FM APP GUIDE for less-flammable liquids having a fire point not less than 300 degrees C tested per ASTM D92 and a dielectric strength not less than 33 kV tested per ASTM D877/D877M. Provide identification of transformer as "non-PCB" and "manufacturer's name and type of fluid" on the nameplate.

The fluid shall be a biodegradable electrical insulating and cooling liquid classified by UL and approved by FM as "less flammable" fluids. The fluid shall meet the following fluid properties:

1. Pour point: ASTM D97, less than -15 degree C

2. Aquatic biodegradation: EPA 712-C-98-075, 100 percent

3. Trout toxicity: OECD Test 203, zero mortality of EPA 821-R-02-012, pass

2.2.3.1 Liquid-Filled Transformer Nameplates

Distribution transformers shall be provided with nameplate information in accordance with IEEE C57.12.00 and as modified or supplemented by this section.

2.2.4 Corrosion Protection

Bases and cabinets of transformers shall be corrosion resistant and shall be fabricated of stainless steel conforming to ASTM A240/A240M, Type 304

or 304L. Base shall include any part of pad-mounted transformer that is within 3 inches of concrete pad.

Paint entire transformer assembly Munsell 7GY3.29/1.5 green. Paint coating system shall comply with IEEE C57.12.28 regardless of base, cabinet, and tank material. The Munsell color notation is specified in ASTM D1535.

2.3 WARNING SIGNS

Provide warning signs for the enclosures of pad-mounted transformers having a nominal rating exceeding 600 volts.

a. When the enclosure integrity of such equipment is specified to be in accordance with IEEE C57.12.28, such as for pad-mounted transformers, provide self-adhesive warning signs on the outside of the high voltage compartment door(s). Sign shall be a decal and shall have nominal dimensions of 7 by 10 inches with the legend "DANGER HIGH VOLTAGE" printed in two lines of nominal 2 inch high letters. The word "DANGER" shall be in white letters on a red background and the words "HIGH VOLTAGE" shall be in black letters on a white background. Decal shall be Panduit No. PPSO710D72 or approved equal.

2.4 Arc Flash Warning Label

Provide warning label for the enclosure of pad-mounted transformers. Locate this self-adhesive warning label on the outside of the high voltage compartment door warning of potential electrical arc flash hazards and appropriate PPE required. The label format shall be as indicated.

2.5 GROUNDING AND BONDING

UL 467. Provide grounding and bonding as specified in Section 33 71 02 UNDERGROUND ELECTRICAL DISTRIBUTION.

2.6 CAST-IN-PLACE CONCRETE

Concrete associated with electrical work for other than encasement of underground ducts shall be 4000 psi minimum 28-day compressive strength unless specified otherwise. All concrete shall conform to the requirements of Section 03 30 00 CAST-IN-PLACE CONCRETE.

2.7 SOURCE QUALITY CONTROL

2.7.1 Transformer Test Schedule

The Government reserves the right to witness tests. Provide transformer test schedule for tests to be performed at the manufacturer's test facility. Submit required test schedule and location, and notify the Contracting Officer 30 calendar days before scheduled test date. Notify Contracting Officer 15 calendar days in advance of changes to scheduled date.

a. Test Instrument Calibration

1. The manufacturer shall have a calibration program which assures that all applicable test instruments are maintained within rated accuracy.

2. The accuracy shall be directly traceable to the National Institute of Standards and Technology.

3. Instrument calibration frequency schedule shall not exceed 12 months for both test floor instruments and leased specialty equipment.

4. Dated calibration labels shall be visible on all test equipment.

5. Calibrating standard shall be of higher accuracy than that of the instrument tested.

6. Keep up-to-date records that indicate dates and test results of instruments calibrated or tested. For instruments calibrated by the manufacturer on a routine basis, in lieu of third party calibration, include the following:

   (a) Maintain up-to-date instrument calibration instructions and procedures for each test instrument.

   (b) Identify the third party/laboratory calibrated instrument to verify that calibrating standard is met.

2.7.2 Design Tests

IEEE C57.12.00 states that "design tests are made only on representative apparatus to substantiate the ratings assigned to all other apparatus of basically the same design." Submit design test reports (complete with test data, explanations, formulas, and results), in the same submittal package as the catalog data and drawings for each of the specified transformer(s). Design tests shall have been performed in accordance with IEEE C57.12.90 prior to the award of this contract.

a. Tests shall be certified and signed by a registered professional engineer.

b. Temperature rise: "Basically the same design" for the temperature rise test means a pad-mounted transformer with the same coil construction (such as wire wound primary and sheet wound secondary), the same kVA, the same cooling type (ONAN), the same temperature rise rating, and the same insulating liquid as the transformer specified.

c. Lightning impulse: "Basically the same design" for the lightning impulse dielectric test means a pad-mounted transformer with the same BIL, the same coil construction (such as wire wound primary and sheet wound secondary), and a tap changer, if specified. Design lightning impulse tests shall include the primary windings only of that transformer.

   1. IEEE C57.12.90, paragraph 10.3 entitled "Lightning Impulse Test Procedures," and IEEE C57.98.

   2. State test voltage levels.

   3. Provide photographs of oscilloscope display waveforms or plots of digitized waveforms with test report.

d. Lifting and moving devices: "Basically the same design" requirement for the lifting and moving devices test means a test report confirming

that the lifting device being used is capable of handling the weight of the specified transformer in accordance with IEEE C57.12.34.

e. Pressure: "Basically the same design" for the pressure test means a pad-mounted transformer with a tank volume within 30 percent of the tank volume of the transformer specified.

f. Short circuit: "Basically the same design" for the short circuit test means a pad-mounted transformer with the same kVA as the transformer specified.

2.7.3 Routine and Other Tests

IEEE C57.12.00. Routine and other tests shall be performed in accordance with IEEE C57.12.90 by the manufacturer on each of the actual transformer(s) prepared for this project to ensure that the design performance is maintained in production. Submit test reports, by serial number and receive approval before delivery of equipment to the project site. Required tests and testing sequence shall be as follows:

a. Phase relation

b. Ratio

c. No-load losses (NLL) and excitation current

d. Load losses (LL) and impedance voltage

e. Dielectric

1. Impulse

2. Applied voltage

3. Induced voltage

f. Leak

PART 3 EXECUTION

3.1 INSTALLATION

Electrical installations shall conform to IEEE C2, NFPA 70, and to the requirements specified herein. Provide new equipment and materials unless indicated or specified otherwise.

3.2 GROUNDING

NFPA 70 and IEEE C2, except that grounding systems shall have a resistance to solid earth ground not exceeding 5 ohms.

3.2.1 Grounding Electrodes

Provide driven ground rods as specified in Section 33 71 02 UNDERGROUND ELECTRICAL DISTRIBUTION. Connect ground conductors to the upper end of ground rods by exothermic weld or compression connector. Provide compression connectors at equipment end of ground conductors.

3.2.2 Pad-Mounted Transformer Grounding

Provide separate copper grounding conductors and connect them to the ground loop as indicated. When work in addition to that indicated or specified is required to obtain the specified ground resistance, the provision of the contract covering "Changes" shall apply.

3.2.3 Connections

Make joints in grounding conductors and loops by exothermic weld or compression connector. Exothermic welds and compression connectors shall be installed as specified in Section 33 71 02 UNDERGROUND ELECTRICAL DISTRIBUTION.

3.2.4 Grounding and Bonding Equipment

UL 467, except as indicated or specified otherwise.

3.3 INSTALLATION OF EQUIPMENT AND ASSEMBLIES

Install and connect pad-mounted transformers furnished under this section as indicated on project drawings, the approved shop drawings, and as specified herein.

3.4 FIELD APPLIED PAINTING

Where field painting of enclosures is required to correct damage to the manufacturer's factory applied coatings, provide manufacturer's recommended coatings and apply in accordance with manufacturer's instructions.

3.5 FOUNDATION FOR EQUIPMENT AND ASSEMBLIES

Mount transformer on concrete slab. Unless otherwise indicated, the slab shall be at least 8 inches thick, reinforced with a 6 by 6 - W2.9 by W2.9 mesh, placed uniformly 4 inches from the top of the slab. Slab shall be placed on a 6 inch thick, well-compacted gravel base. Top of concrete slab shall be approximately 4 inches above finished grade with gradual slope for drainage. Edges above grade shall have 1/2 inch chamfer. Slab shall be of adequate size to project at least 8 inches beyond the equipment.

Stub up conduits, with bushings, 2 inches into cable wells in the concrete pad. Coordinate dimensions of cable wells with transformer cable training areas.

3.5.1 Cast-In-Place Concrete

Cast-in-place concrete work shall conform to the requirements of Section 03 30 00 CAST-IN-PLACE CONCRETE.

3.5.2 Sealing

When the installation is complete, the Contractor shall seal all entries into the equipment enclosure with an approved sealing method. Seals shall be of sufficient strength and durability to protect all energized live parts of the equipment from rodents, insects, or other foreign matter.

3.6 FIELD QUALITY CONTROL

3.6.1 Performance of Acceptance Checks and Tests

Perform in accordance with the manufacturer's recommendations and include the following visual and mechanical inspections and electrical tests, performed in accordance with NETA ATS.

3.6.1.1 Pad-Mounted Transformers

a. Visual and mechanical inspection

1. Compare equipment nameplate data with specifications and approved shop drawings.

2. Inspect physical and mechanical condition. Check for damaged or cracked insulators and leaks.

3. Inspect anchorage, alignment, and grounding.

4. Verify the presence of PCB content labeling.

5. Verify the bushings and transformer interiors are clean.

6. Inspect all bolted electrical connections for high resistance using low-resistance ohmmeter, verifying tightness of accessible bolted electrical connections by calibrated torque-wrench method, or performing thermographic survey.

7. Verify correct liquid level in tanks and bushings.

8. Verify that positive pressure is maintained on gas-blanketed transformers.

9. Perform specific inspections and mechanical tests as recommended by manufacturer.

10. Verify de-energized tap changer position is left as specified.

11. Verify the presence of transformer surge arresters.

b. Electrical tests

1. Perform resistance measurements through all bolted connections with low-resistance ohmmeter.

2. Verify proper secondary voltage phase-to-phase and phase-to-neutral after energization and prior to loading.

3.6.1.2 Grounding System

a. Visual and mechanical inspection

1. Inspect ground system for compliance with contract plans and specifications.

b. Electrical tests

1. Perform ground-impedance measurements utilizing the fall-of-potential method. On systems consisting of interconnected ground rods, perform tests after interconnections are complete.

On systems consisting of a single ground rod perform tests before any wire is connected. Take measurements in normally dry weather, not less than 48 hours after rainfall. Use a portable ground testing megger in accordance with manufacturer's instructions to test each ground or group of grounds. The instrument shall be equipped with a meter reading directly in ohms or fractions thereof to indicate the ground value of the ground rod or grounding systems under test.

2. Submit the measured ground resistance of each ground rod and grounding system, indicating the location of the rod and grounding system. Include the test method and test setup (i.e., pin location) used to determine ground resistance and soil conditions at the time the measurements were made.

3.6.1.3 Surge Arresters, Medium- and High-Voltage

a. Visual and mechanical inspection

1. Compare equipment nameplate data with specifications and approved shop drawings.

2. Inspect physical and mechanical condition.

3. Inspect anchorage, alignment, grounding, and clearances.

4. Verify the arresters are clean.

5. Inspect all bolted electrical connections for high resistance using low-resistance ohmmeter, verifying tightness of accessible bolted electrical connections by calibrated torque-wrench method, or performing thermographic survey.

6. Verify that the ground lead on each device is individually attached to a ground bus or ground electrode.

b. Electrical tests

1. Perform resistance measurements through all bolted connections with low-resistance ohmmeter, if applicable.

2. Perform an insulation-resistance test on each arrester, phase terminal-to-ground.

3. Test grounding connection.

3.6.2 Follow-Up Verification

Upon completion of acceptance checks and tests, the Contractor shall show by demonstration in service that circuits and devices are in good operating condition and properly performing the intended function. As an exception to requirements stated elsewhere in the contract, the Contracting Officer shall be given 5 working days advance notice of the dates and times of checking and testing.

-- End of Section --

SECTION 26 20 00

INTERIOR DISTRIBUTION SYSTEM
02/14

PART 1 GENERAL

1.1 REFERENCES

The publications listed below form a part of this specification to the extent referenced. The publications are referred to in the text by the basic designation only.

AMERICAN SOCIETY OF HEATING, REFRIGERATING AND AIR-CONDITIONING ENGINEERS (ASHRAE)

ASHRAE 90.1 - IP	(2013) Energy Standard for Buildings Except Low-Rise Residential Buildings

ASTM INTERNATIONAL (ASTM)

ASTM B1	(2013) Standard Specification for Hard-Drawn Copper Wire
ASTM B8	(2011) Standard Specification for Concentric-Lay-Stranded Copper Conductors, Hard, Medium-Hard, or Soft
ASTM D709	(2016) Laminated Thermosetting Materials

INSTITUTE OF ELECTRICAL AND ELECTRONICS ENGINEERS (IEEE)

IEEE 100	(2000; Archived) The Authoritative Dictionary of IEEE Standards Terms
IEEE 81	(2012) Guide for Measuring Earth Resistivity, Ground Impedance, and Earth Surface Potentials of a Ground System
IEEE C2	(2012; Errata 1 2012; INT 1-4 2012; Errata 2 2013; INT 5-7 2013; INT 8-10 2014; INT 11 2015; INT 12 2016) National Electrical Safety Code

INTERNATIONAL ELECTRICAL TESTING ASSOCIATION (NETA)

NETA ATS	(2013) Standard for Acceptance Testing Specifications for Electrical Power Equipment and Systems

NATIONAL ELECTRICAL MANUFACTURERS ASSOCIATION (NEMA)

ANSI C80.1	(2005) American National Standard for Electrical Rigid Steel Conduit (ERSC)
ANSI C80.3	(2015) American National Standard for Electrical Metallic Tubing (EMT)

NEMA 250	(2014) Enclosures for Electrical Equipment (1000 Volts Maximum)
NEMA FU 1	(2012) Low Voltage Cartridge Fuses
NEMA ICS 1	(2000; R 2015) Standard for Industrial Control and Systems: General Requirements
NEMA ICS 2	(2000; R 2005; Errata 2008) Standard for Controllers, Contactors, and Overload Relays Rated 600 V
NEMA ICS 4	(2015) Terminal Blocks
NEMA ICS 6	(1993; R 2011) Enclosures
NEMA KS 1	(2013) Enclosed and Miscellaneous Distribution Equipment Switches (600 V Maximum)
NEMA MG 1	(2014) Motors and Generators
NEMA MG 10	(2013) Energy Management Guide for Selection and Use of Fixed Frequency Medium AC Squirrel-Cage Polyphase Induction Motors
NEMA MG 11	(1977; R 2012) Energy Management Guide for Selection and Use of Single Phase Motors
NEMA RN 1	(2005; R 2013) Polyvinyl-Chloride (PVC) Externally Coated Galvanized Rigid Steel Conduit and Intermediate Metal Conduit
NEMA ST 20	(1992; R 1997) Standard for Dry-Type Transformers for General Applications
NEMA TC 2	(2013) Standard for Electrical Polyvinyl Chloride (PVC) Conduit
NEMA TC 3	(2015) Standard for Polyvinyl Chloride (PVC) Fittings for Use With Rigid PVC Conduit and Tubing
NEMA TP 1	(2002) Guide for Determining Energy Efficiency for Distribution Transformers
NEMA VE 1	(2009) Standard for Metal Cable Tray Systems
NEMA WD 1	(1999; R 2015) Standard for General Color Requirements for Wiring Devices
NEMA WD 6	(2016) Wiring Devices Dimensions Specifications
NEMA Z535.4	(2011) American National Standard for Product Safety Signs and Labels

NATIONAL FIRE PROTECTION ASSOCIATION (NFPA)

NFPA 70	(2014; AMD 1 2013; Errata 1 2013; AMD 2 2013; Errata 2 2013; AMD 3 2014; Errata 3-4 2014; AMD 4-6 2014) National Electrical Code
NFPA 70E	(2015; ERTA 1 2015) Standard for Electrical Safety in the Workplace
NFPA 780	(2014) Standard for the Installation of Lightning Protection Systems

TELECOMMUNICATIONS INDUSTRY ASSOCIATION (TIA)

TIA-568-C.1	(2009; Add 2 2011; Add 1 2012) Commercial Building Telecommunications Cabling Standard
TIA-569	(2015d) Commercial Building Standard for Telecommunications Pathways and Spaces
TIA-607	(2011b) Generic Telecommunications Bonding and Grounding (Earthing) for Customer Premises

U.S. NATIONAL ARCHIVES AND RECORDS ADMINISTRATION (NARA)

29 CFR 1910.147	Control of Hazardous Energy (Lock Out/Tag Out)

UNDERWRITERS LABORATORIES (UL)

UL 1	(2005; Reprint Jul 2012) Standard for Flexible Metal Conduit
UL 1063	(2006; Reprint Jul 2012) Machine-Tool Wires and Cables
UL 1242	(2006; Reprint Mar 2014) Standard for Electrical Intermediate Metal Conduit -- Steel
UL 1449	(2014; Reprint Mar 2016) Surge Protective Devices
UL 198M	(2003; Reprint Feb 2013) Standard for Mine-Duty Fuses
UL 20	(2010; Reprint Feb 2012) General-Use Snap Switches
UL 360	(2013; Reprint Jan 2015) Liquid-Tight Flexible Steel Conduit
UL 4248-1	(2007; Reprint Oct 2013) UL Standard for Safety Fuseholders - Part 1: General Requirements

UL 4248-12	(2007; Reprint Dec 2012) UL Standard for Safety Fuseholders - Part 12: Class R
UL 44	(2014; Reprint Feb 2015) Thermoset-Insulated Wires and Cables
UL 467	(2013) Grounding and Bonding Equipment
UL 486A-486B	(2013; Reprint Jan 2016) Wire Connectors
UL 486C	(2013; Reprint Jan 2016) Splicing Wire Connectors
UL 489	(2013; Reprint Mar 2014) Molded-Case Circuit Breakers, Molded-Case Switches, and Circuit-Breaker Enclosures
UL 498	(2012; Reprint Jan 2016) Attachment Plugs and Receptacles
UL 50	(2007; Reprint Apr 2012) Enclosures for Electrical Equipment, Non-environmental Considerations
UL 506	(2008; Reprint Oct 2013) Specialty Transformers
UL 508	(1999; Reprint Oct 2013) Industrial Control Equipment
UL 510	(2005; Reprint Jul 2013) Polyvinyl Chloride, Polyethylene and Rubber Insulating Tape
UL 514A	(2013) Metallic Outlet Boxes
UL 514B	(2012; Reprint Nov 2014) Conduit, Tubing and Cable Fittings
UL 514C	(2014; Reprint Dec 2014) Nonmetallic Outlet Boxes, Flush-Device Boxes, and Covers
UL 6	(2007; Reprint Nov 2014) Electrical Rigid Metal Conduit-Steel
UL 651	(2011; Reprint May 2014) Standard for Schedule 40 and 80 Rigid PVC Conduit and Fittings
UL 67	(2009; Reprint Apr 2015) Standard for Panelboards
UL 797	(2007; Reprint Dec 2012) Electrical Metallic Tubing -- Steel
UL 83	(2014) Thermoplastic-Insulated Wires and Cables

UL 854	(2004; Reprint Nov 2014) Standard for Service-Entrance Cables
UL 869A	(2006) Reference Standard for Service Equipment
UL 943	(2006; Reprint Jun 2012) Ground-Fault Circuit-Interrupters
UL 984	(1996; Reprint Sep 2005) Hermetic Refrigerant Motor-Compressors

1.2 DEFINITIONS

Unless otherwise specified or indicated, electrical and electronics terms used in these specifications, and on the drawings, are as defined in IEEE 100.

1.3 SUBMITTALS

Government approval is required for submittals with a "G" designation; submittals not having a "G" designation are for Contractor Quality Control approval. Submittals with an "S" are for inclusion in the Sustainability e Notebook, in conformance to Section 01 33 29 SUSTAINABILITY REPORTING. Submit the following in accordance with Section 01 33 00.

SD-02 Shop Drawings

Panelboards; G

Transformers; G

Cable trays; G

Marking strips drawings; G

SD-03 Product Data

Receptacles; G

Circuit breakers; G

Switches; G

Transformers; G

Motor controllers; G

Manual motor starters; G

Telecommunications Grounding Busbar; G

Surge protective devices; G

Include performance and characteristic curves.

SD-06 Test Reports

600-volt wiring test; G

Grounding system test; G

Transformer tests; G

Ground-fault receptacle test; G

SD-07 Certificates

Fuses; G

SD-09 Manufacturer's Field Reports

Transformer factory tests

1.4 QUALITY ASSURANCE

1.4.1 Fuses

Submit coordination data as specified in paragraph, FUSES of this section.

1.4.2 Regulatory Requirements

In each of the publications referred to herein, consider the advisory provisions to be mandatory, as though the word, "shall" or "must" had been substituted for "should" wherever it appears. Interpret references in these publications to the "authority having jurisdiction," or words of similar meaning, to mean the Contracting Officer. Provide equipment, materials, installation, and workmanship in accordance with the mandatory and advisory provisions of NFPA 70 unless more stringent requirements are specified or indicated.

1.4.3 Standard Products

Provide materials and equipment that are products of manufacturers regularly engaged in the production of such products which are of equal material, design and workmanship and:

a. Have been in satisfactory commercial or industrial use for 2 years prior to bid opening including applications of equipment and materials under similar circumstances and of similar size.

b. Have been on sale on the commercial market through advertisements, manufacturers' catalogs, or brochures during the 2-year period.

c. Where two or more items of the same class of equipment are required, provide products of a single manufacturer; however, the component parts of the item need not be the products of the same manufacturer unless stated in this section.

1.4.3.1 Alternative Qualifications

Products having less than a 2-year field service record will be acceptable if a certified record of satisfactory field operation for not less than 6000 hours, exclusive of the manufacturers' factory or laboratory tests, is furnished.

1.4.3.2 Material and Equipment Manufacturing Date

Products manufactured more than 3 years prior to date of delivery to site are not acceptable.

1.5 WARRANTY

Provide equipment items supported by service organizations that are reasonably convenient to the equipment installation in order to render satisfactory service to the equipment on a regular and emergency basis during the warranty period of the contract.

PART 2 PRODUCTS

2.1 MATERIALS AND EQUIPMENT

As a minimum, meet requirements of UL, where UL standards are established for those items, and requirements of NFPA 70 for all materials, equipment, and devices.

2.2 CONDUIT AND FITTINGS

Conform to the following:

2.2.1 Rigid Metallic Conduit

2.2.1.1 Rigid, Threaded Zinc-Coated Steel Conduit

ANSI C80.1, UL 6.

2.2.2 Rigid Nonmetallic Conduit

PVC Type EPC-40 in accordance with NEMA TC 2,UL 651.

2.2.3 Intermediate Metal Conduit (IMC)

UL 1242, zinc-coated steel only.

2.2.4 Electrical, Zinc-Coated Steel Metallic Tubing (EMT)

UL 797, ANSI C80.3.

2.2.5 Plastic-Coated Rigid Steel and IMC Conduit

NEMA RN 1, Type 40(40 mils thick).

2.2.6 Flexible Metal Conduit

UL 1.

2.2.6.1 Liquid-Tight Flexible Metal Conduit, Steel

UL 360.

2.2.7 Fittings for Metal Conduit, EMT, and Flexible Metal Conduit

UL 514B. Ferrous fittings: cadmium- or zinc-coated in accordance with UL 514B.

2.2.7.1 Fittings for Rigid Metal Conduit and IMC

Threaded-type. Split couplings unacceptable.

2.2.7.2 Fittings for EMT

Steelcompression type.

2.2.8 Fittings for Rigid Nonmetallic Conduit

NEMA TC 3 for PVC, and UL 514B.

2.3 CABLE TRAYS

NEMA VE 1. Provide the following:

a. Cable trays: form a wireway system, with a nominal 6 inch depth.

b. Cable trays: constructed of steel that has been zinc-coated after fabrication.

c. Cable trays: include splice and end plates, dropouts, and miscellaneous hardware.

d. Edges, fittings, and hardware: finished free from burrs and sharp edges.

e. Fittings: ensure not less than load-carrying ability of straight tray sections and have manufacturer's minimum standard radius.

f. Radius of bends 12 inches.2.3.1 Basket-Type Cable Trays

Provide of nominal 6, inch width and 2, inch depth with maximum wire mesh spacing of 2 by 4 inch.

2.4 OPEN TELECOMMUNICATIONS CABLE SUPPORT

2.4.1 Open Top Cable Supports

Open top cable supports are not allowed.

2.4.2 Closed Ring Cable Supports

Closed ring cable supports are not allowed.

2.5 OUTLET BOXES AND COVERS

UL 514A, cadmium- or zinc-coated, if ferrous metal. UL 514C, if nonmetallic.

2.5.1 Floor Outlet Boxes

Provide the following:

a. Boxes: adjustable and concrete tight.

b. Each outlet box: consisting of cast-metal body with threaded openings, or sheet-steel body with knockouts for conduits.

c. Telecommunications outlets: consisting of heavy duty 8P8C dual molded plugs, gang device plate. Number of outlet per floor box as indicated.

Outlet face plate must be perpendicular to floor and have cut out to fit typical four ports single gang device plate.

d. Receptacle outlets. Heavy duty duplex, two pole, three-wire grounding, 20A, 125 V, NEMA WD 6, Configuration 5-20R, unless otherwise indicated. Number of receptacle per floor box as indicated. Factory wired for field hardwiring with armored cable, containing three insulated No. 12 AWG solid copper conductors, terminated with pig tail. Receptacle face plate must be perpendicular with floor and have cut out to fit typical duplex gang device plate.

e. Provide gaskets where necessary to ensure watertight installation.

f. Provide boxes as required on the plans. Provide boxes to coordinate with furniture connection requirements. Provide blank conver plates for each floor box

2.5.2 Outlet Boxes for Telecommunications System

Provide the following:

a. Standard type 5 inches square by 2 7/8 inches deep.

b. Outlet boxes for wall-mounted telecommunications outlets: 5 inches square by 2 7/8 inches deep.

c. Depth of boxes: large enough to allow manufacturers' recommended conductor bend radii.

2.6 CABINETS, JUNCTION BOXES, AND PULL BOXES

Volume greater than 100 cubic inches, UL 50, hot-dip, zinc-coated, if sheet steel.

2.7 WIRES AND CABLES

Provide wires and cables in accordance applicable requirements of NFPA 70 and UL for type of insulation, jacket, and conductor specified or indicated. Do not use wires and cables manufactured more than 12 months prior to date of delivery to site.

2.7.1 Conductors

Provide the following:

a. Conductor sizes and capacities shown are based on copper, unless indicated otherwise.

b. Conductors No. 8 AWG and larger diameter: stranded.

c. Conductors No. 10 AWG and smaller diameter: solid.

d. Conductors for remote control, alarm, and signal circuits, classes 1, 2, and 3: stranded unless specifically indicated otherwise.

e. All conductors: copper.2.7.1.1 Minimum Conductor Sizes

Provide minimum conductor size in accordance with the following:

a. Branch circuits: No. 12 AWG.

b. Class 1 remote-control and signal circuits: No. 14 AWG.

c. Class 2 low-energy, remote-control and signal circuits: No. 16 AWG.

d. Class 3 low-energy, remote-control, alarm and signal circuits: No. 22 AWG.

2.7.2 Color Coding

Provide color coding for service, feeder, branch, control, and signaling circuit conductors.

2.7.2.1 Ground and Neutral Conductors

Provide color coding of ground and neutral conductors as follows:

a. Grounding conductors: Green.

b. Neutral conductors: White.

c. Exception, where neutrals of more than one system are installed in same raceway or box, other neutrals color coding: white with a different colored (not green) stripe for each.

2.7.2.2 Ungrounded Conductors

Provide color coding of ungrounded conductors in different voltage systems as follows:

a. 208/120 volt, three-phase

(1) Phase A - black

(2) Phase B - red

(3) Phase C - blue

b. 480/277 volt, three-phase

(1) Phase A - brown

(2) Phase B - orange

(3) Phase C - yellow

c. 120/240 volt, single phase: Black and red

2.7.3 Insulation

Unless specified or indicated otherwise or required by NFPA 70, provide power and lighting wires rated for 600-volts, Type THWN/THHN conforming to UL 83, except that grounding wire may be type TW conforming to UL 83; remote-control and signal circuits: Type TW or TF, conforming to UL 83. Where lighting fixtures require 90-degree Centigrade (C) conductors, provide only conductors with 90-degree C insulation or better.

2.7.4 Bonding Conductors

ASTM B1, solid bare copper wire for sizes No. 8 AWG and smaller diameter; ASTM B8, Class B, stranded bare copper wire for sizes No. 6 AWG and larger diameter.

2.7.4.1 Telecommunications Bonding Backbone (TBB)

Provide a copper conductor TBB in accordance with TIA-607 with No. 6 AWG minimum size, and sized at 2 kcmil per linear foot of conductor length up to a maximum size of 3/0 AWG.

2.7.4.2 Bonding Conductor for Telecommunications

Provide a copper conductor Bonding Conductor for Telecommunications between the telecommunications main grounding busbar (TMGB) and the electrical service ground in accordance with TIA-607. Size the bonding conductor for telecommunications the same as the TBB.

2.7.5 Service Entrance Cables

Underground Service Entrance (USE) Cables, UL 854.

2.8 SPLICES AND TERMINATION COMPONENTS

UL 486A-486B for wire connectors and UL 510 for insulating tapes. Connectors for No. 10 AWG and smaller diameter wires: insulated, pressure-type in accordance with UL 486A-486B or UL 486C (twist-on splicing connector). Provide solderless terminal lugs on stranded conductors.

2.9 DEVICE PLATES

Provide the following:

a. UL listed, one-piece device plates for outlets to suit the devices installed.

b. For metal outlet boxes, plates on unfinished walls: zinc-coated sheet steel or cast metal having round or beveled edges.

c. For nonmetallic boxes and fittings, other suitable plates may be provided.

d. Plates on finished walls: nylon or lexan, minimum 0.03 inch wall thickness and same color as receptacle or toggle switch with which they are mounted.

f. Screws: machine-type with countersunk heads in color to match finish of plate.

g. Sectional type device plates are not be permitted.

h. Plates installed in wet locations: gasketed and UL listed for "wet locations."

2.10 SWITCHES

2.10.1 Toggle Switches

NEMA WD 1, UL 20, single pole, three-way, totally enclosed with bodies of thermoplastic or thermoset plastic and mounting strap with grounding screw. Include the following:

a. Handles: white or ivory thermoplastic.

b. Wiring terminals: screw-type, side-wired.

c. Contacts: silver-cadmium and contact arm - one-piece copper alloy.

d. Switches: rated quiet-type ac only, 120/277 volts, with current rating and number of poles indicated.

2.10.2 Disconnect Switches

NEMA KS 1. Provide heavy duty-type switches where indicated, where switches are rated higher than 240 volts, and for double-throw switches. Utilize Class R fuseholders and fuses for fused switches, unless indicated otherwise. Provide horsepower rated for switches serving as the motor-disconnect means. Provide switches in NEMA rating enclosure as indicated per NEMA ICS 6.

2.11 FUSES

NEMA FU 1. Provide complete set of fuses for each fusible switch. Coordinate time-current characteristics curves of fuses serving motors or connected in series with circuit breakers for proper operation. Submit coordination data for approval. Provide fuses with a voltage rating not less than circuit voltage.

2.11.1 Fuseholders

Provide in accordance with UL 4248-1.

2.11.2 Cartridge Fuses, Current Limiting Type (Class R)

UL 198M, Class RK-5 time-delay type. Provide only Class R associated fuseholders in accordance with UL 4248-12.

2.12 RECEPTACLES

Provide the following:

a. UL 498, hard use (also designated heavy-duty), grounding-type.

b. Ratings and configurations: as indicated.

c. Bodies: white for P1481 and matching existing color for P1482 as per NEMA WD 1.

d. Face and body: thermoplastic supported on a metal mounting strap.

e. Dimensional requirements: per NEMA WD 6.

f. Screw-type, side-wired wiring terminals or of the solderless pressure type having suitable conductor-release arrangement.

g. Grounding pole connected to mounting strap.

h. The receptacle: containing triple-wipe power contacts and double or triple-wipe ground contacts.

2.12.1 Switched Duplex Receptacles

Provide separate terminals for each ungrounded pole. Top receptacle: switched when installed. Provide where indicated. Provide receptacle to coordinate with control requirements required by ASHRAE 90.1 - IP.

2.12.2 Weatherproof Receptacles

Provide receptacles, UL listed for use in "wet locations". Include cast metal box with gasketed, hinged, lockable and weatherproof while-in-use, polycarbonate, UV resistant/stabilized cover plate or matching existing installation.

2.12.3 Ground-Fault Circuit Interrupter Receptacles

UL 943, duplex type for mounting in standard outlet box. Provide device capable of detecting current leak of 6 milliamperes or greater and tripping per requirements of UL 943 for Class A ground-fault circuit interrupter devices. Provide screw-type, side-wired wiring terminals or pre-wired (pigtail) leads.

2.12.4 Dryer Receptacles

NEMA 14-30 configuration, rated 30 amperes, 125/250 volts. Furnish one matching plug with each receptacle.

2.13 PANELBOARDS

Provide panelboards in accordance with the following:

a. UL 67 and UL 50 having a short-circuit current rating as indicated.

b. Panelboards for use as service disconnecting means: additionally conform to UL 869A.

c. Panelboards: circuit breaker-equipped.

d. Designed such that individual breakers can be removed without disturbing adjacent units or without loosening or removing supplemental insulation supplied as means of obtaining clearances as required by UL.

e. "Specific breaker placement" is required in panelboards to match the breaker placement indicated in the panelboard schedule on the drawings.

f. Use of "Subfeed Breakers" is not acceptable unless specifically indicated otherwise.

g. Main breaker: "separately" mounted "above" or "below" branch breakers.

h. Where "space only" is indicated, make provisions for future installation of breakers.

i. Directories: indicate load served by each circuit in panelboard.

j. Directories: indicate source of service to panelboard (e.g., Panel PA served from Panel MDP).

k. Provide new directories for existing panels and switchboards modified by this project as indicated.

l. Type directories and mount in holder behind transparent protective covering.

m. Panelboard nameplates: provided in accordance with paragraph FIELD FABRICATED NAMEPLATES.

2.13.1 Enclosure

Provide panelboard enclosure in accordance with the following:

a. UL 50.

b. Cabinets mounted outdoors or flush-mounted: hot-dipped galvanized after fabrication.

c. Cabinets: painted in accordance with paragraph PAINTING.

d. Outdoor cabinets: NEMA 4X stainless with conduit hubs welded to the cabinet.

e. Front edges of cabinets: form-flanged or fitted with structural shapes welded or riveted to the sheet steel, for supporting the panelboard front.

f. All cabinets: fabricated such that no part of any surface on the finished cabinet deviates from a true plane by more than 1/8 inch.

g. Holes: provided in the back of indoor surface-mounted cabinets, with outside spacers and inside stiffeners, for mounting the cabinets with a 1/2 inch clear space between the back of the cabinet and the wall surface.

h. Flush doors: mounted on hinges that expose only the hinge roll to view when the door is closed.

i. Each door: fitted with a combined catch and lock, except that doors over 24 inches long provided with a three-point latch having a knob with a T-handle, and a cylinder lock.

j. Keys: two provided with each lock, with all locks keyed alike.

k. Finished-head cap screws: provided for mounting the panelboard fronts on the cabinets.

2.13.2 Panelboard Buses

Support bus bars on bases independent of circuit breakers. Design main buses and back pans so that breakers may be changed without machining, drilling, or tapping. Provide isolated neutral bus in each panel for connection of circuit neutral conductors. Provide separate ground bus identified as equipment grounding bus per UL 67 for connecting grounding conductors; bond to steel cabinet.

2.13.3 Circuit Breakers

UL 489, thermal magnetic-type having a minimum short-circuit current rating equal to the short-circuit current rating of the panelboard in which the circuit breaker will be mounted. Breaker terminals: UL listed as suitable for type of conductor provided. Series rated circuit breakers and plug-in circuit breakers are unacceptable.

2.13.3.1 Multipole Breakers

Provide common trip-type with single operating handle. Design breaker such that overload in one pole automatically causes all poles to open. Maintain phase sequence throughout each panel so that any three adjacent breaker poles are connected to Phases A, B, and C, respectively.

2.14 TRANSFORMERS

Provide transformers in accordance with the following:

a. NEMA ST 20, general purpose, dry-type, self-cooled, ventilated.

b. Provide transformers in NEMA 1 enclosure.

c. Transformer insulation system:

(1) 220 degrees C insulation system for transformers 15 kVA and greater, with temperature rise not exceeding 115 degrees C under full-rated load in maximum ambient of 40 degrees C.

d. Transformer of 115 degrees C temperature rise: capable of carrying continuously 115 percent of nameplate kVA without exceeding insulation rating.

e. Transformers: quiet type with maximum sound level at least 3 decibels less than NEMA standard level for transformer ratings indicated.

2.14.1 Specified Transformer Efficiency

Transformers, indicated and specified with: 480V primary, 80 degrees C or 115 degrees C temperature rise, kVA ratings of 37.5 to 100 for single phase or 30 to 500 for three phase, energy efficient type. Minimum efficiency, based on factory test results: not be less than NEMA Class 1 efficiency as defined by NEMA TP 1.

2.15 MOTORS

Provide motors in accordance with the following:

a. NEMA MG 1.

b. Hermetic-type sealed motor compressors: Also comply with UL 984.

c. Provide the size in terms of HP, or kVA, or full-load current, or a combination of these characteristics, and other characteristics, of each motor as indicated or specified.

d. Determine specific motor characteristics to ensure provision of correctly sized starters and overload heaters.

e. Rate motors for operation on 208-volt, 3-phase circuits with a terminal voltage rating of 200 volts, and those for operation on 480-volt, 3-phase circuits with a terminal voltage rating of 460 volts.

f. Use motors designed to operate at full capacity with voltage variation of plus or minus 10 percent of motor voltage rating.

g. Unless otherwise indicated, use continuous duty type motors if rated 1 HP and above.

h. Where fuse protection is specifically recommended by the equipment manufacturer, provide fused switches in lieu of non-fused switches indicated.

2.15.1 High Efficiency Single-Phase Motors

Single-phase fractional-horsepower alternating-current motors: high efficiency types corresponding to the applications listed in NEMA MG 11. In exception, for motor-driven equipment with a minimum seasonal or overall efficiency rating, such as a SEER rating, provide equipment with motor to meet the overall system rating indicated.

2.15.2 Premium Efficiency Polyphase Motors

Select polyphase motors based on high efficiency characteristics relative to typical characteristics and applications as listed in NEMA MG 10. In addition, continuous rated, polyphase squirrel-cage medium induction motors must meet the requirements for premium efficiency electric motors in accordance with NEMA MG 1, including the NEMA full load efficiency ratings. In exception, for motor-driven equipment with a minimum seasonal or overall efficiency rating, such as a SEER rating, provide equipment with motor to meet the overall system rating indicated.

2.15.3 Motor Sizes

Provide size for duty to be performed, not exceeding the full-load nameplate current rating when driven equipment is operated at specified capacity under most severe conditions likely to be encountered. When motor size provided differs from size indicated or specified, make adjustments to wiring, disconnect devices, and branch circuit protection to accommodate equipment actually provided. Provide controllers for motors rated 1-hp and above with electronic phase-voltage monitors designed to protect motors from phase-loss, undervoltage, and overvoltage. Provide protection for motors from immediate restart by a time adjustable restart relay.

2.15.4 Wiring and Conduit

Provide internal wiring for components of packaged equipment as an integral part of the equipment. Provide power wiring and conduit for field-installed equipment as specified herein. Power wiring and conduit: conform to the requirements specified herein. Control wiring: provided under, and conform to, the requirements of the section specifying the associated equipment.

2.16 MOTOR CONTROLLERS

Provide motor controllers in accordance with the following:

a. UL 508, NEMA ICS 1, and NEMA ICS 2.

b. Provide controllers with thermal overload protection in each phase, and one spare normally open auxiliary contact, and one spare normally closed auxiliary contact.

c. Provide controllers for motors rated 1-hp and above with electronic phase-voltage monitors designed to protect motors from phase-loss, undervoltage, and overvoltage.

d. Provide protection for motors from immediate restart by a time adjustable restart relay.

e. When used with pressure, float, or similar automatic-type or maintained-contact switch, provide a hand/off/automatic selector switch with the controller.

f. Connections to selector switch: wired such that only normal automatic regulatory control devices are bypassed when switch is in "hand" position.

g. Safety control devices, such as low and high pressure cutouts, high temperature cutouts, and motor overload protective devices: connected in motor control circuit in "hand" and "automatic" positions.

h. Control circuit connections to hand/off/automatic selector switch or to more than one automatic regulatory control device: made in accordance with indicated or manufacturer's approved wiring diagram.

i. Provide a disconnecting means, capable of being locked in the open position, for the motor that is located in sight from the motor location and the driven machinery location. As an alternative, provide a motor controller disconnect, capable of being locked in the open position, to serve as the disconnecting means for the motor if it is in sight from the motor location and the driven machinery location.

j. Overload protective devices: provide adequate protection to motor windings; be thermal inverse-time-limit type; and include manual reset-type pushbutton on outside of motor controller case.

m. Cover of combination motor controller and manual switch or circuit breaker: interlocked with operating handle of switch or circuit breaker so that cover cannot be opened unless handle of switch or circuit breaker is in "off" position.

2.16.1 Control Wiring

Provide control wiring in accordance with the following:

a. All control wire: stranded tinned copper switchboard wire with 600-volt flame-retardant insulation Type SIS meeting UL 44, or Type MTW meeting UL 1063, and passing the VW-1 flame tests included in those standards.

b. Hinge wire: Class K stranding.

c. Current transformer secondary leads: not smaller than No. 10 AWG.

d. Control wire minimum size: No. 14 AWG.

e. Power wiring for 480-volt circuits and below: the same type as control wiring with No. 12 AWG minimum size.

f. Provide wiring and terminal arrangement on the terminal blocks to permit the individual conductors of each external cable to be terminated on adjacent terminal points.

2.16.2 Control Circuit Terminal Blocks

Provide control circuit terminal blocks in accordance with the following:

a. NEMA ICS 4.

b. Control circuit terminal blocks for control wiring: molded or fabricated type with barriers, rated not less than 600 volts.

c. Provide terminals with removable binding, fillister or washer head screw type, or of the stud type with contact and locking nuts.

d. Terminals: not less than No. 10 in size with sufficient length and space for connecting at least two indented terminals for 10 AWG conductors to each terminal.

e. Terminal arrangement: subject to the approval of the Contracting Officer with not less than four (4) spare terminals or 10 percent, whichever is greater, provided on each block or group of blocks.

f. Modular, pull apart, terminal blocks are acceptable provided they are of the channel or rail-mounted type.

g. Submit data showing that any proposed alternate will accommodate the specified number of wires, are of adequate current-carrying capacity, and are constructed to assure positive contact between current-carrying parts.

2.16.2.1 Types of Terminal Blocks

a. Short-Circuiting Type: Short-circuiting type terminal blocks: furnished for all current transformer secondary leads with provision for shorting together all leads from each current transformer without first opening any circuit. Terminal blocks: comply with the requirements of paragraph CONTROL CIRCUIT TERMINAL BLOCKS above.

b. Load Type: Load terminal blocks rated not less than 600 volts and of adequate capacity: provided for the conductors for NEMA Size 3 and smaller motor controllers and for other power circuits, except those for feeder tap units. Provide terminals of either the stud type with contact nuts and locking nuts or of the removable screw type, having length and space for at least two indented terminals of the size required on the conductors to be terminated. For conductors rated more than 50 amperes, provide screws with hexagonal heads. Conducting parts between connected terminals must have adequate contact surface and cross-section to operate without overheating. Provide each connected terminal with the circuit designation or wire number placed on or near the terminal in permanent contrasting color.

2.16.3 Control Circuits

Control circuits: maximum voltage of 120 volts derived from control transformer in same enclosure. Transformers: conform to UL 506, as applicable. Transformers, other than transformers in bridge circuits: provide primaries wound for voltage available and secondaries wound for correct control circuit voltage. Size transformers so that 80 percent of rated capacity equals connected load. Provide disconnect switch on primary side. Provide fuses in each ungrounded primary feeder. Provide one fused secondary lead with the other lead grounded.

2.16.4 Enclosures for Motor Controllers

NEMA ICS 6.

2.16.5 Multiple-Speed Motor Controllers and Reversible Motor Controllers

Across-the-line-type, electrically and mechanically interlocked. Multiple-speed controllers: include compelling relays and multiple-button, station-type with pilot lights for each speed.

2.16.6 Pushbutton Stations

Provide with "start/stop" momentary contacts having one normally open and one normally closed set of contacts, and red lights to indicate when motor is running. Stations: heavy duty, oil-tight design.

2.16.7 Pilot and Indicating Lights

Provide LED cluster lamps.

2.17 MANUAL MOTOR STARTERS (MOTOR RATED SWITCHES)

Three pole designed for flush mounting with overload protection and pilot lights.

2.17.1 Pilot Lights

Provide yoke-mounted, seven element LED cluster light module. Color: in accordance with NEMA ICS 2.2.18 LOCKOUT REQUIREMENTS

Provide disconnecting means capable of being locked out for machines and other equipment to prevent unexpected startup or release of stored energy in accordance with 29 CFR 1910.147. Comply with requirements of Division 23, "Mechanical" for mechanical isolation of machines and other equipment.

2.19 TELECOMMUNICATIONS SYSTEM

Provide system of telecommunications wire-supporting structures (pathway), including: outlet boxes, conduits with pull wires cable trays, and other accessories for telecommunications outlets and pathway in accordance with TIA-569 and as specified herein. Additional telecommunications requirements are specified in Section 27 10 00, BUILDING TELECOMMUNICATIONS CABLING SYSTEM.

2.20 GROUNDING AND BONDING EQUIPMENT

2.20.1 Ground Rods

UL 467. Ground rods: copper-clad steel, with minimum diameter of 3/4

inch and minimum length 10 feet. Sectional ground rods are permitted.

2.20.2 Telecommunications Grounding Busbar

Provide corrosion-resistant grounding busbar suitable for indoor installation in accordance with TIA-607. Busbars: plated for reduced contact resistance. Provide a telecommunications main grounding busbar (TMGB) in the telecommunications entrance facility and a (TGB) in all other telecommunications rooms and equipment rooms. The telecommunications main grounding busbar (TMGB) and the telecommunications grounding busbar (TGB): sized in accordance with the immediate application requirements and with consideration of future growth. Provide telecommunications grounding busbars with the following:

a. Predrilled copper busbar provided with holes for use with standard sized lugs,

b. Minimum dimensions of 0.25 in thick by 4 in wide for the TMGB and 2 in wide for TGBs with length as indicated;

c. Listed by a nationally recognized testing laboratory.

2.21 MANUFACTURER'S NAMEPLATE

Provide on each item of equipment a nameplate bearing the manufacturer's name, address, model number, and serial number securely affixed in a conspicuous place; the nameplate of the distributing agent will not be acceptable.

2.22 FIELD FABRICATED NAMEPLATES

Provide field fabricated nameplates in accordance with the following:

a. ASTM D709.

b. Provide laminated plastic nameplates for each equipment enclosure, relay, switch, and device; as specified or as indicated on the drawings.

c. Each nameplate inscription: identify the function and, when applicable, the position.

d. Nameplates: melamine plastic, 0.125 inch thick, white with black center core.

e. Surface: matte finish. Corners: square. Accurately align lettering and engrave into the core.

f. Minimum size of nameplates: one by 2.5 inches.

g. Lettering size and style: a minimum of 0.25 inch high normal block style.

2.23 WARNING SIGNS

Provide warning signs for flash protection in accordance with NFPA 70E and NEMA Z535.4 for switchboards, panelboards, and industrial control panels that are in other than dwelling occupancies and are likely to require examination, adjustment, servicing, or maintenance while energized.

Provide field installed signs to warn qualified persons of potential electric arc flash hazards when warning signs are not provided by the manufacturer. Provide marking that is clearly visible to qualified persons before examination, adjustment, servicing, or maintenance of the equipment.

2.24 FIRESTOPPING MATERIALS

Provide firestopping around electrical penetrations in accordance with Section 07 84 00, FIRESTOPPING.

2.25 SURGE PROTECTIVE DEVICES

Provide parallel type surge protective devices (SPD) which comply with UL 1449 at the service entrance and panelboards . Provide surge protectors in a NEMA 1 enclosure per NEMA ICS 6. Use Type 1 or Type 2 SPD and connect on the load side of a dedicated circuit breaker.

Provide the following modes of protection:

FOR SINGLE PHASE AND THREE PHASE WYE CONNECTED SYSTEMS-
Phase to phase (L-L)
Each phase to neutral (L-N)
Neutral to ground (N-G)
Phase to ground (L-G)

SPDs at the service entrance: provide with a minimum surge current rating of 80,000 amperes for L-L mode minimum and 40,000 amperes for other modes (L-N, L-G, and N-G) and downstream SPDs rated 40,000 amperes for L-L mode minimum and 20,000 amperes for other modes (L-N, L-G, and N-G).

Provide SPDs. Maximum L-N, L-G, and N-G Voltage Protection Rating:

700V for 208Y/120V, three phase system
1,200V for 480Y/277V, three phase system

Maximum L-L Voltage Protection Rating:

1,200V for 208Y/120V, three phase system
2,000V for 480Y/277V, three phase system

The minimum MCOV (Maximum Continuous Operating Voltage) rating for L-N and L-G modes of operation: 120% of nominal voltage for 240 volts and below; 115% of nominal voltage above 240 volts to 480 volts.

2.26 FACTORY APPLIED FINISH

Provide factory-applied finish on electrical equipment in accordance with the following:

a. NEMA 250 corrosion-resistance test and the additional requirements as specified herein.

b. Interior and exterior steel surfaces of equipment enclosures: thoroughly cleaned followed by a rust-inhibitive phosphatizing or equivalent treatment prior to painting.

c. Exterior surfaces: free from holes, seams, dents, weld marks, loose scale or other imperfections.

d. Interior surfaces: receive not less than one coat of corrosion-resisting paint in accordance with the manufacturer's standard practice.

e. Exterior surfaces: primed, filled where necessary, and given not less than two coats baked enamel with semigloss finish.

f. Equipment located indoors: ANSI Light Gray,.

g. Provide manufacturer's coatings for touch-up work and as specified in paragraph FIELD APPLIED PAINTING.

2.27 SOURCE QUALITY CONTROL

2.27.1 Transformer Factory Tests

Submittal: include routine NEMA ST 20 transformer test results on each transformer and also provide the results of NEMA "design" and "prototype" tests that were made on transformers electrically and mechanically equal to those specified.

PART 3 EXECUTION

3.1 INSTALLATION

Electrical installations, including weatherproof and hazardous locations and ducts, plenums and other air-handling spaces: conform to requirements of NFPA 70 and IEEE C2 and to requirements specified herein.

3.1.1 Underground Service

Underground service conductors and associated conduit: continuous from service entrance equipment to outdoor power system connection.

3.1.2 Service Entrance Identification

Service entrance disconnect devices, switches, and enclosures: labeled and identified as such.

3.1.2.1 Labels

Wherever work results in service entrance disconnect devices in more than one enclosure, as permitted by NFPA 70, label each enclosure, new and existing, as one of several enclosures containing service entrance disconnect devices. Label, at minimum: indicate number of service disconnect devices housed by enclosure and indicate total number of enclosures that contain service disconnect devices. Provide laminated plastic labels conforming to paragraph FIELD FABRICATED NAMEPLATES. Use lettering of at least 0.25 inch in height, and engrave on black-on-white matte finish. Service entrance disconnect devices in more than one enclosure: provided only as permitted by NFPA 70.

3.1.3 Wiring Methods

Provide insulated conductors installed in rigid steel conduit, IMC, rigid nonmetallic conduit, or EMT, except where specifically indicated or specified otherwise or required by NFPA 70 to be installed otherwise. Grounding conductor: separate from electrical system neutral conductor.

Provide insulated green equipment grounding conductor for circuit(s) installed in conduit and raceways. Minimum conduit size: 1/2 inch in diameter for low voltage lighting and power circuits. Vertical distribution in multiple story buildings: made with metal conduit in fire-rated shafts, with metal conduit extending through shafts for minimum distance of 6 inches. Firestop conduit which penetrates fire-rated walls, fire-rated partitions, or fire-rated floors in accordance with Section 07 84 00, FIRESTOPPING.

3.1.3.1 Pull Wire

Install pull wires in empty conduits. Pull wire: plastic having minimum 200-pound force tensile strength. Leave minimum 36 inches of slack at each end of pull wire.

3.1.4 Conduit Installation

Unless indicated otherwise, conceal conduit under floor slabs and within finished walls, ceilings, and floors. Keep conduit minimum 6 inches away from parallel runs of flues and steam or hot water pipes. Install conduit parallel with or at right angles to ceilings, walls, and structural members where located above accessible ceilings and where conduit will be visible after completion of project. Run conduits under floor slab as if exposed.

3.1.4.1 Restrictions Applicable to EMT

a. Do not install underground.

b. Do not encase in concrete, mortar, grout, or other cementitious materials.

c. Do not use in areas subject to severe physical damage including but not limited to equipment rooms where moving or replacing equipment could physically damage the EMT.

d. Do not use outdoors.

3.1.4.2 Restrictions Applicable to Nonmetallic Conduit

a. PVC Schedule 40 and PVC Schedule 80

(1) Do not use in areas where subject to severe physical damage, including but not limited to, mechanical equipment rooms, electrical equipment rooms and other such areas.

(2) Do not use in penetrating fire-rated walls or partitions, or fire-rated floors.

(3) Do not use above grade, except where allowed in this section for rising through floor slab or indicated otherwise.

3.1.4.3 Restrictions Applicable to Flexible Conduit

Use only as specified in paragraph FLEXIBLE CONNECTIONS.

3.1.4.4 Underground Conduit

Plastic-coated rigid steel; plastic-coated steel IMC; PVC, Type EPC-40

Plastic coating: extend minimum 6 inches above floor.

3.1.4.5 Conduit Installed Under Floor Slabs

Conduit run under floor slab: located a minimum of 12 inches below the vapor barrier. Seal around conduits at penetrations thru vapor barrier.

3.1.4.6 Conduit Through Floor Slabs

Where conduits rise through floor slabs, do not allow curved portion of bends to be visible above finished slab.

3.1.4.7 Stub-Ups

Provide conduits stubbed up through concrete floor for connection to free-standing equipment with adjustable top or coupling threaded inside for plugs, set flush with finished floor. Extend conductors to equipment in rigid steel conduit, except that flexible metal conduit may be used 6 inches above floor. Where no equipment connections are made, install screwdriver-operated threaded flush plugs in conduit end.

3.1.4.8 Conduit Support

Support conduit by pipe straps, wall brackets, threaded rod conduit hangers, or ceiling trapeze. Fasten by wood screws to wood; by toggle bolts on hollow masonry units; by concrete inserts or expansion bolts on concrete or brick; and by machine screws, welded threaded studs, or spring-tension clamps on steel work. Threaded C-clamps may be used on rigid steel conduit only. Do not weld conduits or pipe straps to steel structures. Do not exceed one-fourth proof test load for load applied to fasteners. Provide vibration resistant and shock-resistant fasteners attached to concrete ceiling. Do not cut main reinforcing bars for any holes cut to depth of more than 1 1/2 inches in reinforced concrete beams or to depth of more than 3/4 inch in concrete joints. Fill unused holes. In partitions of light steel construction, use sheet metal screws. In suspended-ceiling construction, run conduit above ceiling. Do not support conduit by ceiling support system. Conduit and box systems: supported independently of both (a) tie wires supporting ceiling grid system, and (b) ceiling grid system into which ceiling panels are placed. Do not share supporting means between electrical raceways and mechanical piping or ducts. Coordinate installation with above-ceiling mechanical systems to assure maximum accessibility to all systems. Spring-steel fasteners may be used for lighting branch circuit conduit supports in suspended ceilings in dry locations. Where conduit crosses building expansion joints, provide suitable expansion fitting that maintains conduit electrical continuity by bonding jumpers or other means. For conduits greater than 2 1/2 inches inside diameter, provide supports to resist forces of 0.5 times the equipment weight in any direction and 1.5 times the equipment weight in the downward direction.

3.1.4.9 Directional Changes in Conduit Runs

Make changes in direction of runs with symmetrical bends or cast-metal fittings. Make field-made bends and offsets with hickey or conduit-bending machine. Do not install crushed or deformed conduits. Avoid trapped conduits. Prevent plaster, dirt, or trash from lodging in conduits, boxes, fittings, and equipment during construction. Free clogged conduits of obstructions.

3.1.4.10 Locknuts and Bushings

Fasten conduits to sheet metal boxes and cabinets with two locknuts where required by NFPA 70, where insulated bushings are used, and where bushings cannot be brought into firm contact with the box; otherwise, use at least minimum single locknut and bushing. Provide locknuts with sharp edges for digging into wall of metal enclosures. Install bushings on ends of conduits, and provide insulating type where required by NFPA 70.

3.1.4.11 Flexible Connections

Provide flexible steel conduit between 3 and 6 feet in length for recessed and semirecessed lighting fixtures; for equipment subject to vibration, noise transmission, or movement; and for motors. Install flexible conduit to allow 20 percent slack. Minimum flexible steel conduit size: 1/2 inch diameter. Provide liquidtight flexible conduit in wet and damp locations and in fire pump rooms for equipment subject to vibration, noise transmission, movement or motors. Provide separate ground conductor across flexible connections.

3.1.4.12 Telecommunications and Signal System Pathway

Install telecommunications pathway in accordance with TIA-569.

a. Horizontal Pathway: Telecommunications pathways from the work area to the telecommunications room: installed and cabling length requirements in accordance with TIA-568-C.1. Size conduits, and cable trays in accordance with TIA-569 and as indicated.

b. Backbone Pathway: Telecommunication pathways from the telecommunications entrance facility to telecommunications rooms, and, telecommunications equipment rooms (backbone cabling): installed in accordance with TIA-569. Size conduits, and cable trays for telecommunications risers in accordance with TIA-569 and as indicated.

3.1.5 Cable Tray Installation

Install cable trays parallel with or at right angles to ceilings, walls, and structural members. Support at maximum 6 foot intervals. Ensure edges, fittings, and hardware are finished free from burrs and sharp edges. Provide No. 2 AWG bare copper wire throughout cable tray system, and bond to each section. Use No. 1/0 aluminum wire if cable tray is aluminum. Install conductors that run though smoke and fire partitions in 4 inch rigid steel conduits with grounding bushing, extending 12 inches beyond each side of partitions. Seal conduit on both ends to maintain smoke and fire ratings of partitions. Provide supports to resist forces of 0.5 times the equipment weight in any direction and 1.5 times the equipment weight in the downward direction.

3.1.6 Boxes, Outlets, and Supports

Provide boxes in wiring and raceway systems wherever required for pulling of wires, making connections, and mounting of devices or fixtures. Boxes for metallic raceways: cast-metal, hub-type when located in wet locations, when surface mounted on outside of exterior surfaces, when surface mounted on interior walls exposed up to 7 feet above floors and walkways, and when specifically indicated. Boxes in other locations: sheet steel, except that nonmetallic boxes may be used with nonmetallic conduit system. Provide each box with volume required by NFPA 70 for

number of conductors enclosed in box. Boxes for mounting lighting fixtures: minimum 4 inches square, or octagonal, except that smaller boxes may be installed as required by fixture configurations, as approved. Boxes for use in masonry-block or tile walls: square-cornered, tile-type, or standard boxes having square-cornered, tile-type covers. Provide gaskets for cast-metal boxes installed in wet locations and boxes installed flush with outside of exterior surfaces. Provide separate boxes for flush or recessed fixtures when required by fixture terminal operating temperature; provide readily removable fixturesfor access to boxes unless ceiling access panels are provided. Support boxes and pendants for surface-mounted fixtures on suspended ceilings independently of ceiling supports. Fasten boxes and supports with wood screws on wood, with bolts and expansion shields on concrete or brick, with toggle bolts on hollow masonry units, and with machine screws or welded studs on steel. In open overhead spaces, cast boxes threaded to raceways need not be separately supported except where used for fixture support; support sheet metal boxes directly from building structure or by bar hangers. Where bar hangers are used, attach bar to raceways on opposite sides of box, and support raceway with approved-type fastener maximum 24 inches from box. When penetrating reinforced concrete members, avoid cutting reinforcing steel.

3.1.6.1 Boxes

Boxes for use with raceway systems: minimum 1 1/2 inches deep, except where shallower boxes required by structural conditions are approved. Boxes for other than lighting fixture outlets: minimum 4 inches square, except that 4 by 2 inch boxes may be used where only one raceway enters outlet. Telecommunications outlets: a minimum of 5 inches square by 2 1/8 inches deep. Mount outlet boxes flush in finished walls.

3.1.6.2 Pull Boxes

Construct of at least minimum size required by NFPA 70 of code-gauge aluminum or galvanized sheet steel, except where cast-metal boxes are required in locations specified herein. Provide boxes with screw-fastened covers. Where several feeders pass through common pull box, tag feeders to indicate clearly electrical characteristics, circuit number, and panel designation.

3.1.6.3 Extension Rings

Extension rings are not permitted for new construction.

3.1.7 Mounting Heights

Mount panelboards, circuit breakers, and disconnecting switches so height of operating handle at its highest position is maximum 78 inches above floor. Mount lighting switches 48 inches above finished floor. Mount receptacles and telecommunications outlets 18 inches above finished floor, unless otherwise indicated. Mount other devices as indicated. Measure mounting heights of wiring devices and outletsto center of device or outlet.

3.1.8 Conductor Identification

Provide conductor identification within each enclosure where tap, splice, or termination is made. For conductors No. 6 AWG and smaller diameter, provide color coding by factory-applied, color-impregnated insulation. For conductors No. 4 AWG and larger diameter, provide color coding by

plastic-coated, self-sticking markers; colored nylon cable ties and plates; or heat shrink-type sleeves. Identify control circuit terminations in accordance with manufacturer's recommendations. Provide telecommunications system conductor identification as specified in Section 27 10 00 BUILDING TELECOMMUNICATIONS CABLING SYSTEMS.

3.1.8.1 Marking Strips

Provide marking strips in accordance with the following:

a. Provide white or other light-colored plastic marking strips, fastened by screws to each terminal block, for wire designations.

b. Use permanent ink for the wire numbers

c. Provide reversible marking strips to permit marking both sides, or provide two marking strips with each block.

d. Size marking strips to accommodate the two sets of wire numbers.

e. Assign a device designation in accordance with NEMA ICS 1 to each device to which a connection is made. Mark each device terminal to which a connection is made with a distinct terminal marking corresponding to the wire designation used on the Contractor's schematic and connection diagrams.

f. The wire (terminal point) designations used on the Contractor's wiring diagrams and printed on terminal block marking strips may be according to the Contractor's standard practice; however, provide additional wire and cable designations for identification of remote (external) circuits for the Government's wire designations.

g. Prints of the marking strips drawings submitted for approval will be so marked and returned to the Contractor for addition of the designations to the terminal strips and tracings, along with any rearrangement of points required.

3.1.9 Splices

Make splices in accessible locations. Make splices in conductors No. 10 AWG and smaller diameter with insulated, pressure-type connector. Make splices in conductors No. 8 AWG and larger diameter with solderless connector, and cover with insulation material equivalent to conductor insulation.

3.1.10 Covers and Device Plates

Install with edges in continuous contact with finished wall surfaces without use of mats or similar devices. Plaster fillings are not permitted. Install plates with alignment tolerance of 1/16 inch. Use of sectional-type device plates are not permitted. Provide gasket for plates installed in wet locations.

3.1.11 Electrical Penetrations

Seal openings around electrical penetrations through fire resistance-rated walls, partitions, floors, or ceilings in accordance with Section 07 84 00 FIRESTOPPING.

3.1.12 Grounding and Bonding

Provide in accordance with NFPA 70 and NFPA 780. Ground exposed, non-current-carrying metallic parts of electrical equipment, metallic raceway systems, grounding conductor in metallic and nonmetallic raceways, telecommunications system grounds, and neutral conductor of wiring systems.

Make ground connection at main service equipment, and extend grounding conductor to point of entrance of metallic water service. Make connection to water pipe by suitable ground clamp or lug connection to plugged tee. If flanged pipes are encountered, make connection with lug bolted to street side of flanged connection. Supplement metallic water service grounding system with additional made electrode in compliance with NFPA 70.

Make ground connection to driven ground rods on exterior of building. In addition to the requirements specified herein, provide telecommunications grounding in accordance with TIA-607. Where ground fault protection is employed, ensure that connection of ground and neutral does not interfere with correct operation of fault protection.

3.1.12.1 Ground Rods

Provide cone pointed ground rods. Measure the resistance to ground using the fall-of-potential method described in IEEE 81. Do not exceed 25 ohms under normally dry conditions for the maximum resistance of a driven ground. If this resistance cannot be obtained with a single rod, additional rods, spaced on center, not less than twice the distance of the length of the rod,. If the resultant resistance exceeds 25 ohms measured not less than 48 hours after rainfall, notify the Contracting Officer who will decide on the number of ground rods to add.

3.1.12.2 Grounding Connections

Make grounding connections which are buried or otherwise normally inaccessible, by exothermic weld or compression connector.

a. Make exothermic welds strictly in accordance with the weld manufacturer's written recommendations. Welds which are "puffed up" or which show convex surfaces indicating improper cleaning are not acceptable. Mechanical connectors are not required at exothermic welds.

b. Make compression connections using a hydraulic compression tool to provide the correct circumferential pressure. Provide tools and dies as recommended by the manufacturer. Use an embossing die code or other standard method to provide visible indication that a connector has been adequately compressed on the ground wire.

3.1.12.3 Ground Bus

Provide a copper ground bus in the electrical equipment rooms as indicated. Noncurrent-carrying metal parts of electrical equipment: effectively grounded by bonding to the ground bus. Bond the ground bus to both the entrance ground, and to a ground rod or rods as specified above having the upper ends terminating approximately 4 inches above the floor. Make connections and splices of the brazed, welded, bolted, or pressure-connector type, except use pressure connectors or bolted connections for connections to removable equipment.

3.1.12.4 Resistance

Maximum resistance-to-ground of grounding system: do not exceed 5 ohms under dry conditions. Where resistance obtained exceeds 5 ohms, contact Contracting Officer for further instructions.

3.1.12.5 Telecommunications System

Provide telecommunications grounding in accordance with the following:

a. Telecommunications Grounding Busbars: Provide a telecommunications main grounding busbar (TMGB) in the telecommunications entrance facility. Install the TMGB as close to the electrical service entrance grounding connection as practicable. Provide a telecommunications grounding busbar (TGB) in all other telecommunications rooms and telecommunications equipment rooms. Install the TGB as close to the telecommunications room panelboard as practicable, when equipped. Where a panelboard for telecommunications equipment is not installed in the telecommunications room, locate the TGB near the backbone cabling and associated terminations. In addition, locate the TGB to provide for the shortest and straightest routing of the grounding conductors. Where a panelboard for telecommunications equipment is located within the same room or space as a TGB, bond that panelboard’s alternating current equipment ground (ACEG) bus (when equipped) or the panelboard enclosure to the TGB. Install telecommunications grounding busbars to maintain clearances as required by NFPA 70 and insulated from its support. A minimum of 2 inches separation from the wall is recommended to allow access to the rear of the busbar and adjust the mounting height to accommodate overhead or underfloor cable routing.

b. Telecommunications Bonding Conductors: Provide main telecommunications service equipment ground consisting of separate bonding conductor for telecommunications, between the TMGB and readily accessible grounding connection of the electrical service. Grounding and bonding conductors should not be placed in ferrous metallic conduit. If it is necessary to place grounding and bonding conductors in ferrous metallic conduit that exceeds3 feet in length, bond the conductors to each end of the conduit using a grounding bushing or a No. 6 AWG conductor, minimum. Provide a telecommunications bonding backbone (TBB) that originates at the TMGB extends throughout the building using the telecommunications backbone pathways, and connects to the TGBs in all telecommunications rooms and equipment rooms. Install the TBB conductors such that they are protected from physical and mechanical damage. The TBB conductors should be installed without splices and routed in the shortest possible straight-line path. Make the bonding conductor between a TBB and a TGB continuous. Where splices are necessary, the number of splices should be a minimum. Make the splices accessible and located in telecommunications spaces. Connect joined segments of a TBB using exothermic welding, irreversible compression-type connectors, or equivalent. Install all joints to be adequately supported and protected from damage. Whenever two or more TBBs are used within a multistory building, bond the TBBs together with a grounding equalizer (GE) at the top floor and at a minimum of every third floor in between. Do not connect the TBB and GE to the pathway ground, except at the TMGB or the TGB.

c. Telecommunications Grounding Connections: Telecommunications grounding connections to the TMGB or TGB: utilize listed compression two-hole lugs, exothermic welding, suitable and equivalent one hole non-twisting lugs, or other irreversible compression type

connections. Bond all metallic pathways, cabinets, and racks for telecommunications cabling and interconnecting hardware located within the same room or space as the TMGB or TGB to the TMGB or TGB respectively. In a metal frame (structural steel) building, where the steel framework is readily accessible within the room; bond each TMGB and TGB to the vertical steel metal frame using a minimum No. 6 AWG conductor. Where the metal frame is external to the room and readily accessible, bond the metal frame to the TGB or TMGB with a minimum No. 6 AWG conductor. When practicable because of shorter distances and, where horizontal steel members are permanently electrically bonded to vertical column members, the TGB may be bonded to these horizontal members in lieu of the vertical column members. All connectors used for bonding to the metal frame of a building must be listed for the intended purpose.

3.1.13 Equipment Connections

Provide power wiring for the connection of motors and control equipment under this section of the specification. Except as otherwise specifically noted or specified, automatic control wiring, control devices, and protective devices within the control circuitry are not included in this section of the specifications and are provided under the section specifying the associated equipment.

3.1.14 Government-Furnished Equipment

Contractor rough-in for Government-furnished equipment to make equipment operate as intended, including providing miscellaneous items such as plugs, receptacles, wire, cable, conduit, flexible conduit, and outlet boxes or fittings.

3.1.15 Repair of Existing Work

Perform repair of existing work and modification of existing electrical distribution systems as follows:

3.1.15.1 Workmanship

Lay out work in advance. Exercise care where cutting, channeling, chasing, or drilling of floors, walls, partitions, ceilings, or other surfaces is necessary for proper installation, support, or anchorage of conduit, raceways, or other electrical work. Repair damage to buildings, piping, and equipment using skilled craftsmen of trades involved.

3.1.15.2 Continuation of Service

Maintain continuity of existing circuits of equipment to remain. Maintain existing circuits of equipment energized. Restore circuits wiring and power which are to remain but were disturbed during demolition back to original condition.

3.1.16 Surge Protective Devices

Connect the surge protective devices in parallel to the power source, keeping the conductors as short and straight as practically possible. Maximum allowed lead length is 3 feet.

3.2 FIELD FABRICATED NAMEPLATE MOUNTING

Provide number, location, and letter designation of nameplates as indicated. Fasten nameplates to the device with a minimum of two sheet-metal screws or two rivets.

3.3 WARNING SIGN MOUNTING

Provide the number of signs required to be readable from each accessible side. Space the signs in accordance with NFPA 70E.

3.4 FIELD APPLIED PAINTING

Paint electrical equipment as required to match finish of adjacent surfaces or to meet the indicated or specified safety criteria.

3.5 FIELD QUALITY CONTROL

Furnish test equipment and personnel and submit written copies of test results. Give Contracting Officer 5 working days notice prior to each test.

3.5.1 Devices Subject to Manual Operation

Operate each device subject to manual operation at least five times, demonstrating satisfactory operation each time.

3.5.2 600-Volt Wiring Test

Test wiring rated 600 volt and less to verify that no short circuits or accidental grounds exist. Perform insulation resistance tests on wiring No. 6 AWG and larger diameter using instrument which applies voltage of approximately 500 volts to provide direct reading of resistance. Minimum resistance: 250,000 ohms.

3.5.3 Transformer Tests

Perform the standard, not optional, tests in accordance with the Inspection and Test Procedures for transformers, dry type, air-cooled, 600 volt and below; as specified in NETA ATS. Measure primary and secondary voltages for proper tap settings. Tests need not be performed by a recognized independent testing firm or independent electrical consulting firm.

3.5.4 Ground-Fault Receptacle Test

Test ground-fault receptacles with a "load" (such as a plug in light) to verify that the "line" and "load" leads are not reversed.

3.5.5 Grounding System Test

Test grounding system to ensure continuity, and that resistance to ground is not excessive. Test each ground rod for resistance to ground before making connections to rod; tie grounding system together and test for resistance to ground. Make resistance measurements in dry weather, not earlier than 48 hours after rainfall. Submit written results of each test to Contracting Officer, and indicate location of rods as well as resistance and soil conditions at time measurements were made.

-- End of Section --

THIS PAGE HAS BEEN INTENTIONALLY LEFT BLANK

SECTION 26 27 14.00 20

ELECTRICITY METERING
02/11

PART 1 GENERAL

1.1 REFERENCES

The publications listed below form a part of this specification to the extent referenced. The publications are referred to within the text by the basic designation only.

INSTITUTE OF ELECTRICAL AND ELECTRONICS ENGINEERS (IEEE)

IEEE C2	(2012; Errata 1 2012; INT 1-4 2012; Errata 2 2013; INT 5-7 2013; INT 8-10 2014; INT 11 2015; INT 12 2016) National Electrical Safety Code
IEEE C37.90.1	(2013) Standard for Surge Withstand Capability (SWC) Tests for Relays and Relay Systems Associated with Electric Power Apparatus
IEEE C57.13	(2008; INT 2009) Standard Requirements for Instrument Transformers
IEEE Stds Dictionary	(2009) IEEE Standards Dictionary: Glossary of Terms & Definitions

INTERNATIONAL ELECTRICAL TESTING ASSOCIATION (NETA)

NETA ATS	(2013) Standard for Acceptance Testing Specifications for Electrical Power Equipment and Systems

NATIONAL ELECTRICAL MANUFACTURERS ASSOCIATION (NEMA)

ANSI C12.1	((2014; Errata 2016) Electric Meters - Code for Electricity Metering
ANSI C12.18	(2006) Protocol Specification for ANSI Type 2 Optical Port
ANSI C12.20	(2015; E 2018) Electricity Meters - 0.1, 0.2, and 0.5 Accuracy Classes
ANSI C12.7	(2014) Requirements for Watthour Meter Sockets
NEMA C12.19	(2012) Utility Industry End Device Data Tables

NATIONAL FIRE PROTECTION ASSOCIATION (NFPA)

NFPA 70	(2014; AMD 1 2013; Errata 1 2013; AMD 2 2013; Errata 2 2013; AMD 3 2014; Errata

3-4 2014; AMD 4-6 2014) National Electrical Code

1.2 DEFINITIONS

Unless otherwise specified or indicated, electrical and electronics terms used in these specifications, and on the drawings, shall be as defined in IEEE Stds Dictionary.

1.3 SUBMITTALS

Government approval is required for submittals with a "G" designation; submittals not having a "G" designation are for Contractor Quality Control approval.

Submittals with an "S" are for inclusion in the Sustainability eNotebook, in conformance to Section 01 33 29 SUSTAINABILITY REPORTING. Submit the following in accordance with Section 01 33 00 SUBMITTAL PROCEDURES:

SD-02 Shop Drawings

Installation Drawings; G

SD-03 Product Data

Electricity meters; G

Current transformer; G

External communications devices; G

SD-06 Test Reports

Acceptance checks and tests; G

System functional verification; G

Meter configuration template; G

Contractor shall fill in the meter configuration template and submit to the Activity for concurrence.

Meter configuration report; G

The meter configuration report shall be submitted as a Technical Data Package.

SD-10 Operation and Maintenance Data

Electricity Meters and Accessories, Data Package 5; G

Submit operation and maintenance data in accordance with Section 01 78 23 OPERATION AND MAINTENANCE DATA and as specified herein.

SD-11 Closeout Submittals

System functional verification; G

1.4 QUALITY ASSURANCE

1.4.1 Installation Drawings

Drawings shall be provided in hard-copy and pdf electronic format, and shall include but not be limited to the following:

a. Wiring diagrams with terminals identified of advanced meter, current transformers, protocol modules, communications interfaces, Ethernet connections, telephone lines.

b. One-line diagram, including meters, switch(es), current transformers, protocol modules, communications interfaces, Ethernet connections, telephone outlets, and fuses.

1.4.2 Standard Products

Provide materials and equipment that are products of manufacturers regularly engaged in the production of such products which are of equal material, design and workmanship. Products shall have been in satisfactory commercial or industrial use for 1 year prior to bid opening. The 1-year period shall include applications of equipment and materials under similar circumstances and of similar size. The product, or an earlier release of the product, shall have been on sale on the commercial market through advertisements, manufacturers catalogs, or brochures during the prior 1-year period. Where two or more items of the same class of equipment are required, these items shall be products of a single manufacturer; however, the component parts of the item need not be the products of the same manufacturer unless stated in this section.

1.4.3 Material and Equipment Manufacturing Data

Products manufactured more than 1 year prior to date of delivery to site shall not be used, unless specified otherwise.

1.5 MAINTENANCE

1.5.1 Additions to Operation and Maintenance Data

In addition to requirements of Data Package 5, include the following on the actual electricity meters and accessories provided:

a. A condensed description of how the system operates

b. Block diagram indicating major assemblies

c. Troubleshooting information

d. Preventive maintenance

e. Prices for spare parts and supply list

1.6 WARRANTY

The equipment items and software shall be supported by service organizations which are reasonably convenient to the equipment installation in order to render satisfactory service to the equipment and software on a regular and emergency basis during the warranty period of the contract.

1.7 SYSTEM DESCRIPTION

1.7.1 System Requirements

Electricity metering, consisting of meters and associated equipment, will be used to record the electricity consumption and other values as described in the requirements that follow and as shown on the drawings. Communication system requirements are contained in a separate specification section as identified in paragraph entitled "Communications Interfaces".

1.7.2 Selection Criteria

Metering components and software are part of a system that includes the physical meter, data recorder function and communications method. Every building site identified shall include sufficient metering components to measure the electrical parameters identified and to store and communicate the values as required.

Contractor shall verify that the electricity meter installed on any building site is compatible with the base-wide metering system with respect to the types of meters selected and the method used to program the meters for initial use. Software and meter programming tools are necessary to set up the meters described by this specification. New software tools different from the meter programming methods currently used by base personnel will require separate approval for use.

PART 2 PRODUCTS

2.1 ELECTRICITY METERS AND ACCESSORIES

Provide meter(s) and connect the meter(s) to the existing AMI DAS. The contractor shall use the existing government laptop computers to configure the meter using existing software loaded on the computer. The contractor will not be allowed to modify any software or add any additional software to the computer. Alternatively, the government will configure the meter(s), which must be compatible with the existing system, using existing software. Contractor shall insure that the meter(s) will transmit the specified data to the DAS. The current meters being used by MCB Camp Lejeune are: Itron CENTRON meter with ION Enterprise DAS Software and the current AMI contractor is American System.

2.1.1 Physical and Common Requirements

a. Provide metering system components in accordance with the Metering System Schedule shown in this specification. Provide Meter configuration template.

b. Meter shall have NEMA 3R stainless steel enclosure for surface mounting with bottom or rear penetrations.

c. Surge withstand capability shall conform to IEEE C37.90.1.

d. Use #12 SIS (XHHW, or equivalent) wiring with ring lugs for all meter connections. Color code and mark the conductors as follows:

(1) Red - Phase A CT - C1
(2) Orange - Phase B CT - C2
(3) Brown - Phase C CT - C3
(4) Gray with white stripe - neutral current return - C0
(5) Black - Phase A voltage - V1

(6) Yellow - Phase B voltage - V2
(7) Blue - Phase C voltage - V3
(8) White - Neutral voltage

2.1.2 Current Transformer Requirements

a. Current transformer shall be installed with a rating as shown in the schedule.

b. Current transformers shall have an Accuracy Class of 0.3 (with a maximum error of plus/minus 0.3 percent at 5.0 amperes) when operating within the specified rating factor.

c. Current transformers shall be solid-core, bracket-mounted for new installations using ring-tongue lugs for electrical connections. Current transformers shall be accessible and the associated wiring shall be installed in an organized and neat workmanship arrangement. Current transformers that are retrofitted onto existing switchgear busbar can be a busbar split-core design.

d. Current transformers shall have:

(1) Insulation Class: All 600 volt and below current transformers shall be rated 10 KV BIL.

(2) Frequency: Nominal 60 Hz.

(3) Burden: Burden class shall be selected for the load.

(4) Phase Angle Range: 0 to 60 degrees.

e. Meter shall accept current input from standard instrument transformers (5A secondary current transformers).

f. Current inputs shall have a continuous rating in accordance with IEEE C57.13.

g. Provide one single-ratio current transformer for each phase per power transformer with characteristics listed in the following table.

Single-Ratio Current Transformer Characteristics				
kVA	Sec. Volt	CT Ratio	RF	Meter Acc. Class
300	208Y/120	500/5	1.5	0.3 thru B-0.05

2.1.3 Meter Requirements

Provide one meter per transformer. Electricity meters shall include the following features:

a. Meter shall comply with ANSI C12.1, NEMA C12.19, and ANSI C12.20.

b. Meter sockets shall comply with ANSI C12.7.

c. Provide socket-mounted or panel mounted meters as indicated on the

meter schedule.

d. Meter shall be a Class 20, transformer rated design.

e. Meter shall be rated for use at temperature from minus 40 degrees Centigrade to plus 70 degrees Centigrade.

f. The meters shall have an electronic demand recording register and shall be secondary reading as indicated. The register shall be used to indicate maximum kilowatt demand as well as cumulative or continuously cumulative demand. Demand shall be measured on a block-interval basis and shall be capable of a 5 to 60 minute interval and initially set to a 15-minute interval. It shall have provisions to be programmed to calculate demand on a rolling interval basis. Meter readings shall be true RMS.

g. The meter electronic register shall be of modular design with non-volatile data storage. Downloading meter stored data shall be capable via an optical port. Recording capability of data storage with a minimum capability of 89 days of 15 minute, 2 channel interval data. The meter shall be capable of providing at least 2 KYZ pulse outputs (dry contacts). Default initial configuration (unless identified otherwise by base personnel) shall be:

(1) First channel - kWh
(2) Second channel - kVARh
(3) KYZ output #1 - kWh
(4) KYZ output #2 - kVARh

h. All meters shall have identical features available in accordance with this specification. The meter schedule identifies which features shall be activated at each meter location.

i. Enable switches for Time of Use (TOU), pulse and load profile measurement module at the factory.

j. Meter shall have an optical port on front of meter capable of speeds from 9600 to a minimum of 19.2k baud, and shall be initially set at 9600 baud. Optical device shall be compatible with ANSI C12.18.

k. Meters shall be 120-480 volts auto ranging.

l. Provide blank tag fixed to the meter faceplate for the addition of the meter multiplier, which will be the product of the current transformer ratio and will be filled in by base personnel on the job site. The meter's nameplate shall include:

(1) Meter ID number.
(2) Rated voltage.
(3) Current class.
(4) Metering form.
(5) Test amperes.
(6) Frequency.
(7) Catalog number.
(8) Manufacturing date.

m. Meter covers shall be polycarbonate resins with an optical port and reset. Backup battery shall be easily accessible for change-out after removing the meter cover.

n. The normal billing data scroll shall be fully programmable. Data scroll display shall include the following.

(1) Number of demand resets.
(2) End-of-interval indication.
(3) Maximum demand.
(4) New maximum demand indication.
(5) Cumulative or continuously cumulative.
(6) Time remaining in interval.
(7) Kilowatt hours.

o. The register shall incorporate a built-in test mode that allows it to be tested without the loss of any data or parameters. The following quantities shall be available for display in the test mode:

(1) Present interval's accumulating demand.
(2) Maximum demand.
(3) Number of impulses being received by the register.

p. Pulse module simple I/O board with programmable ratio selection.

q. Meters shall be programmed after installation via an optical port. Optical display shall show TOU data, peak kWh, semi-peak kWh, off peak kWh, and phase angles.

r. Self-monitoring to provide for:

(1) Unprogrammed register.
(2) RAM checksum error.
(3) ROM checksum error.
(4) Hardware failure.
(5) Memory failure.
(6) EPROM error.
(7) Battery status (fault, condition, or time in service).

s. Liquid crystal alphanumeric displays, 9 digits, blinking squares confirm register operation. 6 Large digits for data and smaller digits for display identifier.

t. Display operations, programmable sequence with display identifiers. Display identifiers shall be selectable for each item. Continually sequence with time selectable for each item.

u. The meters shall support three modes of registers: Normal Mode, Alternate Mode, and Test Mode. The meter also shall support a "Toolbox" or "Service Information" (accessible in the field) through an optocom port to a separate computer using the supplied software to allow access to instantaneous service information such as voltage, current, power factor, load demand, and the phase angle for individual phases.

v. Meter shall have a standard 4-year warranty.

2.1.4 Disconnect Method

a. Provide a 10-pole safety disconnect complete with isolation devices for the voltage and current transformer inputs, including a shorting means for the current transformers.

2.1.5 Installation Methods

a. Transformer Mounted ("XFMR" in Metering Systems Schedule). Meter base shall be located outside on the secondary side of the pad-mounted transformer.

b. Stand Mounted Adjacent to Transformer ("STAND" in Metering Systems Schedule). Meter base shall be mounted on a structural steel pole approximately 4 feet from the transformer pad. This can be used for multiple meters associated with a single transformers.

c. Building Mounted ("BLDG" in Metering Systems Schedule). Meter base shall be mounted on the side of the existing building near the service entrance.

d. Panel Mounted. ("PNL" in Metering Systems Schedule). Meter shall be mounted where directed.

e. Commercial meter pedestal ("PED" in Metering Systems Schedule).

2.2 COMMUNICATIONS INTERFACES

Meter shall have two-way communication with the existing data acquisition system (DAS). Provide a communications interface utilizing compatible with exisiting metering system on base.

Provide interfacing software if a meter is used that is different than the existing meters at the Activity to ensure compatibility within the metering system.

Coordinate with MCB Camp Lejeune for type of AMI network connection(s).

PART 3 EXECUTION

3.1 INSTALLATION

Electrical installations shall conform to IEEE C2, NFPA 70 (National Electrical Code), and to the requirements specified herein. Provide new equipment and materials unless indicated or specified otherwise.

3.1.1 Scheduling of Work and Outages

The Contract Clauses shall govern regarding permission for power outages, scheduling of work, coordination with Government personnel, and special working conditions.

3.1.2 Configuration Software

The standard meter shall include the latest available version of firmware and software. Meter shall either be programmed at the factory or shall be programmed in the field. Meters shall have a password that shall be provided to the contracting officer upon project completion. When field programming is performed, turn field programming device over to the Contracting Officer at completion of project. When interfacing software is used for a meter that is different than the existing meters in use at the Activity, turn the software over to the Contracting Officer at completion of the project.

3.2 FIELD QUALITY CONTROL

Perform the following acceptance checks and tests on all installed meters.

3.2.1 Performance of Acceptance Checks and Tests

Perform in accordance with the manufacturer's recommendations and include the following visual and mechanical inspections and electrical tests, performed in accordance with NETA ATS.

a. Meter Assembly

(1) Visual and mechanical inspection.

(a) Compare equipment nameplate data with specifications and approved shop drawings.

(b) Inspect physical and mechanical condition. Confirm the meter is firmly seated in the socket, the socket is not abnormally heated, the display is visible, and the ring and seal on the cover are intact.

(c) Inspect all electrical connections to ensure they are tight. For Class 200 services, verify tightness of the service conductor terminations for high resistance using low-resistance ohmmeter, or by verifying tightness of accessible bolted electrical connections by calibrated torque-wrench method.

(d) Record model number, serial number, firmware revision, software revision, and rated control voltage.

(e) Verify operation of display and indicating devices.

(f) Record password and user log-in for each meter.

(g) Verify grounding of metering enclosure.

(h) Set all required parameters including instrument transformer ratios, system type, frequency, power demand methods/intervals, and communications requirements. Verify that the CT ratio and the PT ratio are properly included in the meter multiplier or the programming of the meter. Confirm that the multiplier is provided on the meter face or on the meter.

(2) Electrical tests.

(a) Apply voltage or current as appropriate to each analog input and verify correct measurement and indication.

(b) Confirm correct operation and setting of each auxiliary input/output feature including mechanical relay, digital, and analog.

(c) After initial system energization, confirm measurements and indications are consistent with loads present.

(d) Make note of, and report, any "Error-Code" or "Caution-Code" on the meter's display.

(3) Provide meter configuration report.

b. Current Transformers

(1) Visual and mechanical inspection.

(a) Compare equipment nameplate data with specification and approved shop drawings.

(b) Inspect physical and mechanical condition.

(c) Verify correct connection, including polarity.

(d) Inspect all electrical connections to ensure they are tight.

(e) Verify that required grounding and shorting connections provide good contact.

(2) Electrical Tests.

Verify proper operation by reviewing the meter configuration report.

3.2.2 System Functional Verification

Verify that the installed meters are working correctly in accordance with the meter configuration report:

a. The correct meter form is installed.

b. All voltage phases are present.

c. Phase rotation is correct.

d. Phase angles are correct.

e. The new meter accurately measures power magnitude and direction, and can communicate as required by paragraph entitled "Communications Interfaces".

-- End of Section --

SECTION 26 41 00

LIGHTNING PROTECTION SYSTEM
11/13

PART 1 GENERAL

1.1 REFERENCES

The publications listed below form a part of this specification to the extent referenced. The publications are referred to within the text by the basic designation only.

INSTITUTE OF ELECTRICAL AND ELECTRONICS ENGINEERS (IEEE)

IEEE 81	(2012) Guide for Measuring Earth Resistivity, Ground Impedance, and Earth Surface Potentials of a Ground System

NATIONAL FIRE PROTECTION ASSOCIATION (NFPA)

NFPA 70	(2017) National Electrical Code
NFPA 780	(2017) Standard for the Installation of Lightning Protection Systems

UNDERWRITERS LABORATORIES (UL)

UL 467	(2013) Grounding and Bonding Equipment
UL 96	(2016a) UL Standard for Safety Lightning Protection Components
UL Electrical Constructn	(2012) Electrical Construction Equipment Directory

1.2 RELATED REQUIREMENTS

1.2.1 Verification of Dimensions

Confirm all details of work, verify all dimensions in field, and advise Contracting Officer of any discrepancy before performing work. Obtain prior approval of Contracting Officer before making any departures from the design.

1.2.2 System Requirements

Provide a system furnished under this specification consisting of the latest UL Listed products of a manufacturer regularly engaged in production of lightning protection system components. Comply with NFPA 70, NFPA 780, and UL 96.

1.2.3 Lightning Protection System Installers Documentation

Provide documentation showing that the installer is certified with a commercial third-party inspection company whose sole work is lightning protection, or is a UL Listed Lightning Protection Installer. In either case, the documentation must show that they have completed and passed the

requirements for certification or listing, and have a minimum of 2 years documented experience installing lightning protection systems for DoD projects of similar scope and complexity.

1.3 SUBMITTALS

Government approval is required for submittals with a "G" designation; submittals not having a "G" designation are for Contractor Quality Control approval. Submittals with an "S" are for inclusion in the Sustainability Notebook, in conformance to Section 01 33 29 SUSTAINABILITY REPORTING. Submit the following in accordance with Section 01 33 00 SUBMITTAL PROCEDURES:

SD-02 Shop Drawings

Overall lightning protection system; G

Each major component; G

SD-06 Test Reports

Lightning Protection and Grounding System Test Plan; G

Lightning Protection and Grounding System Test; G

SD-07 Certificates

Lightning Protection System Installers Documentation; G

Component UL Listed and Labeled; G

Lightning protection system inspection certificate; G

Roof manufacturer's warranty; G

1.4 QUALITY ASSURANCE

In each standard referred to herein, consider the advisory provisions to be mandatory, as though the word "shall" or "must" has been substituted for "should" wherever it appears. Interpret references in these standards to "authority having jurisdiction," or words of similar meaning, to mean Contracting Officer.

1.4.1 Installation Drawings

1.4.1.1 Overall System Drawing

Submit installation shop drawing for the overall lightning protection system. Include on the drawings the physical layout of the equipment (plan view and elevations), mounting details, relationship to other parts of the work, and wiring diagrams.

1.4.1.2 Major Components

Submit detail drawings for each major component including manufacturer's descriptive and technical literature, catalog cuts, and installation instructions.

1.4.2 Component UL Listed and Labeled

Submit proof of compliance that components are UL Listed and Labeled. Listing alone in UL Electrical Constructn, which is the UL Electrical Construction Directory, is not acceptable evidence. In lieu of Listed and Labeled, submit written certificate from an approved, nationally recognized testing organization equipped to perform such services, stating that items have been tested and conform to requirements and testing methods of Underwriters Laboratories.

1.4.3 Lightning Protection and Grounding System Test Plan

Provide a lightning protection and grounding system test plan. Detail both the visual inspection and electrical testing of the system and components in the test plan. Identify (number) the system test points/locations along with a listing or description of the item to be tested and the type of test to be conducted. As a minimum, include a sketch of the facility and surrounding lightning protection system as part of the specific test plan for each structure. Include the requirements specified in paragraph, "Testing of Integral Lightning Protection System" in the test plan.

1.4.4 Lightning Protection System Inspection Certificate

Provide certification from a commercial third-party inspection company whose sole work is lightning protection, stating that the lightning protection system complies with NFPA 780. Third party inspection company cannot be the system installer or the system designer. Alternatively, provide a UL Lightning Protection Inspection Master Label Certificate for each facility indicating compliance to NFPA 780.

Inspection must cover every connection, air terminal, conductor, fastener, accessible grounding point and other components of the lightning protection system to ensure 100% system compliance. This includes witnessing the tests for the resistance measurements for ground rods with test wells, and for continuity measurements for bonds. It also includes verification of proper surge protective devices for power, data and telecommunication systems. Random sampling or partial inspection of a facility is not acceptable.

1.5 SITE CONDITIONS

Confirm all details of work, verify all dimensions in field, and advise Contracting Officer of any discrepancy before performing work. Obtain prior approval of Contracting Officer before changing the design.

PART 2 PRODUCTS

2.1 MATERIALS

Do not use a combination of materials that forms an electrolytic couple of such nature that corrosion is accelerated in the presence of moisture unless moisture is permanently excluded from the junction of such metals. Where unusual conditions exist which would cause corrosion of conductors, provide conductors with protective coatings, such as tin or lead, or oversize conductors. Where a mechanical hazard is involved, increase conductor size to compensate for the hazard or protect conductors. When metallic conduit or tubing is provided, electrically bond conductor to conduit or tubing at the upper and lower ends by clamp type connectors or welds (including exothermic). All lightning protection components, such

as bonding plates, air terminals, air terminal supports and braces, chimney bands, clips, connector fittings, and fasteners are to comply with the requirements of UL 96 classes as applicable.

2.1.1 Main and Bonding Conductors

NFPA 780 and UL 96 Class I, Class II, or Class II modified materials as applicable.

2.2 COMPONENTS

2.2.1 Air Terminals

Provide solid air terminals with a blunt tip. Tubular air terminals are not permitted. Support air terminals more than 24 inches in length by suitable brace, supported at not less than one-half the height of the terminal.

2.2.2 Ground Rods

Provide ground rods made of copper-clad steel conforming to conform to UL 467. Provide ground rods that are not less than 3/4 inch in diameter and 10 feet in length. Do not mix ground rods of copper-clad steel or solid copper on the job.

2.2.3 Connections and Terminations

Provide connectors for splicing conductors that conform to UL 96, class as applicable. Conductor connections can be made by clamps or welds (including exothermic). Provide style and size connectors required for the installation.

2.2.4 Connector Fittings

Provide connector fittings for "end-to-end", "Tee", or "Y" splices that conform to NFPA 780 and UL 96.

PART 3 EXECUTION

3.1 INTEGRAL SYSTEM

Provide a lightning protection system that meets the requirements of NFPA 780, including tie-ins to existing lightning protection systems. Lightning protection system consists of air terminals, roof conductors, down conductors, ground connections, and grounding electrodes and ground ring electrode conductor. Expose conductors on the structures except where conductors are required to be in protective sleeves. Bond secondary conductors with grounded metallic parts within the building. Make interconnections within side-flash distances at or below the level of the grounded metallic parts.

3.1.1 Roof-Mounted Components

Coordinate with the roofing manufacturer and provide certification that the roof manufacturer's warranty is not violated by the installation methods for air terminals and roof conductors.

3.1.1.1 Air Terminals

Use a standing seam base for installation of air terminals on a standing seam metal roof that does not produce any roof penetrations.

3.1.1.2 Roof Conductors

Use a standing seam base for installation of roof conductors on a standing seam metal roof that does not produce any roof penetrations.

3.1.2 Down Conductors

Protect exposed down conductors from physical damage as required by NFPA 780. Use Schedule 80 PVC to protect down conductors. Paint the Schedule 80 PVC to match the surrounding surface with paint that is approved for use on PVC.

3.1.3 Ground Connections

Attach each down conductor and ground ring electrode to ground rods by welding (including exothermic), brazing, or compression. All connections to ground rods below ground level must be by exothermic weld connection or with a high compression connection using a hydraulic or electric compression tool to provide the correct circumferential pressure. Accessible connections above ground level and in test wells can be accomplished by mechanical clamping.

3.1.4 Grounding Electrodes

Extend driven ground rods vertically into the existing undisturbed earth for a distance of not less 10 feet. Set ground rods not less than 3 feet nor more than 8 feet, from the structure foundation, and at least beyond the drip line for the facility. After the completed installation, measure the total resistance to ground using the fall-of-potential method described in IEEE 81. Maximum allowed resistance of a driven ground rod is 25 ohms, under normally dry conditions. Contact the Contracting Officer for direction on how to proceed when two of any three ground rods, driven not less than 10 feet into the ground, a minimum of 10 feet apart, and equally spaced around the perimeter, give a combined value exceeding 50 ohms immediately after having driven. For ground ring electrode, provide continuous No. 1/0 bare stranded copper cable. Lay ground ring electrode around the perimeter of the structure in a trench not less than 3 feet nor more than 8 feet from the nearest point of the structure foundation, and at least beyond the drip line for the facility. Install ground ring electrode to a minimum depth of 30 inches. Install a ground ring electrode in earth undisturbed by excavation, not earth fill, and do not locate beneath roof overhang, or wholly under paved areas or roadways where rainfall cannot penetrate to keep soil moist in the vicinity of the cable.

3.2 APPLICATIONS

3.2.1 Nonmetallic Exterior Walls with Metallic Roof

Bond metal roof sections together which are insulated from each other so that they are electrically continuous, having a surface contact of at least 3 square inches.

3.3 INTERFACE WITH OTHER STRUCTURES

3.4 RESTORATION

Where sod has been removed, place sod as soon as possible after completing the backfilling. Restore, to original condition, the areas disturbed by trenching, storing of dirt, cable laying, and other work. Overfill to accommodate for settling. Include necessary topsoil, fertilizing, liming, seeding, sodding, sprigging or mulching in any restoration. Maintain disturbed surfaces and replacements until final acceptance.

3.5 FIELD QUALITY CONTROL

3.5.1 Lightning Protection and Grounding System Test

Test the lightning protection and grounding system to ensure continuity is not in excess of 1 ohm and that resistance to ground is not in excess of 25 ohms. Provide documentation for the measured values at each test point. Test the ground rod for resistance to ground before making connections to the rod. Tie the grounding system together and test for resistance to ground. Make resistance measurements in dry weather, not earlier than 48 hours after rainfall. Include in the written report: locations of test points, measured values for continuity and ground resistances, and soil conditions at the time that measurements were made. Submit results of each test to the Contracting Officer.

-- End of Section --

SECTION 26 51 00

INTERIOR LIGHTING
05/16

PART 1 GENERAL

1.1 REFERENCES

The publications listed below form a part of this specification to the extent referenced. The publications are referred to in the text by the basic designation only.

AMERICAN SOCIETY OF HEATING, REFRIGERATING AND AIR-CONDITIONING ENGINEERS (ASHRAE)

ASHRAE 189.1	(2011) Standard for the Design of High-Performance Green Buildings Except Low-Rise Residential Buildings
ASHRAE 90.1 - IP	(2013) Energy Standard for Buildings Except Low-Rise Residential Buildings

ASTM INTERNATIONAL (ASTM)

ASTM A580/A580M	(2015) Standard Specification for Stainless Steel Wire
ASTM A641/A641M	(2009a; R 2014) Standard Specification for Zinc-Coated (Galvanized) Carbon Steel Wire
ASTM D4674 REV A	(2002; R 2010) Standard Practice for Accelerated Testing for Color Stability of Plastics Exposed to Indoor Office Environments

CALIFORNIA ENERGY COMMISSION (CEC)

CEC Title 24	(2008; Effective Jan 2010) California's Energy Efficiency Standards for Residential and Nonresidential Buildings

ILLUMINATING ENGINEERING SOCIETY (IES)

IES HB-10	(2011; Errata 2015) IES Lighting Handbook
IES LM-79	(2008) Electrical and Photometric Measurements of Solid-State Lighting Products
IES LM-80	(2015) Measuring Lumen Maintenance of LED Light Sources
IES RP-16	(2010; Addendum A 2008; Addenda B 2009; Addendum C 2016) Nomenclature and Definitions for Illuminating Engineering
IES TM-21	(2011; Addendum B 2015) Projecting Long

Term Lumen Maintenance of LED Light Sources

INSTITUTE OF ELECTRICAL AND ELECTRONICS ENGINEERS (IEEE)

IEEE 100	(2000; Archived) The Authoritative Dictionary of IEEE Standards Terms
IEEE C2	(2012; Errata 1 2012; INT 1-4 2012; Errata 2 2013; INT 5-7 2013; INT 8-10 2014; INT 11 2015; INT 12 2016) National Electrical Safety Code
IEEE C62.41	(1991; R 1995) Recommended Practice on Surge Voltages in Low-Voltage AC Power Circuits

NATIONAL ELECTRICAL MANUFACTURERS ASSOCIATION (NEMA)

NEMA 250	(2014) Enclosures for Electrical Equipment (1000 Volts Maximum)
NEMA ANSLG C78.377	(2015) American National Standard for Electric Lamps— Specifications for the Chromaticity of Solid State Lighting Products
NEMA C82.77	(2002) Harmonic Emission Limits - Related Power Quality Requirements for Lighting Equipment
NEMA SSL 1	(2010) Electronic Drivers for Led Devices, Arrays, or Systems
NEMA SSL 3	(2011) High-Power White LED Binning for General Illumination
NEMA SSL 7A	(2015) Phase-Cut Dimming for Solid State Lighting: Basic Compatibility
NEMA WD 1	(1999; R 2015) Standard for General Color Requirements for Wiring Devices

NATIONAL FIRE PROTECTION ASSOCIATION (NFPA)

NFPA 101	(2015; ERTA 2015) Life Safety Code
NFPA 70	(2014; AMD 1 2013; Errata 1 2013; AMD 2 2013; Errata 2 2013; AMD 3 2014; Errata 3-4 2014; AMD 4-6 2014) National Electrical Code

U.S. DEPARTMENT OF DEFENSE (DOD)

DOD 8500.01	(2014) Cybersecurity
DOD 8510.01	(2014) Risk Management Framework (RMF) for DoD Information Technology (IT)

UNDERWRITERS LABORATORIES (UL)

UL 1472	(2015) UL Standard for Safety Solid-State Dimming Controls
UL 1598	(2008; Reprint Oct 2012) Luminaires
UL 20	(2010; Reprint Feb 2012) General-Use Snap Switches
UL 2043	(2013) Fire Test for Heat and Visible Smoke Release for Discrete Products and Their Accessories Installed in Air-Handling Spaces
UL 508	(1999; Reprint Oct 2013) Industrial Control Equipment
UL 8750	(2009; Reprint May 2014) UL Standard for Safety Light Emitting Diode (LED) Equipment for Use in Lighting Products
UL 916	(2007; Reprint Aug 2014) Standard for Energy Management Equipment
UL 924	(2006; Reprint Dec 2015) Standard for Emergency Lighting and Power Equipment
UL 94	(2013; Reprint Jan 2016) Standard for Tests for Flammability of Plastic Materials for Parts in Devices and Appliances

1.2 RELATED REQUIREMENTS

Materials not considered to be luminaires or luminaire accessories are specified in Section 26 20 00 INTERIOR DISTRIBUTION SYSTEM. Luminaires and accessories mounted on exterior surfaces of buildings are specified in Section 26 56 00 EXTERIOR LIGHTING.

1.3 DEFINITIONS

a. Unless otherwise specified or indicated, electrical and electronics terms used in these specifications, and on the drawings, must be as defined in IEEE 100 and IES RP-16.

b. For LED luminaire light sources, "Useful Life" is the operating hours before reaching 70 percent of the initial rated lumen output (L70) with no catastrophic failures under normal operating conditions. This is also know as 70 percent "Rated Lumen Maintenance Life" as defined in IES LM-80.

c. For LED luminaires, "Luminaire Efficacy" (LE) is the appropriate measure of energy efficiency, measured in lumens/watt. This is gathered from LM-79 data for the luminaire, in which absolute photometry is used to measure the lumen output of the luminaire as one entity, not the source separately and then the source and housing together.

d. Total harmonic distortion (THD) is the root mean square (RMS) of all

the harmonic components divided by the total fundamental current.

1.4 SUBMITTALS

Government approval is required for submittals with a "G" designation; submittals not having a "G" designation are for Contractor Quality Control approval. Submittals with an "S" are for inclusion in the Sustainability Notebook, in conformance with Section 01 33 29 SUSTAINABILITY REPORTING. Data, drawings, and reports must employ the terminology, classifications and methods prescribed by the IES HB-10 as applicable, for the lighting system specified. Submit the following in accordance with Section 01 33 00 SUBMITTAL PROCEDURES:

SD-02 Shop Drawings

Luminaire Drawings; G

Occupancy/Vacancy Sensor Coverage Layout; G

SD-03 Product Data

Luminaires; G

Light Sources; G

Drivers; G

LED Luminaire Warranty; G

Luminaire Design Data; G

Vacancy Sensors; G

Dimming Controllers (Dimmers); G

Exit Signs; G

Emergency Lighting Unit (EBU); G

Occupancy Sensors; G

Ambient Light Level Sensor ; G

SD-06 Test Reports

LED Luminaire - IES LM-79 Test Report; G

LED Light Source - IES LM-80 Test Report; G

LED Light Source - IES TM-21 Test Report; G

Occupancy/Vacancy Sensor Verification Tests; G

Energy Efficiency; G

SD-07 Certificates

Luminaire Useful Life Certificate; G

LED Driver and Dimming Switch Compatibility Certificate; G

1.5 QUALITY CONTROL

1.5.1 Luminaire Drawings

Include dimensions, accessories, and installation and construction details. Photometric data, including zonal lumen data, average and minimum ratio, aiming diagram, and computerized candlepower distribution data must accompany shop drawings.

1.5.2 Occupancy/Vacancy Sensor Coverage Layout

Provide floor plans showing coverage layouts of all devices using manufacturer's product information.

1.5.3 LED Driver and Dimming Switch Compatibility Certificate

Submit certification from the luminaire, driver, or dimmer switch manufacturer that ensures compatibility and operability between devices.

1.5.4 Luminaire Design Data

a. Provide safety certification and file number for the luminaire family that must be listed, labeled, or identified per the NFPA 70 (NEC). Applicable testing bodies are determined by the US Occupational Safety Health Administration (OSHA) as Nationally Recognized Testing Laboratories (NRTL) and include: CSA (Canadian Standards Association), ETL (Edison Testing Laboratory), and UL (Underwriters Laboratories).

b. Provide long term lumen maintenance projections for each LED luminaire in accordance with IES TM-21. Data used for projections must be obtained from testing in accordance with IES LM-80.

1.5.5 LED Luminaire - IES LM-79 Test Report

Submit test report on manufacturer's standard production model luminaire. Include all applicable and required data as outlined under "14.0 Test Report" in IES LM-79.

1.5.6 LED Light Source - IES LM-80 Test Report

Submit report on manufacturer's standard production LED light source (package, array, or module). Include all applicable and required data as outlined under "8.0 Test Report" in IES LM-80.

1.5.7 LED Light Source - IES TM-21 Test Report

Submit test report on manufacturer's standard production LED light source (package, array or module). Include all applicable and required data, as well as required interpolation information as outlined under "7.0 Report" in IES TM-21.

1.5.8 Occupancy/Vacancy Sensor Verification Tests

Submit test report outlining post-installation coverage and operation of sensors.

1.5.9 Test Laboratories

Test laboratories for the IES LM-79 and IES LM-80 test reports must be one of the following:

a. National Voluntary Laboratory Accreditation Program (NVLAP) accredited for solid-state lighting testing as part of the Energy-Efficient Lighting Products laboratory accreditation program for both LM-79 and LM-80 testing.

b. One of the qualified labs listed on the Department of Energy - LED Lighting Facts Approved Testing Laboratories List at for LM-79 testing.

c. One of the EPA-Recognized Laboratories listed at for LM-80 testing.

1.5.10 Regulatory Requirements

In each of the publications referred to herein, consider the advisory provisions to be mandatory, as though the word "must" had been substituted for "should" wherever it appears. Interpret references in these publications to the "authority having jurisdiction," or words of similar meaning, to mean the Contracting Officer. Equipment, materials, installation, and workmanship must be in accordance with the mandatory and advisory provisions of NFPA 70, unless more stringent requirements are specified or indicated.

1.5.11 Standard Products

Provide materials and equipment that are products of manufacturers regularly engaged in the production of such products which are of equal material, design and workmanship. Products must have been in satisfactory commercial or industrial use for two years prior to bid opening. The two-year period must include applications of equipment and materials under similar circumstances and of similar size. The product must have been on sale on the commercial market through advertisements, manufacturers' catalogs, or brochures during the two-year period. Where two or more items of the same class of equipment are required, these items must be products of a single manufacturer; however, the component parts of the item need not be the products of the same manufacturer unless stated in this section.

1.5.11.1 Alternative Qualifications

Products having less than a 2-year field service record will be acceptable if a certified record of satisfactory field operation for not less than 6000 hours, exclusive of the manufacturers' factory or laboratory tests, is furnished.

1.5.11.2 Material and Equipment Manufacturing Date

Products manufactured more than six months prior to date of delivery to site must not be used, unless specified otherwise.

1.5.11.3 Energy Efficiency

Submit data indicating lumens per watt efficacy and color rendering index of light source.

1.6 WARRANTY

Support all equipment items by service organizations which are reasonably convenient to the equipment installation in order to render satisfactory service to the equipment on a regular and emergency basis during the warranty period of the contract.

1.6.1 LED Luminaire Warranty

a. Provide a written 10 year on-site replacement warranty for material, fixture finish, and workmanship. On-site replacement includes transportation, removal, and installation of new products.

(1) Include finish warranty to include failure and substantial deterioration such as blistering, cracking, peeling, chalking, or fading.

(2) Material warranty must include:

(a) All drivers.

(b) Replacement when more than 10 percent of LED sources in any lightbar or subassembly(s) are defective or non-starting.

b. Warranty period must begin on date of beneficial occupancy. Provide the Contracting Officer with signed warranty certificates prior to final payment.

1.6.1.1 Provide Luminaire Useful Life Certificate

Submit certification from the manufacturer indicating the expected useful life of the luminaires provided. The useful life must be directly correlated from the IES LM-80 test data using procedures outlined in IES TM-21. Thermal properties of the specific luminaire and local ambient operating temperature and conditions must be taken into consideration.

PART 2 PRODUCTS

2.1 PRODUCT COORDINATION

Products and materials not considered to be luminaires, luminaire controls, or associated equipment are specified in Section 26 20 00 INTERIOR DISTRIBUTION SYSTEM. Luminaires, luminaire controls, and associated equipment for exterior applications are specified in Section 26 56 00 EXTERIOR LIGHTING.

2.2 LUMINAIRES

UL 1598, NEMA C82.77, and UL 8750. Provide luminaires as indicated in luminaire schedule and NL plates or details on project plans. Provide luminaires complete with light sources of quantity, type, and wattage indicated. Provide all luminaires of the same type by the same manufacturer. Luminaires must be specifically designed for use with the driver, ballast or generator and light source provided.

2.2.1 LED Luminaires

Provide luminaires complete with power supplies (drivers) and light sources. Provide design information including lumen output and design life in luminaire schedule on project plans for LED luminaires. LED

luminaires must meet the minimum requirements in the following table:

LUMINAIRE TYPE	MINIMUM LUMINAIRE EFFICACY (LE)	MINIMUM COLOR RENDERING INDEX (CRI)
LED TROFFER - 1 x 4 2 x 2 2 x 4	90 LPW	80
LED Downlight	50 LPW	90
LED Track or Accent	40 LPW	80
LED Low Bay/High Bay	80 LPW	70
LED Linear Ambient	80 LPW	80

LED luminaires must also meet the following minimum requirements:

a. Luminaires must have a minimum 10 year manufacturer's warranty.

b. Luminaires must have a minimum L70 lumen maintenance value of 50,000 hours as calculated by IES TM-21, with data obtained per IES LM-80 requirements.

c. Luminaire drive current value must be identical to that provided by test data for luminaire in question.

d. Luminaires must be tested to IES LM-79 and IES LM-80 standards, with the results provided as required in the Submittals paragraph of this specification.

e. Luminaires must be listed with the DesignLights Consortium 'Qualified Products List' when falling into category of "General Application" luminaires, i.e. Interior Directional, Display Case, Troffer, Linear Ambient, or Low/High Bay. Requirements are shown in the Designlights Consortium "Technical Requirements Table" at https://data.energystar.gov/dataset/EPA-Recognized-Laboratories-For-Lighting-Produ

f. Provide Department of Energy 'Lighting Facts' label for each luminaire.

2.3 DRIVERS

2.3.1 LED Drivers

NEMA SSL 1, UL 8750. LED drivers must be electronic, UL Class 1, constant-current type and comply with the following requirements:

a. Output power (watts)and luminous flux (lumens) as shown in luminaire schedule for each luminaire type to meet minimum luminaire efficacy (LE) value provided.

b. Power Factor (PF) greater than or equal to 0.9 over the full dimming range when provided.

c. Current draw Total Harmonic Distortion (THD) of less than 20 percent.

d. Class A sound rating.

e. Operable at input voltage of 120-277 volts at 60 hertz.

f. Minimum 10 year manufacturer's warranty.

g. RoHS compliant.

h. Integral thermal protection that reduces or eliminates the output power if case temperature exceeds a value detrimental to the driver.

i. UL listed for dry or damp locations typical of interior installations.

j. Step-dimmable to 50 percent output, or fully-dimmable using 0-10V control as indicated in luminaire schedule.

2.4 LIGHT SOURCES

NEMA ANSLG C78.377, NEMA SSL 3. Provide type and wattage as indicated in luminaire schedule on project plans.

2.4.1 LED Light Sources

a. Maximum correlated Color Temperature (CCT) valuue of 4100 degrees K.

b. Minimum Color Rendering Index (CRI) R9 value of 80.

c. High power, white light output utilizing phosphor conversion (PC) process or mixed system of colored LEDs, typically red, green and blue (RGB).

d. RoHS compliant.

e. Provide light source color consistancy by utilizing a binning tolerance within a 4 step McAdam ellipse.

2.5 LIGHTING CONTROLS

ASHRAE 90.1 - IP, ASHRAE 189.1. Provide integrated controls to control indicated lighting and receptacles based on occupancy of the spaces. Provide network certification for all networked lighting control systems and devices per requirements of DOD 8500.01 and DOD 8510.01.

2.5.1 Toggle Switches

Provide line-voltage toggle switches as specified in Section 26 20 00 INTERIOR DISTRIBUTION SYSTEM.

2.5.2 Dimming Controllers (Dimmers)

UL 1472, UL 20, IEEE C62.41, NEMA SSL 7A. 120/277 V dimmers must provide flicker-free, continuously variable light output throughout the dimming range. Provide radio frequency interference suppression integral to device. Provide dimmers utilizing pulse width modulation (PWM) or constant current reduction (CCR) technology. Provide device with a vertical slider, paddle, rotary button, or toggle (with adjacent vertical slider) type control, with finish to match switches and outlets in same area. Provide back box in wall with sufficient depth to accomodate body of switch and wiring. Devices must be capable of operating at their full rated capacity regardless of being single or ganged-mounted, and be compatible with three-way and four-way switching scenarios. Dimmers must

be capable of controlling two-wire LED drivers. Ensure compatibility of dimmer with separate power packs when utilized for lighting control. Dimmers and the ballasts or drivers they control, must be provided from the same manufacturer, or tested and certified as compatible for use together. Provide NEMA SSL 7A-compiant devices.

2.5.3 Sensors for Lighting Control

IEEE C62.41, NEMA WD 1, UL 94, UL 916, UL 508, ASTM D4674 REV A.

2.5.3.1 Occupancy Sensors

Provide occupancy sensors with coverage patterns as indicated on project plans. Provide no less quantity of sensors as shown on plans, but add additional sensors when required to fulfill coverage requirement for the specific model sensor provided. Sensor must be provided with an adaptive learning function that automaticaly sets sensor in optimum calibration in a set period of time after installation and a non-volatile memory that saves settings after a power outage. Provide sensors designed for ceiling, wall or wall-box installation as indicated. Operating voltage must be 120 volts for P1481 and 277 volts for P1482. Provide housing of high-impact, injection-molded thermoplastic with a multi-segmented lens for PIR and dual technology sensors. Sensor operation requires movement to activate luminaires controlled, and turns luminaires off after a set time of inactivity.

2.5.3.1.1 Passive Infrared (PIR) Sensors

Provide ceiling or wall-mounted PIR sensors meeting the following requirements:

a. Temperature compensated, dual element sensor and a multi-element fresnel lens (Poly IR4 material).

b. Technology to optimize automatic time delay to fit occupant usage patterns.

c. No minimum load requirement for line voltage sensors and be capable of switching from zero to 800 W at 120 VAC, 50/60 Hz and from zero to 1200 W at 277 VAC, 50/60 Hz. Control voltage sensors must not exceed a maximum load requirement of 20 mA at 24VDC.

d. Time delay of five to 30 minutes in increments of five minutes with a walk through and test mode set by DIP switch.

e. LED indicator that remains active during occupancy.

f. Built-in light level sensor that is operational from 8 to 180 foot-candles.

g. Coverage pattern tested to NEMA WD 7 standards.

h. Standard five year warranty and be UL listed

i. No leakage current to load when in the off mode.

2.5.3.1.2 Ultrasonic Sensors

Provide ceiling-mounted ultrasonic sensors meeting the following

requirements:

a. Operate at an ultrasonic frequency of 25 kHz.

b. LED on exterior of device to indicate occupant detection.

c. Adjustable time delay period of 15 seconds to 15 minutes.

d. UL listed with minimum five year warranty.

2.5.3.1.3 Dual Technology Sensors

Provide dual technology sensors that meet the requirements for PIR sensors and ultrasonic sensors indicated above. If either the passive infrared or ultrasonic sensing registers occupancy, the luminaires must remain on.

2.5.3.1.4 Power Packs for Sensors

UL 2043, CEC Title 24, ASHRAE 90.1 - IP. Power packs used to provide power to one or more lighting control sensors must meet the following requirements:

a. Input voltage - 120-277 VAC; output voltage - 24 VDC at 225 mA.

b. Plenum-rated, high-impact thermoplastic enclosure.

c. Utilizes zero-crossing circuitry to prevent damage from inrush current.

d. Maximum load rating of 16 amps for electronic lighting loads.

e. RoHS compliant.

2.5.3.2 Vacancy Sensors

Provide vacancy sensors as indicated above under paragraph OCCUPANCY SENSORS, but with requirement of a manual operation to activate luminaires controlled. Provide automatic operation to turn luminaires off after a set period of inactivity.

2.5.4 Local Area Lighting Controller

CEC Title 24 and ASHRAE 90.1 - IP compliant. Provide controller designed for single area or room with the following requirements:

a. 120 volt input for P1481 and 277 volt input for P1482, designed for LED lighting loads.

b. Provide daylight harvesting capabilty with full-range dimming control.

c. Inputs for occupancy sensor, photocell, and low-voltage wall switch.

e. Provide capability for receptacle load control.

2.6 EXIT AND EMERGENCY LIGHTING EQUIPMENT

UL 924, NFPA 101, and NFPA 70 compliant.

2.6.1 Exit Signs

Provide exit signs consuming a maximum of five watts total.

2.6.1.1 LED Self-Powered Exit Signs

Provide in UV-stable, thermo-plastic housing with UL damp label and UL wet label in shower room(s), configured for ceiling, wall and end mounting. Provide edge-lit type with clear acrylic, edge-lit face and aluminum trim having clear aluminumwhite, chrome, or brass finish. Provide 6 inch high, 3/4 inch stroke red lettering on face of sign. Provide chevrons on either side of lettering to indicate direction. Provide single face. Equip with automatic power failure device, test switch, and pilot light, and fully automatic high/low trickle charger in a self-contained power pack. Battery must be sealed, maintenance free nickel-cadmium type, and must operate unattended for a period of not less than five years. Emergency run time must be a minimum of 1 1/2 hours. LEDs must have a minimum rated life of 10 years.

2.6.2 Emergency Lighting Unit (EBU)

Provide in UV-stable, thermo-plastic housing with UL damp label as indicated. Emergency lighting units must be rated for 12 volts, except units having no remote-mounted lamps and having no more than two unit-mounted light sources may be rated six volts. Equip units with brown-out sensitive circuit to activate battery when input voltage falls to 75 percent of normal. Equip with two LED, MR-16 type light sources, automatic power failure device, test switch, and pilot light, and fully automatic high/low trickle charger in a self-contained power pack. Battery must be sealed, maintenance free type, and must operate unattended for a period of not less than five years. Emergency run time must be a minimum of 1 1/2 hours. LEDs must have a minimum rated life of 10 years.

2.7 LUMINAIRE SUPPORT HARDWARE

2.7.1 Wire

ASTM A641/A641M; Galvanized, soft tempered steel, minimum 0.11 inches in diameter, or galvanized, braided steel, minimum 0.08 inches in diameter.

2.7.2 Wire for Humid Spaces

ASTM A580/A580M; Composition 302 or 304, annealed stainless steel, minimum 0.11 inches in diameter.

2.7.3 Threaded Rods

Threaded steel rods, 3/16 inch diameter, zinc or cadmium coated.

2.8 EQUIPMENT IDENTIFICATION

2.8.1 Manufacturer's Namplate

Each item of equipment must have a nameplate bearing the manufacturer's name, address, model number, and serial number securely affixed in a conspicuous place; the nameplate of the distributing agent will not be acceptable.

2.8.2 Labels

Provide labeled luminaires in accordance with UL 1598 requirements. All

luminaires must be clearly marked for operation of specific light sources and ballasts, generators or drivers. Note the following light source characteristics in the format "Use Only _____":

a. Correlated color temperature (CCT) and color rendering index (CRI) for all luminaires.

All markings related to light source type must be clear and located to be readily visible to service personnel, but unseen from normal viewing angles when light sources are in place. Drivers must have clear markings indicating multi-level outputs and indicate proper terminals for the various outputs.

2.9 FACTORY APPLIED FINISH

Provide all luminaires and lighting equipment with factory-applied painting system that as a minimum, meets requirements of NEMA 250 corrosion-resistance test.

2.10 RECESS- AND FLUSH-MOUNTED LUMINAIRES

Provide access to lamp and driver from bottom of luminaire. Provide trim and lenses for the exposed surface of flush-mounted luminaires as indicated on project drawings and specifications.

2.11 SUSPENDED LUMINAIRES

Provide hangers capable of supporting twice the combined weight of luminaires supported by hangers. Provide with swivel hangers to ensure a plumb installation. Provide cadmium-plated steel with a swivel-ball tapped for the conduit size indicated. Hangers must allow fixtures to swing within an angle of 45 degrees. Brace pendants 4 feet or longer to limit swinging. Single-unit suspended luminaires must have twin-stem hangers. Multiple-unit or continuous row luminaires must have a tubing or stem for wiring at one point and a tubing or rod suspension provided for each unit length of chassis, including one at each end. Provide rodsRods in minimum 0.18 inch diameter.

PART 3 EXECUTION

3.1 INSTALLATION

Electrical installations must conform to IEEE C2, NFPA 70, and to the requirements specified herein. Install luminaires and lighting controls to meet the requirements of ASHRAE 90.1 - IP and ASHRAE 189.1. To encourage consistancy and uniformity, install luminaires of the same manufacture and model number when residing in the same facility or building.

3.1.1 Light Sources

When light sources are not provided as an integral part of the luminaire, deliver light sources of the type, wattage, lumen output, color temperature, color rendering index, and voltage rating indicated to the project site and install just prior to project completion, if not already installed in the luminaires from the factory.

3.1.2 Luminaires

Set luminaires plumb, square, and level with ceiling and walls, in alignment with adjacent luminaires and secure in accordance with manufacturers' directions and approved drawings. Installation must meet requirements of NFPA 70. Mounting heights specified or indicated must be to the bottom of the luminaire for ceiling-mounted luminaires and to center of luminaire for wall-mounted luminaires. Obtain approval of the exact mounting height on the job before commencing installation and, where applicable, after coordinating with the type, style, and pattern of the ceiling being installed. Recessed and semi-recessed luminaires must be independently supported from the building structure by a minimum of four wires, straps or rods per luminaire and located near each corner of the luminiare. Ceiling grid clips are not allowed as an alternative to independently supported luminaires. Round luminaires or luminaires smaller in size than the ceiling grid must be independently supported from the building structure by a minimum of four wires, straps or rods per luminaire, spaced approximately equidistant around. Do not support luminaires by acoustical tile ceiling panels. Where luminaires of sizes less than the ceiling grid are indicated to be centered in the acoustical panel, support each independently and provide at least two 3/4 inch metal channels spanning, and secured to, the ceiling tees for centering and aligning the luminiare. Provide wires, straps, or rods for luminaire support in this section.

3.1.3 Suspended Luminaires

Provide suspended luminaires with 45 degree swivel hangers so that they hang plumb and level. Locate so that there are no obstructions within the 45 degree range in all directions. The stem, canopy and luminaire must be capable of 45 degree swing. Pendants, rods, or chains 4 feet or longer excluding luminaire must be braced to prevent swaying using three cables at 120 degree separation. Suspended luminaires in continuous rows must have internal wireway systems for end to end wiring and must be properly aligned to provide a straight and continuous row without bends, gaps, light leaks or filler pieces. Utilize aligning splines on extruded aluminum luminaires to assure minimal hairline joints. Support steel luminaires to prevent "oil-canning" effects. Luminaire finishes must be free of scratches, nicks, dents, and warps, and must match the color and gloss specified. Match supporting pendants with supported luminaire. Aircraft cable must be stainless steel. Canopies must be finished to match the ceiling and must be low profile unless otherwise shown. Maximum distance between suspension points must be 10 feet or as recommended by the manufacturer, whichever is less.

3.1.4 Power Supplies

Typically, providepower supplies (drivers) integral to luminaire as constructed by the manufacturer.

3.1.5 Exit Signs and Emergency Lighting Units

Wire exit signs and emergency lighting units ahead of the local switch, to the normal lighting circuit located in the same room or area.

3.1.6 Photocell Switch Aiming

Aim switch according to manufacturer's recommendations.

3.1.7 Occupancy/Vacancy Sensors

Provide testing od sensor coverage in all spaces where sensors are placed. This should be done only after all furnishings (carpet, furniture, workstations, etc.) have been installed. Provide quantity of sensor units indicated as a minimum. Provide additional units to give full coverage over controlled area. Full coverage must provide hand and arm motion detection for office and administration type areas and walking motion for industrial areas, warehouses, storage rooms and hallways. Locate the sensor(s) as indicated and in accordance with the manufacturer's recommendations to maximize energy savings and to avoid nuisance activation and deactivation due to sudden temperature or airflow changes and usage.

3.1.8 Daylight or Ambient Light Level Sensor

Locate sensor as indicated and in accordance with the manufacturer's recommendations. Adjust sensor for 30 footcandlesor for the indicated light level measured at the work plane for that particular area.

3.2 FIELD APPLIED PAINTING

Paint lighting equipment as required to match finish of adjacent surfaces or to meet the indicated or specified safety criteria. Provide painting as specified in Section 09 90 00 PAINTS AND COATINGS.

-- End of Section --

THIS PAGE HAS BEEN INTENTIONALLY LEFT BLANK

SECTION 26 56 00

EXTERIOR LIGHTING
05/13

PART 1 GENERAL

1.1 REFERENCES

The publications listed below form a part of this specification to the extent referenced. The publications are referred to in the text by the basic designation only.

AMERICAN ASSOCIATION OF STATE HIGHWAY AND TRANSPORTATION OFFICIALS (AASHTO)

AASHTO LTS	(2013; Errata 2013) Standard Specifications for Structural Supports for Highway Signs, Luminaires and Traffic Signals

AMERICAN SOCIETY OF HEATING, REFRIGERATING AND AIR-CONDITIONING ENGINEERS (ASHRAE)

ASHRAE 90.1 - IP	(2013) Energy Standard for Buildings Except Low-Rise Residential Buildings

ASTM INTERNATIONAL (ASTM)

ASTM B117	(2016) Standard Practice for Operating Salt Spray (Fog) Apparatus
ASTM C1089	(2013) Standard Specification for Spun Cast Prestressed Concrete Poles

ILLUMINATING ENGINEERING SOCIETY (IES)

IES HB-10	(2011; Errata 2015) IES Lighting Handbook
IES LM-79	(2008) Electrical and Photometric Measurements of Solid-State Lighting Products
IES LM-80	(2015) Measuring Lumen Maintenance of LED Light Sources
IES RP-16	(2010; Addendum A 2008; Addenda B 2009; Addendum C 2016) Nomenclature and Definitions for Illuminating Engineering
IES RP-8	(2014) Roadway Lighting
IES TM-15	(2011) Luminaire Classification System for Outdoor Luminaires
IES TM-21	(2011; Addendum B 2015) Projecting Long Term Lumen Maintenance of LED Light Sources

INSTITUTE OF ELECTRICAL AND ELECTRONICS ENGINEERS (IEEE)

IEEE 100	(2000; Archived) The Authoritative Dictionary of IEEE Standards Terms
IEEE C2	(2012; Errata 1 2012; INT 1-4 2012; Errata 2 2013; INT 5-7 2013; INT 8-10 2014; INT 11 2015; INT 12 2016) National Electrical Safety Code
IEEE C62.41.2	(2002) Recommended Practice on Characterization of Surges in Low-Voltage (1000 V and Less) AC Power Circuits

NATIONAL ELECTRICAL MANUFACTURERS ASSOCIATION (NEMA)

ANSI C136.13	(2004; R 2009) American National Standard for Roadway Lighting Equipment, Metal Brackets for Wood Poles
ANSI C136.21	(2014) American National Standard for Roadway and Area Lighting Equipment - Vertical Tenons Used with Post-Top-Mounted Luminaires
ANSI C136.3	(2014) American National Standard for Roadway and Area Lighting Equipment Luminaire Attachments
NEMA 250	(2014) Enclosures for Electrical Equipment (1000 Volts Maximum)
NEMA ANSLG C78.377	(2015) American National Standard for Electric Lamps— Specifications for the Chromaticity of Solid State Lighting Products
NEMA C136.31	(2010) American National for Roadway and Area Lighting Equipment - Luminaire Vibration
NEMA C82.77	(2002) Harmonic Emission Limits - Related Power Quality Requirements for Lighting Equipment
NEMA WD 7	(2011) Occupancy Motion Sensors Standard

NATIONAL FIRE PROTECTION ASSOCIATION (NFPA)

NFPA 70	(2014; AMD 1 2013; Errata 1 2013; AMD 2 2013; Errata 2 2013; AMD 3 2014; Errata 3-4 2014; AMD 4-6 2014) National Electrical Code

U.S. NATIONAL ARCHIVES AND RECORDS ADMINISTRATION (NARA)

47 CFR 15	Radio Frequency Devices

UNDERWRITERS LABORATORIES (UL)

UL 1310	(2011; Reprint Dec 2014) UL Standard for Safety Class 2 Power Units
UL 1598	(2008; Reprint Oct 2012) Luminaires
UL 773	(1995; Reprint Jul 2015) Standard for Plug-In, Locking Type Photocontrols for Use with Area Lighting
UL 773A	(2016) Standard for Nonindustrial Photoelectric Switches for Lighting Control
UL 8750	(2009; Reprint May 2014) UL Standard for Safety Light Emitting Diode (LED) Equipment for Use in Lighting Products

1.2 RELATED REQUIREMENTS

Materials not considered to be luminaires or lighting equipment are specified in Section(s) 33 71 02 UNDERGROUND ELECTRICAL DISTRIBUTION . Luminaires and accessories installed in interior of buildings are specified in Section 26 51 00 INTERIOR LIGHTING.

1.3 DEFINITIONS

a. Unless otherwise specified or indicated, electrical and electronics terms used in these specifications, and on the drawings shall be as defined in IEEE 100 and IES RP-16.

b. For LED luminaire light sources, "Useful Life" is the operating hours before reaching 70 percent of the initial rated lumen output (L70) with no catastrophic failures under normal operating conditions. This is also known as 70 percent "Rated Lumen Maintenance Life" as defined in IES LM-80.

1.4 SUBMITTALS

Government approval is required for submittals with a "G" designation; submittals not having a "G" designation are for Contractor Quality Control approval. Submittals with an "S" are for inclusion in the Sustainability Notebook, in conformance to Section 01 33 29 SUSTAINABILITY REPORTING. Submit the following in accordance with Section 01 33 00 SUBMITTAL PROCEDURES:

SD-01 Preconstruction Submittals

Photometric Plan; G

LED Luminaire Warranty; G

SD-02 Shop Drawings

Luminaire drawings; G

Poles; G

SD-03 Product Data

LED Luminaires; G

Luminaire Light Sources; G

Luminaire Power Supply Units (Drivers); G

Motion Sensor; G

Photocell; G

Concrete poles; G

Brackets; G

SD-05 Design Data

Design Data for luminaires; G

SD-06 Test Reports

LED Luminaire - IES LM-79 Test Report; G

LED Light Source - IES LM-80 Test Report; G

Operating test

Submit operating test results as stated in paragraph entitled "Field Quality Control."

SD-07 Certificates

Luminaire Useful Life Certificate; G

Submit certification from the manufacturer indicating the expected useful life of the luminaires provided. The useful life shall be directly correlated from the IES LM-80 test data using procedures outlined in IES TM-21. Thermal properties of the specific luminaire and local ambient operating temperature and conditions shall be taken into consideration.

SD-08 Manufacturer's Instructions

Concrete poles

Submit instructions prior to installation.

SD-10 Operation and Maintenance Data

Operational Service

Submit documentation that includes contact information, summary of procedures, and the limitations and conditions applicable to the project. Indicate manufacturer's commitment to reclaim materials for recycling and/or reuse.

1.5 QUALITY ASSURANCE

1.5.1 Drawing Requirements

1.5.1.1 Luminaire Drawings

Include dimensions, effective projected area (EPA), accessories, and installation and construction details. Photometric data, including zonal lumen data, average and minimum ratio, aiming diagram, and computerized candlepower distribution data shall accompany shop drawings.

1.5.1.2 Poles

Include dimensions, wind load determined in accordance with AASHTO LTS, pole deflection, pole class, and other applicable information. For concrete poles, include: section and details to indicate quantities and position of prestressing steel, spiral steel, inserts, and through holes; initial prestressing steel tension; and concrete strengths at release and at 28 days.

1.5.2 Photometric Plan

For LED luminaires, include computer-generated photometric analysis of the "designed to" values for the "end of useful life" of the luminaire installation using a light loss factor of 0.7. For LED and all other types of luminaires, the submittal shall include the following:

Horizontal illuminance measurements at finished grade, taken at a maximum of every 10 feet.

Vertical illuminance measurements at 5 feet above finished grade.

Minimum and maximum footcandle levels.

Average maintained footcandle level.

Maximum to minimum ratio for horizontal illuminance only.

1.5.3 Design Data for Luminaires

a. Provide distribution data according to IES classification type as defined in IES HB-10.

b. Shielding as defined by IES RP-8 or B.U.G. rating for the installed position as defined by IES TM-15.

c. Provide safety certification and file number for the luminaire family. Include listing, labeling and identification per NFPA 70 (NEC). Applicable testing bodies are determined by the US Occupational Safety Health Administration (OSHA) as Nationally Recognized Testing Laboratories (NRTL) and include: CSA (Canadian Standards Association), ETL (Edison Testing Laboratory), and UL (Underwriters Laboratories).

d. Provide long term lumen maintenance projections for each LED luminaire in accordance with IES TM-21. Data used for projections shall be obtained from testing in accordance with IES LM-80.

e. Provide wind loading calculations for luminaires mounted on poles. Weight and effective projected area (EPA) of luminaires and mounting brackets shall not exceed maximum rating of pole as installed in particular wind zone area.

1.5.4 LED Luminaire - IES LM-79 Test Report

Submit test report on manufacturer's standard production model luminaire. Submittal shall include all photometric and electrical measurements, as well as all other pertinent data outlined under "14.0 Test Report" in IES LM-79.

1.5.5 LED Light Source - IES LM-80 Test Report

Submit report on manufacturer's standard production LED package, array, or module. Submittal shall include:

a. Testing agency, report number, date, type of equipment, and LED light source being tested.

b. All data required by IES LM-80.

1.5.5.1 Test Laboratories

Test laboratories for the IES LM-79 and IES LM-80 test reports shall be one of the following:

a. National Voluntary Laboratory Accreditation Program (NVLAP) accredited for solid-state lighting testing as part of the Energy-Efficient Lighting Products laboratory accreditation program.

b. One of the qualified labs listed on the Department of Energy - Energy Efficiency & Renewable Energy, Solid-State Lighting web site.

c. A manufacturer's in-house lab that meets the following criteria:

1. Manufacturer has been regularly engaged in the design and production of high intensity discharge roadway and area luminaires and the manufacturer's lab has been successfully certifying these fixtures for a minimum of 15 years.

2. Annual equipment calibration including photometer calibration in accordance with National Institute of Standards and Technology.

1.5.6 Regulatory Requirements

In each of the publications referred to herein, consider the advisory provisions to be mandatory, as though the word, "shall" had been substituted for "should" wherever it appears. Interpret references in these publications to the "authority having jurisdiction," or words of similar meaning, to mean the Contracting Officer. Equipment, materials, installation, and workmanship shall be in accordance with the mandatory and advisory provisions of NFPA 70 unless more stringent requirements are specified or indicated.

1.5.7 Standard Products

Provide materials and equipment that are products of manufacturers regularly engaged in the production of such products which are of equal material, design and workmanship. Products shall have been in satisfactory commercial or industrial use for 2 years prior to bid opening. The 2-year period shall include applications of equipment and materials under similar circumstances and of similar size. The product shall have been on sale on the commercial market through advertisements,

manufacturers' catalogs, or brochures during the 2-year period. Where two or more items of the same class of equipment are required, these items shall be products of a single manufacturer; however, the component parts of the item need not be the products of the same manufacturer unless stated in this section.

1.5.7.1 Alternative Qualifications

Products having less than a 2-year field service record will be acceptable if the manufacturer has been regularly engaged in the design and production of high intensity discharge roadway and area luminaires for a minimum of 15 years. Products shall have been in satisfactory commercial or industrial use for 15 years prior to bid opening. The product shall have been on sale on the commercial market through advertisements, manufacturers' catalogs, or brochures during the 15-year period.

1.5.7.2 Material and Equipment Manufacturing Date

Products manufactured more than 1 year prior to date of delivery to site shall not be used, unless specified otherwise.

1.6 DELIVERY, STORAGE, AND HANDLING OF POLES

1.6.1 Concrete Poles

Do not store poles on ground. Support poles so they are at least one foot above ground level and growing vegetation.

1.7 WARRANTY

The equipment items shall be supported by service organizations which are reasonably convenient to the equipment installation in order to render satisfactory service to the equipment on a regular and emergency basis during the warranty period of the contract.

1.7.1 LED Luminaire Warranty

Provide Luminaire Useful Life Certificate.

The equipment items shall be supported by service organizations which are reasonably convenient to the equipment installation in order to render satisfactory service to the equipment on a regular and emergency basis during the warranty period of the contract.

a. Provide a written five year on-site replacement warranty for material, fixture finish, and workmanship. On-site replacement includes transportation, removal, and installation of new products.

    1. Finish warranty shall include warranty against failure and against substantial deterioration such as blistering, cracking, peeling, chalking, or fading.

    2. Material warranty shall include:

        (a) All power supply units (drivers).

        (b) Replacement when more than 10 percent of LED sources in any lightbar or subassembly(s) are defective or non-starting.

b. Warranty period must begin on date of beneficial occupancy. Contractor shall provide the Contracting Officer signed warranty certificates prior to final payment.

1.8 OPERATIONAL SERVICE

Coordinate with manufacturer for maintenance agreement . Collect information from the manufacturer about maintenance agreement options, and submit to Contracting Officer. Services shall reclaim materials for recycling and/or reuse. Services shall not deposit materials in landfills or burn reclaimed materials. Indicate procedures for compliance with regulations governing disposal of mercury. When such a service is not available, local recyclers shall be sought after to reclaim the materials.

PART 2 PRODUCTS

2.1 PRODUCT COORDINATION

Products and materials not considered to be luminaires, equipment or accessories are specified in Section 33 71 02 UNDERGROUND ELECTRICAL DISTRIBUTION, and Section 26 20 00 INTERIOR DISTRIBUTION SYSTEM. Luminaires and associated equipment and accessories for interior applications are specified in Section 26 51 00 INTERIOR LIGHTING.

2.2 LED LUMINAIRES

UL 1598, NEMA C82.77 and UL 8750. Provide luminaires as indicated in luminaire schedule and XL plates or details on project plans. Provide luminaires complete with light sources of quantity, type, and wattage indicated. All luminaires of the same type shall be provided by the same manufacturer.

2.2.1 General Requirements

a. LED luminaire housings shall be die cast or extruded aluminum.

b. LED luminaires shall be rated for operation within an ambient temperature range of minus 22 degrees F to 104 degrees F.

c. Luminaires shall be UL listed for wet locations per UL 1598.

d. LED luminaires shall produce a minimum efficacy as shown in the following table, tested per IES LM-79. Theoretical models of initial raw LED lumens per watt are not acceptable.

Application	Luminaire Efficacy in Lumens per Watt
Exterior Pole/Arm-Mounted Area and Roadway Luminaires	65
Exterior Wall-Mounted Area Luminaires	60

Bollards	35

e. Luminaires shall have IES distribution and NEMA field angle classifications as indicated in luminaire schedule on project plans per IES HB-10.

f. Housing finish shall be baked-on enamel, anodized, or baked-on powder coat paint. Finish shall be capable of surviving ASTM B117 salt fog environment testing for 2500 hours minimum without blistering or peeling.

g. Luminaires shall not exceed the following IES TM-15 Backlight, Uplight and Glare (B.U.G.) ratings:

   1. Maximum Backlight (B) rating shall be determined by lighting zone in which luminaire is placed.

   2. Maximum Uplight (U) rating shall be U0.

   3. Maximum Glare (G) rating shall be determined by lighting zone in which luminaire is placed.

h. Luminaires shall be fully assembled and electrically tested prior to shipment from factory.

i. The finish color shall be as indicated in the luminaire schedule or detail on the project plans.

j. Luminaire lenses shall be constructed of clear tempered glass or UV-resistant acrylic.

l. The wiring compartment on pole-mounted, street and area luminaires must be accessible without the use of hand tools to manipulate small screws, bolts, or hardware.

m. Incorporate modular electrical connections, and construct luminaires to allow replacement of all or any part of the optics, heat sinks, power supply units, ballasts, surge suppressors and other electrical components using only a simple tool, such as a manual or cordless electric screwdriver.

n. Luminaires shall have a nameplate bearing the manufacturer's name, address, model number, date of manufacture, and serial number securely affixed in a conspicuous place. The nameplate of the distributing agent will not be acceptable.

o. Roadway and area luminaires shall have an integral tilt adjustment of plus or minus 5 degrees to allow the unit to be leveled in accordance with ANSI C136.3.

p. Luminaire must pass 3G vibration testing in accordance with NEMA C136.31.

q. All factory electrical connections shall be made using crimp, locking, or latching style connectors. Twist-style wire nuts are not acceptable.

2.2.2 Luminaire Light Sources

2.2.2.1 LED Light Sources

a. Correlated Color Temperature (CCT) shall be in accordance with NEMA ANSLG C78.377:

   Nominal CCT: 4000 degrees K: 3985 plus or minus 275 degrees K

b. Color Rendering Index (CRI) shall be:

   Greater than or equal to 70 for 4000 degrees K light sources.

c. Color Consistency:

   Manufacturer shall utilize a maximum 4-step MacAdam ellipse binning tolerance for color consistency of LEDs used in luminaires.

2.2.3 Luminaire Power Supply Units (Drivers)

2.2.3.1 LED Power Supply Units (Drivers)

UL 1310. LED Power Supply Units (Drivers) shall meet the following requirements:

a. Minimum efficiency shall be 85 percent.

b. Drive current to each individual LED shall not exceed 600 mA, plus or minus 10 percent.

c. Shall be rated to operate between ambient temperatures of minus 22 degrees F and 104 degrees F 122 degrees F.

d. Shall be designed to operate on the voltage system to which they are connected, typically ranging from 120 V to 480 V nominal.

e. Operating frequency shall be: 50 or 60 Hz.

f. Power Factor (PF) shall be greater than or equal to 0.90.

g. Total Harmonic Distortion (THD) current shall be less than or equal to 20 percent.

h. Shall meet requirements of 47 CFR 15, Class B.

i. Shall be RoHS-compliant.

j. Shall be mounted integral to luminaire. Remote mounting of power supply is not allowed.

k. Power supplies in luminaires mounted under a covered structure, such as a canopy, or where otherwise appropriate shall be UL listed with a sound rating of A.

m. Shall be equipped with over-temperature protection circuit that turns light source off until normal operating temperature is achieved.

2.2.4 LED Luminaire Surge Protection

Provide surge protection integral to luminaire to meet C Low waveforms as defined by IEEE C62.41.2, Scenario 1, Location Category C.

2.3 EXTERIOR LUMINAIRE CONTROLS

Controls shall comply with Section 9 of ASHRAE 90.1 - IP . Provide a control system interface within each luminaire that is compatible with the energy management or control system used by the utility department in charge of the project area for control of site lighting.

2.3.1 Photocell

UL 773 or UL 773A. Photocells shall be hermetically sealed, silicon diode light sensor type, rated at 120 volts for P1481 and 277 volts for P1482, 50/60 Hz with single-pole, single-throw contacts. Photocell shall be designed to fail to the ON position. Housing shall be constructed of polycarbonate , rated to operate within a temperature range of minus 40 to 158 degrees F. Photocell shall have a 1/2 in threaded base for mounting to a junction box or conduit. Provide swivel base type housing. Photocell shall turn on at 1-3 footcandles and turn off at 3 to 15 footcandles. A time delay shall prevent accidental switching from transient light sources. Provide a directional lens in front of the cell to prevent fixed light sources from creating a turnoff condition.

2.3.2 Motion Sensor

NEMA WD 7, UL 773A. Provide passive infrared type sensors with 270 degree coverage, time delay that can be adjusted from 15 seconds to 15 minutes, and "fail to ON position" default state. Sensors shall be located to achieve coverage of areas as indicated on project plans. Coverage patterns shall be derated as recommended by manufacturer based on mounting height of sensor and any obstructions such as trees. Do not use gross rated coverage in manufacturer's product literature. Sensors installed integral to the luminaire must be provided by the luminaire manufacturer. Sensors shall have an integral light level sensor that does not allow luminaires to operate during daylight hours and shall be designed to operate on a voltage of 120/277 VAC. Provide sensors to operate in conjunction with bi-level controllers that lower HID or LED luminaires to a 50 percent output. Sensor shall be mounted directly to luminaire.

2.4 POLES

Provide poles designed for wind loading of 130 miles per hour determined in accordance with AASHTO LTS while supporting luminaires and all other appurtenances indicated. The effective projected areas of luminaires and appurtenances used in calculations shall be specific for the actual products provided on each pole. Poles shall be embedded-base type designed for use with underground supply conductors. Poles shall have oval-shaped handhole having a minimum clear opening of 2.5 by 5 inches. Handhole cover shall be secured by stainless steel captive screws. Scratched, stained, chipped, or dented poles shall not be installed.

2.4.1 Concrete Poles

Provide concrete poles conforming to ASTM C1089. Cross-sectional shape shall be round.

2.4.1.1 Steel Reinforcing

Prestressed concrete pole shafts shall be reinforced with steel prestressing members. Design shall provide internal longitudinal loading by either pretensioning or post tensioning of longitudinal reinforcing members.

2.4.1.2 Tensioned Reinforcing

Primary reinforcement steel used for a prestressed concrete pole shaft shall be tensioned between 60 to 70 percent of its ultimate strength. The amount of reinforcement shall be such that when reinforcement is tensioned to 70 percent of its ultimate strength, the total resultant tensile force does not exceed the minimum section compressive strength of the concrete.

2.4.1.3 Coating and Sleeves for Reinforcing Members

Where minimum internal coverage cannot be maintained next to required core openings, such as handhole and wiring inlet, reinforcing shall be protected with a vaporproof noncorrosive sleeve over the length without the 1/2 inch concrete coverage. Each steel reinforcing member which is to be post-tensioned shall have a nonmigrating slipper coating applied prior to the addition of concrete to ensure uniformity of stress throughout the length of such member.

2.4.1.4 Strength Requirement

As an exception to the requirements of ASTM C1089, poles shall be naturally cured to achieve a 28-day compressive strength of 7000 psi. Poles shall not be subjected to severe temperature changes during the curing period.

2.4.1.5 Shaft Preparation

Completed prestressed concrete pole shaft shall have a hard, smooth, nonporous surface that is resistant to soil acids, road salts, and attacks of water and frost, and shall be clean, smooth, and free of surface voids and internal honeycombing. Poles shall not be installed for at least 15 days after manufacture.

2.5 BRACKETS AND SUPPORTS

ANSI C136.3, ANSI C136.13, and ANSI C136.21, as applicable. Pole brackets shall be not less than 1 1/4 inch galvanized steel pipe secured to pole. Slip-fitter or pipe-threaded brackets may be used, but brackets shall be coordinated to luminaires provided, and brackets for use with one type of luminaire shall be identical. Brackets for pole-mounted street lights shall correctly position luminaire no lower than mounting height indicated. Special mountings or brackets shall be as indicated and shall be of metal which will not promote galvanic reaction with luminaire head.

2.6 EQUIPMENT IDENTIFICATION

2.6.1 Manufacturer's Nameplate

Each item of equipment shall have a nameplate bearing the manufacturer's name, address, model number, and serial number securely affixed in a conspicuous place; the nameplate of the distributing agent will not be acceptable.

2.6.2 Labels

Provide labeled luminaires in accordance with UL 1598 requirements. Luminaires shall be clearly marked for operation of specific light sources and ballasts according to proper light source type. The following light source characteristics shall be noted in the format "Use Only _____":

a. Correlated color temperature (CCT) and color rendering index (CRI) for all luminaires.

Markings related to lamp type shall be clear and located to be readily visible to service personnel, but unseen from normal viewing angles when lamps are in place.

2.7 FACTORY APPLIED FINISH

Electrical equipment shall have factory-applied painting systems which shall, as a minimum, meet the requirements of NEMA 250 corrosion-resistance test.

PART 3 EXECUTION

3.1 INSTALLATION

Electrical installations shall conform to IEEE C2, NFPA 70, and to the requirements specified herein.

3.1.1 Concrete Poles

Install according to pole manufacturer's instructions.

3.1.2 Pole Setting

Poles in straight runs shall be in a straight line. Dig holes large enough to permit the proper use of tampers to the full depth of the hole. Place backfill in the hole in 6 inch maximum layers and thoroughly tamp. Place surplus earth around the pole in a conical shape and pack tightly to drain water away.

3.1.3 Photocell Switch Aiming

Aim switch according to manufacturer's recommendations. Set adjustable window slide for recommended photocell turn-on.

3.1.4 GROUNDING

Ground noncurrent-carrying parts of equipment including luminaires, mounting arms, brackets, and metallic enclosures as specified in Section 33 71 02 UNDERGROUND ELECTRICAL DISTRIBUTION. Where copper grounding conductor is connected to a metal other than copper, provide specially treated or lined connectors suitable for this purpose.

3.1.5 FIELD APPLIED PAINTING

Paint electrical equipment as required to match finish of adjacent surfaces or to meet the indicated or specified safety criteria. Painting

shall be as specified in Section 09 90 00 PAINTS AND COATINGS.

3.2 FIELD QUALITY CONTROL

Upon completion of installation, verify that equipment is properly installed, connected, and adjusted. Conduct an operating test after 100 hours of burn-in time to show that the equipment operates in accordance with the requirements of this section.

-- End of Section --

SECTION 27 10 00

BUILDING TELECOMMUNICATIONS CABLING SYSTEM
06/17

PART 1 GENERAL

1.1 REFERENCES

The publications listed below form a part of this specification to the extent referenced. The publications are referred to within the text by the basic designation only.

ASTM INTERNATIONAL (ASTM)

ASTM D709	(2016) Standard Specification for Laminated Thermosetting Materials

ELECTRONIC COMPONENTS INDUSTRY ASSOCIATION (ECIA)

ECIA EIA/ECA 310-E	(2005) Cabinets, Racks, Panels, and Associated Equipment

INSTITUTE OF ELECTRICAL AND ELECTRONICS ENGINEERS (IEEE)

IEEE 100	(2000; Archived) The Authoritative Dictionary of IEEE Standards Terms

INSULATED CABLE ENGINEERS ASSOCIATION (ICEA)

ICEA S-83-596	(2016) Indoor Optical Fiber Cables
ICEA S-90-661	(2012) Category 3, 5, & 5e Individually Unshielded Twisted Pair Indoor Cables for Use in General Purpose and LAN Communications Wiring Systems Technical Requirements

NATIONAL ELECTRICAL CONTRACTORS ASSOCIATION (NECA)

NECA/BICSI 568	(2006) Standard for Installing Building Telecommunications Cabling

NATIONAL ELECTRICAL MANUFACTURERS ASSOCIATION (NEMA)

ANSI/NEMA WC 66	(2013) Performance Standard for Category 6 and Category 7 100 Ohm Shielded and Unshielded Twisted Pairs

NATIONAL FIRE PROTECTION ASSOCIATION (NFPA)

NFPA 70	(2017) National Electrical Code

TELECOMMUNICATIONS INDUSTRY ASSOCIATION (TIA)

TIA-1152	(2009) Requirements for Field Test Instruments and Measurements for Balanced Twisted-Pair Cabling

TIA-455-21	(1988a; R 2012) FOTP-21 - Mating Durability of Fiber Optic Interconnecting Devices
TIA-492AAAA	(2009b) 62.5-um Core Diameter/125-um Cladding Diameter Class 1a Graded-Index Multimode Optical Fibers
TIA-526-14	(2015c) OFSTP-14A Optical Power Loss Measurements of Installed Multimode Fiber Cable Plant
TIA-526-7	(2015a) OFSTP-7 Measurement of Optical Power Loss of Installed Single-Mode Fiber Cable Plant
TIA-568-C.0	(2009; Add 1 2010; Add 2 2012) Generic Telecommunications Cabling for Customer Premises
TIA-568-C.1	(2009; Add 2 2011; Add 1 2012) Commercial Building Telecommunications Cabling Standard
TIA-568-C.2	(2009; Errata 2010; Add 2 2014; Add 1 2016) Balanced Twisted-Pair Telecommunications Cabling and Components Standards
TIA-568-C.3	(2008; Add 1 2011) Optical Fiber Cabling Components Standard
TIA-569	(2015d) Commercial Building Standard for Telecommunications Pathways and Spaces
TIA-570	(2012c) Residential Telecommunications Infrastructure Standard
TIA-606	(2012b; Add 1 2015) Administration Standard for the Telecommunications Infrastructure
TIA-607	(2011b) Generic Telecommunications Bonding and Grounding (Earthing) for Customer Premises
TIA/EIA-598	(2014d) Optical Fiber Cable Color Coding
TIA/EIA-604-3	(2004b; R 2014) Fiber Optic Connector Intermateability Standard (FOCIS), Type SC and SC-APC, FOCIS-3

U.S. FEDERAL COMMUNICATIONS COMMISSION (FCC)

FCC Part 68	Connection of Terminal Equipment to the Telephone Network (47 CFR 68)

UNDERWRITERS LABORATORIES (UL)

UL 1286	(2008; Reprint Feb 2015) Office Furnishings
UL 1666	(2007; Reprint Jun 2012) Test for Flame Propagation Height of Electrical and Optical-Fiber Cables Installed Vertically in Shafts
UL 444	(2008; Reprint Apr 2015) Communications Cables
UL 467	(2013) Grounding and Bonding Equipment
UL 50	(2015) UL Standard for Safety Enclosures for Electrical Equipment, Non-Environmental Considerations
UL 514C	(2014; Reprint Dec 2014) Nonmetallic Outlet Boxes, Flush-Device Boxes, and Covers
UL 969	(1995; Reprint Sep 2014) Standard for Marking and Labeling Systems

1.2 RELATED REQUIREMENTS

Section 01 33 00 SUBMITTAL PROCEDURES, Section 26 20 00 INTERIOR DISTRIBUTION SYSTEM and Section 33 82 00 TELECOMMUNICATIONS, OUTSIDE PLANT (OSP) apply to this section with additions and modifications specified herein.

Contact Camp Lejeune Base Telephone (aka Telecommunications Support Division or TSD)for special requirements on classified service cabling and color, unofficial service, under slab cabling, using water block, and any item not covered in this document.

Buildings with Special Network Requirements such as Classified networks, other government agencies (Navy NMCfI, Navy Medical, DLA, VA. Etc.), Marine Corps Community Services, Commercial ISP's, and CATV may require additional guidance outside this specification. Controlled or Restricted Access Areas may contain Classified networks may require Protected Distribution System which shall be installed in accordance with the current CNSSI No. 7003, UFGS27 05 29.00 10, and other restricted release publications. Classified networks may require shielded twisted pair, specific separation, distinct colored components, and shall be in accordance with current CNSSAM TEMPEST 1-13, RED/BLACK Separation documentation. In these cases contact Telecommunications Support Division G-6 MCIEAST-MCB CAMLEJ for additional guidance at (910) 451-9439 or (910) 451-3100.

Contact AHJ for special requirements on classified service, unofficial service, under slab cabling, using water block, and any item not covered in this document.

1.3 DEFINITIONS

Unless otherwise specified or indicated, electrical and electronics terms used in this specification shall be as defined in TIA-568-C.1, TIA-568-C.2, TIA-568-C.3, TIA-569, TIA-606 and IEEE 100 and herein.

1.3.1 Main Distribution Frame (MDF)

A physical structure at a central location for terminating permanent backbone cables to interconnect with service provider (SP) equipment at the activity minimum point of presence. The MDF generally includes vendor specific components to support voice and data circuits, building surge protector assemblies, main cross connect blocks, equipment support frames, and fire rated plywood backboard. Depending upon local site conditions, the MDF, and BDF and EF may be the same space.

1.3.2 Building Distribution Frame (BDF)

A structure with terminations for connecting backbone, campus, and horizontal cabling. The BDF generally includes a cross connect, equipment support frame or lockable terminal cabinet, cable supports, and fire rated plywood backboard. The BDF shall include building protector assemblies when used for campus backbone or SP cabling. Also known as a (BD).

1.3.3 Intermediate Distribution Frame (IDF)

An intermediate termination point for horizontal wiring and cross connections within telecommunications rooms. Shall be connected to MDF with both fiber and copper. Secure Internet Protocol (SIPR) vault or cabinet is considered an IDF.

1.3.4 Communications Room (CR) (telephone room TR or Distribution Room DR)

An enclosed space for telecommunications equipment, terminations, and cross connect wiring for horizontal cabling. Also known as (TR), (CR), and IT Room. Terms are used interchangeably in this section and are considered to have the same meaning.

1.3.5 Campus Distributor (CD)

A distributor from which the campus backbone cabling emanates. (International expression for main cross-connect (MC). Also known as Central Office (CO) or Area Distribution Node (ADN)).

1.3.6 Building Distributor (BD)

A distributor in which the building backbone (customer owned outside plant) cables terminate and at which connections to the campus backbone cables may be made. (International expression for intermediate cross-connect (IC).)

1.3.7 Floor Distributor (FD)

A distributor used to connect horizontal cable and cabling subsystems or equipment. (International expression for horizontal cross-connect (HC).)

1.3.8 Telecommunications Room (TR)

An enclosed space for housing telecommunications equipment, cable, terminations, and cross-connects. The room is the recognized cross-connect between the backbone cable and the horizontal cabling. Also known as a (CR), and IT Room.

1.3.9 Entrance Facility (EF) (Telecommunications) (can be same as the MDF)

An entrance to the building for both private and public network service cables (including wireless) including the entrance point at the building wall and continuing to the equipment room.

1.3.10 Equipment Room (ER) (Telecommunications) (can be same as communications room)

An environmentally controlled centralized space for telecommunications equipment that serves the occupants of a building. Equipment housed therein is considered distinct from a telecommunications room because of the nature of its complexity.

1.3.11 Open Cable

Cabling that is not run enclosed in a raceway as defined by NFPA 70. This refers to cabling that is "open" to the space in which the cable has been installed and is therefore exposed to the environmental conditions associated with that space, such as wire basket tray, cable tray, J-hooks, D-rings, or bridal rings. D rings should only be used in the communications room for cable management and J-hooks/bridal rings shall not be used.

1.3.12 Open Office

A floor space division provided by furniture, moveable partitions, or other means instead of by building walls, normally over 100 square feet.

1.3.13 Pathway

A physical infrastructure utilized for the placement and routing of telecommunications cable. Also known as raceway.

1.4 SYSTEM DESCRIPTION

The building telecommunications cabling and pathway system shall include permanently installed backbone and horizontal cabling, horizontal and backbone pathways, service entrance facilities, work area pathways, telecommunications outlet assemblies, conduit, raceway, and hardware for splicing, terminating, and interconnecting cabling necessary to transport telephone data, and other communications systems (including LAN A/V, intercom, PA, CATV, CCTV, and WiFi) between equipment items in a building. The horizontal system shall be wired in a star topology from the telecommunications work area to the floor distributor/IDF or building distributor/MDF or campus distributor or communications room at the center or hub of the star. The backbone cabling and pathway system includes intrabuilding and interbuilding interconnecting cabling, pathway, and terminal hardware. The intrabuilding backbone provides connectivity from the floor distributors to the building distributors or to the campus distributor and from the building distributors to the campus distributor as required. The backbone system shall be wired in a star topology with the campus distributor (Area Distribution Node) at the center or hub of the star. The interbuilding backbone system provides connectivity between the campus distributors and is specified in Section 33 82 00 TELECOMMUNICATIONS OUTSIDE PLANT (OSP). Provide telecommunications pathway systems referenced herein as specified in Section 26 20 00 INTERIOR DISTRIBUTION SYSTEM. The telecommunications contractor must coordinate with MCB CL Base Telephone (TSD) concerning access to and configuration of telecommunications spaces. The telecommunications

contractor may be required to coordinate work effort within the telecommunications spaces with the electrical sub and general contractor, ROICC and MCI East G-6 Telecommunications Support Division (TSD).

1.5 SUBMITTALS

Government approval is required for submittals with a "G" designation; submittals not having a "G" designation are for Contractor Quality Control approval. Submit the following in accordance with Section 01 33 00 SUBMITTAL PROCEDURES:

SD-02 Shop Drawings

Telecommunications drawings; G

Telecommunications Space Drawings; G

In addition to Section 01 33 00 SUBMITTAL PROCEDURES, provide shop drawings in accordance with paragraph SHOP DRAWINGS.

SD-03 Product Data

Telecommunications cabling (backbone and horizontal); G

Patch panels; G

Telecommunications outlet/connector assemblies; G

Equipment support frame; G

Connector blocks; G

Submittals shall include the manufacturer's name, trade name, place of manufacture, and catalog model or number. Include performance and characteristic curves. Submittals shall also include applicable federal, military, industry, and technical society publication references. Should manufacturer's data require supplemental information for clarification, the supplemental information shall be submitted as specified in paragraph REGULATORY REQUIREMENTS and as required in Section 01 33 00 SUBMITTAL PROCEDURES.

SD-06 Test Reports

Telecommunications cabling testing; G

SD-07 Certificates

Telecommunications Contractor Qualifications; G

Key Personnel Qualifications; G

Manufacturer Qualifications; G

Test plan; G

SD-09 Manufacturer's Field Reports

Factory reel tests; G

SD-10 Operation and Maintenance Data

Telecommunications cabling and pathway system Data Package 5; G

SD-11 Closeout Submittals

Record Documentation; G

1.5.1 Additional Submittal Requirements

All submittals of material, equipment and design must be approved by the Telecommunications Support Division (TSD) prior to installing any telecommunications wiring, equipment, or power to support communications.

1.6 QUALITY ASSURANCE

1.6.1 Shop Drawings

In exception to Section 01 33 00 SUBMITTAL PROCEDURES, submitted plan drawings shall be a minimum of 11 by 17 inches in size using a minimum scale of 1/8 inch per foot. Include wiring diagrams and installation details of equipment indicating proposed location, layout and arrangement, control panels, accessories, piping, ductwork, and other items that must be shown to ensure a coordinated installation. Wiring diagrams shall identify circuit terminals and indicate the internal wiring for each item of equipment and the interconnection between each item of equipment. Drawings shall indicate adequate clearance for operation, maintenance, and replacement of operating equipment devices. Submittals shall include the nameplate data, size, and capacity. Submittals shall also include applicable federal, military, industry, and technical society publication references.

1.6.1.1 Telecommunications Drawings

Provide registered communications distribution designer (RCDD) approved, drawings in accordance with TIA-606. The identifier for each termination and cable shall appear on the drawings. Drawings shall depict final telecommunications installed wiring system infrastructure in accordance with TIA-606. The drawings should provide details required to prove that the distribution system shall properly support connectivity from the EF telecommunications and ER telecommunications, CD's, BD's, and FD's to the telecommunications work area outlets. Provide a plastic laminated schematic of the as-installed telecommunications cable system showing cabling, CD's, BD's, FD's, and the EF and ER for telecommunications keyed to floor plans by room number. Mount the laminated schematic in the EF telecommunications space as directed by the Contracting Officer. The following drawings shall be provided as a minimum:

a. T1 - Layout of complete building per floor - Building Area/Serving Zone Boundaries, Backbone Systems, and Horizontal Pathways. Layout of complete building per floor. The drawing indicates location of building areas, serving zones, vertical backbone diagrams, telecommunications rooms, access points, pathways, grounding system, and other systems that need to be viewed from the complete building perspective.

b. T2 - Serving Zones/Building Area Drawings - Drop Locations and Cable Identification (ID’S). Shows a building area or serving zone. These

drawings show drop locations, telecommunications rooms, dedicated electrical, access points and detail call outs for common equipment rooms and other congested areas.

c. T4 - Typical Detail Drawings - Faceplate Labeling, Firestopping, Americans with Disabilities Act (ADA), Safety, Department of Transportation (DOT). Detailed drawings of symbols and typicals such as faceplate labeling, faceplate types, faceplate population installation procedures, detail racking, and raceways.

1.6.1.2 Telecommunications Space Drawings

Provide T3 drawings in accordance with TIA-606 that include telecommunications rooms plan views, pathway layout (cable tray, racks, ladder-racks, etc.), mechanical/electrical layout, and cabinet, rack, backboard and wall elevations. Drawings shall show layout of applicable equipment including incoming cable stub or connector blocks, building protector assembly, outgoing cable connector blocks, mechanical/electrical, patch panels and equipment spaces and cabinet/racks. Drawings shall include a complete list of equipment and material, equipment rack details, proposed layout and anchorage of equipment and appurtenances, and equipment relationship to other parts of the work including clearance for maintenance and operation. Drawings may also be an enlargement of a congested area of T1 or T2 drawings.

1.6.2 Telecommunications Contractor Qualifications

Work under this section shall be performed by and the equipment shall be provided by the approved telecommunications contractor and key personnel. Qualifications shall be provided for: the telecommunications system contractor, the telecommunications system installer, and the supervisor (if different from the installer). A minimum of 30 days prior to installation, submit documentation of the experience of the telecommunications contractor and of the key personnel.

1.6.2.1 Telecommunications Contractor

The telecommunications contractor shall be a firm which is regularly and professionally engaged in the business of the applications, installation, and testing of the specified telecommunications systems and equipment. The telecommunications contractor shall demonstrate experience in providing successful telecommunications systems within the past 3 years of similar scope and size. Submit documentation for a minimum of three and a maximum of five successful telecommunication system installations for the telecommunications contractor. Also IAW Section on QC Specialists; a Telecommunications Systems QC Specialist may be required on site, full time with 10 years minimum experience in telecom installation and experience. Specialist shall be very familiar with UFGS Divisions 27, 28, 33 concerning communications systems work and installation.

1.6.2.2 Key Personnel

Provide key personnel who are regularly and professionally engaged in the business of the application, installation and testing of the specified telecommunications systems and equipment. There may be one key person or more key persons proposed for this solicitation depending upon how many of the key roles each has successfully provided. Each of the key personnel shall demonstrate experience in providing successful telecommunications systems within the past 3 years.

Supervisors and installers assigned to the installation of this system or any of its components shall be Building Industry Consulting Services International (BICSI) Registered Cabling Installers, Technician Level. Submit documentation of current BICSI certification for each of the key personnel.

In lieu of BICSI certification, supervisors and installers assigned to the installation of this system or any of its components shall have a minimum of 3 years experience in the installation of the specified copper and fiber optic cable and components. They shall have factory or factory approved certification from each equipment manufacturer indicating that they are qualified to install and test the provided products. Submit documentation for a minimum of three and a maximum of five successful telecommunication system installations for each of the key personnel. Documentation for each key person shall include at least two successful system installations provided that are equivalent in system size and in construction complexity to the telecommunications system proposed for this solicitation. Include specific experience in installing and testing telecommunications systems and provide the names and locations of at least two project installations successfully completed using optical fiber and copper telecommunications cabling systems. All of the existing telecommunications system installations offered by the key persons as successful experience shall have been in successful full-time service for at least 18 months prior to the issuance date for this solicitation. Provide the name and role of the key person, the title, location, and completed installation date of the referenced project, the referenced project owner point of contact information including name, organization, title, and telephone number, and generally, the referenced project description including system size and construction complexity.

Indicate that all key persons are currently employed by the telecommunications contractor, or have a commitment to the telecommunications contractor to work on this project. All key persons shall be employed by the telecommunications contractor at the date of issuance of this solicitation, or if not, have a commitment to the telecommunications contractor to work on this project by the date that the bid was due to the Contracting Officer.

Note that only the key personnel approved by the Contracting Officer in the successful proposal shall do work on this solicitation's telecommunications system. Key personnel shall function in the same roles in this contract, as they functioned in the offered successful experience. Any substitutions for the telecommunications contractor's key personnel requires approval from The Contracting Officer.

1.6.2.3 Minimum Manufacturer Qualifications

Cabling, equipment and hardware manufacturers shall have a minimum of 3 years experience in the manufacturing, assembly, and factory testing of components which comply with TIA-568-C.1, TIA-568-C.2 and TIA-568-C.3.

1.6.3 Test Plan

Provide a complete and detailed test plan for the telecommunications cabling system including a complete list of test equipment for the components and accessories for each cable type specified, 60 days prior to the proposed test date. Include procedures for certification, validation, sample report, and testing.

1.6.4 Regulatory Requirements

In each of the publications referred to herein, consider the advisory provisions to be mandatory, as though the word, "shall" had been substituted for "should" wherever it appears. Interpret references in these publications to the "authority having jurisdiction," or words of similar meaning, to mean the Contracting Officer. Equipment, materials, installation, and workmanship shall be in accordance with the mandatory and advisory provisions of NFPA 70, manufacturer recommendations/installation manual, best known industry practices, and industry standards, unless more stringent requirements are specified or indicated.

1.6.5 Standard Products

Provide materials and equipment that are products of manufacturers regularly engaged in the production of such products which are of equal material, design and workmanship. Products shall have been in satisfactory commercial or industrial use for 2 years prior to bid opening. The 2-year period shall include applications of equipment and materials under similar circumstances and of similar size. The product shall have been on sale on the commercial market through advertisements, manufacturers' catalogs, or brochures during the 2-year period. Where two or more items of the same class of equipment are required, these items shall be products of a single manufacturer; however, the component parts of the item need not be the products of the same manufacturer unless stated in this section. Modification of manufacturer's standard products such as painting faceplates is not authorized.

1.6.5.1 Alternative Qualifications

Products having less than a 2-year field service record will be acceptable if a certified record of satisfactory field operation for not less than 6000 hours, exclusive of the manufacturers' factory or laboratory tests, is furnished.

1.6.5.2 Material and Equipment Manufacturing Date

Products manufactured more than 1 year prior to date of delivery to site shall not be used, unless specified otherwise.

1.7 DELIVERY AND STORAGE

Provide protection from weather, moisture, extreme heat and cold, dirt, dust, and other contaminants for telecommunications cabling and equipment placed in storage.

1.8 ENVIRONMENTAL REQUIREMENTS

Connecting hardware shall be rated for operation under ambient conditions of 0 to 60 degrees C 32 to 140 degrees F and in the range of 0 to 95 percent relative humidity, noncondensing. All telecommunications spaces shall follow TIA-569 design.

1.9 WARRANTY

The equipment items shall be supported by service organizations which are reasonably convenient to the equipment installation in order to render

satisfactory service to the equipment on a regular and emergency basis during the warranty period of the contract.

1.10 MAINTENANCE

1.10.1 Operation and Maintenance Manuals

Commercial off the shelf manuals shall be furnished for operation, installation, configuration, and maintenance of products provided as a part of the telecommunications cabling and pathway system, Data Package 5. Submit operations and maintenance data in accordance with Section 01 78 23 OPERATION AND MAINTENANCE DATA and as specified herein not later than 2 months prior to the date of beneficial occupancy. In addition to requirements of Data Package 5, include the requirements of paragraphs TELECOMMUNICATIONS DRAWINGS, TELECOMMUNICATIONS SPACE DRAWINGS, and RECORD DOCUMENTATION. Ensure that these drawings and documents depict the as-built configuration. Also provide copies of all telecommunications manuals to TSD.

1.10.2 Record Documentation

Provide T5 drawings including documentation on cables and termination hardware in accordance with TIA-606. T5 drawings shall include schedules to show information for cut-overs and cable plant management, patch panel layouts and cover plate assignments, cross-connect information and connecting terminal layout as a minimum. T5 drawings shall be provided in hard copy format and on electronic media (PDF and AutoCAD 2016 format). Provide the following T5 drawing documentation as a minimum:

a. Cables - A record of installed cable shall be provided in accordance with TIA-606. The cable records shall include only the required data fields in accordance with TIA-606. Include manufacture date of cable with submittal.

b. Termination Hardware - A record of installed patch panels, cross-connect points, distribution frames, terminating block arrangements and type, and outlets shall be provided in accordance with TIA-606. Documentation shall include the required data fields as a minimum in accordance with TIA-606.

PART 2 PRODUCTS

2.1 COMPONENTS

Components shall be UL or third party certified. Where equipment or materials are specified to conform to industry and technical society reference standards of the organizations, submit proof of such compliance. The label or listing by the specified organization will be acceptable evidence of compliance. In lieu of the label or listing, submit a certificate from an independent testing organization, competent to perform testing, and approved by the Contracting Officer. The certificate shall state that the item has been tested in accordance with the specified organization's test methods and that the item complies with the specified organization's reference standard. Provide a complete system of telecommunications cabling and pathway components using star topology. Provide support structures and pathways, complete with outlets, cables, connecting hardware and telecommunications cabinets/racks. Cabling and interconnecting hardware and components for telecommunications systems shall be UL listed or third party independent testing laboratory

certified, and shall comply with NFPA 70 and conform to the requirements specified herein.

2.2 TELECOMMUNICATIONS PATHWAY

Provide telecommunications pathways in accordance with TIA-569 and as specified in Section 26 20 00 INTERIOR DISTRIBUTION SYSTEM. Provide system furniture pathways in accordance with UL 1286.

2.2.1 Pathways Aboard Camp Lejeune Greater Area, Including MCAS New River

Pathway shall be conduit, cable tray, or modular access flooring that provides protection for cabling. Under floor duct, free laying and wireway shall not be used. Cantilever-type center hung tray or Poke-Thru devices shall not be used. J-hooks/D-rings/bridal rings and other open face type cable pathways are not authorized except in minor renovations or to continue like existing system. Provide grounding and bonding as required by TIA-607. Cable tray wiring shall comply with NFPA 70. All conduits entering the communications room shall be grouped and consolidated. Conduits can be "Home Run" or stubbed to cable tray using approved pull boxes after every 180 degrees of bends or every 100 feet. All homerun conduits shall have insulated bonding bushings in the TR, and shall extend down from the ceiling to within 3 to 4 inches of the ladder rack, or 3 to 6 inches onto the backboard, and shall be bonded to the TMGB or TGB by a minimum 6 AWG green sheathed, copper stranded bonding conductor. All penetrations will be sealed in accordance with code (fire-stopping). A minimum of two 3 inch conduits overhead will be installed between the main communications room and other communication rooms (IDFs); if installed below slab they are considered OSP and will have a minimum of three 4-inch pathways; refer to Section 33 82 00 TELECOMMUNICATIONS, OUTSIDE PLANT (OSP). Distribution Enclosures shall not be used as a pull box and will only be approved for their intended use.

2.2.2 Work area Pathways

Comply with TIA-569, except minimum 1 1/4 inch diameter conduit shall be used. System furniture pathways shall comply with UL 1286. In system furniture that blocks access to or is distant from the communications wall outlets, each system furniture desk/cubical shall be equipped with listed manufacturer telecommunication raceway and outlets. All system furniture outlets shall be extended from a consolidation point (CP) to the system furniture outlet locations, and shall comply with TIA-568-C.1 through TIA-568-C.3. When office reconfiguration will be frequent, a multi-user terminal outlet assembly (MUTOA) may be used in lieu of a CP.

2.2.3 Pull Boxes

Pull boxes shall be constructed of galvanized sheet steel with screw-fastened covers. Size pull boxes per TIA-569, except a 5 inches wide by 5 inches in length by 2 7/8 inches deep telecommunications box may be used for individual 1 1/4 inch diameter conduit runs. Provide pull boxes where length of conduit exceeds 100 feet or where more than 180 degree of cumulative bends occur. Align conduit ends on opposite sides of pull boxes as a straight pull through. Provide pull boxes in straight lengths of conduit only; direction changes in pull boxes are authorized. Electrical pull points, LC, LB, condulets, distribution enclosures, and splice boxes, are not pull boxes and are not authorized.

2.2.4 Consolidation Points

Consolidation Points (CP) shall be used when system furniture will be installed. CP's shall not support more than 12 work areas. CP's shall be centrally located permanent area, near the work area served, fully accessible, and should be located at least 50 feet from the FD when used for balanced twisted pair cabling. CP's shall be installed per TIA-569, except a S210 interface is required.

2.3 TELECOMMUNICATIONS OUTLET BOXES

Communications outlet boxes shall be placed in all work areas and any areas that can be converted to work areas. Work areas shall have an outlet connection within 6 feet' . Recommended practice is 6" to the left or right of (the outside edge of) each electrical outlet box in workable office areas or any area that could be converted into workable office area such as a large storage closet. Conference rooms should have one floor box and one box just above the ceiling. All administrative areas shall have a minimum of one ceiling mounted outlet box every 5,000 square feet of open administrative space for wireless LAN deployment. Additional boxes may be required where building composition prohibits wireless LAN coverage.Boxes shall be standard type 5 inches square by 2-7/8 inches deep with 1-1/4 inch diameter knock-outs, with a double gang to single gang reducer ring. Mount flush on finished walls/ceilings or just above ceiling tile for grid ceilings, height indicated by drawings. Outlet boxes for wall-mounted telephones shall be mounted at ADA required height. Outlet boxes for work counter area shall be mounted at a height 48 inches above finished floor, or other appropriate height as required. Install outlet boxes for security cameras, televisions, wall monitors, etc. at height indicated in drawings. Outlet boxes installed in floor shall be communications floor boxes large enough to support a surge of users with proper cable protection and ports that are in multiples of 4 and not parallel to the floor. For raised access flooring, boxes shall be below the floor with an access cover flush with the floor. Tombstones or boxes below floor that require removal of the floor panels to access are not allowed. Floor boxes and under slab cabling should not be used on the first floor or in wet areas; tele electric poles or furniture managed pathways fed from above the wet area should be used. Multi-user Telecommunications Outlet Assembly i.e. Multi-User Terminal Outlet Assemblies (MUTOA) should be placed where best suited for open office spaces may be frequently reconfigured.

2.4 TELECOMMUNICATIONS CABLING

Cabling shall be UL listed for the application and shall comply with TIA-568-C.0, TIA-568-C.1, TIA-568-C.2, TIA-568-C.3 and NFPA 70. Provide a labeling system in accordance with the manufacturer and local AHJ guidance for cabling as required by TIA-606 and UL 969. Confirm labeling is compatible with Camp Lejeune requirements. Ship cable on reels or in boxes bearing manufacture date for unshielded/shielded twisted pair (UTP/STP) in accordance with ICEA S-90-661 and optical fiber cables in accordance with ICEA S-83-596 for all cable used on this project. Cabling manufactured more than 12 months prior to date of installation shall not be used.

2.4.1 Backbone Cabling

2.4.1.1 Backbone Copper

Copper backbone and riser cable shall be solid conductor, 24 AWG, 100 ohm, 25 to 100 -pair, Category 3, UTP, in accordance with ICEA S-90-661, TIA-568-C.1, TIA-568-C.2 and UL 444, formed into 25 pair binder groups covered with a gray thermoplastic jacket and overall metallic shield if required for additional protection. Cable shall be imprinted with manufacturers name or identifier, flammability rating, gauge of conductor, transmission performance rating (category designation) at regular length marking intervals in accordance with ICEA S-90-661. Sufficient pair count of CAT 3 or 5, as required shall be installed between the MDF and each of the IDF's. Provide plenum (CMP), riser (CMR), or non-jell filled indoor/outdoor communications rated cabling in accordance with NFPA 70. Substitution of a higher rated cable shall be permitted in accordance with NFPA 70. If under slab it is considered Outside Plant shall be installed per Section 33 82 00 TELECOMMUNICATIONS, OUTSIDE PLANT (OSP) with proper surge protection at both ends.

2.4.1.2 Backbone Optical Fiber

Provide in accordance with ICEA S-83-596, TIA-568-C.3, UL 1666 and NFPA 70. Cable shall be imprinted with fiber count, fiber type and aggregate length at regular intervals not to exceed 40 inches.

Provide the number of strands indicated, (but not less than 12 strands between the main telecommunication room and each of the other telecommunication rooms or secure racks), of single-mode(OS1), tight buffered fiber optic cable.

Provide tight buffered fiber optic multimode, 62.5/125-um diameter(OM1) cable, conforming to TIA-492AAAA as indicated (but not less than 12 strands of multimode between the main communication room and each of the other communications rooms and secure racks).

Provide plenum (OFNP), riser (OFNR), or general purpose (OFN or OFNG) rated non-conductive, fiber optic cable in accordance with NFPA 70. Substitution of a higher rated cable shall be permitted in accordance with NFPA 70. The cable cordage jacket, fiber, unit, and group color shall be in accordance with TIA/EIA-598.

Provide plenum (OFNP), riser (OFNR), or general purpose (OFN or OFNG) rated non-conductive, fiber optic cable in accordance with NFPA 70. Substitution of a higher rated cable shall be permitted in accordance with NFPA 70. The cable cordage jacket, fiber, unit, and group color shall be in accordance with TIA/EIA-598.

2.4.2 Horizontal Cabling

Provide horizontal cable in compliance with NFPA 70 and performance characteristics in accordance with TIA-568-C.1.

2.4.2.1 Horizontal Copper

Provide a minimum of four horizontal copper cables to each work area outlet (faceplate), minimum size 24 AWG conductors, 100 ohm, Category 6 or 6A, with green thermoplastic jacket for all unclassified outlets (color and cable type for classified services shall be in accordance with current CNSSAM TEMPEST RED/BLACK Installation documentation including Table 1 below) in accordance with TIA-568-C.2, UL 444, ANSI/NEMA WC 66, ICEA S-90-661. Cable shall be imprinted with manufacturers name or identifier, flammability rating, gauge of conductor, transmission

performance rating (category designation) and length marking at regular intervals in accordance with ICEA S-90-661. Provide plenum (CMP), riser (CMR), or general purpose (CM or CMG) communications rated cabling in accordance with NFPA 70. Substitution of a higher rated cable shall be permitted in accordance with NFPA 70. Cables installed in conduit within and under slabs are not recommended but can be used if approved by local AHJ and shall be UL listed and labeled for wet locations in accordance with NFPA 70. Contact AHJ for special requirements on classified service, unofficial service, under slab cabling, using water block, and any item not covered in this document.
Communications CAT 6 twisted pair shall have a minimum of 12 inches of available slack at the communications outlet boxes. Minimum manufacturer's bend radius for each type of cable shall be maintained. All communications work area outlet boxes should have 4 cables to a double gang box (no rough in or empty conduit for future use allowed).

Table 1 - (U/FOUO) Cable Color Scheme

Classification Level	Cable Color
Unclassified	Green
Collateral Confidential	Blue
Collateral Secret	Red
Collateral Top Secret	Orange
Special Category	Yellow

2.4.2.2 Horizontal Optical Fiber

Provide optical fiber horizontal cable in accordance with ICEA S-83-596 and TIA-568-C.3. Cable shall be tight buffered, multimode, 62.5.125-um diameter, OM1 or single-mode, 8/125-um diameter, OS1. Cable shall be imprinted with manufacturer, flammability rating and fiber count at regular intervals not to exceed 40 inches.

Provide plenum (OFNP), riser (OFNR), or general purpose (OFN or OFNG) rated non-conductive, fiber optic cable in accordance with NFPA 70. Substitution of a higher rated cable shall be permitted in accordance with NFPA 70. Cables installed in conduit within and under slabs shall be UL listed and labeled for wet locations in accordance with NFPA 70. The cable jacket shall be of single jacket construction with color coding of cordage jacket, fiber, unit, and group in accordance with TIA/EIA-598.

2.4.3 Work Area Cabling

2.4.3.1 Work Area Copper (Equipment Cables)

Provide work area copper cable in accordance with TIA-568-C.2, with a green thermoplastic jacket for unclassified services (classified color code shall be in accordance with current CNNSSAM TEMPEST RED/BLACK Installation documentation and Section 2.4.2.1 of this specification).

2.4.3.2 Work Area Optical Fiber

Provide optical work area cable in accordance with TIA-568-C.3.

2.5 TELECOMMUNICATIONS SPACES

Provide connecting hardware and termination equipment in the telecommunications entrance facility and telecommunication equipment rooms to facilitate installation as shown on design drawings for terminating and cross-connecting permanent cabling. Provide telecommunications interconnecting hardware color coding in accordance with TIA-606.

Space shall be a minimum 8' x 10' unless a local waiver is provided by the AHJ (authority having jurisdiction) which is the Telecommunications Support Division (TSD) aboard Camp Lejeune. Communications room could be much larger depending on building size, usable square footage served, and customer requirements. Communications rooms shall be centrally located unless there are multiple Communication rooms, and then each room should be centrally located within the area served. Communications Rooms shall not share or be on a wet wall. Generally, the space should be sized to approximately 1.1 percent of the area it serves. For example, a 10,000 sq feet (929 sq m) area should be served by a minimum of one 10 ft x 11 feet (3 m x 3.4 m) Communications room. Access to Rooms shall be from a common area such as a hallway and door shall swing out. Additional/Multiple communications rooms are required if the usable floor space to be served exceeds 10,000 square feet, or the cable length between the horizontal cross-connect and the communications outlet, including slack and vertical distance, exceeds 295 feet. Multiple communications rooms and IDFs shall be stacked and connected by a minimum of two way 3-inch conduits overhead. If under slab it is considered Outside Plant and 3 way 4" shall be used per Section 33 82 00 TELECOMMUNICATIONS, OUTSIDE PLANT (OSP) with proper surge protection at both ends. The minimum clear height in the room shall be 2.4 m (8 ft) without obstructions. The height between the finished floor and the lowest point of the ceiling should be a minimum of 3 m (10 ft) to accommodate overhead pathways. The flooring shall be sealed concrete to reduce dust and static electricity; no carpet or VCT tile. Two separate dedicated 20 amp electrical outlet will be installed above or behind but not attached to each communications equipment rack. Dedicated outlets and conduits shall be installed on the longest farthest wall from the door, same wall as the communications backboard. OSP conduits shall be to the far left of the communications backboard while facing it. There should not be an electrical panel within the communications room unless it serves only the room, and it should be located as close to the door as possible. The room requires a lockable door keyed or key padded to restrict access to MCIEAST-MCB G-6 personnel only. Room shall not have any windows or skylights. At least one wall, where the point of presence is located, and two adjacent walls should be covered with fire rated plywood backboard for mounting equipment; additional boards may be needed for mounting additional equipment. Light, as measured within the communications room, should be a minimum of 500 lx (50 foot-candles). Lighting design should seek to minimize shadows within the telecommunications room (minimum two light fixtures). Equipment not related to the support of the communications room (e.g., piping, ductwork, pneumatic tubing) shall not be installed in, pass through, or enter the telecommunications room. Equipment related to the support of the communications room (e.g., piping, ductwork, HVAC drains, dedicated power) shall be installed in support of the communications equipment and not pose a drip/moisture/trip hazard and be usable as intended.

2.5.1 Backboards

Provide void-free, interior grade A-C plywood 3/4 inch thick 4 by 8 feet as indicated. Backboards shall be fire rated by manufacturing process. Fire stamp shall be clearly visible. Backboards shall be provided on a minimum of one telecom wall, two adjacent walls, and anywhere mounting is needed in the telecommunication spaces.

2.5.2 Equipment Support Frame

Provide in accordance with ECIA EIA/ECA 310-E and UL 50. Steel construction shall be treated to resist corrosion.

a. Bracket, wall mounted (for buildings with very low jack/pair count and no secured electronic equipment requirement), 8 gauge aluminum minimum. Provide hinged bracket compatible with 19 inches panel mounting and must be in a secured communications room.

b. Racks, wall or floor mounted modular type, 16 gauge steel construction minimum, treated to resist corrosion. Provide rack with vertical and horizontal cable management channels, top and bottom cable troughs, grounding lug and a surge protected power strip with 6 duplex 20 amp receptacles. Racks shall be large enough to support all telephone/data equipment required plus 25 percent spare and shall have a maximum of 7' height. Rack shall be compatible with 19 inches panel mounting and must be in a secured communications room.

c. Cabinets, freestanding modular type, 16 gauge steel or 11 gauge aluminum construction minimum, treated to resist corrosion. Cabinet shall have removable and lockable side panels, front and rear doors, and have adjustable feet for leveling. All cabinets shall be keyed to current TSD key and large enough to support all telephone/data equipment required in the building plus 25% for future expansion. Dedicated electrical outlets should be installed within the cabinet. A backboard for mounting equipment is still needed when a cabinet is installed. Cabinet shall be mounted to the far right of the board to allow space for OSP cable, lightning protection, and bus bar to be installed on the board's far left. Dedicated power shall be within the cabinet on the backboard. Cabinet shall be vented in the roof and rear door. Cabinet shall have cable access in the roof and base and be compatible with 19 inches panel mounting. Provide cabinet with grounding bar, 550 CFM fan with filter and a surge protected power strip with 6 duplex 20 amp receptacles. All cabinets shall be keyed alike.

d. Cabinets, wall-mounted modular type, 16 gauge steel or 11 gauge aluminum construction minimum, treated to resist corrosion. Cabinet shall have have lockable front and rear doors, louvered side panels, 250 CFM fan, ground lug, and top and bottom cable access. Cabinets shall be no smaller than 24"W X 48"H X 30"D, shall be keyed to current TSD key, and large enough to support all telephone/data equipment required in the building plus 25% for future expansion. Dedicated electrical outlets should be installed within the cabinet. A backboard for mounting equipment is still needed when a cabinet is installed. Cabinet shall be mounted to the far right of the board to allow space for OSP cable, lightning protection, and bus bar to be installed on the board's far left. Cabinet shall be compatible with 19 inches panel mounting. All cabinets shall be keyed alike. A surge

protected power strip with 6 duplex 20 amp receptacles shall be provided within the cabinet.

2.5.3 Connector Blocks

Voice riser shall be terminated on angled insulation displacement connector (IDC), Type 110, 50 pair, 89D style mounted blocks, compatible with industry standard 110 blade punch down tool, designed for Category 3 and higher systems. Provide 50 pair blocks for the number of riser and backbone cables terminated plus 25 percent spare. Also provide sufficient blocks for cross connects for all IDFs. Blocks shall be mounted on an 89D style bracket on a frame, in rack or in cabinet.

2.5.4 Building Protector Assemblies

Building protector assembly is required on all OSP cables and shall have 710 type connector blocks for connection to the exterior cable at full capacity. M150-66 type IDC for connection to the voice cross connect blocks. 110 type IDC is not approved on building protector assembly. For Central office Area Distribution Nodes a R399 type central office protector shall be used.

2.5.5 Cable Guides

Provide cable guides specifically manufactured for the purpose of routing cables, wires and patch cords horizontally and vertically on 19 inches equipment racks, cabinets, and telecommunications backboards. Cable guides of ring or bracket type devices mounted on rack, cabinet, panels, and backboard for horizontal cable management and individually mounted for vertical cable management. Mount cable guides with screws, or nuts and lockwashers. Cable guides are not to be used outside of the communications room.

2.5.6 Patch Panels

Provide capacity for the number of horizontal and backbone cables terminated on the panel plus 25 percent spare. Provide factory terminated SC type SM optical fiber patch cables and factory terminated CAT 6 stranded copper patch cables for patch panels. Provide patch cords as complete assemblies of various appropriate lengths and with matching connectors and sheath color matched to network in Section 2.4.2.1. Provide fiber optic patch cables with crossover orientation in accordance with TIA-568-C.3. Patch cords shall meet minimum performance requirements specified in TIA-568-C.1, TIA-568-C.2 and TIA-568-C.3 for cables, cable length and hardware specified. Classified service may require shielded jack sets and panels as approved by AHJ.

2.5.6.1 Modular to 110 Block Patch Panel

Provide in accordance with TIA-568-C.1 and TIA-568-C.2. Panels shall be third party verified and shall comply with ANSI/TIA Category 6/6A requirements. Panel shall be constructed of 0.09 inches minimum aluminum and shall be cabinet/rack mounted and compatible with an ECIA EIA/ECA 310-E 19 inches equipment rack. Panel shall support connectors that comply with ANSI/TIA-568-C.2, Category 6 UTP requirements Connectors/Outlets shall be UL2043 listed, non-keyed, compatible with RJ-45 and RJ-11 plugs, glass-reinforced nylon housing, pass through mounting from the front or rear of the patch panel, with enclosed IDC termination and color-coded for both T568A and T568B wiring. Connectors shall be color matched to network

type in Section 2.4.2.1 unless specified otherwise and approved by AHJ Each outlet/connector shall be terminated T568A. The rear of each panel shall have incoming cable strain-relief and routing guides. DO NOT USE ZIP TIES ON STRAIN-RELIEF GUIDES. Panels shall have each port factory numbered and be equipped with laminated plastic nameplates above each port. Labeling shall comply with Section 3.2 of this specification.

2.5.6.2 Fiber Optic Patch Panel

Provide panel for maintenance and cross-connecting of optical fiber cables. Panel shall be constructed of 16 or 18 gauge steel or 11 gauge aluminum minimum and shall be cabinet/rack mounted and compatible with a ECIA EIA/ECA 310-E 19 inches equipment rack. Each panel shall provide multimode/single-mode adapters as required in duplex SC in accordance with TIA/EIA-604-3 with zirconia ceramic alignment sleeves. Provide dust cover for unused adapters. The rear of each panel shall have a cable management tray a minimum of 8 inches deep with removable cover, incoming cable strain-relief and routing guides. Panels shall have each adapter factory numbered and be equipped with laminated plastic nameplates above each adapter. When populating the panel working left to right start with OSP feed, SM ISO to IDF, MM ISO to IDF, lastly row to row within same comm room.

2.5.7 Optical Fiber Distribution Panel

Cabinet/rack mounted optical fiber distribution panel (OFDP) shall be constructed in accordance with ECIA EIA/ECA 310-E utilizing 16 or 18 gauge steel or 11 gauge aluminum minimum. Panel shall be divided into two sections, distribution and user. Distribution section shall have strain relief, routing guides, splice tray and shall be lockable. User section shall have a cover for patch cord protection. Each panel shall provide multimode and single-mode pigtails and adapters as required. Provide adapters as duplex SC with zirconia ceramic alignment sleeves. Provide dust covers for adapters. Provide patch cords as specified in the paragraph PATCH PANELS. When populating the panel working left to right start with OSP feed, SM ISO to IDF, MM ISO to IDF, lastly row to row within same communications room.

2.6 TELECOMMUNICATIONS OUTLET/CONNECTOR ASSEMBLIES

2.6.1 Outlet/Connector Copper

Outlet/connectors shall comply with FCC Part 68, TIA-568-C.1, and ANSI/TIA-568-C.2, Category 6 UTP requirements. Outlet/connectors shall be UL 2043 listed, non-keyed, compatible with RJ-45 and RJ-11 plugs, rated for 2500 plug mating cycles, glass-reinforced nylon housing, pass through mounting from the front or rear of the faceplate, with enclosed IDC termination and color-coded for both T568A and T568B wiring. Connectors shall be color matched to network type in Section 2.4.2.1 unless specified otherwise and approved by AHJ. Each outlet/connector shall be terminated 568A. UTP outlet/connectors installed in outdoor or marine environments shall be rated for the environmental conditions.

2.6.2 Optical Fiber Adapters(Couplers)

Provide optical fiber adapters suitable for duplex SC in Accordance with TIA/EIA-604-3 with zirconia ceramic alignment sleeves, as indicated. Provide dust cover for adapters. Optical fiber adapters shall comply with TIA-455-21 for 500 mating cycles.

2.6.3 Optical Fiber Connectors

Provide in accordance with TIA-455-21. Optical fiber connectors shall be duplex SC in accordance with TIA/EIA-604-3 with zirconia ceramic ferrule, epoxyless crimp style compatible with 62.5/125 multimode and 8/125 single-mode fiber. The connectors shall provide a maximum attenuation of 0.3 dB at 850/1300 and 1310/1550 nm with less than a 0.2 dB change after 500 mating cycles.

2.6.4 Cover Plates

Telecommunications cover plates shall comply with UL 514C, and TIA-568-C.1, TIA-568-C.2, ; flush or oversized design constructed of high impact thermoplastic material, color to match the network color designation in Section 2.4.2.1, or as otherwise specified in Section 26 20 00 INTERIOR DISTRIBUTION SYSTEM and authorized by the AHJ.. Provide labeling in accordance with the paragraph LABELING in this section. Additionally, outlet cover plate coloring shall be specified in design, and may be required to match the network color designation in Section 2.4.2.1 of this specification.

2.7 MULTI-USER TELECOMMUNICATIONS OUTLET ASSEMBLY (MUTOA)

Provide MUTOA(s) in accordance with TIA-568-C.1. Ensure proper separation from other networks and power.

For Modular Furniture, provide horizontal cabling from the MUTOA to an adaptor plate in the Modular Furniture. The MUTOA should be limited to serving a maximum of six work areas with 2 cables each for a total of 12 cables.

2.8 TERMINAL CABINETS

Construct of zinc-coated sheet steel, 36 by 24 by 6 inches deep, as indicated. Trim shall be fitted with hinged door and locking latch. Doors shall be maximum size openings to box interiors. Boxes shall be provided with 5/8 inch backboard with two-coat varnish finish. Match trim, hardware, doors, and finishes with panelboards. Provide label and identification systems for telecommunications wiring and components consistent with TIA-606.

2.9 GROUNDING AND BONDING PRODUCTS

Provide in accordance with UL 467, TIA-607, and NFPA 70. Components shall be identified as required by TIA-606. Provide ground rods, bonding conductors, and grounding busbars as specified in Section 26 20 00 INTERIOR DISTRIBUTION SYSTEM. The preferred ground for the Telephone Main Grounding Bus (TMGB) bar will be to the Main electrical Distribution Panel (MDP) bus bar and building steel. In most cases, but not all; a #6 AWG bonding conductor is recommended for telecommunications. All grounding and bonding conductors within the Telecommunications room will be green sheathed copper conductor, stranded, and labeled as suitable for use as such and tagged "DO NOT REMOVE". All grounding and bonding conductors running out of the Telecommunications room should be protected in conduit or attached to the outside of the cable tray and sized according to references. The minimum size of the TMGB shall be no smaller than 4" by 10" by 1/4 inch thick; bus bar should be factory made and factory drilled, not fabricated or drilled onsite. All bonding and grounding terminations

shall be irreversible and secured with a double hole crimp termination. Do not exceed minimum bend radius on bonding and grounding conductors. Mount Bus Bar to far left of telecomm backboard at approximately 70" AFF.

2.10 FIRESTOPPING MATERIAL

Provide as specified in Section 07 84 00 FIRESTOPPING.

2.11 MANUFACTURER'S NAMEPLATE

Each item of equipment shall have a nameplate bearing the manufacturer's name, address, model number, and serial number securely affixed in a conspicuous place; the nameplate of the distributing agent will not be acceptable.

2.12 FIELD FABRICATED NAMEPLATES

ASTM D709. Provide laminated plastic nameplates for each equipment enclosure, relay, switch, and device; as specified or as indicated on the drawings. Each nameplate inscription shall identify the function and, when applicable, the position. Nameplates shall be melamine plastic, 0.125 inches thick, white with black center core. Surface shall be matte finish. Corners shall be square. Accurately align lettering and engrave into the core. Minimum size of nameplates shall be one by 2.5 inches. Lettering shall be a minimum of 0.25 inches high normal block style.

2.13 TESTS, INSPECTIONS, AND VERIFICATIONS

2.13.1 Factory Reel Tests

Provide documentation of the testing and verification actions taken by manufacturer to confirm compliance with TIA-568-C.1, TIA-568-C.2, TIA-568-C.3, TIA-526-7 for single mode optical fiber, and TIA-526-14 for multimode optical fiber cables.

PART 3 EXECUTION

3.1 INSTALLATION

Install telecommunications cabling and pathway systems, including the horizontal and backbone cable, pathway systems, telecommunications outlet/connector assemblies, and associated hardware in accordance with NECA/BICSI 568, TIA-568-C.1, TIA-568-C.2, TIA-568-C.3, TIA-569, NFPA 70, manufacturer instructions, current industry best practices, and UL standards as applicable. Provide cabling in a star topology network. Provide residential cabling in a star wiring architecture from the distribution device as required by TIA-570. Pathways and outlet boxes shall be installed as specified in Section 26 20 00 INTERIOR DISTRIBUTION SYSTEM. Standard type 5" x 5" x 2 7/8" square box with a single gang plaster ring shall be used except in concrete or concrete masonry units where a standard 4 11/16" square or a floor box will be used. Mount flush in finished walls at height indicated by drawings and with proper clearances from other networks and power systems. Depth of boxes shall be large enough to allow manufacturer's recommended conductor bend radii, normally 2 7/8" depth. Install telecommunications cabling with copper media in accordance with the following criteria to avoid potential electromagnetic interference between power and telecommunications equipment. The interference ceiling shall not exceed 3.0 volts per meter measured over the usable bandwidth of the telecommunications cabling

(normal minimum clearance distances of 4 feet from motors, generators, frequency converters, transformers, x-ray equipment or uninterrupted power system, 300 mm (12 in) from power conduits and cable systems, 125 mm (5 inches) from fluorescent or high frequency lighting system fixtures). Cabling shall be run with horizontal and vertical cable guides in telecommunications spaces with terminating hardware and interconnection equipment.

3.1.1 Cabling

Install UTP/STP, and optical fiber telecommunications cabling system as detailed in TIA-568-C.1, TIA-568-C.2, TIA-568-C.3 and TIA-570 for residential cabling. Screw terminals shall not be used except where specifically indicated on plans. Use an approved insulation displacement connection (IDC) tool kit for copper cable terminations. Do not untwist Category 6 UTP cables more than ½" (12 mm) from the point of termination to maintain cable geometry. Provide service loop on each end of the cable, minimum 10' (3 meters) in the telecommunications room, 6" (150mm) in or close to the work area outlet for UTP. Do not exceed manufacturers' cable pull tensions for copper and optical fiber cables. Provide a device to monitor cable pull tensions. Do not exceed 25 pounds pull tension for four pair copper cables. Do not chafe or damage outer jacket materials. Use only lubricants approved by cable manufacturer. Do not over cinch cables, or crush cables with staples. Only hook and loop fasteners are allowed on Category 6/6A cable and optical fiber cable. DO NOT USE ZIP TIES. For UTP cable, bend radii shall not be less than four times the cable diameter. Cables shall be terminated; no cable shall contain unterminated elements (See NFPA 70 abandoned cabling). Cables shall not be spliced. Label cabling in accordance with paragraph LABELING in this section.

3.1.1.1 Open Cable

Use only where specifically indicated on plans or use in cable trays, or below raised floors in approved pathway (cable free laid on floor is not authorized). Install in accordance with TIA-568-C.1, TIA-568-C.2 and TIA-568-C.3. Do not exceed cable pull tensions recommended by the manufacturer. Copper cable not in a wireway or pathway shall be suspended a minimum of 8 inches above ceilings by cable supports no greater than 60 inches apart. Cable shall not be run through structural members or in contact with pipes, ducts, or other potentially damaging items. Placement of cable parallel to power conductors shall be avoided, if possible; a minimum separation of 12 inches shall be maintained when such placement cannot be avoided.

Plenum cable shall be used where open cables are routed through plenum areas. Cable routed exposed under raised floors shall be plenum rated. Plenum cables shall comply with flammability plenum requirements of NFPA 70. Install cabling after the flooring system has been installed in raised floor areas. Cable 6 feet long shall be neatly coiled not less than 12 inches in diameter below each feed point in raised floor areas.

3.1.1.2 Backbone Cable

a. Copper Backbone Cable. Install intrabuilding backbone copper cable, in minimum 2-way 3 inch overhead conduit or larger in indicated pathways, between the campus distributor, located in the telecommunications entrance facility or room, the building distributors and the floor distributors located in telecommunications

rooms and telecommunications equipment rooms as indicated on drawings.

b. Optical fiber Backbone Cable. Install intrabuilding backbone optical fiber in indicated pathways (normally in one of multiple inner ducts installed in conduit so as to maximize pathways). Do not exceed manufacturer's recommended bending radii and pull tension. Prepare cable for pulling by cutting outer jacket 10 inches leaving strength members exposed for approximately 10 inches. Twist strength members together and attach to pulling eye. Vertical cable support intervals shall be in accordance with manufacturer's recommendations.

3.1.1.3 Horizontal Cabling

Install horizontal cabling as indicated in the specification and on drawings. Do not untwist Category 6 UTP cables more than one half inch from the point of termination to maintain cable geometry. Provide slack cable in the form of a figure eight or large service loop on each end of the cable (prevent inductance caused by small coils), 10 feet in the telecommunications room, and 12 inches in the work area outlet.

3.1.2 Pathway Installations

Provide in accordance with TIA-569 and NFPA 70, except that 1 1/4 inch diameter conduit from cable tray or telecommunication room backboard to each work area outlet is required. Provide building pathway as specified in Section 26 20 00 INTERIOR DISTRIBUTION SYSTEM.

Conceal conduit within finished walls, ceilings, and floors (not in wet areas). Keep conduit minimum 12 inches away from parallel runs of electrical power equipment, flues, steam, light ballast, and hot water pipes. Install conduit parallel with or at right angles to ceilings, walls, and structural members where located above accessible ceilings and where conduit is visible after completion of project. Run conduits in crawl spaces as if exposed. Install no more than two 90 degree bends for a single horizontal cable run. All bends/turns in conduits will be in straight runs of conduit; a pull box shall be installed after every 180 degrees of bends or 100'; in no case will a turn be made within a pull box. The minimum size for a pull box for a single 1¼" conduit will be 5" long by 5" wide by 2 7/8" deep, and for a 3" conduit 30"W x 54"L x9"D. All conduits shll contain an insulated bushing at each end to protect the cable from damage and required bonding. Pull points, LC, LB, and condulets are not authorized.

Under floor cabling, under floor duct, and conduit under floor slabs should be avoided in the Camp Lejeune Greater area due to wet area close to coastal waters.

3.1.3 Service Entrance Conduit, Overhead

Provide service entrance overhead as specified in this section and Section 26 20 00 INTERIOR DISTRIBUTION SYSTEMS.

Ensure entrance fitting or weather head is sized to ensure min bend radius for largest cable is maintained.

3.1.4 Service Entrance Conduit, Underground

Provide service entrance underground as specified in this section and Section 26 20 00 INTERIOR DISTRIBUTION SYSTEM.

Underground portion shall be encased in minimum of 3 inches of concrete extending from the building entrance to OSP demarcation point and shall be a minimum of 18 inches below slab or grade. Location of entrance conduit in communications room shall be to the left of the longest furthest wall from the door.

3.1.5 Cable Tray Installation

Install cable tray as specified in Section 26 20 00 INTERIOR DISTRIBUTION SYSTEM. Only CMP and OFNP type cable shall be installed in a plenum.

A continuous stranded bonding conductor shall be run on the outside along the tray tapped to each section of tray with a listed connector to ensure bonding. Remove all sharps from cable tray and pathways. Ensure bonding is on the pathway so as not to obstruct horizontal cabling. Maintain proper clearance and work space per TIA-569 and TEMPEST.

3.1.6 Work Area Outlets

3.1.6.1 Terminations

Terminate UTP cable in accordance with TIA-568-C.1, TIA-568-C.2 and wiring configuration as specified. Terminate fiber optic cables in accordance with TIA-568-C.3.

All work areas will contain a minimum of two work area outlets . Any work area larger than 80 sq feet will require additional work area outlets to service any work location in the room within 6 feet of an electrical outlet. This also applies to any area that could be converted to work space in the future. Recommend one work area outlet box be placed 6" to the left or right of every electrical outlet in a usable space. All work area face plates shall contain four category 6 jacks as specified herein, terminated T568A configuration unless otherwise approved by AHJ. MUTOAs contain 12 cables and may require additional clearance and power. All other outlets shall contain a minimum of 2 Category six jacks, with the exception of single jack wall phone studded faceplates.

3.1.6.2 Cover Plates

As a minimum, each outlet/connector shall be labeled as to its function and a unique number to identify cable link in accordance with the paragraph LABELING in this section. (For secured networks contact AHJ as shielded twisted pair and color coded face plates may be necessary.)

3.1.6.3 Cables

Unshielded/shielded twisted pair and fiber optic cables shall have a minimum of 12 inches of available service slack loosely coiled into the telecommunications outlet boxes or in cable tray as close as possible to outlet box. Minimum manufacturer's bend radius for each type of cable shall not be exceeded.

3.1.6.4 Pull Cords

Pull cords shall be installed in conduit serving telecommunications outlets that do not have cable installed (this is not normal as all outlets should be cabled).

3.1.6.5 Multi-User Telecommunications Outlet Assembly (MUTOA)

Run horizontal cable per specifications and terminate cables in a MUTOA in each system furniture zone. MUTOAs shall not be located in ceiling spaces, or any obstructed area. MUTOAs shall not be installed in furniture unless that unit of furniture is permanently secured to the building structure. MUTOAs shall be located in an open work area so that each furniture cluster is served by at least one MUTOA. The MUTOA shall be limited to serving a maximum of six work areas with 2 cables each for a total of 12 cables/12 ports. Maximum work area cable length requirements shall also be taken into account. MUTOAs must be labeled to include the maximum length of work area cables. MUTOA labeling is in addition to the labeling described in TIA-606, or other applicable cabling administration standards. Work area cables extending from the MUTOA to the work area device must also be uniquely identified and labeled.

3.1.7 Telecommunications Space Termination

Install termination hardware required for Category 6 and optical fiber system. A single punch manufacture approved insulation displacement tool shall be used for terminating copper cable to insulation displacement connectors.

3.1.7.1 Connector Blocks

Connector blocks shall be cabinet/rack mounted, as approved by the AHJ, in orderly rows and columns. Adequate vertical and horizontal wire routing areas shall be provided between groups of blocks. Install in accordance with industry standard wire routing guides in accordance with TIA-569.

3.1.7.2 Patch Panels

Patch panels shall be mounted in equipment cabinets/racks with sufficient ports to accommodate the installed cable plant plus 25 percent spares.

a. Copper Patch Panel. Copper cable entering a patch panel shall be secured to a rear cable manager with hook and loop ties as recommended by the manufacturer to prevent movement of the cable.

b. Fiber Optic Patch Panel. Fiber optic cable loop shall be 3 feet in length provided as recommended by the manufacturer. The outer jacket of each cable entering a patch panel shall be secured to the panel to prevent movement of the fibers within the panel, using clamps or brackets specifically manufactured for that purpose.

3.1.7.3 Equipment Support Frames

Install in accordance with TIA-569:

a. Bracket, wall mounted. Mount bracket to right on plywood backboard in accordance with manufacturer's recommendations. Mount rack so height of highest panel does not exceed 78 inches above floor. Mount so there is sufficient space remaining on backboard to mount lightning protection, bonding, and cable managers or install additional backboards.

b. Racks, floor mounted modular type. Permanently anchor rack to the floor in accordance with manufacturer's recommendations. Install sections of ladder rack anchored to telephone rack/cabinet and at

least two walls.

c. Cabinets, freestanding modular type. Permanently anchor to the floor in accordance with manufacturer's recommendations. When cabinets are connected together, remove adjoining side panels for cable routing between cabinets. Mount rack mounted fan and 19" power/surge strip in cabinet. Install sections of ladder rack anchored to telephone rack/cabinet and at least two walls.

d. Cabinets, wall-mounted modular type. Mount cabinet to right on plywood backboard in accordance with manufacturer's recommendations. Mount cabinet so height of highest panel does not exceed 78 inches above floor. Mount so there is sufficient space remaining on backboard to mount lightning protection, bonding, and cable managers or install additional backboards.

3.1.8 Electrical Penetrations

Seal openings around electrical penetrations through fire resistance-rated wall, partitions, floors, or ceilings as specified in Section 07 84 00 FIRESTOPPING.

3.1.9 Grounding and Bonding

Provide in accordance with TIA-607, NFPA 70 and as specified in this section and Section 26 20 00 INTERIOR DISTRIBUTION SYSTEM except only two hole irreversible compression lugs will be accepted.

3.2 LABELING

3.2.1 Labels

Provide labeling in accordance with TIA-606 except jacks will be numbered in a logical, sequential, clockwise numbering system from 1 to X with a closet designator. Example would be 145 C 146, would be the 145th & 146th jacks from the C telecom room. All labels shall be numbered with manufacturer's labeling system (not fabricated) and be equipped with laminated plastic cover. All terminations that are not to work area outlets should be in the last patch panel locations and labeled accordingly i.e. DDC, FACP, Elevator, Wall phones, or Wireless access points.

3.2.2 Cable

Cables shall be labeled using color labels on both ends with identifiers in accordance with TIA-606.

3.2.3 Termination Hardware

Workstation outlets and patch panel connections shall be labeled using manufacturing labeling system, color coded labels with identifiers in accordance with this section and TIA-606. Coordinate with Base Telephone.

3.3 FIELD APPLIED PAINTING

Paint electrical equipment as required to match finish of adjacent surfaces or to meet the indicated or specified safety criteria. Painting shall be as specified in Section 09 90 00 PAINTS AND COATINGS.

3.3.1 Painting Backboards

Camp Lejeune no longer paints backboards as fire rated plywood is available. Manufactured fire retardant backboard shall be used, so as not to increase flame spread and smoke density and must be appropriately labeled.

3.4 FIELD FABRICATED NAMEPLATE MOUNTING

Provide number, location, and letter designation of nameplates as indicated. Fasten nameplates to the device with a minimum of two sheet-metal screws or two rivets.

3.5 TESTING

3.5.1 Telecommunications Cabling Testing

Perform telecommunications cabling inspection, verification, and performance tests on both Backbone and Horizontal cabling in accordance with TIA-568-C.1, TIA-568-C.2, TIA-568-C.3 and AHJ local guidance. Test equipment shall conform to TIA-1152. Perform optical fiber field inspection tests via attenuation measurements on factory reels and provide results along with manufacturer certification for factory reel tests. Remove failed cable reels from project site upon attenuation test failure.

3.5.1.1 Inspection

Visually inspect all telecommunications cabling jacket materials for UL or third party certification markings. Inspect cabling terminations in telecommunications rooms and at workstations to confirm color code for T568A pin assignments, and inspect cabling connections to confirm compliance with TIA-568-C.1, TIA-568-C.2, TIA-568-C.3, and TIA-570 for residential cabling. Visually confirm Category 6 marking of outlets, cover plates, outlet/connectors, cable physical damage, and patch panels.

3.5.1.2 Verification Tests

Backbone copper cabling shall be tested for DC loop resistance, shorts, opens, intermittent faults, and polarity between conductors, and between conductors and shield, if cable has overall shield. Test operation of shorting bars in connection blocks. Test cables after all terminations are complete but prior to being cross-connected.

For multimode optical fiber, perform optical fiber end-to-end attenuation tests in accordance with TIA-568-C.3 and TIA-526-14 using Tier 1 Option with power meter and light source for optical fiber. Validate/troubleshoot failures with Tier 2 Option. For single-mode optical fiber of sufficient distance (normally OSP), perform optical fiber end-to-end attenuation tests in accordance with TIA-568-C.3 and TIA-526-7 using Tier 2 Option, OTDR for single-mode optical fiber. Perform verification acceptance tests.

3.5.1.3 Performance Tests

Provide summary in .pdf (hard and soft copy) detailed tester results in test format .flw (soft copy only), and fiber power meter/OTDR reports (summary hard copy and detailed soft copy). All Test reports should have a building or project number on it. The final QC and certification of installation will be performed by TSD after the contractor has provided

passing and acceptable test results matching work area outlet labels, as-built drawings showing all telecommunications outlets and their labeled designator to include any empty conduit or ports coiled in overhead for future use and all building automated system ports such as DDC, Elevator, FACP, or WAPs. Test results that are marginal may not be accepted. Also fiber tests that pass the link budget but exceed tolerance on any connector or splice are considered a failure. All discrepancies must be repaired and retested.

Perform testing for each outlet and MUTOA as follows:

a. Perform Category 6 link tests in accordance with TIA-568-C.1 and TIA-568-C.2. Tests shall include wire map, length, insertion loss, NEXT, PSNEXT, ELFEXT, PSELFEXT, return loss, propagation delay, and delay skew.

b. Optical fiber Links. Perform optical fiber end-to-end link tests in accordance with TIA-568-C.3.

3.5.1.4 Final Verification Tests

Perform verification tests for all copper and optical fiber systems after the complete telecommunications cabling and workstation outlet/connectors are installed.

a. Voice Tests. These tests assume that dial tone service has been installed (normally only done for FACP, Elevator, or emergency phones). Connect to the network interface device at the demarcation point. Go off-hook and listen and receive a dial tone. If a test number is available, make and receive a local, long distance, and DSN telephone call.

b. Data Tests. These tests assume the Information Technology Staff has a network installed and are available to assist with testing (normally this is only done for VTC, CCTV). Connect to the network interface device at the demarcation point. Log onto the network to ensure proper connection to the network.

-- End of Section --

On Backboard – PROTECTOR / BUILDING ENTRANCE (BEP), TMGB,
Proper Bonding & Grounding, Cable Management and Slack on Ladder Rack.
Ladder rack should be anchored from comm. rack to at least two walls.

Rack or
Cabinet if in unsecure area

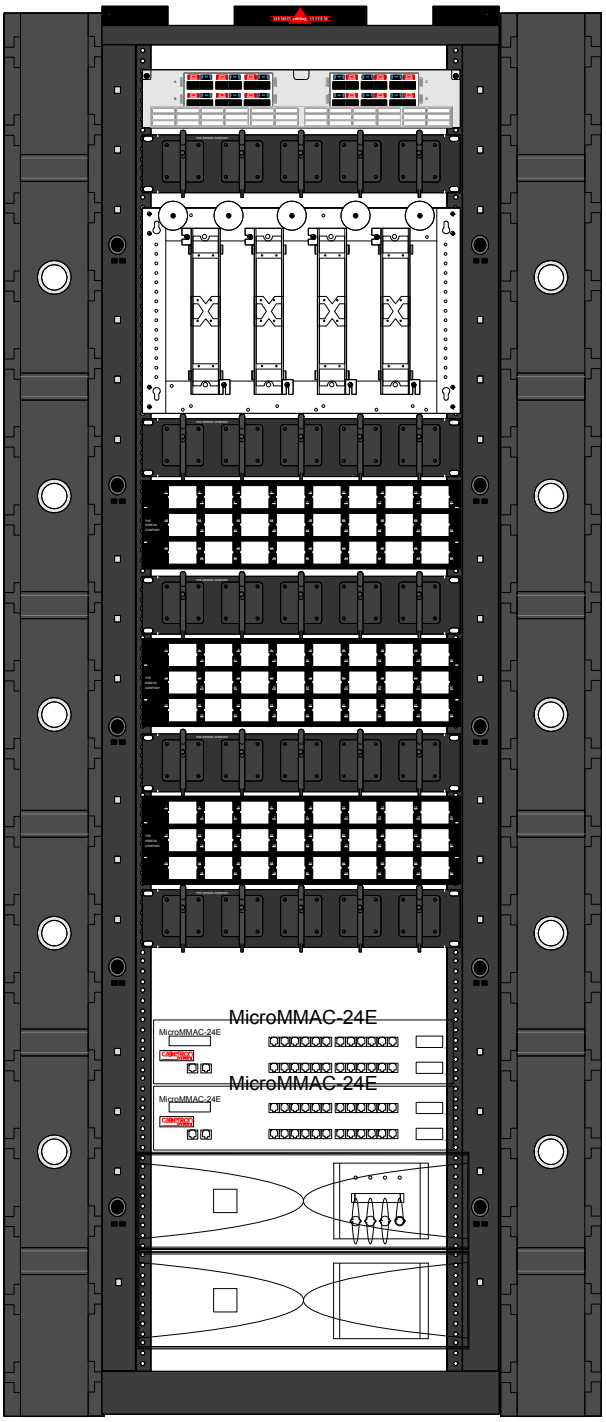

FIBER
Distribution

ST connectors

CABLE MANAGER

COPPER

Connecting BLOCKS

CABLE MANAGER

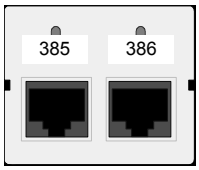

Panel Dual
Port Label

Bottom 15 RU in all racks is reserved for DATA equipment

Number of telecommunications work outlets in building determine number of patch panels and need for additional racks

If 2 racks are used backbone fiber and copper cable terminations are in the left rack, 3 or more racks are used: place the fiber and copper cable terminations in center racking to reduce patch cord length

Work Area Outlet Icons should match cable color

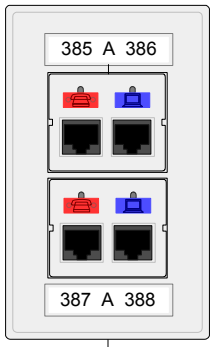

Work Area
Outlet

TELECOMMUNICATIONS INFRASTRUCTURE STANDARDS MARINE CORPS BASE CAMP LEJEUNE

SECTION 27 10 00
Encl A
RACK ELEVATION
EXAMPLE

TELECOMMUNICATIONS INFRASTRUCTURE STANDARDS
MARINE CORPS BASE CAMP LEJEUNE
SECTION 27 10 00 Encl B
BACK BOARD EXAMPLE

Telephone backboard - 4'x8' Provide min 2 void-free, interior grade plywood 19 mm (3/4 inch) thick as indicated. Backboards shall be fire rated with the fire stamp visible. Boards should be installed 4′ Width x 8′ Height securely fastened to the wall anywhere equipment is to be mounted.

Conduits 1¼" – with plastic / bonding bushings - home run to work area outlet or cable tray.

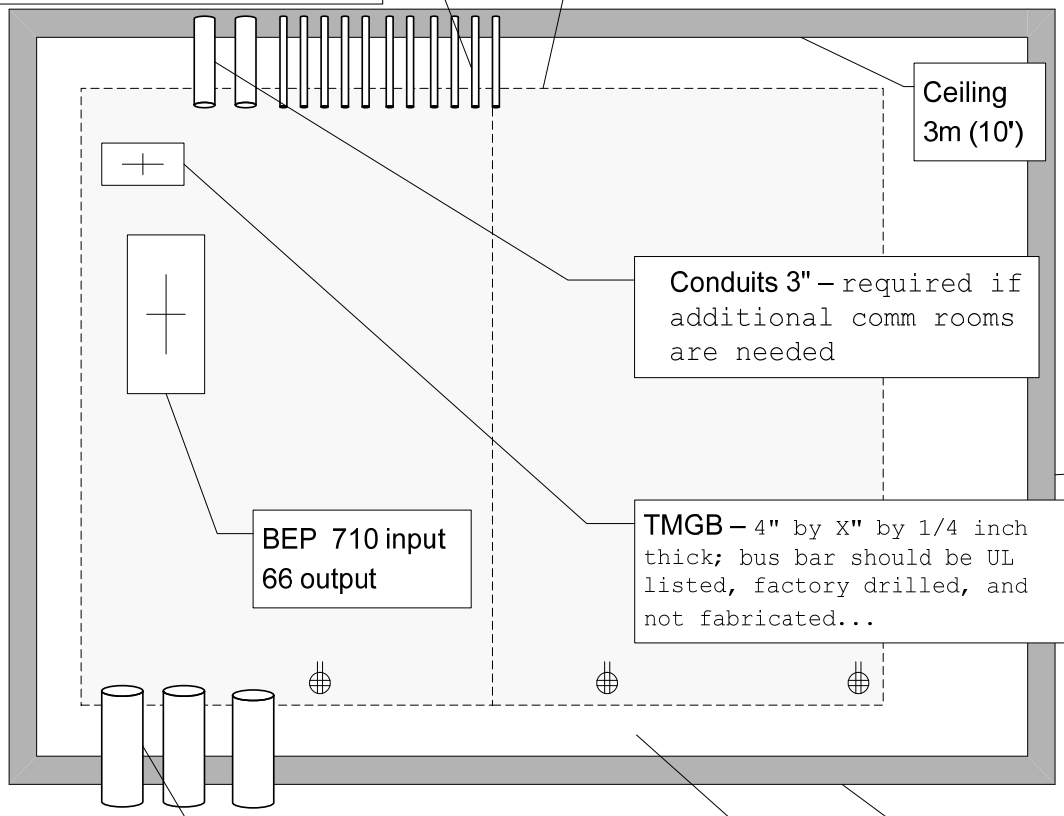

Conduits 4" – 3 PVC or Rigid steel for telecomm with bonding bushings run to demarcation point outside building

General notes
-all metalic conduit and equipment must be bonded to the TMGB and building ground per TIA-607-B with min #6AWG stranded green sheath conductor.
-all conduits need to be securely mounted, fire stopped, and over lap the back board by 3-6".
-2 dedicated 20 amp dual power is required per comm. rack/cabinet.
All comm rooms should have min 3 racks.

-If wired by base telephone; contractor should install all except the below and add pull strings in conduits.

-if wired by contractor; install four CAT6 cables in each 1¼" conduit to typical work area outlet; also install all ladder racks, patch panels, cabinets, building protectors, OSP PE-39 cable, fiber optic cable, riser cable, and equipment IAW Base Tele 27 10 00 .

NOT to Scale for reference only

TELECOMMUNICATIONS INFRASTRUCTURE STANDARDS
MARINE CORPS BASE CAMP LEJEUNE
SECTION 27 10 00 Encl C
Telecomm room typical layout

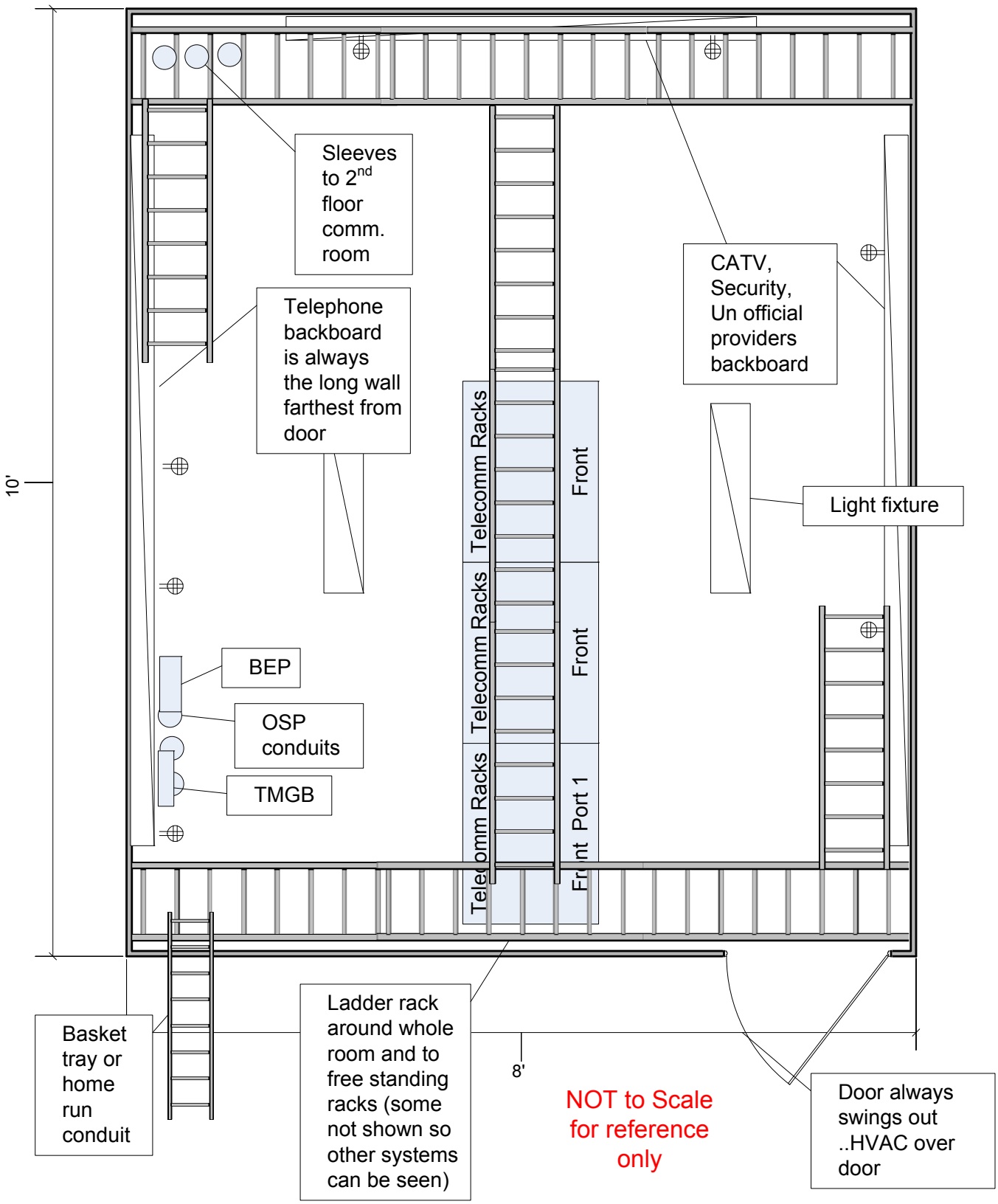

THIS PAGE HAS BEEN INTENTIONALLY LEFT BLANK

+

SECTION 28 31 76.00 22

INTERIOR COMBINATION EMERGENCY COMMUNICATIONS SYSTEMS
04/16

PART 1 GENERAL

1.1 RELATED SECTIONS

Section 26 00 00.00 20 BASIC ELECTRICAL MATERIALS AND METHODS, applies to this section, with the additions and modifications specified herein. In addition, refer to the following sections for related work and coordination:

Section 21 13 13.00 20 WET PIPE SPRINKLER SYSTEM, FIRE PROTECTION
Section 21 21 00 FIRE EXTINGUISHING SPRINKLER SYSTEMS (RESIDENTIAL)

Section 23 00 00 AIR SUPPLY, DISTRIBUTION, VENTILATION, AND EXHAUST SYSTEMS
Section 08 71 00 DOOR HARDWARE
Section 07 84 00 FIRESTOPPING for additional work related to firestopping.

1.2 REFERENCES

The publications listed below form a part of this specification to the extent referenced. The publications are referred to within the text by the basic designation only.

ACOUSTICAL SOCIETY OF AMERICA (ASA)

ASA S3.2	(2009; R 2014) Method for Measuring the Intelligibility of Speech Over Communication Systems (ASA 85)

FM GLOBAL (FM)

FM APP GUIDE	(updated on-line) Approval Guide http://www.approvalguide.com/

INSTITUTE OF ELECTRICAL AND ELECTRONICS ENGINEERS (IEEE)

IEEE C62.41.1	(2002; R 2008) Guide on the Surges Environment in Low-Voltage (1000 V and Less) AC Power Circuits
IEEE C62.41.2	(2002) Recommended Practice on Characterization of Surges in Low-Voltage (1000 V and Less) AC Power Circuits

INTERNATIONAL ELECTROTECHNICAL COMMISSION (IEC)

IEC 60268-16	(2003; ED 4.0) Sound System Equipment - Part 16: Objective Rating Of Speech Intelligibility By Speech Transmission Index

INTERNATIONAL ORGANIZATION FOR STANDARDIZATION (ISO)

ISO 7240-16	(2007) Fire Detection And Alarm Systems — Part 16: Sound System Control And Indicating Equipment

NATIONAL FIRE PROTECTION ASSOCIATION (NFPA)

NFPA 170	(2015) Standard for Fire Safety and Emergency Symbols
NFPA 241	(2013; Errata 2015) Standard for Safeguarding Construction,Alteration, and Demolition Operations
NFPA 70	(2014; AMD 1 2013; Errata 1 2013; AMD 2 2013; Errata 2 2013; AMD 3 2014; Errata 3-4 2014; AMD 4-6 2014) National Electrical Code
NFPA 72	(2019) National Fire Alarm and Signaling Code
NFPA 90A	(2018) Standard for the Installation of Air Conditioning and Ventilating Systems
NFPA 720	(2015) Standard for the Installation of Carbon Monoxide (CO) Detection and Warning Equipment

UNDERWRITERS LABORATORIES (UL)

UL 1480	(2016) Standard for Speakers for Fire Alarm, Emergency, and Commercial and Professional Use
UL 1971	(2002; Reprint Oct 2008) Signaling Devices for the Hearing Impaired
UL 2017	(2008; Reprint Jan 2016) General-Purpose Signaling Devices and Systems
UL 268	(2016; Reprint Jul 2016) UL Standard for Safety Smoke Detectors for Fire Alarm Systems
UL 268A	(2008; Reprint Oct 2014) Smoke Detectors for Duct Application
UL 464	(2016) Standard for Audible Signal Appliances

UL 864	(2014) Standard for Control Units and Accessories for Fire Alarm Systems
UL Electrical Constructn	(2015) Electrical Construction Equipment Directory
UL Fire Prot Dir	(2015) Fire Protection Equipment Directory

1.3 DEFINITIONS

Wherever indicated in this specification or on the contract drawings, the equipment, devices, and functions shall be defined as follows:

a. COMBINATION EMERGENCY COMMUNICATIONS SYSTEM: NFPA 72 terminology describing a combination fire alarm and mass notification system where the building mass notification system is integrated with the building fire alarm control unit to form one combined system that performs both functions.

b. COMBINATION EMERGENCY COMMUNICATIONS SYSTEM PANELS (CECP): Combination Emergency Communications System Panel may consist of separate autonomous control unit and fire alarm control unit supplied from the same or different manufacturers, or a single panel supplied by one manufacturer. Where the term "COMBINATION EMERGENCY COMMUNICATIONS SYSTEM PANEL" or "CECP" is utilized the intent is NOT to limit the designer to one manufacturer or a single enclosure. HOWEVER; whether installed as combined or separate panels or provided by one or separate manufacturers, the panels shall be integrated in their controls and performance to meet the requirements of this section and NFPA 72.

c. AUTONOMOUS CONTROL UNIT (ACU): The primary control unit for the building mass notification system portion of the CECP. ACU may be physically separate from, or a integral part, of the FACU

d. FIRE ALARM CONTROL UNIT (FACU): Fire alarm system component portion of the CECP, provided with primary and secondary power sources, which receives signals from initiating devices or other fire alarm control units, and processes these signals to determine part or all of the required fire alarm system output function(s). FACU may be separate from or a portion of the ACU. Where more than one fire alarm control unit is installed in the building, one panel shall be designated as the Master Fire Alarm Control Unit.

e. SUPPLEMENTARY FIRE ALARM CONTROL PANELS: When necessary multiple interconnected fire alarm control units may be utilized to create a networked system consisting of a master fire alarm control unit and one or more supplementary fire alarm control panels capable of peer to peer communications. Networked panels shall be UL Listed as compatible. Interconnecting separate manufacturers' fire alarm panels or fire alarms panels not capable of peer-to-peer communications is prohibited. The term "supplementary fire alarm control panel" does not refer to releasing service fire alarm panels.

f. LOCAL OPERATING CONSOLE (LOC): Equipment used by authorized personnel and emergency responders to make live voice building-wide mass notification system messages

g. SUPPLEMENTARY NOTIFICATION APPLIANCE CIRCUIT(SNAC)and AUXILIARY POWER SUPPLY PANELS: A panel separate from the "combination emergency communications system panel"(s), usually located remote from the main panel(s). SNAC's are utilized to power visual notification appliance circuits and auxiliary power supplies provide supplementary power to devices or functions requiring power in addition to that available from the SLC.

h. MONITOR MODULE: Term utilized to describe a Signaling Line Circuit Interface as defined by NFPA 72.

i. CONTROL MODULE AND RELAY MODULE: Terms utilized to describe an "Emergency Control Function Interface" as defined in NFPA 72.

j. TERMINAL CABINET: A steel cabinet with locking, hinge-mounted door that terminal strips are securely mounted inside. Utilizing tape or glue is not an acceptable means of mounting terminal strips.

k. TEXTUAL AUDIBLE APPLIANCES: Term utilized by NFPA 72 to describe speaker appliances. The term "textual audible appliance" is utilized because the term "speaker" might also refer to a person who is speaking.

1.4 SYSTEM DESCRIPTION

1.4.1 Scope

This work includes completion of design and modifying the existing combination emergency communications system as described herein and on the contract drawings for P1482.

Fire Alarm Control Unit portion shall be an analog/addressable system. Include in the system all necessary wiring, raceways, pull boxes, terminal cabinets, outlet and mounting boxes, control equipment, alarm, and supervisory signal initiating devices, alarm notification appliances, supervising station fire alarm system transmitter, and other accessories and miscellaneous items required for a complete operating system even though each item is not specifically indicated or described. Provide systems complete and ready for operation.
Equipment and devices shall be compatible and operable with existing building combination fire alarm and mass notification system. Equipment shall not impair reliability or operational functions of the existing system. The existing building system panel is JCI 2640
Equipment and devices shall be compatible and operable with the existing fire alarm reporting system and shall not impair reliability or operational functions of the existing system. Existing fire alarm reporting system is a "DACT" system and utilizes point reporting rather than event reporting. transmitters.

Equipment and devices shall be compatible and operable with existing installation-wide mass notification system and shall not impair reliability or operational functions of the existing system. The installation-wide mass notification system utilizes Cooper/Madahcom and the transceiver will be provided by SPAWAR.

a. Provide equipment, materials, inspection, and testing in strict accordance with the required and advisory provisions of NFPA 72, ISO 7240-16, and IEC 60268-16 except as modified herein. The system layouts on the contract drawings show the intent of coverage and are

shown in suggested locations. Final quantity, system layout, and coordination are the responsibility of the Contractor.
b. Where remote supplementary fire alarm control units, supplementary notification appliance circuit panels, or supplementary power supply panels are needed, they shall be provided at the locations indicated. Contact the NAVFAC MIDLANT Fire Protection Engineer if locations for remote panels have not been indicated.

1.4.2 Technical Data and Computer Software

Computer software and technical data relating to computer software that are specifically identified in this project, and may be defined/required in other specifications, shall be delivered in accordance with the CONTRACT CLAUSES. Data to be submitted shall include complete system, equipment, and software descriptions. Descriptions shall show how the equipment will operate as a system to meet the performance requirements of the contract. The data package shall also include the following listed. Failure to fully comply with the following stipulations shall result in the removal and replacement of the combination emergency communications system at no cost to the Government. Requests for extension of time for any delay to the completion of the project due to the removal, redesign, resubmittal process, and replacement of the original system will not be considered. Liquidated damages shall apply and will be accessed in accordance with the contract clauses.

a. Identification of programmable portions of system equipment and capabilities.

b. Description of system revision and expansion capabilities and methods of implementation detailing both equipment and software requirements.

c. Provision of operational software data on all modes of programmable portions of the combination emergency communications system.

d. Description of Fire Alarm Control Unit equipment operation.

e. Description of auxiliary and remote equipment operations.

f. Library of application software.

g. Operation and maintenance manuals.

1.4.3 Keys

Keys and locks for equipment, panels and devices shall be identical. Provide the Contracting Officer with no less than six (6) keys of each type required. Direct requests for keys from all Government personnel to the Contracting Officer. Under no circumstances shall the contractor provide any keys to the building occupants. If any portion of building is occupied during construction or occupants begin moving into the building prior to project completion, the fire alarm contractor shall remove and secure all keys to the combination emergency communications system. Keys shall be CAT 60.

1.5 SUBMITTALS

Government approval is required for submittals with a "G" designation; submittals not having a "G" designation are for the Prime Contractor Quality Control approval. The NAVFAC MIDLANT Fire Protection Engineer shall review and approve all submittals requiring Government approval.

If permitted by the Contracting Officer, provide electronic submittals. File format of electronic submittal materials shall be portable document format. No other electronic formats shall be accepted. Catalog data shall be first generation scans or manufacturer's originals. Shop drawings shall be plotted to scale. Scale all line weights. Submittals consisting of illegible pdf's shall be returned disapproved without review. One hard copy review set of the entire package, including full scale shop drawings, shall accompany each submittal for use by the NAVFAC MIDLANT Fire Protection Engineer. The single hard copy review set shall be retained by the Government reviewer. The Government reviewer shall digitally stamp, sign and lock the electronic submittal package prior to returning the electronic copy to the Contracting Officer.

Submit the following in accordance with Section 01 33 00 SUBMITTAL PROCEDURES:

SD-01 Preconstruction Submittals

Within 36 days of contract award but no less than 14 days prior to commencing any work on site, the Prime Contractor shall submit the following for review and approval:

Qualifications for Fire Alarm System Subcontractor; G

On Staff Fire Alarm System Designer(s); G

Supervising Fire Alarm Technician; G

Installing Technicians; G

Testing Personnel; G

Contractor SD-02,SD-03 & SD-05 submittals received prior to the review and approval of the Qualifications of the Fire Alarm Subcontractor shall be returned Disapproved Without Review. All resultant delays shall be the sole responsibility of the Prime Contractor.

Contract requirements for the Fire Alarm Contractor to have NICET Certified Fire Alarm Technicians on staff are NOT negotiable. The Prime Contractor's Quality Control Manager shall not endorse nor submit the qualifications for the fire alarm system subcontractor if fire alarm contractor does not have the required NICET Technicians on staff. All resultant delays shall be the sole responsibility of the Prime Contractor.

SD-02 Shop Drawings

Include Annotated catalog data, in table format on the drawings, showing manufacturer's name, model, voltage, and catalog numbers for equipment and components. Submitted shop drawings shall not be smaller than ANSI D (22 in x 34 in).

Wiring Diagrams; G

Provide point-to-point wiring diagrams showing the points of connection and terminals used for electrical field connections in the system, including interconnections between the equipment or

systems that are supervised or controlled by the system. Diagrams shall show connections from field devices to the CECP and remote fire alarm control units, initiating circuits, switches, relays and terminals. Point-to-point wiring diagrams shall be job specific. Point-to-point wiring diagrams shall not indicate connections or circuits not being utilized.

Provide complete riser diagrams indicating the wiring sequence of devices and their connections to the control equipment. Include a color-code schedule for the wiring. Include floor plans showing the locations of devices, appliances, and equipment.

System Layout; G

Plan view drawing showing device locations, terminal cabinet locations, junction boxes, other related equipment, conduit routing, conduit sizes, wire counts, wire color-coding, circuit identification in each conduit, and circuit layouts for all floors. Drawings shall comply with the requirements of NFPA 170, and NFPA 72. Indicate candela rating of each visual notification appliance. Indicate the wattage of each speaker. Clearly identify the locations of isolation modules. Indicate the addresses of all devices, modules, relays, etc.

System Operation; G

A complete list of device addresses, and corresponding messages.

Provide a complete description of the system operation in matrix format.

Notification Appliances; G

Provide data on each circuit to indicate that there is at least 25 percent spare capacity on each notification appliance circuit, a 25 percent spare capacity for each supplementary notification appliance circuit panel and auxiliary power supply panel, and 25 percent spare capacity for each signaling line circuit. Annotate data for each circuit on the drawings.

Amplifiers; G

Provide data to indicate the amplifiers have sufficient capacity to simultaneously drive all notification speakers at the wattage setting required to meet intelligibility requirements while maintaining a minimum 25 percent spare capacity. Annotate data for each circuit on the drawings. Contractor shall be responsible for additional and/or larger amplifiers if adjustments during testing to meet intelligibility requirements reduces the spare capacities to less than 25 percent.

As-Built Drawings

Provide four sets of detailed as-built drawings. Furnish four sets of CD or DVD discs containing software backup with CAD-based drawings in latest version of AutoCAD *.dwg format of as-built drawings and schematics. Discs shall also include as-built drawings plotted to scale in *.pdf format along with *.pdf copies of the manufacturer's data, and calculations. The drawings shall

include complete wiring diagrams showing point-to-point connections between devices and equipment, both factory and field wired. Include a riser diagram and drawings showing the as-built location of devices and equipment. The drawings shall show the system as installed, including deviations from both the contract drawings and the approved shop drawings. These drawings shall be submitted within 14 days after the final acceptance test of the system. At least one copy of the as-built (red-lined) drawings shall be provided at the time of, or prior to, the final acceptance test.

SD-03 Product Data

Provide UL or FM listing cards for equipment provided. Include annotated catalog data, in table format, showing manufacturer's name, model, voltage and catalog numbers for all equipment and components.

Technical Data And Computer Software; G

SUPPLEMENTARY NOTIFICATION APPLIANCE CIRCUIT PANEL; G
AUXILIARY POWER SUPPLY PANEL; G

Amplifiers; G
Digitalized voice generators; G

Batteries; G
Battery chargers; G
Wiring and cable; G
Surge protection; G
Ceiling bridges for ceiling mounted appliances; G
Back boxes and conduit; G
Terminal cabinets/assemblies; G
Notification appliances; G
Addressable monitor module; G
Addressable control/relay module; G
Isolation module; G
Manual stations; G
Smoke detectors; G
Duct mounted smoke detectors; G
Carbon monoxide detector; G

Waterflow switches; G
Tamper switches; G
ENVIRONMENTAL ENCLOSURES OR GUARDS; G
Manufacturer's installation and maintenance manuals; G

Provide one copy of the most recent Manufacturer's installation and maintenance manuals for each piece of equipment being installed. This data is necessary for use by NAVFAC MIDLANT Fire Protection Engineering when reviewing the contractor's submittal. Manual may be submitted in *.pdf format and submitted directly to NAVFAC MIDLANT Fire Protection Engineering.

SD-05 Design Data

System Operation; G

Provide a complete description of the system operation, in matrix format, on the shop drawings.

Battery power; G

a. Verify battery capacity exceeds supervisory and alarm power requirements.

1). Substantiate the battery calculations for alarm, alert, and supervisory power requirements. Ampere-hour requirements for each system component and each panel component, and the battery-recharging period, shall be included.

2). Provide complete battery calculations for both the alarm, alert, and supervisory power requirements. Ampere-hour requirements for each system component shall be submitted with the calculations.

b. For battery calculations, use the following assumptions: Assume a starting voltage of 24 VDC for starting the calculations to size the batteries. Calculate the required Ampere-hour for the specified standby time, and then calculate the required Ampere-hour for the specified alarm time. Calculate the nominal battery voltage after operation on batteries for the specified time period.

Voltage Drop Calculations; G

Provide voltage drop calculations to indicate sufficient voltage is available for proper operation of the system and all components, at the minimum rated voltage of the system operating on batteries.

Utilize the lump sum method for voltage drop calculations. Assume the entire appliance load is at the end of the circuit (lump sum). Utilize 16 VDC as the operating voltage of the appliances and 21.6 VDC as the voltage at the circuit terminals.

Spare Capacity Calculations; G

Provide calculations verifying the contract stipulated 25 spare capacity is provided for each notification appliance circuit, FACU/ACU, SNAC panel, and auxiliary power supply panel. Also provide a calculation indicating a 25 percent spare capacity is maintained for each SLC.

SD-06 Test Reports

Field Quality Control
Testing Procedures; G
Smoke detector testing procedures; G
Carbon monoxide detector testing procedures; G

SD-07 Certificates

Installer

SD-09 Manufacturer's Field Reports

Combination emergency communications system panel (CECP)

Provide reports on preliminary tests, include printer information. Include the NFPA 72 Record of Completion and NFPA 72 Inspection and Testing Form, with the appropriate test reports. printer generated data shall consist of a unique identifier for each device, combination emergency communications system panel, initiating device and notification appliance, with an indication of test results, and signature of the factory-trained technician of the control panel manufacturer and equipment installer.

SD-10 Operation and Maintenance Data

Operation and Maintenance (O&M) Instructions; G

Provide two copies of the Operation and Maintenance Instructions, indexed and in booklet form. The Operation and Maintenance Instructions shall be a single volume or in separate volumes, and may be submitted as a Technical Data Package. Manuals shall be approved prior to training.

Original and backup copies of all software delivered for this contract on each type of CD/DVD media utilized.

If permitted by the Contracting Officer, provide Operation and Maintenance (O&M) Instructions in electonic format. File format of electronic submittal materials shall be portable document format. No other electronic formats shall be accepted.

Instruction of Government Employees

The installers training history for the employees involved with this contract.

1.6 QUALITY ASSURANCE

Equipment and devices shall be compatible and operable with existing installation-wide fire alarm reporting and mass notification systems and shall not impair reliability or operational functions of existing system. The installation-wide fire reporting system utilizes DACT. The installation-wide mass notification system utilizes Cooper/Madahcom tranceivers.

a. In NFPA publications referred to herein, consider advisory provisions to be mandatory, as though the word "shall" had been substituted for "should" wherever it appears; interpret reference to "authority having jurisdiction" and/or AHJ to mean the Naval Facilities Engineering Command, MIDLANT , Fire Protection Engineer.

b. The recommended practices stated in the manufacturer's literature or documentation shall be considered as mandatory requirements.

c. Devices and equipment for fire alarm service shall be listed by UL Fire Prot Dir or approved by FM APP GUIDE.

1.6.1 Qualifications

1.6.1.1 Qualifications for Fire Alarm System Subcontractor

The Prime Contractor shall be responsible for obtaining the services of a

qualified fire alarm system subcontractor for the design and installation of the combination emergency communications system. The firm designated by the Prime Contractor as their qualified fire alarm system subcontractor:

a. Shall have been in existence a minimum of four years prior to contract award.

b. Shall provide proof of previous experience installing a system of equal or greater complexity, utilizing the same equipment to be provided under this contract.

c. Shall provide proof of adequate qualified staffing to meet all of the following requirements:

1.6.1.1.1 On-Staff Fire Alarm System Designer(s)

A qualified fire alarm contractor shall have at least one on staff NICET Level IV SET, (Senior Engineering Technician) fire alarm technician. This technician shall also have proof of factory certified training for the design of the systems utilizing the equipment being installed. The NICET Level IV technician(s) shall be the lead technician responsible for the contractor's design of the combination emergency communications system, including, but not limited to, the selection and design of necessary equipment, battery, power and circuit calculations, provision of the required manufacturers data and the creation and completion of the shop drawings. The submittal materials (drawings, calculations & manufacturer's data) shall bear the stamp and signature of the NICET Level IV technician. RFI's pertaining to the combination emergency communications system shall be reviewed and signed by the NICET Level IV technician prior to submission to the Contracting Officer.

A NICET Level III, ET (Engineering Technician) fire alarm technician may be utilized to create the shop drawings, calculations and submittal material provided the Level III technician is directly supervised by the NICET Level IV technician. The NICET Level IV technician remains responsible for the system design and submittal materials. Both technicians' signatures and stamps shall be included on the submittal material.

1.6.1.1.2 Supervising Fire Alarm Technician

A NICET Level II, AET (Associate Engineering Technician) fire alarm technician with a minimum of 8 years experience shall supervise the installation of the combination emergency communications system. The fire alarm technicians supervising the installation of equipment shall also be factory trained in the installation, adjustment, testing, and operation of the equipment specified herein and on the approved shop drawings. Supervising technician shall be a direct employee of the firm designated by the Prime Contractor as their qualified fire alarm system subcontractor.

1.6.1.1.3 Installing Technicians

The installing Contractor shall provide fire alarm technicians with a minimum of four years of experience utilized to assist in the installation and termination devices, appliances, cabinets and panels. The fire alarm technicians installing the equipment shall be factory trained in the installation, adjustment, testing, and operation of the equipment specified herein and on the approved shop drawings. Technicians with minimum NICET Level I or II Certification are preferred. Installing

technicians shall be direct employees of the firm designated by the Prime Contractor as their qualified fire alarm system subcontractor.

1.6.1.1.4 Testing Personnel

The installing Contractor shall provide Fire Alarm Technicians with a minimum of eight years of experience utilized to test and certify the installation of the combination emergency communications system devices, appliances, cabinets and panels. The fire alarm technicians testing the equipment shall be factory trained in the installation, adjustment, testing, and operation of the equipment specified herein and on the approved shop drawings. Testing personnel shall be direct employees of the firm designated by the Prime Contractor as their qualified fire alarm system subcontractor.

1.6.2 Regulatory Requirements

1.6.2.1 Requirements for Fire Protection Service

Equipment and material shall be Listed by UL and listed in UL Fire Prot Dir, UL Electrical Constructn or Approved by FM and listed in FM APP GUIDE. Where the terms "listed" or "approved" appear in this specification, they shall mean listed in UL Fire Prot Dir or FM APP GUIDE. The omission of these terms under the description of any item of equipment described shall not be interpreted as waiving this requirement. All listings or approval by testing laboratories shall be from an existing ANSI or UL published standard.

1.7 DELIVERY, STORAGE, AND HANDLING

Protect equipment delivered and placed in storage from the weather, humidity, and temperature variation, dirt and dust, and other contaminants.

1.8 OPERATION AND MAINTENANCE (O&M) INSTRUCTIONS

The combination emergency communications system Operation and Maintenance Instructions shall include:

a. "Manufacturer Data Package 5" as specified in Section 01 78 23 OPERATION AND MAINTENANCE DATA. Provide an electronic copy of the OPERATION AND MAINTENANCE (O&M) INSTRUCTIONS

b. Manufacturer's installation and maintenance manuals outlining step-by-step procedures required for system startup, operation, and shutdown. The manual shall include the manufacturer's name, model number, service manual, parts list, and complete description of equipment and their basic operating features.

c. Maintenance manual listing routine maintenance procedures, possible breakdowns and repairs, and troubleshooting guide. The manuals shall include conduit layout, equipment layout and simplified wiring, and control diagrams of the system as installed.

d. The manuals shall include complete procedures for system revision and expansion, detailing both equipment and software requirements.

e. Software delivered for this project shall be provided, on CD or DVD discs.

f. Printouts of configuration settings for all devices.

g. Routine maintenance checklist. The routine maintenance checklist shall be arranged in columnar format. The first column shall list all installed devices, the second column shall state the maintenance activity or state no maintenance required, the third column shall state the frequency of the maintenance activity, and the fourth column for additional comments or reference.

1.9 WARRANTY PERIOD REPAIR SERVICE, MAINTENANCE AND ADJUSTMENTS

During guarantee period, the service technician shall be on-site within 24 hours after notification. All repairs shall be completed within 24 hours of arrival on-site. During the guarantee period, the installing fire alarm contractor is responsible for conducting all required testing and maintenance in accordance with the requirements and recommended practices of NFPA 72 and the system manufacturer. Installing fire alarm contractor is NOT responsible for any damage resulting from abuse, misuse or neglect of equipment by the end user

1.10 EXTRA MATERIALS

1.10.1 Repair Service/Replacement Parts

Repair services and replacement parts for the system shall be available for a period of ten years after the date of final acceptance of this work by the Contracting Officer.

1.10.2 Interchangeable Parts

Spare parts furnished shall be directly interchangeable with the corresponding components of the installed system. Spare parts shall be suitably packaged and identified by nameplate, tagging, or stamping. Spare parts shall be delivered to the Contracting Officer at the time of the final acceptance testing.

1.10.3 Spare Parts

Furnish the following spare parts and accessories:

a. Four fuses for each fused circuit

b. Two smoke detectors
c. Four Speaker-Strobes
d. One carbon monoxide detectors

e. Two Manual Pull Stations

f. Two addressable interface modules

1.10.4 Special Tools

Software, connecting cables and proprietary equipment, necessary for the maintenance, testing, and reprogramming of the equipment shall be furnished to the Contracting Officer.

PART 2 PRODUCTS

2.1 MATERIALS AND EQUIPMENT

2.1.1 Manufacturer

Components shall be of current design and shall be in regular and recurrent production at the time of installation. Provide design, materials, and devices for a combination emergency communications system, complete, conforming to NFPA 72, except as otherwise or additionally specified herein.

2.1.2 Standard Products

Provide materials, equipment, and devices that are UL Listed or FM Approved for fire protection service when so required by NFPA 72 or this specification. Select material from one manufacturer, where possible, and not a combination of manufacturers, for any particular classification of materials. Material and equipment shall be the standard products of a manufacturer regularly engaged in the manufacture of the products for at least two years prior to bid opening.

2.1.3 Nameplates

Major components of equipment shall have the manufacturer's name, address, type or style, model or serial number, catalog number, date of installation, installing Contractor's name and address, and the contract number provided on a new plate permanently affixed to the item or equipment. Major components include, but are not limited to, the following:

a. CECP (includes component panels)

b. Automatic transmitters (for both the installation-wide fire alarm reporting system and installation-wide mass notification systems)

Furnish nameplates to obtain approval by the Contracting Officer before installation. Obtain approval by the Contracting Officer for installation locations. Nameplates shall be etched metal or plastic, permanently attached by screws to panels or adjacent walls.

2.2 GENERAL PRODUCT REQUIREMENT

All combination emergency communications system equipment shall be listed for use under the applicable reference standards.

2.3 FIRE ALARM CONTROL UNIT(FACU) AND AUTONOMOUS CONTROL UNIT(ACU)

Provide a complete control panel fully enclosed in a lockable steel enclosure as specified herein. At the designer's discretion, the FACU and ACU may be housed in separate panels that contain independent power supplies and batteries or the ACU may be housed in the same panel with the FACU as a combination emergency communications system panel (CECP). Operations required for testing or for normal care and maintenance of the systems shall be performed from the front of the FACU enclosure. If more than a single unit is required at a location to form a complete control panel, the unit enclosures shall match exactly.

a. Each control unit shall provide power, supervision, control, and logic for the entire system, utilizing solid state, modular components, internally mounted and arranged for easy access. Each control unit

shall be suitable for operation on a 120 Volt, 60 Hertz, normal building power supply. Provide each panel with supervisory functions for power failure, internal component placement, and operation.

b. Visual indication of alarm, supervisory, or trouble initiation on the fire alarm control unit shall be by liquid crystal display or similar means with a minimum of 80 characters, that at least 32 are field changeable. The ACU shall have the capability of temporarily deactivating the fire alarm messages while delivering voice messages. Provide conductor integrity monitoring for strobe, display, temporary deactivation of fire alarm audible notification appliances and speaker wiring.

c. Provide secure operator console with a microphone for delivering live voice messages. Provide adequate discrete outputs to temporarily deactivate fire alarm audible notification, and initiate/synchronize strobes. Provide a complete set of self-diagnostics for controller and appliance network. Provide local diagnostic information display and local diagnostic information and system event log file.

2.3.1 Cabinet

Install control panel components in cabinets large enough to accommodate all components and also to allow ample gutter space for interconnection of panels as well as field wiring. The enclosure shall be identified by an engraved laminated phenolic resin nameplate. Lettering on the nameplate shall say "Fire Alarm and Mass Notification Control Panel" and shall not be less than one inch high. Provide prominent rigid plastic or metal identification plates for lamps, circuits, meters, fuses, and switches. The cabinet shall be provided in a sturdy steel housing, complete with back box, hinged steel door with cylinder lock, and surface mounting provisions.

2.3.2 Control Modules

Provide power and control modules to perform all functions of the FACU. Provide audible signals to indicate any alarm, supervisory, or trouble condition. The alarm signals shall be different from the trouble signal. Connect circuit conductors entering or leaving the panel to screw-type terminals with each terminal marked for identification. Locate diodes and relays, if any, on screw terminals in the FACU. Circuits operating at 24 VDC shall not operate at less than 21.6 Volts. Circuits operating at any other voltage shall not have a voltage drop exceeding 10 percent of nominal voltage.

2.3.3 Silencing Switches

a. Alarm Silencing Switch: Provide an alarm silencing switch at the FACU that shall silence the audible signal but not affect the visual alarm indicator. This switch shall be overridden upon activation of a subsequent alarm.

b. Supervisory/Trouble Silencing Switch: Provide supervisory and trouble silencing switch that shall silence the audible trouble and supervisory signal, but not affect the visual indicator. This switch shall be overridden upon activation of a subsequent alarm, supervision, or trouble condition. Audible trouble indication must resound automatically every 24 hours after the silencing feature has been operated.

2.3.4 Non-Interfering

Power and supervise each circuit such that a signal from one device does not prevent the receipt of signals from any other device. Circuits shall be manually reset by switch from the FACU after the initiating device or devices have been restored to normal.

2.3.5 Voice Notification System

The Voice Notification System shall comply with the requirements of NFPA 72 for Emergency Voice/Alarm Communications System requirements ISO 7240-16, IEC 60268-16, except as specified herein.

Tones and voice messages shall repeat until the control panel is reset or silenced. A live voice message shall override the automatic audible output through use of a microphone input at the control panel.

a. The system shall be a single channel voice notification system incorporating user selectability of a minimum 8 distinct sounds for tone signaling, and the incorporation of a voice module for delivery of prerecorded messages.

b. The digitalized voice message shall consist of a non-volatile (EPROM) microprocessor based input to the amplifiers. The microprocessor shall actively interrogate circuitry, field wiring, and digital coding necessary for the immediate and accurate rebroadcasting of the stored voice data into the appropriate amplifier input. Loss of operating power, supervisory power, or any other malfunction that could render the digitalized voice module inoperative shall automatically cause the three tone temporal signal to take over all functions assigned to the failed unit.

c. When using the microphone, live messages shall be broadcast through all speakers. The system shall be capable of operating all speakers at the same time.

d. The Mass Notification functions shall override the manual or automatic fire alarm notification or Public Address (PA) functions. The system shall have the capability of utilizing a remote microphone station with redundant controls of the notification system control panel. A hand held microphone shall be provided and, upon activation, shall take priority over any tone signal, recorded message or PA microphone operation in progress, while maintaining the strobe Notification Appliance Circuits activation.

   Where the Combined Emergency Communications System consists of separate autonomous control and fire alarm control units, a Class X pathway shall be provided as the means for activating the strobe appliances.

   The activation of the strobe circuits shall follow the operation of the speaker notification appliance circuits.

   Audio output shall be selectable for line level (600 ohms), 25 or 70.7 volt output.

   The audio amplifier outputs shall be not greater than 100 watts RMS output.

The strobe notification appliance circuits shall provide at least 2 amps of 24 VDC power to operate strobes and have the ability to synchronize all strobes.

All outputs and operational modules shall be fully supervised with on-board diagnostics and trouble reporting circuits.

Form "C" contacts shall be provided for system alarm and trouble conditions.

Circuits shall be provided for operation of auxiliary appliances during trouble conditions.

During a Mass Notification event the panel shall not generate nor cause any trouble alarms to be generated with the fire alarm portion of the combination emergency communications system.

Mass Notification functions shall take precedence over all other function performed by the Voice Notification System.

Messages shall be recorded professionally utilizing standard industry methods and be recorded utilizing a professional female voice. Message and tone volumes shall both be at the same decibel level. Messages recorded from the system microphone shall not be accepted. Messages shall be the following:

1) FIRE ALARM MESSAGE: Three Tone Temporal Pattern (0.5 sec on, 0.5 second off, 0.5 second on, 0.5 second off, 0.5 second on, 1.5 second off.) The alarm signal shall be a square wave. The wave shall have a fundamental frequency of 520 Hz ± 10 percent followed by:

"May I have your attention, please. May I have your attention, please. A fire has been reported in the building. Please leave the building by the nearest exit . " Provide a 2 second pause. Repeat the tones and message.

2) CARBON MONOXIDE ALARM MESSAGE: Four Tone Temporal (0.5 sec on, 0.5 second off, 0.5 second on, 0.5 second off, 0.5 second on, 0.5 second off, 0.5 second on,, 1.5 second off.) The alarm signal shall be a square wave. The wave shall have a fundamental frequency of 520 Hz ± 10 percent followed by:

"May I have your attention please. May I have your attention please. High levels of carbon monoxide have been detected in the building. Please leave the building by the nearest exit." Provide 2 second pause. Repeat the tones and message.

a. Auxiliary Input Module shall be designed to be an outboard expansion module to either expand the number of optional remote microphone stations, or allow a telephone interface.

2.3.6 Memory

Provide each control unit with non-volatile memory and logic for all functions. The use of long-life batteries, capacitors, or other age-dependent devices shall not be considered as equal to non-volatile processors, PROMS, or EPROMS.

2.3.7 Field Programmability

Provide control units and control panels that are fully field-programmable for control, initiation, notification, supervisory, and trouble functions of both input and output. The system program configuration shall be menu driven. System changes shall be password protected and shall be accomplished using personal computer-based equipment. Any proprietary equipment and proprietary software needed by qualified technicians to implement future changes to the combination emergency communications system shall be provided as part of this contract. Passwords for all levels of access shall be the manufacturer's default password.

2.3.8 Input/Output Modifications

The FACU shall contain features allowing the bypass of input devices from the system or the modification of system outputs. These control features shall consist of a panel mounted keypad . Any bypass or modification to the system shall indicate a trouble condition on the FACU .

2.3.9 Resetting

Provide the necessary controls to prevent the resetting of any alarm, supervisory, or trouble signal while the alarm, supervisory or trouble condition exists on the system.

2.3.10 Instructions

Provide a typeset printed or typewritten instruction card mounted behind a Lexan plastic cover in a stainless steel or aluminum frame. Install the instructions on the interior of the FACU. The card shall show those steps to be taken by an operator when a signal is received, as well as the functional operation of the system under all conditions; normal, alarm, supervisory, and trouble. The instructions shall be approved by the Contracting Officer before being posted.

2.3.11 Walk Test

The FACU shall have a walk test feature. When using this feature, operation of initiating devices shall result in limited system outputs, so that the notification appliances operate for only a few seconds and the event is indicated on the system printer, but no other outputs occur.

2.3.12 History Logging

In addition to the required printer output, the control panel shall have the ability to store a minimum of 400 events in a log. These events shall be stored in a battery-protected memory and shall remain in the memory until the memory is downloaded or cleared manually. Resetting of the control panel shall not clear the memory.

2.3.13 RS-232-C Output

Each local control panel shall be capable of operating remote service type printers, and/or modems. The output shall be paralleled ASCII from an EIA RS-232-C connection with a baud rate of 1200 or 2400 to allow use of any commonly available CRT, printer, or modem.

2.4 LOCAL OPERATING CONSOLES(LOC)

Provide a LOC at the location indicated on the contract drawings. The LOC shall consist of a Remote Microphone station incorporating a Push-To-Talk (PTT) hand held microphone and system status indicators of/for the system. Using the console, personnel in the building can, provide live voice messages and instructions. The LOC shall NOT have the capability of being utilized to activate any pre-recorded messages. The unit shall incorporate microphone override of any tone generation or prerecorded messages. The unit shall be fully supervised from the FACU. The housing for the LOC shall not be lockable.

2.5 SUPPLEMENTARY FIRE ALARM CONTROL UNITS

When necessary multiple, interconnected fire alarm control units may be utilized to create a networked system consisting of a master fire alarm control unit and one or more supplementary fire alarm control units capable of peer to peer communications. Networked panels shall be UL Listed as compatible. Interconnecting separate manufacturers' fire alarm units or fire alarms units not capable of peer to peer communications is prohibited. The term supplementary fire alarm control unit does not refer to releasing service fire alarm panels.

2.6 AMPLIFIERS PREAMPLIFIERS, DIGITALIZED VOICE GENERATORS

Any amplifiers, preamplifiers, digitalized voice generators, and other hardware necessary for a complete, operational, textual audible circuit conforming to NFPA 72 shall be housed within panels. The system shall automatically operate and control all building fire alarm speakers. Each amplifier shall be single output channel. The provision of backup amplifiers is not a contract requirement.

2.6.1 Construction

Amplifiers shall utilize computer-grade, solid-state components and shall be provided with output protection devices sufficient to protect the amplifier against any transient voltage up to ten times the highest rated voltage in the system.

2.6.2 Inputs

Each system shall be equipped with separate inputs from the tone generator, digitalized voice driver and panel mounted microphone. Microphone inputs shall be of the low impedance, balanced line type. Both microphone and tone generator input shall be operational on any amplifier.

2.6.3 Message Tones

Message tones shall be stored digitally. Tones shall be either attached to the recorded message or be able to be programmed via the system software or by selector programming switches within the main control unit.

2.6.4 Protection Circuits

Each amplifier shall be constantly supervised for any condition that could render the amplifier inoperable at its maximum output. Failure of any component shall cause, illumination of a visual "amplifier trouble" indicator on the CECP,

2.7 SUPPLEMENTARY NOTIFICATION APPLIANCE CIRCUIT PANEL(SNAC)

Provide SNAC panels as necessary to power and control visual notification appliance circuits in addition to those connected to the main FACU. Trouble contacts of SNAC panel shall be individually monitored for trouble conditions on the panel.

2.8 AUXILIARY POWER SUPPLY PANEL

Provide auxiliary power supply panels as necessary to power combination emergency communications system devices, relays and control modules where power requirements exceed the capacity of the FACU. Trouble contacts of auxiliary power supply panels shall be individually monitored for trouble conditions.

2.9 Installation-Wide Control

If an installation-wide control system for mass notification exists, the autonomous control unit shall communicate with the central control unit of the installation-wide system. The autonomous control unit shall receive commands/messages from the central control unit and provide status information.

2.10 INTERFACE TO THE INSTALLATION-WIDE MASS NOTIFICATION NETWORK

2.10.1 Wide Area Mass Notification Network/Local-Area Network (WAN/LAN)

The Wide Area Network/Local Area Network (WAN/LAN) Interface shall be a 10BASE-T/100BASE-TX Category 6. The ANSI/TIA/EIA 568 wiring method of the RJ-45 outlet shall be as specified in Section 27 10 00 BUILDING TELECOMMUNICATIONS CABLING SYSTEM. The WAN/LAN Interface shall support sensitive data at rated data transmission speeds with DES/3DES encryption, MD5 and SHA-1 hashing, RFC 2402 authentication and meet security features of FIPS 140-2 criteria. The WAN/LAN Interface shall have the following characteristics:

a. 10BASE-T/100BASE-TX, autonegotiation

b. WAN/LAN Connection: RJ-45

c. Cabling: as specified in Section 27 10 00 BUILDING TELECOMMUNICATIONS CABLING SYSTEM

d. Security Protocols: 168-bit 3DES, 56-bit DES, SHA-1, MD5, RFC 2402; up to 75 security associations

e. Network protocols: TCP/IP, ISO 8802-3

2.10.2 RS-232/RS-485

The panel shall support a direct connect via RS-232 or RS-485 connections.

2.11 AUTOMATIC FIRE TRANSMITTERS

2.11.1 Digital Alarm Communicator Transmitter (DACT)

Provide DACT that is compatible with the existing supervising station fire alarm system. Transmitter shall have a means to transmit alarm, supervisory, and trouble conditions via a single transmitter. Transmitter shall have a source of power for operation that conforms to NFPA 72. Transmitter shall be capable of initiating a test signal daily at any selected time. Transmitter shall be arranged to seize telephone circuits in accordance with NFPA 72.

2.11.2 Signals to Be Transmitted to the Installation Receiving Station

The following signals shall be sent to the installation's receiving station:

a. Fire alarm

b. Supervisory

c. Trouble

d. Carbon Monoxide detector

e. Sleeping room smoke detector

2.12 EMERGENCY POWER SUPPLY

Provide emergency power for system operation in the event of primary power source failure. Transfer from normal to auxiliary (secondary) power or restoration from auxiliary to normal power shall be automatic and shall not cause transmission of a false alarm.

2.12.1 Batteries

Provide sealed, maintenance-free, sealed lead acid batteries as the source for emergency power to the CECPs. Batteries shall contain suspended electrolyte. The battery system shall be maintained in a fully charged condition by means of a solid-state battery charger. Provide an automatic

transfer switch to transfer the load to the batteries in the event of the failure of primary power.

2.12.1.1 Capacity

Provide the batteries with sufficient capacity to operate the system under the most demanding of the following conditions.

a. Under supervisory and trouble conditions, including audible trouble signal devices for 48 hours and audible and visual signal appliances under alarm conditions for an additional 15 minutes.

2.12.2 Battery Chargers

Provide a solid-state, fully automatic, variable charging rate battery charger. The charger shall be capable of providing 150 percent of the connected system load and shall maintain the batteries at full charge. In the event the batteries are fully discharged (18 Volts DC), the charger shall recharge the batteries back to 95 percent of full charge within 48 hours. Provide pilot light to indicate when batteries are manually placed on a high rate of charge as part of the unit assembly if a high rate switch is provided.

2.12.3 Battery Cabinets

Locate battery cabinets below the FACU. Battery cabinets shall be installed at an accessible location when standing at floor level. Battery cabinets shall not be installed lower than 12 inches above finished floor. Installing batteries above drop ceilings or in inaccessible locations is prohibited. Battery cabinets shall be large enough to accommodate batteries and also to allow ample gutter space for interconnection of panels as well as field wiring. The enclosure shall be identified by an engraved laminated phenolic resin nameplate. Lettering on the nameplate shall indicate the panel(s) the batteries power and shall not be less than one inch high. The cabinet shall be provided in a sturdy steel housing, complete with back box, hinged steel door with cylinder lock, and surface mounting provisions.

2.13 WIRING

Provide wiring materials under this section as specified in Section 26 20 00 INTERIOR DISTRIBUTION SYSTEM with the additions and modifications specified herein.

2.13.1 Alarm Wiring

The SLC wiring shall be solid copper or stranded wiring as permitted by NFPA 70. Copper signaling line circuits field wiring shall be No. 18 AWG size conductors at a minimum. Initiating device wiring shall be solid copper or stranded wiring and shall be No. 16 AWG size conductors at a minimum. Notification appliance circuit conductors, shall be solid copper or stranded No. 16 AWG size conductors at a minimum. Wire size shall be sufficient to prevent excessive voltage drop. Circuits operating at 24 VDC shall not operate at less than 21.6 volts. Circuits operating at any other voltage shall not have a voltage drop exceeding 10 percent of nominal voltage. Power wiring, operating at 120 VAC minimum, shall be a minimum No. 12 AWG solid copper having similar insulation.

2.14 OVERVOLTAGE AND SURGE PROTECTION

2.14.1 Signaling Line Circuit Surge Protection

For systems having circuits located outdoors, communications equipment shall be protected against surges induced on any signaling line circuit and shall comply with the applicable requirements of IEEE C62.41.1 and IEEE C62.41.2. Cables and conductors, that serve as communications links, shall have surge protection circuits installed at each end that meet the following waveform(s):

a. A 10 microsecond by 1000 microsecond waveform with a peak voltage of 1500 volts and a peak current of 60 amperes.

b. An 8 microsecond by 20 microsecond waveform with a peak voltage of 1000 volts and a peak current of 500 amperes. Protection shall be provided at the equipment. Additional triple electrode gas surge protectors, rated for the application, shall be installed on each wireline circuit within 3 feet of the building cable entrance. Fuses shall not be used for surge protection.

2.14.2 Wiring Surge Protection

Digital and analog inputs and outputs shall be protected against surges induced by sensor wiring installed outdoors and as shown. The inputs and outputs shall be tested with the following waveforms:

a. A 10 by 1000 microsecond waveform with a peak voltage of 1500 volts and a peak current of 60 amperes.

b. An 8 by 20 microsecond waveform with a peak voltage of 1000 volts and a peak current of 500 amperes. Fuses shall not be used for surge protection.

2.15 CEILING BRIDGES

Provide ceiling bridges for ceiling-mounted appliances. Ceiling bridges shall be as recommended/required by the manufacturer of the ceiling-mounted notification appliance.

2.16 BACK BOXES AND CONDUIT

In addition to the requirements of SPECIFICATION SECTION 26 20 00 INTERIOR DISTRIBUTION SYSTEM; provide all wiring in rigid metal conduit or intermediate metal conduit unless specifically indicated otherwise. Minimum size conduit permitted is 1/2 in. Do not use electrical non-metallic tubing (ENT) or flexible non-metallic tubing and associated fittings.

Provide rigid metal back boxes of adequate size and depth as recommended by the manufacturer of the appliance or device installed.

2.17 NOTIFICATION APPLIANCES

2.17.1 Audio Notification Appliance Network

The notification appliance network consists of textual audible appliances (speakers) located to provide intelligible instructions at areas as

indicated on the contract drawings.

2.17.2 Fire Alarm/Mass Notification Speakers

Audible appliances shall conform to the applicable requirements of UL 464. Appliances shall be connected into notification appliance circuits. Surface mounted audible appliances shall be painted white. Recessed audible appliances shall be installed with a grill that is painted white.

a. Textual audible appliances (speakers) shall conform to the applicable requirements of UL 1480.
Speakers shall have six different sound output levels and operate with audio line input levels of 70 Volts AC, and 25 Volts AC, by means of selectable tap settings.

Speaker tap settings shall include taps of 1/4, 1/2, 1, and 2. Speakers shall incorporate a high efficiency speaker for maximum output at minimum power across a frequency range of 400Hz to 4000Hz. Speakers shall have a sealed back construction.

Where speakers and strobes are provided in the same location, they may be combined into a single unit. All inputs shall be polarized for compatibility with standard reverse polarity supervision of circuit wiring via the Fire Alarm Control Unit .

b. Provide speaker mounting plates constructed of cold rolled steel having a minimum thickness of 16 gauge and equipped with mounting holes and other openings as needed for a complete installation. Fabrication marks and holes shall be ground and finished to provide a smooth and neat appearance for each plate. Each plate shall be primed and painted.

Speakers mounted on the exterior of the building, within unconditioned spaces or in the vicinity of showers shall be Listed weather-proof appliances.

2.17.3 Visual Notification Appliances

Visual notification appliances shall conform to the applicable requirements of UL 1971 and conform to the Americans With Disabilities Act (ADA). Fire Alarm/Mass Notification Appliances shall have clear high intensity optic lens, xenon flash tubes, and output white light and be marked "ALERT" in red letters. Appliances with decals or adhesive labels, whether factory or field applied, are prohibited. The light pattern shall be disbursed so that it is visible above and below the strobe and from a 90 degree angle on both sides of the strobe. Strobe flash rate shall be one flash per second and a minimum of 15 candela based on the UL 1971 test. Strobes shall be semi-flush mounted. Provide synchronized operation.

2.17.4 Connections

Provide screw terminals for each notification appliance. Terminals shall

be designed to accept the size conductors used in this project without modification.

2.18 ADDRESSABLE MONITOR MODULE

The initiating device being monitored shall be configured as a Class B initiating device circuits. The system shall be capable of defining any module as an alarm module and report alarm, trouble, loss of polling, or as a supervisory module, and reporting supervisory short, supervisory open or loss of polling such as waterflow switches, valve supervisory switches, fire pump monitoring, independent smoke detection systems, relays for output function actuation, and other similar functions. The module shall be UL or FM listed as compatible with the control panel. The monitor module shall provide address setting means compatible with the control panel's SLC supervision and store an internal identifying code. Monitor module shall contain an integral LED that flashes each time the monitor module is polled. Pull stations with a monitor module in a common backbox are not required to have an LED. LED shall be visible without needing to remove the backbox cover plate.

2.19 ADDRESSABLE CONTROL/RELAY MODULE

The control module shall be capable of operating as a relay (form C contacts) for interfacing the control panel with other systems, and to control door holders or initiate elevator fire service. The module shall be UL or FM listed as compatible with the control panel. The indicating device or the external load being controlled shall be configured as a Class B Pathway. The system shall be capable of supervising, audible, visual and dry contact circuits. The control module shall have both an input and output address. The supervision shall detect a short on the supervised circuit and shall prevent power from being applied to the circuit. Circuit between the module and the equipment/feature controls is permitted be configured as Class D pathways. The pathway is unsupervised but has a fail-safe operation that performs the intended function when the connection is lost.The control model shall provide address setting means compatible with the control panel's SLC supervision and store an internal identifying code. The control module shall contain an integral LED that flashes each time the control module is polled. Control Modules shall be located in environmental areas that reflect the conditions to which they were listed. LED shall be visible without needing to remove the backbox cover plate.

2.20 ISOLATION MODULE

Provide isolation modules to subdivide each Class A signaling line circuit pathway into groups of a maximum of 20 devices but no more than recommended by the equipment manufacturer between adjacent isolation modules. Isolation modules may be modules or combination detector base/isolation module. LED shall be visible without needing to remove the backbox cover plate.

2.21 MANUAL STATIONS

Provide addressable manual pull stations. Manual pull stations shall be metal or plastic, semi-flush mounted, double action, addressable manual stations, that are not subject to operation by jarring or vibration.

Stations shall be equipped with screw terminals for each conductor. Stations that require the replacement of any portion of the device after activation are not permitted. Stations shall be finished in fire-engine red with molded raised lettering operating instructions of contrasting color. The use of a key or wrench shall be required to reset the station. Manual stations shall be mounted at 48 inches. Stations shall have a separate screw terminal for each conductor.

2.22 SMOKE DETECTORS

2.22.1 Photoelectric Smoke Detectors

Provide addressable photoelectric smoke detectors as follows:

a. Provide analog/addressable photoelectric smoke detectors utilizing the photoelectric light scattering principle for operation in accordance with UL 268. Smoke detectors shall be listed for use with the fire alarm control unit.

b. Provide self-restoring type detectors that do not require any readjustment after actuation at the FACU to restore them to normal operation. detectors shall be UL Listed or FM Approved as smoke-automatic fire detectors.

c. Components shall be rust and corrosion resistant. Vibration shall have no effect on the detector's operation. Protect the detection chamber with a fine mesh metallic screen that prevents the entrance of insects or airborne materials. The screen shall not inhibit the movement of smoke particles into the chamber.

d. Provide twist lock bases with sounder that produces a minimum of 90 dBA at 10 feet for the detectors at the locations indicated on the contract drawings. The detectors shall maintain contact with their bases without the use of springs. Provide companion mounting base with screw terminals for each conductor. Terminate field wiring on the screw terminals. The detector shall have a visual indicator to show actuation.

e. The detector address shall identify the particular unit, its location within the system, and its sensitivity setting. detectors shall be of the low voltage type rated for use on a 24 VDC system.

f. An operator at the control panel, having a proper access level, shall have the capability to manually access the following information for each initiating device.

   (1) Primary status

   (2) Device type

   (3) Present average value

   (4) Present sensitivity selected

   (5) detector range (normal, dirty, etc.)

2.22.2 Smoke detector with sounder bases

Provide smoke detectors with sounder bases in dwelling units. Activation

of a dwelling unit smoke detector shall activate a supervisory alarm at the FACU. Dwelling unit smoke detectors are prohibited from activating any general building alarms.

2.22.3 Duct mounted smoke detectors

Provide addressable duct smoke detectors as follows:

Duct-mounted photoelectric smoke detectors shall be furnished and installed where indicated on the contract drawings and in accordance with NFPA 90A. Units shall consist of smoke detectors, as specified in the paragraph titled Photoelectric Smoke Detectors, mounted in a housing fitted with duct sampling tubes. Detectors shall be rated for air velocities that include air flows between 500 and 4000 cubic feet per minute (CFM). Detectors shall be powered from the fire alarm control unit.

a. Sampling tubes shall run the full width of the duct. The duct smoke detector package shall conform to the requirements of NFPA 90A, UL 268A, and shall be UL listed or FM Approved for use in air-handling systems. The control functions, operation, reset, and bypass shall be controlled from the FACU.

b. Lights to indicate the operation and alarm condition; shall be visible and accessible with the unit installed and the cover in place. Detectors mounted above 6 feet and those mounted below 6 feet that cannot be easily accessed while standing on the floor, shall be provided with a remote detector indicator panel containing test switches.

c. Remote lamps and switches, as well as the affected fan units, shall be properly identified in etched plastic placards. Detectors shall provide for control of auxiliary contacts that provide control, interlock, and shutdown functions specified in Section 23 09 00.00 22 INSTRUMENTATION AND CONTROL FOR HVAC. Auxiliary contacts provided for this function shall be located within 3 feet of the controlled circuit or appliance. The detectors shall be supplied by the fire alarm system manufacturer to ensure complete system compatibility.

2.22.4 Smoke Detector Testing

Smoke detectors shall be tested in accordance with NFPA 72 and the manufacturer's recommended calibrated test method.

2.23 Carbon monoxide detector

Provide carbon monoxide (CO) detection where required by NFPA 720 and NFPA 72. Carbon monoxide detectors shall be listed to Underwriters Laboratories UL 2075 for Gas and Vapor Detectors and Sensors. Carbon monoxide detectors shall be listed for use with fire alarm control units. Do not provide CO detectors with local alarms. Detector shall be provided with an LED indicator, LED shall blink green to indicate normal standby, LED shall blink red or turn solid red upon alarm.

Provide analog/addressable carbon monoxide (CO) detectors listed for use with the FACU. For FACU's with no listed compatible addressable CO detectors, provide listed 4-wire carbon monoxide detectors.

Where 4-wire CO detectors are necessary, each 4-wire CO detector shall be individually monitored via addressable interface modules for alarm and off normal/trouble conditions (including loss of power to the individual detector).

Wiring connections shall be made by means of screw terminals and detectors shall be equipped with trouble relays. Detectors shall be able to mount to a single-gang electrical boxes.

A trouble condition at an individual CO detector shall not affect any other CO detectors. CO detectors shall be powered by the FACU. Battery powered and 120 VAC powered detectors are prohibited. Power circuits for 4-wire CO detectors shall be dedicated to powering the CO detectors only.

Detectors shall be provided with a means to test CO gas entry into the CO sensing cell.

2.23.1 Carbon Monoxide Detector Testing

Carbon monoxide detectors shall be tested in accordance with NFPA 720 and the manufacturer's recommended calibrated test method.

2.24 Waterflow switches

a. Provide vane-type waterflow switches for wet pipe sprinkler systems. The device shall contain double pole, double throw contacts. Equip the detector with a pneumatic time delay, field adjustable from 0 to 90 seconds. The time delay shall be set initially to 45seconds. Waterflow switches shall be a UL Listed extinguishing system attachments rated for the particular pressure and location that it is installed. Flow switches shall be equipped with screw terminals for each conductor.

b. Provide pressure type waterflow switches for dry pipe sprinkler systems, pre-action, and deluge systems. The device shall contain double pole, double throw contacts. Equip the detector with a pneumatic time delay, field adjustable from 0 to 90 seconds. The time delay shall be set initially to 45seconds. Waterflow switches shall be a UL Listed extinguishing system attachments rated for the particular pressure and location that it is installed. Flow switches shall be equipped with screw terminals for each conductor.

The Prime Contractor is responsible for coordination between their sub-tier contractors. Flow switches are provided by the sprinkler contractor but shall be included in the submittal package required by this section.

2.25 VALVE MONITOR SWITCHES (TAMPER SWITCHES)

Provide a tamper switch for each fire protection system control valve. Tamper switches shall be a UL Listed extinguishing system attachments for the location and type of valve supervised. The device shall contain double pole, double throw contacts. Operation of the switch shall cause a supervisory signal to be transmitted to the FACU upon not more than two complete turns of the valve wheel or a closure of 10 percent, whichever is less. Tamper switches shall be equipped with screw terminals for each

conductor.

The Prime Contractor is responsible for coordination between their sub-tier contractors. Tamper switches are provided by the sprinkler contractor but shall be included in the submittal package required by this section.

2.26 ENVIRONMENTAL ENCLOSURES OR GUARDS

Environmental enclosures shall be provided to permit Fire Alarm or Mass Notification components to be used in areas that exceed the environmental limits of the listing. The enclosure shall be listed for the device or appliance as either a manufactured part number or as a listed compatible accessory for the UL category the component is currently listed. Guards required to deter mechanical damage shall be either a listed manufactured part or a listed accessory for the category of the initiating device or notification appliance.

2.27 SYSTEM OPERATION

The combination emergency communications system shall be a complete, supervised, noncoded, analog/addressable fire alarm and mass notification system conforming to NFPA 72, UL 864, and UL 2017. The system shall be activated into the alarm mode by actuation of any fire alarm initiating device. The system shall remain in the alarm mode until the initiating device is reset and the fire alarm control panel is reset and restored to normal. The system may be placed in the alert mode by local microphones or remotely from authorized locations/users.

2.27.1 Fire Alarm and Supervisory Initiating Devices

Connect alarm initiating devices to Class A or Class B signal line circuit (SLC) pathways, and install in accordance with NFPA 72.

In accordance with NFPA 72 the number of addresses between isolation modules on a Class A SLC pathway is limited to 50 addresses OR the maximum number of addresses per the manufacturer (most manufacturers limit the number of addresses between isolation modules to 20 addresses.)

a.

b.

c. The system shall operate in the alarm mode upon activation of any fire alarm initiating device. The system shall remain in alarm mode until initiating device(s) are reset and the fire alarm control panel is manually reset and restored to normal. Audible and visual appliances and systems shall comply with NFPA 72. Fire alarm system/mass notification system components requiring power, except for the control panel power supply, shall operate on 24 VDC.

2.27.2 Functions and Operating Features

The system shall provide the following functions and operating features:

a. The Combination Emergency Communications System Panels (CECP) whether

separate or combined Fire Alarm Control Units (FACU) and Autonomous Control Units (ACU), shall provide power, annunciation, supervision, and control for the system. Systems shall be microcomputer (microprocessor or microcontroller) based addressable systems with a minimum word size of eight bits with sufficient memory to perform as specified.

b. Provide Class B initiating device circuit pathways for conductor lengths of 10 feet or less.

c. Provide Class A or B signaling line circuit pathways

d. Provide Class B control circuits. Class D control circuits are permissible when the the intended operation has fail-safe operation. Fail-safe operation is when the intended operation is performed in the event of a pathway failure.

e. Provide Class B notification appliance circuit pathways. Visual alarm notification appliances shall have the flash rates synchronized.

f. Provide alarm verification capability for smoke detectors. Alarm verification shall initially be set for 20 seconds.

g. Provide program capability via switches in a locked portion of the FACU to bypass the automatic notification appliance circuits, air handler shutdown features. Operation of this programming shall indicate this action on the FACU display and system printer output.

h. Alarm, supervisory, and trouble signals shall be automatically transmitted to the fire department.

i. Alarm functions shall override trouble or supervisory functions. Supervisory functions shall override trouble functions.

j. Programmed information shall be stored in non-volatile memory.

k. The system shall be capable of operating, supervising, and/or monitoring both addressable and non-addressable alarm and supervisory devices.

l. There shall be no limit, other than maximum system capacity, as to the number of addressable devices, that may be in alarm simultaneously.

m. Where the fire alarm system is responsible for initiating an action in another emergency control device or system, such as an HVAC system, the addressable fire alarm relay shall be within 3 feet of the emergency control device.

o. An alarm signal shall automatically initiate the following functions:

(1) Transmission of an alarm signal to the fire department .

(2) Visual indication of the device operated on the FACU, . Indication on the annunciator shall be by floor & room number, device address, and device type.

(3) Continuous actuation of all alarm notification appliances.

(4) Recording of the event electronically in the history log of the

FACU.

p. A supervisory signal shall automatically initiate the following functions:

(1) Visual indication of the device operated on the FACU. Indication on the annunciator shall be by floor & room number, device address, and device type.

(2) Sound the audible alarm at the respective panels.

(3) Transmission of a supervisory signal to the fire department.

(4) Recording of the event electronically in the history log of the FACU.

(5) Supervisory signals shall be non-latching.

(4) Operation of a duct smoke detectors shall shut down the appropriate air handler in accordance with NFPA 90A in addition to other requirements of this paragraph.

q. A trouble condition shall automatically initiate the following functions:

(1) Visual indication of the system trouble on the FACU, and sound the audible alarm at the respective panels.

(2) Transmission of a trouble signal to the fire department.

(3) Recording of the event electronically in the history log of the fire control system unit.

(4) Trouble conditions shall be non-latching.

r. Activation of a carbon monoxide detector shall automatically initiate the following functions:

(1) Transmission of a carbon monoxide alarm signal to the fire department.

(2) Visual indication of the device operated on the FACU, . Indication on the annunciator shall be by floor & room number, device address, and device type.

(3) Continuous actuation of all strobes and the audible CO message throughout the building.

(4) Recording of the event electronically in the history log of the FACU.

2.28 SYSTEM MONITORING

2.28.1 Valves

Each valve affecting the proper operation of a fire protection system,

including automatic sprinkler control valves, standpipe control valves, sprinkler service entrance valve, valves at fire pumps, isolating valves for pressure type waterflow or supervision switches, and valves at backflow preventers, whether supplied under this contract or existing, shall be electrically monitored to ensure its proper position. Each tamper switch shall be provided with a separate address.

2.28.2 Independent Fire Detection System

Each existing independent smoke detection subsystem, and kitchen fire extinguishing system shall be monitored both for the presence of an alarm condition and for a trouble condition. Each monitored condition shall be provided with a separate address.

2.29 ELECTRIC POWER

Primary power to combination emergency communications system panels and equipment

Primary power shall be 120 VAC service for the CECPs and equipment Primary power shall be supplied from the AC service to the building. Provide dedicated branch circuit(s) supplying all CECPs & equipment including but not limited to FACU's, ACU's, supplementary power supplies, SNAC panels, LED message control/interface panels, LED Text signs, etc. Branch circuits shall supply no loads other than those associated with the combination emergency communications system. The circuit disconnecting means and all branch-circuit overcurrent protective devices shall be located within a single panel located in the building's main electrical room. The location of the branch-circuit overcurrent protective device shall be permanently identified at the combination emergency communications system panels/enclosures. The circuit disconnecting means shall have red identification, shall be accessible only to qualified personnel, and shall be identified as "FIRE ALARM CIRCUIT." The red identification shall not damage the overcurrent protective devices or obscure the manufacturer's markings. This branch circuit shall not be supplied through ground-fault circuit interrupters or arc-fault circuit-interrupters.

Combination emergency communications system panels and equipment(s) includes, but is not limited to; fire alarm control units (FACU), autonomous control units (ACU), local operating consoles (LOC), supplementary fire alarm control units, supplementary notification appliance circuit panels, auxiliary power supply panels, fire alarm system printers, mass notification system transceivers, fire alarm reporting system transmitters, LED text displays, LED text display control panels, circuits powering the elevator power shunt trip feature, circuits powering computer room power shunt trip feature and circuits powering 120VAC door holders.

PART 3 EXECUTION

3.1 INSTALLATION OF COMBINATION EMERGENCY COMMUNICATIONS SYSTEM EQUIPMENT DEVICES AND APPLIANCES

a. Locate the panels associated with the COMBINATION EMERGENCY COMMUNICATIONS SYSTEM (FACU, ACU, LOC, Amplifiers, SNAC & Auxiliary power supply panels, MNS transmitter and Fire alarm transmitter) where indicated on the contract drawings. Recessed panels with the top of

the cabinet 6 feet above the finished floor or center the panels at 5 feet, whichever is lower. Conductor terminations shall be labeled and a drawing containing conductors, their labels, their circuits, and their interconnection shall be permanently mounted inside the panels.

b. Manual Stations: Locate manual stations where shown on the contract drawings. Mount stations so the operating handles are 4 feet above the finished floor. Mount stations so they are located no more than 5 feet from the exit door they serve, measured horizontally.

c. Notification Appliances: Locate notification appliances where shown on the contract drawings. Mount assemblies on walls 90 inches above the finished floor or 6 inches below the ceiling whichever is lower. Ceiling mounted speakers shall conform to NFPA 72.Provide additional speakers as necessary to meet the intelligibility requirements indicated on the contract drawings.

d. Smoke and Heat detectors: Locate detectors as shown on the contract drawings on a 4 inch mounting box. Detectors located on the ceiling shall be installed not less than 4 inches from a side wall to the near edge. Those located on the wall shall have the top of the detector at least 4 inches below the ceiling, but not more than 12 inches below the ceiling. In raised floor spaces, the smoke detectors shall be installed to protect 225 square feet per detector. Install smoke detectors no closer than 5 feet from air handling supply outlets.

f. Waterflow Switches and Tamper Switches: Locate waterflow switches and tamper switches where shown on the contract drawings.

j. The modification of any fire alarm system and the procedures shall comply with the requirements of NFPA 241.

3.2 SYSTEM FIELD WIRING

3.2.1 Wiring within Cabinets, Enclosures, and Boxes

Provide wiring installed in a neat and workmanlike manner and installed parallel with or at right angles to the sides and back of any box, enclosure, or cabinet. Conductors that are terminated, spliced, or otherwise interrupted in any enclosure, cabinet, mounting, or junction box shall be connected to terminal blocks. Mark each terminal in accordance with the wiring diagrams of the system. Make connections with approved pressure type terminal blocks, that are securely mounted. The use of wire nuts or similar devices shall be prohibited. Wiring shall conform to NFPA 70.

3.2.2 Terminal Cabinets

Provide a terminal cabinet at the base of any circuit riser, on each floor at each riser, and where indicated on the drawings. Terminal size shall be appropriate for the size of the wiring to be connected. Conductor terminations shall be labeled and a drawing containing conductors, their

labels, their circuits, and their interconnection shall be permanently mounted in the terminal cabinet. Minimum size is 8 inches by 8 inches. Terminal strips shall be securely mounted inside. Utilizing tape or glue is not an acceptable means of mounting terminal strips.

3.2.3 Conduit

Minimum conduit size shall be 3/4 inch in diameter except for 1/2 inch drops to individual devices. Conceal conduit in finished areas of new construction and wherever practicable in existing construction. Run conduit or tubing concealed unless specifically shown otherwise on the drawings. Provide an insulated green grounding conductor for all circuit(s) installed in conduit.

a. Galvanized rigid steel (GRS) conduit shall be utilized where exposed to weather, where subject to physical damage, and where exposed on exterior of buildings. Intermediate Metal Conduit (IMC). IMC may be used in lieu of GRS as allowed by NFPA 70.

b. Electrical Metallic Tubing (EMT) is permitted above suspended ceilings or exposed where not subject to physical damage. EMT shall have a factory applied red exterior coating. Do not use EMT underground, encased in concrete, mortar or grout, in hazardous locations, where exposed to physical damage, outdoors or in fire pump rooms. Use die-cast compression connectors.

c. Flexible metal conduit is permitted for initiating device circuits 6 ft length in length or less. Flexible metal conduit is prohibited for notification applaince circuits and siganling line circuits. Use liquidtight flexible metal conduit in damp and wet locations.

d. Schedule 40 (minimum) Polyvinyl Chloride (PVC) is permitted where conduit is routed underground below floor slabs. Convert nonmetallic conduit, other than PVC Schedule 40 or 80, to plastic-coated rigid, or IMC, steel conduit before turning up through floor slab.

3.2.4 Wire

Voltages shall not be mixed in any junction box, housing, or device, except those containing power supplies and control relays. Shielded wiring shall be utilized where recommended by the manufacturer. For shielded wiring, the shield shall be grounded at only one point, that shall be in or adjacent to the FACU. Pigtail or T-tap connections to signal line circuits, initiating device circuits, supervisory alarm circuits, and notification appliance circuits are prohibited. Pull all conductors splice free. Color coding is required for circuits and shall be maintained throughout the circuit. Conductors used for the same functions shall be similarly color coded. Wiring shall conform to NFPA 70.

3.2.5 Conductor Terminations

Label all conductor terminations in panels and equipment associated with the combination emergency communications system (FACU, ACU, LOC, Amplifiers, SNAC & Auxiliary power supply panels, MNS transmitter and Fire alarm transmitter) Each conductor or cable shall have a shrink-wrap label to provide a unique and specific designation. Each combination emergency communications system cabinet and panel shall contain a laminated drawing that indicates each conductor, its label, circuit, and terminal. The laminated drawing shall be neat, using 12 point lettering minimum size,

and mounted within each cabinet, panel, or unit so that it does not interfere with the wiring or terminals. Maintain existing color code scheme where connecting to existing equipment.

3.3 CONNECTION OF NEW SYSTEM

The following new system connections shall be made during the last phase of construction, at the beginning of the preliminary tests. New system connections shall include:

a. Connection of new control modules to existing magnetically held door (hold-open) devices.

b. Connection of new elevator recall control modules to existing elevator controllers.

c. Connection of new system transmitter to existing installation-wide fire reporting system.

Once these connections are made, system shall be left energized and new audio/visual appliances deactivated. Report immediately to the Contracting Officer any coordination and field problems resulting from the connection of the above components.

3.4 FIRESTOPPING

Provide firestopping for conduit penetrations through fire rated floor slabs, walls, partitions, and shaft enclosures in accordance with Section 07 84 00 FIRESTOPPING.

3.5 PAINTING

Paint exposed electrical, fire alarm conduit, and surface metal raceway to match adjacent finishes in exposed areas. In lieu of painting conduit, the contractor may utilize red conduit with a factory applied finish. Paint junction boxes red in unfinished areas. Painting shall comply with Section 09 90 00 PAINTS AND COATINGS.

In unfinished areas, paint all fire alarm conduit, junction boxes and covers red. In lieu of painting conduit, the contractor may utilize red conduit with a factory applied finish.

In finished areas, paint exposed fire alarm conduit, surface metal raceways, junction boxes, and electrical boxes to match adjacent finishes. The inside cover of the junction box must be identified as "Fire Alarm" and the conduit must have painted red bands 3/4 inch wide at 10 foot centers and at each side of a floor, wall, or ceiling penetration.

3.6 FIELD QUALITY CONTROL

3.6.1 Testing Procedures

Submit detailed test procedures prepared and signed by a registered professional engineer (P.E.) who has passed the fire protection engineering written examination administered by the National Council of Examiners for Engineering and Surveys (NCEES).Registered Professional Engineer or a NICET Level 3 Fire Alarm Technician, and signed by representative of the installing company, for the fire detection and alarm system 60 days prior to performing system tests. Detailed test procedures

shall list all components of the installed system such as initiating devices and circuits, notification appliances and circuits, signaling line devices and circuits, control devices/equipment, batteries, transmitting and receiving equipment, power sources/supply, annunciators, special hazard equipment, emergency communication equipment, interface equipment, and transient (surge) suppressors. Test procedures shall include sequence of testing, time estimate for each test, and sample test data forms. The test data forms shall be in a check-off format (pass/fail with space to add applicable test data) and shall be used for the preliminary testing and the acceptance testing. The test data forms shall record the test results and shall:

a. Identify the NFPA Class of pathways for all Initiating Device Circuits (IDC), Notification Appliance Circuits (NAC), Voice Notification System, and Signaling Line Circuits (SLC).

b. Identify each test required by NFPA 72 Test Methods and required test herein to be performed on each component, and describe how this test shall be performed.

c. Identify each component and circuit as to type, location within the facility, and unique identity within the installed system. Provide necessary floor plan sheets showing each component location, test location, and alphanumeric identity.

d. Identify all test equipment and personnel required to perform each test (including equipment necessary for testing smoke detectors using real smoke).

e. Provide space to identify the date and time of each test.

f. Provide space to identify the names and signatures of the individuals conducting and witnessing each test.

3.6.2 Tests Stages

a. Preliminary Testing: Conduct preliminary tests to ensure devices and circuits are functioning properly. Tests shall meet the requirements of paragraph entitled "Minimum System Tests." After preliminary testing is complete, provide a letter certifying the installation is complete and fully operable. The letter shall state each initiating and indicating device was tested in place and functioned properly. The letter shall also state that panel functions were tested and operated properly. The letter shall include the names and titles of the witnesses to the preliminary tests. The Contractor and an authorized representative from each supplier of equipment shall be in attendance at the preliminary testing to make necessary adjustments.

b. Request for Formal Inspection and Tests: Requests for Formal Inspection and Tests shall not be submitted until after the connections to the installation-wide fire reporting system and the installation-wide mass notification system have been completed and fully functional When preliminary tests have been completed and corrections made, submit a signed, dated certificate with a request for formal inspection and tests to the Naval Facilities Engineering Command, MIDLANT, Fire Protection Engineer.

c. Final Testing: Notify the Contracting Officer in writing when the system is ready for final acceptance testing. Submit request for test

at least 15 calendar days prior to the test date. The tests shall be performed in accordance with the approved test procedures in the presence of the Contracting Officer. Furnish instruments and personnel required for the tests. A final acceptance test will not be scheduled until the operation and maintenance (O&M) manuals are furnished to the Contracting Officer and the following are provided at the project site:

(1) The systems manufacturer's technical representative

(2) As-built (red-lined) drawings of the system as actually installed

(3) Megger test results

(4) Loop resistance test results

(5) Complete program printout including input/output addresses

The final tests shall be witnessed by the NAVFAC MIDLANT Fire Protection Engineer. At this time, any and all required tests shall be repeated at their discretion. Following acceptance of the system, as-built drawings and O&M manuals shall be delivered to the Contracting Officer for review and acceptance.

3.6.3 Minimum System Tests

Test the system in accordance with the procedures outlined in NFPA 72, ISO 7240-16, IEC 60268-16. The required tests are as follows:

Demonstrate communications with the supervising station as specified by the Contracting Officer. As a minimum, verify all points are correctly received at the supervising station receiver and automated software system.

Demonstrate communications with the installation-wide mass notification system as specified by the Contracting Officer.

a. Megger Tests: After wiring has been installed, and prior to making any connections to panels or devices, wiring shall be megger tested for insulation resistance, grounds, and/or shorts. Conductors with 300 volt rated insulation shall be tested at a minimum of 250 VDC. Conductors with 600 volt rated insulation shall be tested at a minimum of 500 VDC. The tests shall be witnessed by the Contracting Officer and test results recorded for use at the final acceptance test.

b. Loop Resistance Tests: Measure and record the resistance of each circuit with each pair of conductors in the circuit short-circuited at the farthest point from the circuit origin. The tests shall be witnessed by the Contracting Officer and test results recorded for use at the final acceptance test.

c. Verify the absence of unwanted voltages between circuit conductors and ground. The tests shall be accomplished at the preliminary test with results available at the final system test.

d. Verify that the control unit is in the normal condition as detailed in the manufacturer's O&M manual.

e. Test each initiating and indicating device and circuit for proper

operation and response at the control unit. Smoke detectors shall be tested in accordance with manufacturer's recommended calibrated test method. Use of magnets is prohibited. Testing of duct smoke detectors shall comply with the requirements of NFPA 72.

f. Test the system for specified functions in accordance with the contract drawings and specifications and the manufacturer's O&M manual.

g. Test both primary power and secondary power. Verify, by test, the secondary power system is capable of operating the system for the time period and in the manner specified.

h. Determine that the system is operable under trouble conditions as specified.

i. Visually inspect wiring.

j. Test the battery charger and batteries.

k. Verify that software control and data files have been entered or programmed into the FACU. Hard copy records of the software shall be provided to the Contracting Officer.

l. Verify that red-line drawings are accurate.

m. Measure the current in circuits to ensure there is the calculated spare capacity for the circuits.

n. Measure voltage readings for circuits to ensure that voltage drop is not excessive.

o. Disconnect the verification feature for smoke detectors during tests to minimize the amount of smoke needed to activate the detector. Testing of smoke detectors shall be conducted using real smoke. The use of canned smoke is prohibited.

p. Measure the voltage drop at the most remote appliance (based on wire length) on each notification appliance circuit.

q. Audibility Intelligibility testing of the Voice Evacuation Notification System shall be accomplished in accordance with NFPA 72 for Voice Evacuation Systems, IEC 60268-16, and ASA S3.2.

r. Opening the circuit at not less than all alarm initiating devices and notification appliances to test the wiring supervisory feature.

s. Demonstrate modem communications with remote sites as specified by the Contracting Officer. Dial in capability shall also, be demonstrated, using specified security.

t. Demonstrate fiber optic communications with remote sites as specified by the Contracting Officer. Dial in capability shall also, be demonstrated, using specified security.

3.7 INSTRUCTION OF GOVERNMENT EMPLOYEES

Provide 2 days (16 hours) of onsite instruction after final acceptance of the system. The instruction shall be given during regular working hours on such dates and times as are selected by the Contracting Officer. The

instruction may be divided into two or more periods at the discretion of the Contracting Officer. The training shall allow for rescheduling for unforeseen maintenance and/or fire department responses.

3.7.1 Instructor

Include in the project the services of an instructor, who has received specific training from the manufacturer for the training of other persons regarding the inspection, testing, and maintenance of the system provided. The instructor shall train the Government employees designated by the Contracting Officer, in the care, adjustment, maintenance, and operation of the fire alarm system. Each instructor shall be thoroughly familiar with all parts of this installation. The instructor shall be trained in operating theory as well as in practical O&M work.

3.7.2 Required Instruction Time

Provide 2 days (16 hours) of onsite instruction after final acceptance of the system. The instruction shall be given during regular working hours on such dates and times as are selected by the Contracting Officer. The instruction may be divided into two or more periods at the discretion of the Contracting Officer. The training shall allow for rescheduling for unforeseen maintenance and/or fire department responses.

3.7.3 Technical Data and Computer Software

Provide, in manual format, lesson plans, operating instructions, maintenance procedures, and training data for the training courses. The operations training shall familiarize designated government personnel with proper operation of the installed system. The maintenance training course shall provide the designated government personnel adequate knowledge required to diagnose, repair, maintain, and expand functions inherent to the system.

Any proprietary equipment and proprietary software needed by qualified technicians to implement future changes to the fire alarm system shall be provided as part of this contract. Maintenance software required and provided as part of this contract shall not require any type of annual license agreement or annual cost to continue use of the software. The software that is provided will continue to operate during the entire lifetime of the installed equipment without any additional cost to the Government.

-- End of Section --

THIS PAGE HAS BEEN INTENTIONALLY LEFT BLANK

SECTION 31 05 19

GEOTEXTILE
08/08

PART 1 GENERAL

1.1 MEASUREMENT

Measure the as-built surface area, covered by geotextile, in square yards. Allowance will be made for geotextile in anchor and/or drainage trenches but no allowance will be made for waste, overlaps, damaged materials, repairs, or materials used for the convenience of the Contractor.

1.2 PAYMENT

Geotextile installed and accepted will be paid for at the respective contract unit price in the bidding schedule. This unit price will include the cost of materials, equipment, installation, testing, and other costs associated with placement of the geotextile.

1.3 REFERENCES

The publications listed below form a part of this specification to the extent referenced. The publications are referred to within the text by the basic designation only.

ASTM INTERNATIONAL (ASTM)

ASTM D4354	(2012) Sampling of Geosynthetics for Testing
ASTM D4355/D4355M	(2014) Deterioration of Geotextiles from Exposure to Light, Moisture and Heat in a Xenon-Arc Type Apparatus
ASTM D4491/D4491M	(2017) Standard Test Methods for Water Permeability of Geotextiles by Permittivity
ASTM D4533/D4533M	(2015) Standard Test Method for Trapezoid Tearing Strength of Geotextiles
ASTM D4632/D4632M	(2015a) Grab Breaking Load and Elongation of Geotextiles
ASTM D4751	(2016) Standard Test Method for Determining Apparent Opening Size of a Geotextile
ASTM D4759	(2011; R 2018) Standard Practice for Determining the Specification Conformance of Geosynthetics
ASTM D4873/D4873M	(2017) Standard Guide for Identification, Storage, and Handling of Geosynthetic Rolls and Samples

ASTM D6241 (2014) Standard Test Method for the Static Puncture Strength of Geotextiles and Geotextile-Related Products Using a 50-mm Probe

1.4 SUBMITTALS

Government approval is required for submittals with a "G" designation; submittals not having a "G" designation are for Contractor Quality Control approval. Submittals with an "S" are for inclusion in the Sustainability eNotebook, in conformance to Section 01 33 29 SUSTAINABILITY REPORTING. Submit the following in accordance with Section 01 33 00 SUBMITTAL PROCEDURES:

SD-03 Product Data

Thread
Manufacturing Quality Control Sampling and Testing

SD-04 Samples

Quality Assurance Samples and Tests

SD-07 Certificates

Geotextile

1.5 DELIVERY, STORAGE, AND HANDLING

Deliver, store, and handle geotextile in accordance with ASTM D4873/D4873M.

1.5.1 Delivery

Notify the Contracting Officer a minimum of 24 hours prior to delivery and unloading of geotextile rolls packaged in an opaque, waterproof, protective plastic wrapping. The plastic wrapping shall not be removed until deployment. If quality assurance samples are collected, immediately rewrap rolls with the plastic wrapping. Geotextile or plastic wrapping damaged during storage or handling shall be repaired or replaced, as directed. Label each roll with the manufacturer's name, geotextile type, roll number, roll dimensions (length, width, gross weight), and date manufactured.

1.5.2 Storage

Protect rolls of geotextile from construction equipment, chemicals, sparks and flames, temperatures in excess of 160 degrees F, or any other environmental condition that may damage the physical properties of the geotextile. To protect geotextile from becoming saturated, either elevate rolls off the ground or place them on a sacrificial sheet of plastic in an area where water will not accumulate.

1.5.3 Handling

Handle and unload geotextile rolls with load carrying straps, a fork lift with a stinger bar, or an axial bar assembly. Rolls shall not be dragged along the ground, lifted by one end, or dropped to the ground.

PART 2 PRODUCTS

2.1 RAW MATERIALS

A minimum of 7 days prior to scheduled use, submit manufacturer's certificate of compliance stating that the geotextile meets the requirements of this section. For needle punched geotextiles, the manufacturer shall also certify that the geotextile has been continuously inspected using permanent on-line full-width metal detectors and does not contain any needles which could damage other geosynthetic layers. The certificate of compliance shall be attested to by a person having legal authority to bind the geotextile manufacturer.

2.1.1 Geotextile

Provide geotextile that is a woven pervious sheet of polymeric material consisting of long-chain synthetic polymers composed of at least 95 percent by weight polyolefins, polyesters, or polyamides. The use of woven slit film geotextiles (i.e. geotextiles made from yarns of a flat, tape-like character) will not be allowed. Add stabilizers and/or inhibitors to the base polymer, as needed, to make the filaments resistant to deterioration by ultraviolet light, oxidation, and heat exposure. Regrind material, which consists of edge trimmings and other scraps that have never reached the consumer, may be used to produce the geotextile. Post-consumer recycled material shall not be used. Geotextile shall be formed into a network such that the filaments or yarns retain dimensional stability relative to each other, including the edges. Geotextiles shall meet the requirements specified in Table 1. Where applicable, Table 1 property values represent minimum average roll values (MARV) in the weakest principal direction. Values for AOS represent maximum average roll values.

TABLE 1
MINIMUM PHYSICAL REQUIREMENTS FOR DRAINAGE GEOTEXTILE

PROPERTY	UNITS	ACCEPTABLE VALUES	TEST METHOD
GRAB STRENGTH	LBS	160	ASTM D4632/D4632M
SEAM STRENGTH	LBS		ASTM D4632/D4632M
PUNCTURE	LBS	55	ASTM D6241
TRAPEZOID TEAR	LBS	55	ASTM D4533/D4533M
APPARENT OPENING SIZE	U.S. SIEVE		ASTM D4751
PERMITTIVITY	SEC -1		ASTM D4491/D4491M
ULTRAVIOLET DEGRADATION	PERCENT	50 AT 500 HRS	ASTM D4355/D4355M

2.1.2 Thread

A minimum of 7 days prior to scheduled use, submit proposed thread type for sewn seams along with data sheets showing the physical properties of the thread. Construct sewn seams with high-strength polyester, nylon, or other approved thread type. Thread shall have ultraviolet light stability equivalent to the geotextile and the color shall contrast with the geotextile.

2.2 MANUFACTURING QUALITY CONTROL SAMPLING AND TESTING

The Manufacturer is responsible for establishing and maintaining a quality control program to assure compliance with the requirements of the specification. A minimum of 7 days prior to scheduled use, submit manufacturer's quality control manual. Documentation describing the quality control program shall be made available upon request. Perform manufacturing quality control sampling and testing in accordance with the manufacturer's approved quality control manual. As a minimum, geotextiles shall be randomly sampled for testing in accordance with ASTM D4354, Procedure A. Acceptance of geotextile shall be in accordance with ASTM D4759. Tests not meeting the specified requirements will result in the rejection of applicable rolls.

PART 3 EXECUTION

3.1 QUALITY ASSURANCE SAMPLES AND TESTS

3.1.1 Quality Assurance Samples

Provide assistance to the Contracting Officer in the collection of quality assurance samples for quality assurance testing; assign 7 days in the schedule to allow for testing. Collect samples upon delivery to the site in accordance with ASTM D4354, Procedure B. Lot size for quality assurance sampling shall be considered to be the shipment quantity of the product or a truckload of the product, whichever is smaller. The unit size shall be considered one roll of geotextile. . Identify samples with a waterproof marker by manufacturer's name, product identification, lot number, roll number, and machine direction. The date and a unique sample number shall also be noted on the sample. Discard the outer layer of the geotextile roll prior to sampling a roll. Samples shall then be collected by cutting the full-width of the geotextile sheet a minimum of 3 feet long in the machine direction. Rolls which are sampled shall be immediately resealed in their protective covering.

3.1.2 Quality Assurance Tests

Provide quality assurance samples to an Independent Laboratory. Samples will be tested to verify that geotextile meets the requirements specified in Table 1. Test method ASTM D4355/D4355M shall not be performed on the collected samples. Geotextile product acceptance shall be based on ASTM D4759. Tests not meeting the specified requirements will result in the rejection of applicable rolls.

3.2 INSTALLATION

3.2.1 Subgrade Preparation

The surface underlying the geotextile shall be smooth and free of ruts or protrusions which could damage the geotextile. Subgrade materials and compaction requirements shall be in an undisturbed condition..

3.2.2 Placement

Notify the Contracting Officer a minimum of 24 hours prior to installation of geotextile. Geotextile rolls which are damaged or contain imperfections shall be repaired or replaced as directed. The geotextile shall be laid flat and smooth so that it is in direct contact with the subgrade. The geotextile shall also be free of tensile stresses, folds, and wrinkles. On slopes steeper than 10 horizontal on 1 vertical, lay the geotextile with the machine direction of the fabric parallel to the slope direction.

3.3 SEAMS

3.3.1 Overlap Seams

Continuously overlap geotextile panels a minimum of 12 inches at all longitudinal and transverse joints. Where seams must be oriented across the slope, lap the upper panel over the lower panel. If approved, sewn seams may be used instead of overlapped seams.

3.4 PROTECTION

Protect the geotextile during installation from clogging, tears, and other damage. Damaged geotextile shall be repaired or replaced as directed. Use adequate ballast (e.g. sand bags) to prevent uplift by wind. The geotextile shall not be left uncovered for more than 2 days after installation.

3.5 REPAIRS

Repair torn or damaged geotextile. Clogged areas of geotextile shall be removed. Perform repairs by placing a patch of the same type of geotextile over the damaged area. The patch shall extend a minimum of 12 inches beyond the edge of the damaged area. Patches shall be continuously fastened using approved methods. The machine direction of the patch shall be aligned with the machine direction of the geotextile being repaired. Remove and replace geotextile rolls which cannot be repaired. Repairs shall be performed at no additional cost to the Government

3.6 PENETRATIONS

Construct engineered penetrations of the geotextile by methods recommended by the geotextile manufacturer.

3.7 COVERING

Do not cover geotextile prior to inspection and approval by the Contracting Officer. Place cover soil in a manner that prevents soil from entering the geotextile overlap zone, prevents tensile stress from being mobilized in the geotextile, and prevents wrinkles from folding over onto themselves. On side slopes, soil backfill shall be placed from the bottom of the slope upward. Cover soil shall not be dropped onto the geotextile from a height greater than 3 feet. No equipment shall be operated directly on top of the geotextile without approval of the Contracting Officer. Use equipment with ground pressures less than 7 psi to place the first lift over the geotextile. A minimum of 12 inches of soil shall be maintained between full-scale construction equipment and the geotextile. Cover soil material type, compaction, and testing requirements are

described in Section 31 00 00 EARTHWORK. Equipment placing cover soil shall not stop abruptly, make sharp turns, spin their wheels, or travel at speeds exceeding 5 mph.

-- End of Section --

SECTION 31 23 00.00 20

EXCAVATION AND FILL
02/11

PART 1 GENERAL

1.1 REFERENCES

The publications listed below form a part of this specification to the extent referenced. The publications are referred to in the text by the basic designation only.

AMERICAN WATER WORKS ASSOCIATION (AWWA)

AWWA C600	(2017) Installation of Ductile-Iron Mains and Their Appurtenances

AMERICAN WOOD PROTECTION ASSOCIATION (AWPA)

AWPA C2	(2003) Lumber, Timber, Bridge Ties and Mine Ties - Preservative Treatment by Pressure Processes
AWPA P5	(2015) Standard for Waterborne Preservatives

ASTM INTERNATIONAL (ASTM)

ASTM A139/A139M	(2016) Standard Specification for Electric-Fusion (ARC)-Welded Steel Pipe (NPS 4 and over)
ASTM A252	(2010) Standard Specification for Welded and Seamless Steel Pipe Piles
ASTM C33/C33M	(2018) Standard Specification for Concrete Aggregates
ASTM C136/C136M	(2014) Standard Test Method for Sieve Analysis of Fine and Coarse Aggregates
ASTM D422	(1963; R 2007; E 2014; E 2014) Particle-Size Analysis of Soils
ASTM D698	(2012; E 2014; E 2015) Laboratory Compaction Characteristics of Soil Using Standard Effort (12,400 ft-lbf/cu. ft. (600 kN-m/cu. m.))
ASTM D1140	(2017) Standard Test Methods for Determining the Amount of Material Finer than 75-µm (No. 200) Sieve in Soils by Washing
ASTM D1556/D1556M	(2015; E 2016) Standard Test Method for Density and Unit Weight of Soil in Place by Sand-Cone Method

ASTM D1557	(2012; E 2015) Standard Test Methods for Laboratory Compaction Characteristics of Soil Using Modified Effort (56,000 ft-lbf/ft3) (2700 kN-m/m3)
ASTM D2321	(2018) Standard Practice for Underground Installation of Thermoplastic Pipe for Sewers and Other Gravity-Flow Applications
ASTM D2487	(2017) Standard Practice for Classification of Soils for Engineering Purposes (Unified Soil Classification System)
ASTM D3786/D3786M	(2018) Standard Test Method for Bursting Strength of Textile Fabrics-Diaphragm Bursting Strength Tester Method
ASTM D4318	(2017; E 2018) Standard Test Methods for Liquid Limit, Plastic Limit, and Plasticity Index of Soils
ASTM D4355/D4355M	(2014) Deterioration of Geotextiles from Exposure to Light, Moisture and Heat in a Xenon-Arc Type Apparatus
ASTM D4491/D4491M	(2017) Standard Test Methods for Water Permeability of Geotextiles by Permittivity
ASTM D4533/D4533M	(2015) Standard Test Method for Trapezoid Tearing Strength of Geotextiles
ASTM D4632/D4632M	(2015a) Grab Breaking Load and Elongation of Geotextiles
ASTM D4751	(2016) Standard Test Method for Determining Apparent Opening Size of a Geotextile
ASTM D4759	(2011; R 2018) Standard Practice for Determining the Specification Conformance of Geosynthetics
ASTM D4833/D4833M	(2007; E 2013; R 2013) Index Puncture Resistance of Geotextiles, Geomembranes, and Related Products
ASTM D6938	(2017a) Standard Test Method for In-Place Density and Water Content of Soil and Soil-Aggregate by Nuclear Methods (Shallow Depth)

U.S. ARMY CORPS OF ENGINEERS (USACE)

EM 385-1-1	(2014) Safety and Health Requirements Manual

U.S. ENVIRONMENTAL PROTECTION AGENCY (EPA)

EPA SW-846.3-3 (1999, Third Edition, Update III-A) Test Methods for Evaluating Solid Waste: Physical/Chemical Methods

1.2 DEFINITIONS

1.2.1 Capillary Water Barrier

A layer of clean, poorly graded crushed rock, stone, or natural sand or gravel having a high porosity which is placed beneath a building slab with or without a vapor barrier to cut off the capillary flow of pore water to the area immediately below a slab.

1.2.2 Degree of Compaction

Degree of compaction is expressed as a percentage of the maximum density obtained by the test procedure presented in ASTM D698, for general soil types, abbreviated as percent laboratory maximum density.

1.3 SUBMITTALS

Government approval is required for submittals with a "G" designation; submittals not having a "G" designation are for Contractor Quality Control approval. Submittals with an "S" are for inclusion in the Sustainability eNotebook, in conformance to Section 01 33 29 SUSTAINABILITY REPORTING. Submit the following in accordance with Section 01 33 00 SUBMITTAL PROCEDURES:

SD-01 Preconstruction Submittals

Shoring and Sheeting Plan

Dewatering work plan

Submit 15 days prior to starting work.

SD-06 Test Reports

Borrow Site Testing; G

Fill and backfill test

Select material test

Porous fill test for capillary water barrier

Density tests

Copies of all laboratory and field test reports within 24 hours of the completion of the test.

1.4 DELIVERY, STORAGE, AND HANDLING

Perform in a manner to prevent contamination or segregation of materials.

1.5 CRITERIA FOR BIDDING

Base bids on the following criteria:

a. Surface elevations are as indicated.

b. Pipes or other artificial obstructions, except those indicated, will not be encountered.

c. Ground water elevations indicated by the boring log were those existing at the time subsurface investigations were made and do not necessarily represent ground water elevation at the time of construction. Seasonal perched water table condition will encountered at or near (i.e. within approximately one foot of) the existing ground surface.

e. Material character is indicated by the boring logs.

f. Hard materials will not be encountered . Any additional borrow material required may be obtained from a properly permitted, approved commercial borrow source at the discretion of the Contractor.

g. Suitable backfill and bedding material in the quantities required is not available at the project site

h. Blasting will not be permitted. Remove material in an approved manner.

1.6 REQUIREMENTS FOR OFF SITE SOIL

Soils brought in from off site for use as backfill shall be tested for petroleum hydrocarbons, BTEX, PCBs and HW characteristics (including toxicity, ignitability, corrosivity, and reactivity). Backfill shall not contain concentrations of these analytes above the appropriate State and/or EPA criteria, and shall pass the tests for HW characteristics. Determine petroleum hydrocarbon concentrations by using appropriate State protocols. Determine BTEX concentrations by using EPA SW-846.3-3 Method 5035/8260B. Perform complete TCLP in accordance with EPA SW-846.3-3 Method 1311. Perform HW characteristic tests for ignitability, corrosivity, and reactivity in accordance with accepted standard methods. Perform PCB testing in accordance with accepted standard methods for sampling and analysis of bulk solid samples. Provide borrow site testing for petroleum hydrocarbons and BTEX from a grab sample of material from the area most likely to be contaminated at the borrow site (as indicated by visual or olfactory evidence), with at least one test from each borrow site. For each borrow site, provide borrow site testing for HW characteristics from a composite sample of material, collected in accordance with standard soil sampling techniques. Do not bring material onsite until tests results have been received and approved by the Contracting Officer.

1.7 QUALITY ASSURANCE

1.7.1 Shoring and Sheeting Plan

Submit drawings and calculations, certified by a registered professional engineer, describing the methods for shoring and sheeting of excavations. Drawings shall include material sizes and types, arrangement of members, and the sequence and method of installation and removal. Calculations shall include data and references used.

The Contractor is required to hire a Professional Geotechnical Engineer to provide inspection of excavations and soil/groundwater conditions throughout construction. The Geotechnical Engineer shall be responsible for performing pre-construction and periodic site visits throughout construction to assess site conditions. The Geotechnical Engineer shall update the excavation, sheeting and dewatering plans as construction progresses to reflect changing conditions and shall submit an updated plan if necessary. A written report shall be submitted, at least monthly, informing the Contractor and Contracting Officer of the status of the plan and an accounting of the Contractor's adherence to the plan addressing any present or potential problems. The Geotechnical Engineer shall be available to meet with the Contracting Officer at any time throughout the contract duration.

1.7.2 Dewatering Work Plan

Submit procedures for accomplishing dewatering work.

1.7.3 Utilities

Movement of construction machinery and equipment over pipes and utilities during construction shall be at the Contractor's risk. Excavation made with power-driven equipment is not permitted within two feet of known Government-owned utility or subsurface construction. For work immediately adjacent to or for excavations exposing a utility or other buried obstruction, excavate by hand. Start hand excavation on each side of the indicated obstruction and continue until the obstruction is uncovered or until clearance for the new grade is assured. Support uncovered lines or other existing work affected by the contract excavation until approval for backfill is granted by the Contracting Officer. Report damage to utility lines or subsurface construction immediately to the Contracting Officer.

PART 2 PRODUCTS

2.1 SOIL MATERIALS

2.1.1 Satisfactory Materials

Any materials classified by ASTM D2487 as GW, GP, GM, GP-GM, GW-GM, GC, GP-GC, GM-GC, SW, SP, SM, SC, SP-SM, SP-SC, CL, free of debris, roots, wood, scrap material, vegetation, refuse, soft unsound particles, and frozen, deleterious, or objectionable materials. Unless specified otherwise, the maximum particle diameter shall be one-half the lift thickness at the intended location.

2.1.2 Unsatisfactory Materials

Materials which do not comply with the requirements for satisfactory materials except for insist materials. Unsatisfactory insitu materials include man-made fills, trash, refuse, or uncontrolled backfills from previous construction. Unsatisfactory material also includes material classified as satisfactory which contains appreciable amount of root and/or other organic matter, frozen material, and stones larger than 6 inches. The Contracting Officer shall be notified of any contaminated materials.

2.1.3 Backfill and Fill Material

ASTM D2487, classification GW, GP, GM, SW, SP, SM, SC with a maximum ASTM D4318 liquid limit of 35 , maximum ASTM D4318 plasticity index of 12 ,

and a maximum of 25 percent by weight passing ASTM D1140, No. 200 sieve.

2.1.4 Select Material

Provide materials classified as GW, GP, SW, SP, or SP-SM by ASTM D2487 where indicated. Material shall not have more than 12 percent by weight shall be finer than No. 200 sieve when tested in accordance with ASTM D1140.

2.1.5 Topsoil

Provide as specified in Section 32 92 23 SODDING.

2.2 POROUS FILL FOR CAPILLARY WATER BARRIER

ASTM C33/C33M fine aggregate grading with a maximum of 3 percent by weight passing ASTM D1140, No. 200 sieve, or coarse aggregate Size 57 and conforming to the general soil material requirements specified in paragraph entitled "Satisfactory Materials."

2.3 UTILITY BEDDING MATERIAL

Except as specified otherwise in the individual piping section, provide bedding for buried piping in accordance with AWWA C600, Type 4, except as specified herein. Backfill to top of pipe shall be compacted to 95 percent of ASTM D698 maximum density. Plastic piping shall have bedding to spring line of pipe. Provide ASTM D2321 materials as follows:

a. Class I: Angular, 0.25 to 1.5 inches, graded stone, including a number of fill materials that have regional significance such as coral, slag, cinders, crushed stone, and crushed shells.

b. Class II: Coarse sands and gravels with maximum particle size of 1.5 inches, including various graded sands and gravels containing small percentages of fines, generally granular and noncohesive, either wet or dry. Soil Types GW, GP, SW, and SP are included in this class as specified in ASTM D2487.

2.4 BORROW

Obtain borrow materials required in excess of those furnished from excavations from sources outside of Government property. Material from excavations is suitable for fill placement under parking areas and in green space a minimum of 10 feet away from any current or future structuresObtain borrow materials required in excess of those furnished from excavations from sources outside of Government property.

2.5 BACKFILL FOR UNDERDRAINAGE SYSTEMS

Clean sand, crushed rock, or gravel meeting the following requirements:

a. Perforated or Slotted-Wall Pipe: Backfill meeting requirements of Type I material as specified in Table 1.

b. Open Joint Pipe: backfill consisting of both Type I and Type II materials as specified in Table 1.

c. Blind or French Drains: Backfill consisting of Type II material as

specified in Table 1.

d. Any Type Drain Used With Filter Fabric: Clean gravel or crushed stone or gravel conforming to ASTM C33/C33M coarse aggregate grading size 57, 67, or 7 .

TABLE 1

	Type I Gradation E 11 ASTM C33/C33M	Type II Gradation 57 ASTM C33/C33M	
ASTM D422 Sieve Size	Percent Passing	Percent Passing	
1.5 inches	--	100	
1 inch	--	90 - 100	
3/8 inch	100	25 - 60	
No. 4	95 - 100	5 - 40	
No. 8	--	0 - 20	
No. 16	45 - 80	--	
No. 50	10 - 30	--	
No. 100	0 - 10	--	

2.6 FILTER FABRIC

Provide a pervious sheet of polyester, nylon, glass or polypropylene , ultraviolet resistant filaments woven, spun bonded, fused, or otherwise manufactured into a nonraveling fabric with uniform thickness and strength. Fabric shall have the following manufacturer certified minimum average roll properties as determined by ASTM D4759:

	Class A	Class B
a. Grab tensile strength (ASTM D4632/D4632M) machine and transversed direction	min. 180	80 lbs.
b. Grab elongation (ASTM D4632/D4632M) machine and transverse direction	min. 15	15 percent
c. Puncture resistance (ASTM D4833/D4833M)	min. 80	25 lbs.
d. Mullen burst strength (ASTM D3786/D3786M)	min. 290	130 psi
e. Trapezoidal Tear (ASTM D4533/D4533M)	min. 50	25 lbs.
f. Apparent Opening Size (ASTM D4751)	US Sieve 40	
g. Permeability (ASTM D4491/D4491M)	k fabric greater than k Soil	
h. Ultraviolet Degradation (ASTM D4355/D4355M)	70 percent Strength retained at 150 hours	

2.7 MATERIAL FOR PIPE CASING

2.7.1 Casing Pipe

ASTM A139/A139M, Grade B, or ASTM A252, Grade 2, smooth wall pipe. Casing size shall be of the outside diameter and wall thickness as indicated. Protective coating is not required on casing pipe.

2.7.2 Wood Supports

Treated Yellow Pine or Douglas Fir, rough, structural grade. Provide wood with nonleaching water-borne pressure preservative (ACA or CCA) and treatment conforming to AWPA P5 and AWPA C2, respectively. Secure wood supports to carrier pipe with stainless steel or zinc-coated steel bands.

2.8 MATERIAL FOR RIP-RAP

Rock for erosion control rip-rap shall comform to NCDOT RD Section 1042, Class B.2.8.

2.8.1 Bedding Material

Consisting of sand, gravel, or crushed rock, well graded, with a maximum particle size of 2 inches. Material shall be composed of tough, durable particles. Fines passing the No. 200 standard sieve shall have a plasticity index less than six.

2.9 BURIED WARNING AND IDENTIFICATION TAPE

Polyethylene plastic and metallic core or metallic-faced, acid- and alkali-resistant, polyethylene plastic warning tape manufactured specifically for warning and identification of buried utility lines. Provide tape on rolls, 3 inch minimum width, color coded as specified below for the intended utility with warning and identification imprinted in bold black letters continuously over the entire tape length. Warning and identification to read, "CAUTION, BURIED (intended service) LINE BELOW" or similar wording. Color and printing shall be permanent, unaffected by moisture or soil.

Warning Tape Color Codes	
Red:	Electric
Yellow:	Gas, Oil; Dangerous Materials
Orange:	Telephone and Other Communications
Blue:	Potable Water Systems
Green:	Sewer Systems
White:	Steam Systems
Gray:	Compressed Air
Purple:	Non Potable, Reclaimed Water, Irrigation and Slurry lines

2.9.1 Warning Tape for Metallic Piping

Acid and alkali-resistant polyethylene plastic tape conforming to the width, color, and printing requirements specified above. Minimum thickness of tape shall be 0.003 inch. Tape shall have a minimum strength of 1500 psi lengthwise, and 1250 psi crosswise, with a maximum 350 percent elongation.

2.9.2 Detectable Warning Tape for Non-Metallic Piping

Polyethylene plastic tape conforming to the width, color, and printing requirements specified above. Minimum thickness of the tape shall be 0.004 inch. Tape shall have a minimum strength of 1500 psi lengthwise and 1250 psi crosswise. Tape shall be manufactured with integral wires, foil backing, or other means of enabling detection by a metal detector when tape is buried up to 3 feet deep. Encase metallic element of the tape in a protective jacket or provide with other means of corrosion protection.

2.10 DETECTION WIRE FOR NON-METALLIC PIPING

Detection wire shall be insulated single strand, solid copper with a minimum of 12 AWG.

PART 3 EXECUTION

3.1 PROTECTION

3.1.1 Shoring and Sheeting

Provide shoring as required to accomplished the planned below grade construction activities . In addition to Section 25 A and B of EM 385-1-1 and other requirements set forth in this contract, include provisions in the shoring and sheeting plan that will accomplish the following:

a. Prevent undermining of pavements, foundations and slabs.

b. Prevent slippage or movement in banks or slopes adjacent to the excavation.

c. Allow for the abandonment of shoring and sheeting materials in place in critical areas as the work is completed. In these areas, backfill the excavation to within 3 feet of the finished grade and remove the remaining exposed portion of the shoring before completing the backfill.

3.1.2 Drainage and Dewatering

Provide for the collection and disposal of surface and subsurface water encountered during construction.

3.1.2.1 Drainage

So that construction operations progress successfully, completely drain construction site during periods of construction to keep soil materials sufficiently dry. The Contractor shall establish/construct storm drainage features (ponds/basins) at the earliest stages of site development, and throughout construction grade the construction area to provide positive surface water runoff away from the construction activity and/or provide temporary ditches, swales, and other drainage features and equipment as required to maintain dry soils, prevent erosion and undermining of foundations. When unsuitable working platforms for equipment operation and unsuitable soil support for subsequent construction features develop, remove unsuitable material and provide new soil material as specified herein. It is the responsibility of the Contractor to assess the soil and ground water conditions presented by the plans and specifications and to employ necessary measures to permit construction to proceed. Excavated slopes and backfill surfaces shall be protected to prevent erosion and sloughing. Excavation shall be performed so that the site, the area immediately surrounding the site, and the area affecting operations at the site shall be continually and effectively drained.

3.1.2.2 Dewatering

Groundwater flowing toward or into excavations shall be controlled to prevent sloughing of excavation slopes and walls, boils, uplift and heave in the excavation and to eliminate interference with orderly progress of construction. French drains, sumps, ditches or trenches will not be permitted within 3 feet of the foundation of any structure, except with specific written approval, and after specific contractual provisions for

restoration of the foundation area have been made. Control measures shall be taken by the time the excavation reaches the water level in order to maintain the integrity of the in situ material. While the excavation is open, the water level shall be maintained continuously, at least 2 feet below the working level.

Operate dewatering system continuously until construction work below existing water levels is complete. Submit performance records weekly. Measure and record performance of dewatering system at same time each day by use of observation wells or piezometers installed in conjunction with the dewatering system. Relieve hydrostatic head in previous zones below subgrade elevation in layered soils to prevent uplift.

3.1.3 Underground Utilities

Location of the existing utilities indicated is approximate. The Contractor shall physically verify the location and elevation of the existing utilities indicated prior to starting construction. The Contractor shall scan the construction site with electromagnetic and sonic equipment and mark the surface of the ground where existing underground utilities are discovered.

3.1.4 Machinery and Equipment

Movement of construction machinery and equipment over pipes during construction shall be at the Contractor's risk. Repair, or remove and provide new pipe for existing or newly installed pipe that has been displaced or damaged.

3.2 SURFACE PREPARATION

3.2.1 Clearing and Grubbing

Unless indicated otherwise, remove trees, stumps, logs, shrubs, brush and vegetation and other items that would interfere with construction operations within the clearing limits . Remove stumps entirely. Grub out matted roots and roots over 2 inches in diameter to at least 18 inches below existing surface.

3.2.2 Stripping

Strip suitable soil from the site where excavation or grading is indicated and stockpile separately from other excavated material. Material unsuitable for use as topsoil shall be wasted . Locate topsoil so that the material can be used readily for the finished grading. Where sufficient existing topsoil conforming to the material requirements is not available on site, provide borrow materials suitable for use as topsoil. Protect topsoil and keep in segregated piles until needed.

3.2.3 Unsuitable Material

Remove vegetation, debris, decayed vegetable matter, sod, mulch, and rubbish underneath paved areas or concrete slabs.

3.3 EXCAVATION

Excavate to contours, elevation, and dimensions indicated. Reuse excavated materials that meet the specified requirements for the material type required at the intended location. Provide moisture conditioning of

excavated soil for reuse to adjust moisture content to within 2 percent of the optimum moisture prior to placement. Keep excavations free from water. Excavate soil disturbed or weakened by Contractor's operations, soils softened or made unsuitable for subsequent construction due to exposure to weather. Excavations below indicated depths will not be permitted except to remove unsatisfactory material. Unsatisfactory material encountered below the grades shown shall be removed as directed. Refill with backfill and fill material and compact to 95 percent of ASTM D698 maximum density. Unless specified otherwise, refill excavations cut below indicated depth with backfill and fill material and compact to 95 percent of ASTM D698 maximum density. Satisfactory material removed below the depths indicated, without specific direction of the Contracting Officer, shall be replaced with satisfactory materials to the indicated excavation grade; except as specified for spread footings. Determination of elevations and measurements of approved overdepth excavation of unsatisfactory material below grades indicated shall be done under the direction of the Contracting Officer.

3.3.1 Structures With Spread Footings

Ensure that footing subgrades have been inspected and approved by the Contracting Officer prior to concrete placement. Fill over excavations with concrete during foundation placement.

3.3.2 Pipe Trenches

Excavate to the dimension indicated. Grade bottom of trenches to provide uniform support for each section of pipe after pipe bedding placement. Tamp if necessary to provide a firm pipe bed. Recesses shall be excavated to accommodate bells and joints so that pipe will be uniformly supported for the entire length. Rock, where encountered, shall be excavated to a depth of at least 6 inches below the bottom of the pipe.

3.3.3 Excavated Materials

Satisfactory excavated material required for fill or backfill shall be placed in the proper section of the permanent work required or shall be separately stockpiled if it cannot be readily placed. Satisfactory material in excess of that required for the permanent work and all unsatisfactory material shall be disposed of as specified in Paragraph "DISPOSITION OF SURPLUS MATERIAL."

3.3.4 Final Grade of Surfaces to Support Concrete

Excavation to final grade shall not be made until just before concrete is to be placed. Only excavation methods that will leave the foundation rock in a solid and unshattered condition shall be used. Approximately level surfaces shall be roughened, and sloped surfaces shall be cut as indicated into rough steps or benches to provide a satisfactory bond. Shales shall be protected from slaking and all surfaces shall be protected from erosion resulting from ponding or flow of water.

3.4 SUBGRADE PREPARATION

Unsatisfactory material in surfaces to receive fill or in excavated areas shall be removed and replaced with satisfactory materials as directed by the Contracting Officer. The surface shall be scarified to a depth of 6 inches before the fill is started. Sloped surfaces steeper than 1 vertical to 4 horizontal shall be plowed, stepped, benched, or broken up

so that the fill material will bond with the existing material. When subgrades are less than the specified density, the ground surface shall be broken up to a minimum depth of 6 inches, pulverized, and compacted to the specified density. When the subgrade is part fill and part excavation or natural ground, the excavated or natural ground portion shall be scarified to a depth of 12 inches and compacted as specified for the adjacent fill. Material shall not be placed on surfaces that are muddy, frozen, or contain frost. Compaction shall be accomplished by sheepsfoot rollers, pneumatic-tired rollers, steel-wheeled rollers, or other approved equipment well suited to the soil being compacted. Material shall be moistened or aerated as necessary to provide the moisture content that will readily facilitate obtaining the specified compaction with the equipment used. Minimum subgrade density shall be as specified herein.

3.4.1 Proof Rolling

Proof rolling shall be done on an exposed subgrade free of surface water (wet conditions resulting from rainfall) which would promote degradation of an otherwise acceptable subgrade. After stripping, proof roll the existing subgrade of the building with a fully loaded dump truck loaded or 10 ton roller. Operate the roller in a systematic manner to ensure the number of passes over all areas, and at speeds between 2 1/2 to 3 1/2 miles per hour. When proof rolling under buildings, the building subgrade shall be considered to extend 5 feet beyond the building lines, and one-half of the passes made with the roller shall be in a direction perpendicular to the other passes. Notify the Contracting Officer a minimum of 3 days prior to proof rolling. Proof rolling shall be performed in the presence of the Contracting Officer. Rutting or pumping of material shall be undercut as directed by the Contracting Officer and replaced with fill and backfill material. Bids shall be based on replacing approximately in square yards, with an average depth of 8 inches at various locations.

3.5 SUBGRADE FILTER FABRIC

Place synthetic fiber filter fabric as indicated directly on prepared subgrade free of vegetation, stumps, rocks larger than 2 inches diameter and other debris which may puncture or otherwise damage the fabric. Repair damaged fabric by placing an additional layer of fabric to cover the damaged area a minimum of 3 feet overlap in all directions. Overlap fabric at joints a minimum of 3 feet. Obtain approval of filter fabric installation before placing fill or backfill. Place fill or backfill on fabric in the direction of overlaps and compact as specified herein. Follow manufacturer's recommended installation procedures.

3.6 FILLING AND BACKFILLING

Fill and backfill to contours, elevations, and dimensions indicated. Compact each lift before placing overlaying lift.

3.6.1 Common Fill Placement

Provide satisfactory material for general site areas 10 feet beyond the limits of any surface bearing structurs (i.e. bulidings) and 3 feet beyond the limits of pavement areas. Compact areas not accessible to rollers or compactors with machanical hand tampers. Aerate material excessively moistened by rain to a satisfactory moisture content. Finish to a smooth surface by blading, rolling with a smooth roller, or both.

3.6.2 Backfill and Fill Material Placement

Provide for paved areas and under concrete slabs, except where select material is provided. Place in 8 inch lifts. Do not place over wet or frozen areas. Place backfill material adjacent to structures as the structural elements are completed and accepted. Backfill against concrete only when approved. Place and compact material to avoid loading upon or against the structure.

3.6.3 Select Material Placement

Provide under porous fill of structures not pile supported. Place in 12 inch lifts. Do not place over wet or frozen areas. Backfill adjacent to structures shall be placed as structural elements are completed and accepted. Backfill against concrete only when approved. Place and compact material to avoid loading upon or against structure.

3.6.4 Backfill and Fill Material Placement Over Pipes and at Walls

Backfilling shall not begin until construction below finish grade has been approved, underground utilities systems have been inspected, tested and approved, forms removed, and the excavation cleaned of trash and debris. Backfill shall be brought to indicated finish grade . Where pipe is coated or wrapped for protection against corrosion, the backfill material up to an elevation 2 feet above sewer lines and 1 foot above other utility lines shall be free from stones larger than 1 inch in any dimension. Heavy equipment for spreading and compacting backfill shall not be operated closer to foundation or retaining walls than a distance equal to the height of backfill above the top of footing; the area remaining shall be compacted in layers not more than 4 inches in compacted thickness with power-driven hand tampers suitable for the material being compacted. Backfill shall be placed carefully around pipes or tanks to avoid damage to coatings, wrappings, or tanks. Backfill shall not be placed against foundation walls prior to 7 days after completion of the walls. As far as practicable, backfill shall be brought up evenly on each side of the wall and sloped to drain away from the wall.

3.6.5 Porous Fill Placement

Provide under floor and area-way slabs on a compacted subgrade. Place in 4 inch lifts with a minimum of two passes of a hand-operated plate-type vibratory compactor.

3.6.6 Trench Backfilling

Backfill as rapidly as construction, testing, and acceptance of work permits. Place and compact backfill under structures and paved areas in 6 inch lifts to top of trench and in 6 inch lifts to one foot over pipe outside structures and paved areas.

3.7 BORROW

Where satisfactory materials are not available in sufficient quantity from required excavations, approved borrow materials shall be obtained as specified herein.

3.8 BURIED WARNING AND IDENTIFICATION TAPE

Provide buried utility lines with utility identification tape. Bury tape

12 inches below finished grade; under pavements and slabs, bury tape 6 inches below top of subgrade.

3.9 BURIED DETECTION WIRE

Bury detection wire directly above non-metallic piping at a distance not to exceed 12 inches above the top of pipe. The wire shall extend continuously and unbroken, from manhole to manhole. The ends of the wire shall terminate inside the manholes at each end of the pipe, with a minimum of 3 feet of wire, coiled, remaining accessible in each manhole. The wire shall remain insulated over it's entire length. The wire shall enter manholes between the top of the corbel and the frame, and extend up through the chimney seal between the frame and the chimney seal. For force mains, the wire shall terminate in the valve pit at the pump station end of the pipe.

3.10 COMPACTION

Determine in-place density of existing subgrade; if required density exists, no compaction of existing subgrade will be required.

3.10.1 General Site

Compact underneath areas designated for vegetation and areas outside the 5 foot line of the paved area or structure to 90 percent of ASTM D698 .

3.10.2 Structures, Spread Footings, and Concrete Slabs

Compact top 12 inches of subgrades to 95 percent of ASTM D698 . Compact fill and backfill material to 95 percent of ASTM D698 .

3.10.3 Adjacent Area

Compact areas within 5 feet of structures to 95 percent of ASTM D698 .

3.10.4 Paved Areas

Compact top 12 inches of subgrades to 95 percent of ASTM D698 . Compact fill and backfill materials to 95 percent of ASTM D698 .

3.11 FINISH OPERATIONS

3.11.1 Grading

Finish grades as indicated within one-tenth of one foot. Grade areas to drain water away from structures. Maintain areas free of trash and debris. For existing grades that will remain but which were disturbed by Contractor's operations, grade as directed.

3.11.2 Topsoil and Seed

Provide as specified in Section 32 92 23 SODDING.

3.11.3 Protection of Surfaces

Protect newly backfilled, graded, and topsoiled areas from traffic, erosion, and settlements that may occur. Repair or reestablish damaged grades, elevations, or slopes.

3.12 DISPOSITION OF SURPLUS MATERIAL

No soil from construction sites shall leave Marine Corps Base Camp Lejeune or Marine Corps Air Station property, with the exception of environmental remedial activities. Any surplus soil that cannot be reused on its originating site shall be transported to one of the following locations:

a.Area managed by G-3/5 for reuse on training areas for various maintenance activities:

3.5 acre storage, within TLZ Condor off Verona Loop Road, approximate coordinates 34°38'07.3"N 77°26'41.7"W.

Coordinate with G-3/5 Project Development Specialist, MCIEAST-MCB CAMLEJ at (910) 451-5772 to determine capacity available at the storage location, prior to delivery.

This site operates Monday through Thursday between 0730 and 1500.

b.Area managed by PWD for use as daily cover:Base landfill, located on Piney Green Road, approximate coordinates 34°41'26.9"N 77°19'27.4"W.

Contractor shall provide temporary silt fencing around designated stockpile areas as needed.

Coordinate with Landfill Manager at (910) 451-8666. Landfill use letters will be provided so that deliveries can be tracked.
This site operates Monday through Thursday between 0730 and 1500 and on Friday between 0700 and 1400.

Contact POCs listed above 7 to 10 days in advance to coordinate delivery of material at the storage locations.

Prior to transport, contractors shall screen soil on-site. Particle size shall be limited to 3 inches or less.

All soils will be clear of deleterious organic debris such as roots and timber, and construction debris. Construction debris shall include, but is not limited to: wood, plastic, glass, concrete, brick, and metal.

Upon each delivery to the storage areas, Contractor shall mobilize a bulldozer to the disposal location and assist the Government by the stacking of material. Subsequently, Contractor shall then provide the following items to the Contracting Officer for review and approval:

1) Photographic documentation, with timestamp, of stockpiled soil.
2) Certification statement indicating volume, in cubic yards (CY), of material delivered and confirming material is free of contaminants.

NOTE: Soil contaminated with debris or chemicals cannot be disposed at the stockpile locations. If contaminated soils are suspected or confirmed through presence of UXO, odors, or visual staining, affected soils must be properly tested, manifested, and disposed of in accordance with RCRA regulations.
Contact Base EMD, ER Program Manager, for more information.

3.13 FIELD QUALITY CONTROL

3.13.1 Sampling

Take the number and size of samples required to perform the following tests.

3.13.2 Testing

Perform one of each of the following tests for each material used. Provide additional tests for each source change.

3.13.2.1 Fill and Backfill Material Testing

Test fill and backfill material in accordance with ASTM C136/C136M for conformance to ASTM D2487 gradation limits; ASTM D1140 for material finer than the No. 200 sieve; ASTM D4318 for liquid limit and for plastic limit; ASTM D698 or ASTM D1557 for moisture density relations, as applicable.

3.13.2.2 Select Material Testing

Test select material in accordance with ASTM C136/C136M for conformance to ASTM D2487 gradation limits; ASTM D1140 for material finer than the No. 200 sieve; ASTM D698 or ASTM D1557 for moisture density relations, as applicable.

3.13.2.3 Porous Fill Testing

Test porous fill in accordance with ASTM C136/C136M for conformance to gradation specified in ASTM C33/C33M.

3.13.2.4 Density Tests

Test density in accordance with ASTM D1556/D1556M, or ASTM D6938. When ASTM D6938 density tests are used, verify density test results by performing an ASTM D1556/D1556M density test at a location already ASTM D6938 tested as specified herein. Perform an ASTM D1556/D1556M density test at the start of the job, and for every 10 ASTM D6938 density tests thereafter. Test each lift at randomly selected locations every 2000 square feet of existing grade in fills for structures and concrete slabs, and every 2500 square feet for other fill areas and every 2000 square feet of subgrade in cut. Include density test results in daily report.

Bedding and backfill in trenches: One test per 50 linear feet in each lift.

-- End of Section --

THIS PAGE HAS BEEN INTENTIONALLY LEFT BLANK

SECTION 31 31 16.13

CHEMICAL TERMITE CONTROL
08/16

PART 1 GENERAL

1.1 REFERENCES

The publications listed below form a part of this specification to the extent referenced. The publications are referred to within the text by the basic designation only.

U.S. DEPARTMENT OF DEFENSE (DOD)

DODI 4150.07 (2008; Change 1-2017; Change 2-2018) DOD Pest Management Program

1.2 ADMINISTRATIVE REQUIREMENTS

Coordinate work related to final grades, landscape plantings, foundations, or any other alterations to finished construction which might alter the condition of treated soils with this specification.

1.3 SUBMITTALS

Government approval is required for submittals with a "G" designation; submittals not having a "G" designation are for Contractor Quality Control approval. Submittals with an "S" are for inclusion in the Sustainability eNotebook, in conformance with Section 01 33 29 SUSTAINABILITY REPORTING. Submit the following in accordance with Section 01 33 00 SUBMITTAL PROCEDURES:

SD-01 Preconstruction Submittals

Termiticide Application Plan; G

SD-03 Product Data

Termiticides

SD-05 Design Data

Mixing Formulation

SD-06 Test Reports

Soil Moisture

Calibration Test

SD-07 Certificates

Qualifications; G

Foundation Exterior

Utilities and Vents

Crawl and Plenum Air Spaces

List of Equipment

SD-08 Manufacturer's Instructions

Termiticides

SD-11 Closeout Submittals

Verification of Measurement

Warranty

Pest Management Report

1.4 QUALITY CONTROL

1.4.1 Regulatory Requirements

Comply with DODI 4150.07 for requirements on Contractor's licensing, certification, and record keeping. Maintain daily records using the Pest Management Maintenance Record, DD Form 1532-1, or a computer generated equivalent, and submit copies of records when requested by the Contracting Officer. These forms may be obtained from the main web site: http://www.dtic.mil/whs/directives/forms/eforms/dd1532-1.pdf

1.4.2 Qualifications

For the application of pesticides, use the services of an applicator whose principal business is pest control. The applicator must be commercially certified in the state where the work is to be performed as required by DODI 4150.07. Termiticide applicators must also be certified in the U.S. Environmental Protection Agency (EPA) pesticide applicator category which includes structural pest control. Submit a copy of the pest control business license and pesticide applicator certificates.

1.4.3 Safety Requirements

Formulate, treat, and dispose of termiticides and their containers in accordance with label directions. Draw water for formulating only from sites designated by the Contracting Officer, and fit the filling hose with a backflow preventer meeting local plumbing codes or standards. Perform filling operations under the direct and continuous observation of a contractor's representative to prevent overflow. Secure pesticides and related materials under lock and key when unattended. Ensure that proper protective clothing and equipment are worn and used during all phases of termiticide application. Dispose of used pesticide containers off Government property.

1.5 DELIVERY, STORAGE, AND HANDLING

1.5.1 Delivery

Deliver termiticide material to the site in the original unopened containers bearing legible labels indicating the EPA registration number, manufacturer's registered uses and in new or otherwise good condition as supplied by the manufacturer or formulator.

1.5.2 Inspection

Inspect termiticides upon arrival at the job site for conformity to type and quality in accordance with paragraph TERMITICIDES. Each label must bear evidence of registration under the Federal Insecticide, Fungicide, and Rodenticide Act (FIFRA), as amended or under appropriate regulations of the host county. Inspect other materials for conformance with specified requirements. Remove unacceptable materials from the job site.

1.5.3 Storage

Storage of pesticides on the installation will not be permitted unless it is written into the contract.

1.5.4 Handling

Handle and mix termiticides in accordance with the manufacturer's label and SDS, preventing contamination by dirt, water, and organic material. Protect termiticides from weather elements as recommended by the manufacturer's label and SDS. Spill kits must be maintained on pest control vehicles and must be available at the mixing site. Conduct termiticide mixing in an area with adequate spill containment.

1.6 SITE CONDITIONS

The following site conditions determine the acceptable time of application.

1.6.1 Soil Moisture

Test soils to be treated immediately before application. Test soil moisture content to a minimum depth of 3 inches. The soil moisture must be as recommended by the termiticide manufacturer. Application of thetermiticide is not permitted when soil moisture content exceeds manufacturer's recommendations.

1.6.2 Runoff and Wind Drift

Application of termiticide will not be permitted during or immediately following heavy rains, when conditions may allow runoff, or create an environmental hazard or when average wind speed exceeds 10 miles per hour. Termiticide is not permitted to enter water systems, aquifers, or endanger humans or animals.

1.7 WARRANTY

Provide a 5 year written warranty against infestations or reinfestations by subterranean termites of the buildings or building additions constructed under this contract. Include in the warranty annual inspections of the buildings or building additions during the warranty period. If live subterranean termite infestation or subterranean termite damage is discovered during the warranty period, and the soil and building conditions have not been altered in the interim:

a. Retreat the site and perform other treatment as may be necessary for elimination of subterranean termite infestation;

b. Repair damage caused by termite infestation; and

c. Reinspect the building approximately 180 days after the re-treatment.

PART 2 PRODUCTS

2.1 SYSTEM DESCRIPTION

Chemical termite control uses liquid termiticide treatments applied to the soil to form a continuous chemical barrier in the soil around both sides of the foundation. The application can be surface applied or rodded and trenched. This barrier prevents foraging termites from reaching the foundation and piers. Only the soil adjacent to these foundation elements is treated. For slab construction (including foundations, patios and garages), the entire soil (or gravel) surface is treated before the vapor barrier is installed and the slab poured over it. Soil treatment is coordinated with all building activities from foundation construction through final grading of the soil around the building's exterior. In order for the treatment to be effective, the final phase of the application must be done after final grading and sometimes after landscaping is completed so that the treated soil is not disturbed.

2.2 MATERIALS

2.2.1 Termiticides

Provide termiticides currently registered by the EPA or approved for such use by the appropriate agency of the host county and as approved by the Contracting Officer. Select non-repellant termiticides for maximum effectiveness and duration after application. Select a termiticide that is suitable for the soil and climatic conditions at the project site and apply at the highest labeled rate. Submit manufacturer's label and Safety Data Sheet (SDS) for termiticides proposed for use.

PART 3 EXECUTION

3.1 PREPARATION

Eliminate food sources by removing debris from clearing and grubbing and post construction wood scraps such as ground stakes, form boards, and scrap lumber from the site, before termiticide application begins.

3.1.1 Verification

Before work starts, verify that final grades are as indicated and smooth grading has been completed in accordance with Section 31 00 00 EARTHWORK. Finely grade soil and remove particles larger than 1 inch. Compact soil particles to eliminate soil movement.

3.1.2 Foundation Exterior

If the exterior perimeter treatment is applied when the horizontal barrier is applied it will be damaged or removed before construction is completed. The exterior foundation perimeter treatment will have to occur in phases when any pads, porches, aprons, sidewalks, final grading or landscape planting are simultaneously involved adjacent to the building foundation. This treatment area should be coordinated after all major construction but before any pads, porches, or other items requiring special consideration are poured adjacent to the foundation walls. Submit written verification that final grading, landscape planting and other items adjacent to the foundation will not disturb treatment of the soil on

the exterior sides of foundation walls, grade beams, and similar structures.

3.1.3 Utilities and Vents

Turn off and block HVAC ducts and vents located in treatment area prior to application, to protect people and animals from termiticide. Submit written verification that the HVAC ducts and vents, water and sewer lines, and plumbing have been turned off or blocked prior to applying termiticide.

3.1.4 Crawl and Plenum Air Spaces

Submit written verification that crawl and plenum air spaces have been located and identified prior to applying termiticide.

3.1.5 Application Plan

Prior to commencing application of termiticide, submit a Termiticide Application Plan addressing the following items:

a. proposed sequence of treatment work including dates and times of application
b. termiticide trade name
c. EPA registration number
d. chemical composition
e. concentration of original and diluted material
f. formulation
g. manufacturer's recommended application rates
h. regional requirements
i. application rate of active ingredients
j. method of application
k. area or volume to be treated
l. amount to be applied
m. copy of the pest control business license
n. copy of the pesticide applicator certificates

3.2 APPLICATION

For areas to be treated, establish complete and unbroken vertical and horizontal soil poison barriers between the soil and all portions of the intended structure which may allow termite access to wood and wood related products. Make applications to crawl spaces in accordance with label directions. Applications to crawl space areas that are used as plenum air spaces will not be permitted.

3.2.1 Equipment Calibration and Tank Measurement

Submit a list of equipment to be used. Conduct calibration test on the application equipment to be used immediately prior to commencement of termiticide application. Measure the volume and contents of the application tank. Testing must confirm that the application equipment is operating within the manufacturer's specifications and meets the specified requirements. Submit written certification of the equipment calibration test results within 1 week of testing. Where results from the equipment calibration and tank measurements tests are unsatisfactory, re-treatment will be required.

3.2.2 Mixing and Application

Perform all work related to formulating, mixing, and application in the

presence of the Contracting Officer and a DOD certified pesticide applicator, Pest Management QAE/PAR, or Integrated Pest Management Coordinator. Submit mixing formulation:

a. Quantity of pesticide used.

b. Rate of dispersion.

c. Percent of use.

d. Total amount used.

A closed system is recommended as it prevents the termiticide from coming into contact with the applicator or other persons. Only use water from designated locations. Fit filling hoses with a backflow preventer meeting local plumbing codes or standards. Prevent overflow during the filling operation. Spill kits must be maintained on pest control vehicles and must be available at the mixing site. Termiticide mixing must be conducted in an area that has been designated by the Government representative and that has adequate spill containment. Inspect the application equipment for applying termiticides prior to each day of use for leaks, clogging, wear, or damage. Immediately perform repairs on the application equipment to prevent or eliminate leaks and clogging.

3.2.2.1 Application Method

3.2.2.1.1 Surface Application

Use surface application for establishing horizontal barriers. Apply surface applicants as a coarse spray and provide uniform distribution over the soil surface. Termiticide must penetrate a minimum of 1 inch into the soil, or as recommended by the manufacturer. If soils are treated to a depth less than specified or approved, repeat work performed to the depth specified at no additional cost to the Government.

3.2.2.1.2 Rodding and Trenching

Use rodding and trenching for establishing vertical soil barriers. Trenching must be to the depth of the foundation footing. Width of trench must be as recommended by the manufacturer, or as indicated. Rodding or other approved method may be implemented for saturating the base of the trench with termiticide. Backfill the trench immediately after termiticide has reached maximum penetration as recommended by the manufacturer. If maximum penetration is not achieved, as recommended by the manufacturer, repeat work performed to maximum penetration as recommended by the manufacturer at no additional cost to the Government. Backfill in 6 inch rises or layers. Treat each rise or layer with termiticide.

3.2.3 Sampling

The Contracting Officer may draw samples for analysis, at any time and without prior notice, from stocks at the job site to determine if the amount of active ingredient specified on the label is being applied. When analysis, performed by the Government, indicates samples contain less than the amount of active ingredient specified on the label, repeat work performed with pesticides conforming to this specification at no additional cost to the Government.

3.2.4 Vapor Barriers and Waterproof Membranes

Apply termiticide prior to placement of a vapor barrier or waterproof membrane.

3.2.5 Placement of Concrete

Place concrete covering treated soils as soon as the termiticide has reached maximum penetration into the soil as recommended by the manufacturer.

3.2.6 Clean Up, Disposal, And Protection

Once application has been completed, proceed with clean up and protection of the site without delay.

3.2.6.1 Clean Up

Clean the site of all material associated with the treatment measures, according to label instructions, and as indicated. Remove and dispose of excess and waste material off Government property.

3.2.6.2 Disposal of Termiticide

Dispose of residual termiticides and containers off Government property, and in accordance with label instructions and EPA criteria.

3.3 FIELD QUALITY CONTROL

3.3.1 Verification of Measurement

Once termiticide application has been completed, measure tank contents to determine the remaining volume. The total volume measurement of used contents for the application must equal the application rate established in the application plan. Submit written verification that the volume of termiticide used meets the application rate established in the application plan.

3.3.2 Inspection

3.3.2.1 Technical Representative

Provide a technical representative who is a DOD certified pesticide applicator or Pest Management Quality Assurance Evaluator (QAE)/Performance Assessment Representative (PAR). The technical representative must be present at all meetings concerning treatment measures for subterranean termites and during treatment application. Contact the Integrated Pest Management Coordinator prior to starting work.

3.4 CLOSEOUT ACTIVITIES

Upon completion of this work, submit the Pest Management Report DD Form 1532, or an equivalent computer product, to the Integrated Pest Management Coordinator. This form identifies the target pest, type of operation, brand name and manufacturer of pesticide, formulation, concentration or rate of application used.

3.5 PROTECTION

3.5.1 Protection of Treated Area

Immediately after the application, protect the area from other use by erecting barricades as required or directed. Provide signage in accordance with Section 10 14 00.10 EXTERIOR SIGNAGE. Place signage inside the entrances to crawl spaces and identify the space as treated with termiticide and not safe for children or animals. Cover treated areas with plastic if slab is not to be poured immediately following termiticide application.

3.5.2 Disturbance of Treated Soils

Re-treat soil and fill material disturbed after treatment before placement of slabs or other covering structures.

-- End of Section --

SECTION 31 31 16.19

TERMITE CONTROL BARRIERS
02/16

PART 1 GENERAL

1.1 REFERENCES

The publications listed below form a part of this specification to the extent referenced. The publications are referred to within the text by the basic designation only.

ASTM INTERNATIONAL (ASTM)

ASTM A478	(1997; R 2019) Standard Specification for Chromium-Nickel Stainless Steel Weaving and Knitting Wire
ASTM A580/A580M	(2018) Standard Specification for Stainless Steel Wire
ASTM C128	(2015) Standard Test Method for Density, Relative Density (Specific Gravity), and Absorption of Fine Aggregate
ASTM C131/C131M	(2014) Standard Test Method for Resistance to Degradation of Small-Size Coarse Aggregate by Abrasion and Impact in the Los Angeles Machine
ASTM C136/C136M	(2014) Standard Test Method for Sieve Analysis of Fine and Coarse Aggregates

1.2 ADMINISTRATIVE REQUIREMENTS

1.2.1 Pre-Installation Meetings

Convene a pre-installation meeting at least one week prior to beginning installation to review conditions of preparation, storage and handling, installation procedures, sequencing, protection, and coordination with other related work. The project superintendent, installer, installer's crew leader, and representatives of the trades affected by this work are required to attend. Notify the Contracting Officer at least 10 calendar days before the meeting.

1.3 SUBMITTALS

Government approval is required for submittals with a "G" designation; submittals not having a "G" designation are for Contractor Quality Control approval. Submittals with an "S" are for inclusion in the Sustainability eNotebook, in conformance to Section 01 33 29 SUSTAINABILITY REPORTING. Submit the following in accordance with Section 01 33 00 SUBMITTAL PROCEDURES:

SD-02 Shop Drawings

Steel Mesh Shop Drawings; G

Basaltic Sand Shop Drawings; G

SD-03 Product Data

Steel Mesh Materials

Accessories

Steel Mesh System

Written Warranty

SD-04 Samples

Steel Mesh Materials; G

SD-06 Test Reports

Basaltic Sand; G

SD-07 Certificates

System Installers

Steel Mesh Materials

Written Verification

SD-08 Manufacturer's Instructions

Manufacturer's Installation Instruction Manual

Manufacturer's Guidance

Manufacturer's Installation Instructions

SD-09 Manufacturer's Field Reports

Site Conditions

SD-11 Closeout Submittals

Written Warranty

1.4 QUALITY CONTROL

1.4.1 Qualifications

a. Only employee system installers trained in the behavior of termites and installation techniques of the mesh barrier, and accredited by the system's manufacturer. Submit certification that system installers meet the requirements specified and for the effective time period of accreditation.

b. Only employ workers trained and accredited at the appropriate level by the system's manufacturer.

1.5 DELIVERY, STORAGE, AND HANDLING

Deliver materials to the site in original, unbroken packaging and containers, with original labels in place, to include any U.S. Environmental Protection Agency (EPA) designation. Store materials in conformance with system manufacturer's recommendations.
Store and handle the material so as to prevent contamination by dirt, water, and organic material.

1.6 SITE CONDITIONS

1.6.1 Environmental Requirements

In addition to the manufacturer's installation instructions and before placing material, ensure project site is free from standing water.

1.7 WARRANTY

Furnish a 5-year written warranty against infestations or re-infestation by subterranean termites of the buildings or building additions constructed under this contract. Written warranty must be jointly signed by an officer of the Contractor and the supplier. Perform annual inspections of the buildings or building additions. If live subterranean termite infestation or subterranean termite damage is discovered during the warranty period, and building conditions have not been altered in the interim, take the following actions:

a. Correct defective steel mesh basaltic sand installation and perform other treatment as may be necessary to eliminate subterranean termite infestation.

b. Repair damage caused by termite infestation.

c. Reinspect the building approximately 180 calendar days after the repair.

PART 2 PRODUCTS

2.1 SYSTEM DESCRIPTION

2.1.1 Steel Mesh System Description

A complete termite control barrier system encompasses a fine steel mesh placed across all termite entry points to the building. Principal entry points include all cracks, joints, penetrations and other termite entry points within the concrete slabs and cavities in walls. The steel mesh and fastening system physically prevents the termites from entering the building. The mesh is too fine for the termites to squeeze through, too hard to chew through, and highly corrosion resistant for future break down.

2.1.2 Basaltic Sand System Description

A complete termite control barrier system encompasses a graded basaltic sand as a physical barrier below the concrete slab or foundation of a structure to prevent the entry of Formosan ground termites into wood components of the structure, similar to laying down a chemical barrier of soil termiticide treatments. The use of this preventive measure does not preclude the use of other preventive measures such as chemical treatment, steel mesh barrier system and pressure treated lumber for construction to provide maximum protection to the structure. In fact, it is recommended

that this material be used in conjunction with chemical treatments of vulnerable areas such as around electrical conduits, plumbing pipes that penetrate the slab, and the shoulder portions of the barrier and with pressure treated lumber to provide maximum protection to the structure.

2.2 MATERIALS

2.2.1 Asbestos Prohibition

No asbestos containing materials or equipment are permitted at the job site. Ensure materials proposed for the project are asbestos free.

2.2.2 Steel Mesh Materials

Provide stainless steel mesh that conform to ASTM A478 and ASTM A580/A580M, Type A1AA marine grade 316 stainless steel mesh of 0.007 inches diameter wire with mesh openings of 0.026 by 0.018 inches.

2.2.2.1 Steel Mesh Material Submittals

Submit statements signed by responsible officials of the manufacturer of material attesting that material meets specification requirements. These statements must be dated after award of the project contract and clearly name the project.

Submit samples of steel mesh materials. Provide 4 by 4 inches samples of steel mesh to be used in this work.

2.2.3 Accessories

Provide parging adhesives, bonding cement, high grade stainless steel clamps, ties, and other accessories as recommended by system's manufacturer.

2.2.4 Basaltic Sand

Provide clean, dry sand material manufactured from crushed basalt rock that meets the following requirements.

a. Material gradation, ASTM C136/C136M.

Sieve Size	Percent Passing
No. 4	100
No. 8	95-100
No. 10	75-95
No. 12	35-50
No. 16	1-10

b. Specific gravity, ASTM C128, 2.80.

c. Silica (S102) content, 45 percent.

d. Abrasion loss, after 500 revolutions, 20 percent, when tested in accordance with ASTM C131/C131M.

PART 3 EXECUTION

3.1 EXAMINATION

Examine the substrates and conditions under which work of this section will be performed. Coordinate with this specification all work related to final grades, landscape plantings, foundations, or any other alternations to finished construction that might alter the condition of the site. Do not proceed until any unsatisfactory conditions detrimental to timely and proper completion of the work have been corrected. Submit written verification that site conditions are as required and other site work will not disturb the installation.

3.2 PREPARATION

In addition to the manufacturer's requirements and before placing material, remove any visible plant roots, construction wood scraps such as ground stakes, form boards, and scrap lumber, and standing water from the excavated area. Inspect the utility trenches to ensure they are sufficiently wide to permit adequate cover under, around, and over pipes and conduit that will be encapsulated with the basaltic sand materials. In addition, inspect the foundation perimeter to ensure there is sufficient room between the sides of the excavations and the edges of the foundations to provide the required barrier depth and width.
Provide finished or temporary site grading to remove standing water from the project site (i.e., excavated areas or adjacent areas). Grading must provide positive drainage towards temporary, new or existing drainage features. Grading must not result in low spots that hold water or direct water towards new or existing facilities.

3.2.1 Surface Preparation

Perform work related to final grades, landscape plantings, foundations, or any other operations that might alter the condition of the site, in accordance with this specification. Before installing the steel mesh, ensure that the following have been completed:

a. Eliminate termite food sources by removing wood debris, such as ground stakes, form boards, and scrap lumber from the work area.

b. The work area has been filled with finely graded soil consisting of particle sizes no larger than 1 inch and compacted to eliminate soil movement. Ensure the site conditions meet the manufacturer's recommendations for installing the steel mesh.

c. Footings, foundations, and outer forms are in place.

d. Penetrating pipes for communications, electrical, and plumbing are in place.

e. Submit site conditions certificate documenting that the site conditions are acceptable for the steel mesh barrier system.

3.3 INSTALLATION

Install a basaltic sand system in accordance with the manufacturer's installation instructions.

Submit basaltic sand shop drawings of the basaltic sand installation at all interior and perimeter foundations, joints, and penetration conditions to the Contracting Officer for approval before installation.

3.3.1 Steel Mesh Instructions

Strictly follow the manufacturer's instructions published in Manufacturer's Installation Instruction Manual. In addition to the system manufacturer's instructions, place the stainless steel mesh across all openings, joints, penetrations, and other termite entry points to the building (including all shrinkage cracks in concrete slabs and built penetrations in slabs and walls that termites may use for access points)and in accordance with manufacturer's recommendations. Clamp, parge adhere, bond, or embed the steel mesh to the material surrounding the opening in accordance with the manufacturer's recommendations. Install with no gaps, penetrations, or damage to the mesh system. Submit steel mesh shop drawings of the termite steel mesh installation at all perimeter foundations, joints, and penetration conditions to the Contracting Officer for approval before installation.

To avoid an electrolytic reaction, do not place dissimilar metals in contact with the steel mesh.

3.3.1.1 Installation Sequence

a. Install the steel mesh barrier in accordance with the manufacturer's recommendations. Fit and clamp the mesh around all pipe penetrations, and terminate the mesh at the perimeters, as appropriate for the building construction and as described in the manufacturer's installation manual. Lap joint the mesh 0.39 to 0.59 inches and the joint may be strengthened by using bonding cement for a minimum distance of 20 inches along the joint.

b. Install special fittings that are appropriate to the construction, as described in manufacturer's installation manual.

c. Following installation of mesh and vapor barrier, install reinforcing steel and concrete, as specified under other sections. Seal penetrations and shrinkage cracks through concrete slabs in accordance with manufacturer's recommendations.

d. To maintain resistance to termites, complete the system and do not disturb, penetrate, or damage during the remaining contract time period.

3.3.1.2 Steel Mesh Integration

Where required, integrate mesh into subsequent construction, as described in manufacturer's installation manual.

3.3.2 Placement

Place the basaltic sand barrier under slabs, in utility trenches, along edges of concrete pavement, in concrete masonry unit (CMU) cells, along retaining walls, and other areas that termites may use for access points and in accordance with manufacturer's recommendations.

Place material in one lift for thicknesses of 6 inches or less and in successive lifts of 4 to 6 inches where the indicated thickness is greater than 6 inches. Compact each lift prior to placing successive lifts. Use power driven, vibrating-plate type tampers for large areas and rod-and-plate type hand tampers for small areas such as utility trenches and foundation and walk edges.

3.3.2.1 Slab on Grade

Provide a barrier of the depth indicated. Rake smooth and machine tamp, making at least three passes over the entire area. Hand tamp around pipe and conduit risers.

3.3.2.1.1 Utility Trenches

Place the required depth of material for bedding in the trenches prior to placing pipes and conduits and hand tamp the material. For pipes 3 inches and larger in diameter: After placing the pipe, bring material up to the top of the pipe and carefully hand tamp the material. Then, bring the material up to the top of the trench and tamp. For pipes smaller than 3 inches in diameter and for conduit: Bring material up to the top of the trench and tamp.

3.3.2.1.2 Edges

After concrete is placed and the form is removed, remove any dirt, loose concrete, and other debris and hand place and tamp additional material to the existing grade

3.3.2.2 CMU Block Walls

Place the material in non-grouted cells at a height of at least one course above grade of the wall.

3.3.2.3 Fence Posts and Utility Poles

Line the designated hole with a geotextile or similar material before proceeding with the work.

Once the geotextile is in place, put a 4 to 6 inches layer of the basaltic sand at the bottom of the hole. Hand tamp the material. After positioning the fence post or utility pole in the middle of the hole, fill around the sides, compacting the material after successive lifts of 6 to 12 inches until the hole is completely filled. Ensure that a 4 to 6 inches basaltic sand barrier exists around the perimeter of the post or pole.

3.3.2.4 Retaining Walls

Place the required amount of material below the footing and up to the grade level of the wall. Place lifts of 4 to 6 inches with compaction of each lift prior to placing successive lifts.

3.4 FIELD QUALITY CONTROL

3.4.1 Inspection

Provide Manufacturer's Guidance for performing a visual inspection of the

installed mesh to ensure the steel mesh provides the designed termite physical barrier.

3.4.2 Manufacturer Field Services

Before installing the steel mesh, verify that final grades are as indicated and smooth grading has been completed. Provide written verification that the site conditions under the proposed slabs are proper for the installation of the termite barrier system in accordance with the manufacturer's recommendations.

3.5 PROTECTION

Protect the installed steel mesh system, attachments, and accessories before, during, and after the work of all trades, as required by the system manufacturer or as directed by the Contracting Officer.

In the event that subsequent trades on the site move or damage the mesh, clamps, or parging mix, immediately contact the mesh installer for a recommendation of the necessary repairs.

-- End of Section --

SECTION 32 05 33

LANDSCAPE ESTABLISHMENT
08/17

PART 1 GENERAL

1.1 REFERENCES

The publications listed below form a part of this specification to the extent referenced. The publications are referred to within the text by the basic designation only.

ASTM INTERNATIONAL (ASTM)

ASTM D5851	(1995; R 2015) Planning and Implementing a Water Monitoring Program
ASTM D6155	(2019) Nontraditional Coarse Aggregate for Bituminous Paving Mixtures

TREE CARE INDUSTRY ASSOCIATION (TCIA)

TCIA Z133	(2017) American National Standard for Arboricultural Operations - Pruning, Repairing, Maintaining, and Removing Trees, and Cutting Brush - Safety Requirements

1.2 DEFINITIONS

1.2.1 Pesticide

Any substance or mixture of substances, including biological control agents, that may prevent, destroy, repel, or mitigate pests and are specifically labeled for use by the U.S. Environmental Protection Agency (EPA). Also, any substance used as a plant regulator, defoliant, disinfectant, or biocide. Examples of pesticides include fumigants, herbicides, insecticides, fungicides, nematicides, molluscicides and rodenticides.

1.2.2 Stand of Turf

100 percent ground cover of the established species.

1.2.3 Planter Beds

A planter bed is defined as an area containing one or a combination of the following plant types: shrubs, vines, wildflowers, annuals, perennials, ground cover, and a mulch topdressing excluding turf. Trees may also be found in planter beds.

1.3 RELATED REQUIREMENTS

Section 32 92 19 SEEDING, and Section 32 92 23 SODDING,[Section 32 92 26 SPRIGGING] applies to this section for installation of seed andsod requirements, with additions and modifications herein.

Section 32 93 00 EXTERIOR PLANTS applies to this section for installation of trees, shrubs, ground cover,and vines, with additions and modifications herein.

1.4 SUBMITTALS

Government approval is required for submittals with a "G" designation; submittals not having a "G" designation are for Contractor Quality Control approval.][for information only. When used, a designation following the "G" designation identifies the office that will review the submittal for the Government. Submittals with an "LA" are for government Landscape Architect approval. Submittals with an "S" are for inclusion in the Sustainability eNotebook, in conformance with Section 01 33 29 SUSTAINABILITY REPORTING. Submit the following in accordance with Section 01 33 00 SUBMITTAL PROCEDURES:

SD-01 Preconstruction Submittals

Integrated Pest Management Plan; G

SD-03 Product Data

Fertilizer; G

Mulches Topdressing

Organic Mulch Materials

SD-07 Certificates

Maintenance Inspection Report

[Plant Quantities; G

] SD-10 Operation and Maintenance Data

Maintenance

SD-11 Closeout Submittals

Tree Staking and Guying Removal

1.5 DELIVERY, STORAGE AND HANDLING

1.5.1 Delivery

Deliver fertilizer to the site in original containers bearing manufacturer's chemical analysis, name, trade name, or trademark, and indication of conformance to state and federal laws. Instead of containers, fertilizer, may be furnished in bulk with a certificate indicating the above information.

1.5.2 Storage

1.5.2.1 Fertilizer, Mulch Storage

Store material in designated areas. Store lime and fertilizer in cool, dry locations away from contaminants.

1.5.2.2 Antidesiccant's Storage

Do not store with fertilizers or other landscape maintenance materials.

1.5.3 Handling

Do not drop or dump materials from vehicles.

1.6 MAINTENANCE

Submit Operation and Maintenance (O&M) Manuals for planting materials. Include instructions indicating procedures during one typical year including variations of maintenance for climatic conditions throughout the year. Provide instructions and procedures for watering; promotion of growth, including fertilizing, pruning, and mowing; and integrated pest management. O&M Manuals must include pictures of planting materials cross referenced to botanical and common names, with a description of the normal appearance in each season.

Develop a water monitoring program for surface and ground water on the project site in accordance with ASTM D5851 and consistent with the water management program utilized during construction operations.

PART 2 PRODUCTS

2.1 POST-PLANT FERTILIZER

Fertilizer for groundcover, wildflowers, and grasses is not permitted. Provide fertilizer for trees, plants, and shrubs as recommended by plant supplier, except synthetic chemical fertilizers are not permitted. Fertilizers containing petrochemical additives or that have been treated with pesticides or herbicides are not permitted.

2.1.1 Granular Fertilizer

Organic, granular controlled release fertilizer containing the following minimum percentages, by weight, of plant food nutrients:

10 percent available nitrogen
10 percent available phosphorus
10 percent available potassium

2.2 WATER

Source of water must be approved by the Contracting Officer, and be of suitable quality for irrigation. Use collected storm water or graywater when available.

2.3 MULCHES TOPDRESSING

Free from noxious weeds, mold, pesticides, or other deleterious materials.

2.3.1 Inert Mulch Materials

Provide riverbank stone, complying with ASTM D6155, ranging in size from 4 to 6 inches.

2.3.2 Organic Mulch Materials

Provide un-dyed, double-shredded hardwood mulch.

2.4 PESTICIDES

Submit an Integrated Pest Management Plan, including weed and pest management strategies and proposed alternatives to herbicides and pesticides. Use biological pest controls as approved in the Plan.

PART 3 EXECUTION

3.1 EXTENT OF WORK

Provide landscape construction maintenance to include mowing,edging, overseeding,fertilizing,watering,weeding,pruning,andstake and guy adjusting, for all newly installed landscape areas , unless indicated otherwise, and at all areas inside or outside the limits of the construction that are disturbed by the Contractor's operations.

[3.1.1 Policing

Police all landscaped areas. Policing includes removal of leaves, branches and limbs regardless of length or diameter, dead vegetation, paper, trash, cigarette butts, garbage, rocks or other debris. [Policing must extend to both sides of fencing or walls.] Collected debris must be promptly removed and disposed of at an approved disposal site.

][3.1.2 Drainage System Maintenance

Remove all obstructions from surface and subsurface drain lines to allow water to flow unrestricted in swales,catch basins,and storm drain curb inlets.. Remove grates and clear debris in catch basins. Open drainage channels are to be maintained free of all debris and vegetation at all times. Edges of these channels must be clear of any encroachment by vegetation.

][]3.2 GROUNDCOVER ESTABLISHMENT PERIOD

Groundcover establishment period will commence on the date that inspection by the Contracting Officer shows that the newturf furnished under this contract has been satisfactorily installed to a 100 percent stand of coverage. The establishment period must continue for a period of 365 days.

3.2.1 Frequency of Maintenance

Begin maintenance immediately after turf has been installed. Inspect area once a week during the installation and establishment period and perform needed maintenance promptly.

3.2.2 Promotion of Growth

Maintain groundcover in a manner that promotes proper health, growth, natural color. Turf must have a neat uniform manicured appearance, free of bare areas, ruts, holes, weeds, pests, dead vegetation, debris, and unwanted vegetation that present an unsightly appearance. Mow, remove excess clippings, eradicate weeds, water, fertilize, [overseed,] [aerate,] [topdress] and perform other operations necessary to promote growth, as approved by Contracting Officer and consistent with approved Integrated Pest Management Plan. Remove noxious weeds common to the area from

planting areas by mechanical means.

3.2.3 Mowing

3.2.3.1 Turf

Mow turf at a uniform finished height. Mow turfed area[s] to a minimum average height of 3inches when average height of grass becomes 5 inches. The height of turf is measured from the soil. Perform mowing of turf in a manner that prevents scalping, rutting, bruising, uneven and rough cutting. Prior to mowing, all rubbish, debris, trash, leaves, rocks, paper, and limbs or branches on a turf area must be picked up and disposed. Adjacent paved areas must be swept/vacuumed clean.

3.2.4 Turf Edging and Trimming

Perimeter of planter bed edges, sidewalks, driveways, curbs, and other paved surfaces must be edged. Uniformly edge these areas to prevent encroachment of vegetation onto paved surfaces and to provide a clear cut division line between planter beds, turf, and ground cover. Edging is to be accomplished in a manner that prevents scalping, rutting, bruising, uneven and rough cutting. Perform edging on the same day that turf is mowed. Use of string line trimmers is permitted in "soft" areas such as an edge between turfgrass and a planter bed. Exercise care to avoid damage to any plant materials, structures, and other landscape features.

Trimming around trees, fences, poles, walls, and other similar objects is to be accomplished to match the height and appearance of surrounding mowed turf growth. Trimming must be performed on the same day the turf's mowed. Care must be exercised to avoid "Girdling" trees located in turf areas. The use of protective tree collars on trees in turf areas may be utilized as a temporary means to avoid injury to tree trunks. At the end of the plant establishment period Contractor will be responsible for removing all protective tree collars.

3.2.5 Post-Fertilizer Application

Apply turf fertilizer in a manner that promotes health, growth, vigor, color and appearance of cultivated turf areas. The method of application, fertilizer type and frequencies must be determined by the laboratory soil analysis results the requirements of the particular turf species.[Organic fertilizer must be used. In the event that organic fertilizer is not producing the desired effect, the Contractor must contract the Contracting Officer for approval prior to the use of a synthetic type of fertilizer.] Apply fertilizer by approved methods in accordance with the manufacturer's recommendations.

3.2.6 Turf Watering

Perform irrigation in a manner that promotes the health, growth, color and appearance of cultivated vegetation and that complies with all Federal, State, and local water agencies and authorities directives. The Contractor must be responsible to prevent over watering, water run-off, erosion, and ponding due to excessive quantities or rate of application. Abide by state, local or other water conservation regulations or restrictions in force during the establishment period.[Adjust irrigation controllers to comply with the water conservation regulations schedule].

[][3.2.7 Turf Clearance Area

Trees located in turf areas must be maintained with a growth free clearance of 18 inches from the tree trunk base. The use of mechanical weed whips to accomplish the turf growth free bed area is prohibited. Damaged trees must be replaced at the expense of the Contractor.

]3.2.8 Replanting

Replant in accordance with Section 32 92 23 SODDINGand within specified planting dates areas which do not have a satisfactory stand of turf.

3.2.9 Final Inspection and Acceptance

Final inspection will be make upon written request from the Contractor at least 10 days prior to the last day of the turf establishment period. Final turf acceptance will be based upon a satisfactory stand of turf.

3.2.10 Unsatisfactory Work

When work is found to not meet design intent and specifications, maintenance period will be extended at no additional cost to the Government until work has been completed, inspected and accepted by Contracting Officer.

3.3 EXTERIOR PLANT ESTABLISHMENT PERIOD

The exterior plant establishment period will commence on the date that inspection by the Contracting Officer shows that the new plants furnished under this contract have been satisfactorily installed and must continue for a period of 365days.

3.3.1 Frequency of Maintenance

Begin maintenance immediately after plants have been installed. Inspect exterior plants at least once a week during the installation and establishment period and perform needed maintenance promptly.

3.3.2 Promotion of Plant Growth and Vigor

Water, prune, fertilize, mulch, adjust stakes, guys and turnbuckles, eradicate weeds and perform other operations necessary to promote plant growth, and vigor.

3.3.3 Planter Bed Maintenance

Planter beds must be weeded, fertilized, irrigated, kept pest free, turf free, pruned, and mulch levels maintained. Planter beds will not be allowed to encroach into turf areas. A definite break must be maintained between turf areas and planter beds. Fertilize exterior planting materials to promote healthy plant growth without encouraging excessive top foliar growth. Remove noxious weeds common to the area from planting areas by mechanical means.

3.3.3.1 Shrub Selective Maintenance

In addition to the above requirements, shrubs must be selectively pruned, and shaped for health and safety when the following conditions exist: Remove growth in front of windows, over entrance ways or walks, and any growth which will obstruct vision at street intersections or of security

personnel; Remove dead, damaged or diseased branches or limbs; where shrub growth obstructs pedestrian walkways; where shrub growth is found growing against or over structures; where shrub growth permits concealment of unauthorized persons. Dispose of all pruning debris in a proper manner.

3.3.3.2 Tree Maintenance

Tree maintenance must include adjustment of stakes, ties, guy supports and turnbuckles, watering, fertilizing, pest control, mulching, pruning for health and safety and fall leaf cleanup. Fertilize exterior trees to promote healthy plant growth without encouraging excessive top foliar growth. Inspect and adjust stakes, ties, guy supports [and turnbuckles] to avoid girdling and promote natural development. All trees within the project boundaries, regardless of caliper, must be selectively pruned for safety and health reasons. These include but are not limited to removal of dead and broken branches and correction of structural defects. Prune trees according to their natural growth characteristics leaving trees well shaped and balanced. Pruning of all trees including palm trees must be accomplished by or in the presence of a certified member of the International Society of Arboriculture and in accordance with TCIA Z133. All pruning debris generated must be disposed of in a proper manner.

[3.3.4 Removal of Dying or Dead Plants

Remove dead and dying plants and provide new plants immediately upon commencement of the specified planting season, and replace [stakes,] [guys,] mulch and eroded earth mound water basins. Provide an additional 90 day establishment period for replacement plants beyond the original warranty period. A tree must be considered dying or dead when the main leader has died back, or a minimum of 20 percent of the crown has died. A shrub or ground cover must be considered dying or dead when a minimum of 20 percent of the plant has died. This condition must be determined by scraping on a branch an area 1/16 inch square, maximum, to determine the cause for dying plant material and must provide recommendations for replacement. The Contractor must determine the cause for dying plant material and provide recommendations for replacement.

3.3.5 Tracking of Unhealthy Plants

Note plants not in healthy growing condition, as determined by the Contracting Officer, and as soon as seasonal conditions permit, remove and replace with plants of the same species and sizes as originally specified. Install replacement plantings in accordance with Section 32 93 00 EXTERIOR PLANTS.

3.3.6 Final Inspection

Final inspection will be made upon written request from the Contractor at least 10 days prior to the last day of the establishment period. Final inspection will be based upon satisfactory health and growth of plants and on the following:

3.3.6.1 Total Plants on Site

Plants have been accepted and required number of replacements have been installed.

3.3.6.2 Mulching and Weeding

Planter beds and earth mound water basins are properly mulched and free of weeds.

[3.3.6.3 Tree Supports

Stakes, guys, and turnbuckles are in good condition.

]3.3.6.4 Remedial Work

Remedial measures directed by the Contracting Officer to ensure plant material survival and promote healthy growth have been completed.

3.3.7 Unsatisfactory Work

When work is found to not meet design intent and specifications, maintenance period will be extended at no additional cost to the Government until work has been completed, inspected and accepted by Contracting Officer.

3.4 FIELD QUALITY CONTROL

3.4.1 Maintenance Inspection Report

Provide maintenance inspection report to assure that landscape maintenance is being performed in accordance with the specifications and in the best interest of plant growth and survivability. Site observations must be documented at the start of the establishment period, then quarterly following the start, and at the end of establishment period. Submit results of site observation visits to the Contracting Officer within 7 calendar days of each site observation visit.

3.4.2 Tree Staking and Guying Removal

Provide a certified letter that all stakes and guys are removed from all project trees at the end of the establishment period.

-- End of Section --

SECTION 32 10 00

BITUMINOUS CONCRETE PAVEMENT
08/08

PART 1 GENERAL

1.1 REFERENCES

The publications listed below form a part of this specification to the extent referenced. The publications are referred to within the text by the basic designation only.

AMERICAN ASSOCIATION OF STATE HIGHWAY AND TRANSPORTATION OFFICIALS (AASHTO)

AASHTO T 230	(1968; R 2000) Determining Degree of Pavement Compaction of Bituminous Aggregate Mixtures
AASHTO T 30	(2015) Standard Method of Test for Mechanical Analysis of Extracted Aggregate

ASTM INTERNATIONAL (ASTM)

ASTM D2172/D2172M	(2011) Quantitative Extraction of Bitumen from Bituminous Paving Mixtures
ASTM D2950/D2950M	(2014) Density of Bituminous Concrete in Place by Nuclear Methods
ASTM D6155	(2015) Nontraditional Coarse Aggregate for Bituminous Paving Mixtures
ASTM D6927	(2015) Standard Test Method for Marshall Stability and Flow of Bituminous Mixtures

U.S. GREEN BUILDING COUNCIL (USGBC)

LEED NC	(2009) Leadership in Energy and Environmental Design(tm) New Construction Rating System

1.2 SUBMITTALS

Government approval is required for submittals with a "G" designation; submittals not having a "G" designation are for Contractor Quality Control approval. Submittals with an "S" are for inclusion in the Sustainability Notebook, in conformance to Section 01 33 29 SUSTAINABILITY REPORTING. Submit the following in accordance with Section 01 33 00 SUBMITTAL PROCEDURES:

SD-03 Product Data

Precast car stops; (LEED NC)
Aggregate; (LEED NC)

Submit documentation indicating percentage of post-industrial and post-consumer recycled content per unit of product. Indicate relative dollar value of recycled content products to total dollar value of products included in project.

Local/Regional Materials; (LEED NC)

Submit documentation indicating distance between manufacturing facility and the project site. Indicate distance of raw material origin from the project site. Indicate relative dollar value of local/regional materials to total dollar value of products included in project.

Albedo; (LEED NC)

Provide information identifying the reflectance of the pavement.

SD-04 Samples

Uncompacted mix

Pavement cores

SD-06 Test Reports

Trial batch reports

Mix design

Asphalt concrete

Density

Thickness

Straightedge test

Submit reports for testing specified under paragraph entitled "Field Quality Control."

SD-07 Certificates

Asphalt mix delivery record

Asphalt concrete and material sources

Obtain approval of the Contracting Officer for materials and material sources 2 days prior to the use of such material in the work.

Asphalt concrete

Curbs

Guard (Guide) rails

Median barriers

Traffic signs

Submit certificates, signed by the producer, that paving materials and incidental construction items conform to specification requirements.

1.3 QUALITY ASSURANCE

1.3.1 Regulatory Requirements

Provide work and materials in accordance with applicable requirements of SHS NCDOT RS. Divisions and Sections mentioned herein refer to those specifications. Paragraphs in SHS NCDOT RS entitled "Method of Measurement" and "Basis of Payment" shall not apply.

1.3.2 Modification of References

Where term "Engineer" is used in SHS NCDOT RS it shall be construed to mean Contracting Officer . .

1.3.3 Mix Delivery Record Data

Record and submit the following information to each load of mix delivered to the job site. Submit within one day after delivery on Government-furnished forms:

a. Truck No:

b. Time In:

c. Time Out:

d. Tonnage and Discharge Temperature:

e. Mix Type:

f. Location:

g. Stations Placed:

1.3.4 Trial Batch

Submit current bituminous design reports for all mix types proposed for use on the project.

1.3.5 Mix Design

Submit results of laboratory tests performed on each mix design. Testing shall have been accomplished not more than one year prior to date of material placement.

1.4 ENVIRONMENTAL REQUIREMENTS

Do not produce or place bituminous concrete when the weather is rainy or foggy, when the base course is frozen or has excess moisture, or when the ambient temperature is less than 40 degrees F in the shade away from artificial heat.

1.5 SUSTAINABLE DESIGN REQUIREMENTS

1.5.1 Local/Regional Materials

Use materials or products extracted, harvested, or recovered, as well as manufactured, within a 500 mileradius from the project site, if available from a minimum of three sources.PART 2 PRODUCTS

2.1 ASPHALT CONCRETE

Provide asphalt concrete in accordance with the applicable requirements of the SHS NCDOT RS, except where specified otherwise. Recycled asphalt pavement material may be used as permitted by SHS NCDOT RS.

2.1.1 Albedo

Installed system shall have a minimum solar reflectance of 0.3.

2.2 SUBBASE

SHS NCDOT RS, materials for construction of the subbase shall be in accordance with Division 10, Section 1005 and 1008 .

2.3 BASE COURSE

SHS NCDOT RS, materials for construction of the base course shall be in accordance with Division 10, Section 1005, 1008, and 1010 , .

2.4 SURFACE COURSE

SHS NCDOT RS, materials for construction of the surface course shall be in accordance with Division 10, Section 1020 .

2.5 STRIPING

SHS NCDOT RS, materials for paint striping shall be in accordance with Division 10, Section 1080 , .

2.6 CURBS AND GUTTERS

SHS NCDOT RS, materials for construction of curbs and gutters shall be in accordance with Division 10 .

Concrete is specified in Section 03 30 00 CAST-IN-PLACE CONCRETE.

2.7 GUARD (GUIDE) RAILS

SHS NCDOT RS, materials for construction of the guard (guide) rails shall be in accordance with Division 10, Section 1046 .

2.8 MEDIAN BARRIERS

SHS NCDOT RS, materials for construction of the median barriers shall be in accordance with Division 10 .

2.9 TRAFFIC SIGNS

SHS NCDOT RS, provide traffic signs in accordance with Division 10, Section 1092 and 1094 .

2.10 PRECAST CAR STOPS

Provide car stops to the profile and size indicated. .

2.11 COMPOSITION OF MIXTURE REQUIREMENTS

2.11.1 Mixture Properties

Gradation of mineral aggregate shall be as specified. Percentage of bituminous material provided in the bituminous mixtures shall be within the limits specified. Mixtures shall have the following physical properties:

Test Property	Values
Stability (50 Blows)	Not less than 1000 pounds
Flow (0.01 inch)	Not more than 20 nor less than 8
Percent Air Voids	Not less than 3 nor more than 8 for binder course; not less than 3 nor more than 5 for wearing course
Percent Voids in Mineral Aggregates	See Table I

TABLE I		
MINIMUM PERCENT VOIDS IN MINERAL AGGREGATE (VMA)		
U.S.A. Standard Sieve Designation	Nominal Maximum Particle Size, Inch	Minimum VMA Percent
No. 4	0.187	18
3/8 inch	0.375	16
1/2 inch	0.500	15
3/4 inch	0.750	14
1 inch	1.000	13

2.11.2 Aggregate

2.11.2.1 Course Aggregate

Coarse aggregate shall contain a minimum of 25 percent recycled porcelain, concrete, stone, or other recycled material complying with ASTM D6155.PART 3 EXECUTION

3.1 PREPARATION

3.1.1 Excavation and Filling

Excavation and filling to establish elevation of subgrade is specified in Section 31 23 00.00 20 EXCAVATION AND FILL.

3.2 CONSTRUCTION

Provide construction in accordance with the applicable requirements of the SHS NCDOT RS, except where indicated or specified otherwise.

3.2.1 Subgrade

SHS NCDOT RS, preparation of subgrade shall be in accordance with , Section 31 23 00.00 20 EXCAVATION AND FILL. Verify compacted subgrade, granular base, or stabilized soil is acceptable and ready to support paving and imposed loads.

3.2.2 Subbase

SHS NCDOT RS, methods of construction of the subbase shall be in accordance with Division 5, Section 520 .

3.2.3 Base Course

SHS NCDOT RS, methods of construction of the base course shall be in accordance with Division 5, Section 520 .

3.2.4 Surface Course

SHS NCDOT RS, methods of construction of the surface course shall be in accordance with Division 6, Section 610 . Placement will not be permitted unless the Contractor has a working asphalt thermometer on site. Install surface elevation of the pervious paving system 1/8 to 1/4 inch above adjacent drainage inlets, concrete collars, or channels.

3.2.5 Striping

SHS NCDOT RS, provide paint striping in accordance with Division 12, Section 1205. Allow bituminous pavement to cure for at least 21 days before paint is applied. Pavement shall be thoroughly clean and entirely free of loose sand, stones, dust, oil, grease, water, and other substances that will be deleterious to the paint or will adversely affect the adhesion of the paint. Do not apply paint during high wind (over 15 miles per hour) or high humidity (over 70 percent). Apply paint only when ambient temperature is 40 degrees F or above and rising but not more than 95 degrees F. Dimensions and arrangement of striping shall be as indicated. Apply paint to a wet film thickness of 0.015 inch by means of conventional traffic line striping equipment. Traffic shall not be permitted to use the painted areas for a minimum of 30 minutes after painting of lines has been completed.

3.2.6 Curbs and Gutters

SHS NCDOT RS, methods of construction of curbs and gutters shall be in accordance with Division 8, Section 846.

Provide curbs and gutters as indicated. Provide concrete construction as specified in Section 03 30 00 CAST-IN-PLACE CONCRETE.

3.2.7 Guard (Guide) Rails

SHS NCDOT RS, methods of construction of the guard (guide) rails shall be in accordance with Division 8, Section 862.

3.2.8 Median Barrier

SHS NCDOT RS, methods of construction of the median barriers shall be in accordance with Division 8, Section 852 .

3.2.9 Traffic Signs

SHS NCDOT RS, install traffic signs in accordance with Division 9 .

3.2.10 Precast Car Stops

Provide car stops where indicated. Install with an anchor rod driven through each sleeve.

3.3 FIELD QUALITY CONTROL

Sample shall be taken by Contractor as specified herein. Contractor shall replace pavement where sample cores have been removed. Submit 2 pavement cores when using the in-place nuclear density method.

3.3.1 Sample and Core Identification

Place each sample and core in a container and securely seal to prevent loss of material. Tag each sample for identification. Tag shall contain the following information:

a. Contract No.

b. Sample No.

c. Quantity

d. Date of Sample

e. Sample Description

f. Source/Location/Stations Placed/depth below the finish grade

g. Intended Use

h. Thicknesses of various lifts placed

3.3.2 Testing

3.3.2.1 Bituminous Mix Testing

Take two samples per day per mix type at plant or from truck. Test uncompacted mix for extraction in accordance with ASTM D2172/D2172M and sieve analysis in accordance with AASHTO T 30. Test samples for stability and flow in accordance with ASTM D6927. When two consecutive tests fail to meet requirements of specifications, cease placement operations and test a new trial batch prior to resumption of placement operations. Submit 2 per day of each mix type. When two tests on uncompacted mix fail submit new trial batch for approval.

3.3.2.2 Testing of Pavement Course

a. Density: Determine density of pavement by testing cores obtained from the binder and wearing course in accordance with AASHTO T 230. Take three cores at location designated by Contracting Officer for each 200 tons, or fraction thereof, of asphalt placed. Deliver cores undisturbed and undamaged to laboratory and provide test results within 48 hours of each day placement of paving materials.

b. Thickness: Determine thickness of the binder and wearing course from cores taken for density test.

c. Straightedge Test: Test compacted surface of binder course and wearing course with a straightedge as work progresses. Apply straightedge parallel with and at right angles to center line after final rolling. Variations in the binder course surface shall not be more than 1/4 inches from the lower edge of the 10 foot straightedge; variations in wearing course surface shall not be more than 1/4 from the lower edge of the 10 foot straightedge. Pavement showing irregularities greater than that specified shall be corrected as directed by Contracting Officer.

3.3.2.3 Alternate Testing Method for Pavement Courses

At Contractor's option the following in-place testing method may be used to determine density and thickness in lieu of testing specified above. Frequency of testing shall be the same. When in-place nuclear method to determine density is used, take two pavement cores at locations designated by Contracting Officer and turn over to Government to verify pavement thickness.

a. Density: Determine density of pavement by in-place testing using Nuclear Method in accordance with ASTM D2950/D2950M.

b. Thickness: Determine thickness of finished pavement by use of following equation:

$$t = \frac{W}{0.75d}$$

Where t= pavement thickness, in inches.
W= average weight per square yard of mixture actually used in work.
d= compacted density as measured by nuclear density device.

3.4 WASTE MANAGEMENT

Protect excess material from contamination and return to manufacturer, or reuse on-site for walkways, patching, ditch beds, speed bumps, or curbs.

-- End of Section --

SECTION 32 13 13.06

PORTLAND CEMENT CONCRETE PAVEMENT FOR ROADS AND SITE FACILITIES
11/11

PART 1 GENERAL

1.1 REFERENCES

The publications listed below form a part of this specification to the extent referenced. The publications are referred to within the text by the basic designation only.

AMERICAN CONCRETE INSTITUTE (ACI)

ACI 211.1	(1991; R 2009) Standard Practice for Selecting Proportions for Normal, Heavyweight and Mass Concrete
ACI 301	(2016) Specifications for Structural Concrete
ACI 305.1	(2014) Specification for Hot Weather Concreting
ACI 306.1	(1990; R 2002) Standard Specification for Cold Weather Concreting
ACI 325.12R	(2002; R 2013) Guide for Design of Jointed Concrete Pavements for Streets and Local Roads
ACI 330R	(2008) Guide for the Design and Construction of Concrete Parking Lots

AMERICAN WATER WORKS ASSOCIATION (AWWA)

AWWA C215	(2016) Extruded Polyolefin Coatings for Steel Water Pipe

ASTM INTERNATIONAL (ASTM)

ASTM A184/A184M	(2019) Standard Specification for Welded Deformed Steel Bar Mats for Concrete Reinforcement
ASTM A615/A615M	(2016) Standard Specification for Deformed and Plain Carbon-Steel Bars for Concrete Reinforcement
ASTM A775/A775M	(2017) Standard Specification for Epoxy-Coated Steel Reinforcing Bars
ASTM A966/A966M	(2015) Standard Test Method for Magnetic Particle Examination of Steel Forgings Using Alternating Current
ASTM C31/C31M	(2019) Standard Practice for Making and

	Curing Concrete Test Specimens in the Field
ASTM C33/C33M	(2018) Standard Specification for Concrete Aggregates
ASTM C78/C78M	(2018) Standard Test Method for Flexural Strength of Concrete (Using Simple Beam with Third-Point Loading)
ASTM C94/C94M	(2018) Standard Specification for Ready-Mixed Concrete
ASTM C143/C143M	(2015) Standard Test Method for Slump of Hydraulic-Cement Concrete
ASTM C150/C150M	(2018) Standard Specification for Portland Cement
ASTM C171	(2016) Standard Specification for Sheet Materials for Curing Concrete
ASTM C172/C172M	(2017) Standard Practice for Sampling Freshly Mixed Concrete
ASTM C231/C231M	(2017a) Standard Test Method for Air Content of Freshly Mixed Concrete by the Pressure Method
ASTM C260/C260M	(2010a; R 2016) Standard Specification for Air-Entraining Admixtures for Concrete
ASTM C309	(2011) Standard Specification for Liquid Membrane-Forming Compounds for Curing Concrete
ASTM C494/C494M	(2017) Standard Specification for Chemical Admixtures for Concrete
ASTM C595/C595M	(2018) Standard Specification for Blended Hydraulic Cements
ASTM C618	(2019) Standard Specification for Coal Fly Ash and Raw or Calcined Natural Pozzolan for Use in Concrete
ASTM C989/C989M	(2018a) Standard Specification for Slag Cement for Use in Concrete and Mortars
ASTM C1077	(2017) Standard Practice for Agencies Testing Concrete and Concrete Aggregates for Use in Construction and Criteria for Testing Agency Evaluation
ASTM C1157/C1157M	(2017) Standard Performance Specification for Hydraulic Cement
ASTM C1260	(2014) Standard Test Method for Potential Alkali Reactivity of Aggregates (Mortar-Bar Method)

ASTM C1549	(2016) Standard Test Method for Determination of Solar Reflectance Near Ambient Temperature Using a Portable Solar Reflectometer
ASTM C1567	(2013) Standard Test Method for Potential Alkali-Silica Reactivity of Combinations of Cementitious Materials and Aggregate (Accelerated Mortar-Bar Method)
ASTM C1602/C1602M	(2018) Standard Specification for Mixing Water Used in Production of Hydraulic Cement Concrete
ASTM D6155	(2019) Nontraditional Coarse Aggregate for Bituminous Paving Mixtures

U.S. DEPARTMENT OF DEFENSE (DOD)

UFC 3-250-01	(2016) Pavement Design for Roads and Parking Areas

1.2 DESIGN

This materials and construction specification is intended to be used on projects where the design was completed using UFC 3-250-01 Pavement Design for Roads, Streets, Walks, and Open Storage Areas, ACI 330R, Guide for the Design and Construction of Concrete Parking Lots or ACI 325.12R, Guide for Design of Jointed Concrete Pavements for Streets and Local Roads, or equivalent.

1.3 RELATED SECTIONS

Portland cement concrete pavement must use Section 32 11 20 [BASE COURSE FOR RIGID][AND][SUBBASES FOR FLEXIBLE] PAVING PAVING, in addition to this section.

1.4 SUBMITTALS

Government approval is required for submittals with a "G" designation; submittals not having a "G" designation are [for Contractor Quality Control approval.][for information only. When used, a designation following the "G" designation identifies the office that will review the submittal for the Government.] Submittals with an "S" are for inclusion in the Sustainability eNotebook, in conformance with Section 01 33 29 SUSTAINABILITY REPORTING. Submit the following in accordance with Section 01 33 00 SUBMITTAL PROCEDURES:

SD-03 Product Data

Curing Materials; G

Admixtures; G

Dowel; G

[Reinforcement; G

] Submit a complete list of materials including type, brand and applicable reference specifications.

Cementitious Materials; G

Aggregate; G

[Albedo

Provide information identifying the reflectance of the pavement.

] SD-04 Samples

[Field-Constructed Mockup

] SD-05 Design Data

Concrete Mix Design; G

Thirty days minimum prior to concrete placement, submit a mix design, with applicable tests, for each strength and type of concrete for approval. Submit a complete list of materials including type; brand; source and amount of cement, fly ash, slag, and admixtures; and applicable reference specifications. Provide mix proportion data using at least three different water-cement ratios for each type of mixture, which will produce a range of strength encompassing those required for each class and type of concrete required. Submittal must clearly indicate where each mix design will be used when more than one mix design is submitted. Obtain acknowledgement of approvals prior to concrete placement. Submit a new mix design for each material source change.

SD-06 Test Reports

Aggregate Tests; G

Concrete Slump Tests; G

Air Content Tests; G

Flexural Strength Tests; G

[Cementitious Materials; G

] SD-07 Certificates

Ready-mixed Concrete Plant; G

Batch Tickets; G

Cementitious Materials; G

1.5 DELIVERY, STORAGE, AND HANDLING

ASTM C94/C94M.

1.6 QUALITY ASSURANCE

1.6.1 Ready-mixed Concrete Plant Certification

Unless otherwise approved by the Contracting Officer, ready mixed concrete must be produced and provided by a National Ready-Mix Concrete Association (NRMCA) certified plant. If a volumetric mobile mixer is used to produce the concrete, rather than ready-mixed concrete, the mixer(s) must conform to the standards of the Volumetric Mixer Manufacturers Bureau (VMMB). Verification must be made by a current VMMB conformance plate affixed to the volumetric mixer equipment.

1.6.2 Contractor Qualifications

Unless waived by the Contracting Officer, the Contractor must meet one of the following criteria:

a. Contractor must have at least one National Ready Mixed Concrete Association (NRMCA) certified concrete craftsman and at least one American Concrete Institute (ACI) Flatwork Finisher Certified craftsman on site, overseeing each placement crew during all concrete placement.

b. Contractor must have no less than three NRMCA certified concrete installers and at least two American Concrete Institute (ACI) Flatwork Finisher Certified installers, who must be on site working as members of each placement crew during all concrete placement.

1.6.3 Required Information

Submit copies of laboratory test reports showing that the mix has been successfully tested to produce concrete with the properties specified and that mix will be suitable for the job conditions. The laboratory test reports must include mill test and all other test for cementitious materials, aggregates, and admixtures. Provide maximum nominal aggregate size, combined aggregate gradation analysis, percentage retained and passing sieve, and a graph of percentage retained verses sieve size. Submit test reports along with the concrete mix design. Sampling and testing of materials, concrete mix design, sampling and testing in the field must be performed by a commercial testing laboratory which conforms to ASTM C1077. The laboratory must be approved in writing by the Contracting Officer.

1.6.4 Batch Tickets

ASTM C94/C94M. Submit mandatory batch ticket information for each load of ready-mixed concrete.

[1.6.5 Field-Constructed Mockup

Install a minimum [400 square feet] to demonstrate typical joints, surface finish, texture, color, thickness, and standard of workmanship. Test panels must be placed using the mixture proportions, materials, and equipment as proposed for the project. Test mock up panels in accordance with requirements in FIELD QUALITY CONTROL.

When a test panel does not meet one or more of the requirements, the test panel must be rejected, removed, and replaced at the Contractor's expense. If the test panels are acceptable, they may be incorporated into the project with the approval of the Contracting Officer.

]PART 2 PRODUCTS

2.1 MATERIALS

2.1.1 Cementitious Materials

Cementitious materials in concrete mix must be 20 to 50 percent non-portland cement pozzolanic materials [or slag]by weight.[Provide test data demonstrating compatibility and performance of concrete satisfactory to Contracting Officer.]

2.1.1.1 Cement

ASTM C150/C150M, Type I or II [III, for high early concrete] [or V] [low alkali]or ASTM C595/C595M, Type IS, IP, or P [MS] [MH] [mortar expansion] or ASTM C1157/C1157M [MS] [HS] [R].

2.1.1.2 Fly Ash and Pozzolan

ASTM C618, Type F, or N. Fly ash certificates must include test results in accordance with ASTM C618.

2.1.1.3 Ultra Fine Fly Ash and Ultra Fine Pozzolan

Ultra Fine Fly Ash (UFFA) and Ultra Fine Pozzolan (UFP) must conform to ASTM C618, Class F or N, and the following additional requirements:

a. The strength activity index at 28 days of age must be at least 95 percent of the control specimens.

b. The average particle size must not exceed 6 microns.

2.1.1.4 Slag

ASTM C989/C989M, Slag Cement (formerly Ground Granulated Blast Furnace Slag) Grade 100 or 120. Certificates must include test results in accordance with ASTM C989/C989M.

2.1.1.5 Supplementary Cementitious Materials (SCM) Content

The concrete mix must always contain one of the SCMs listed in Table 1 within the range specified therein, whether or not the aggregates are found to be reactive in accordance with the paragraph ALKALI REACTIVITY TEST".

TABLE 1
SUPPLEMENTARY CEMENTITIOUS MATERIALS CONTENT

Supplementary Cementitious Material	Minimum Content (percent)	Maximum Content (percent)
Class N Pozzolan and Class F Fly Ash		
$SiO_2 + Al_2O_3 + Fe_2O_3 > 70$ percent	25	35
$SiO_2 + A1_2O_3 + Fe_2O_3 > 80$ percent	20	35

TABLE 1 SUPPLEMENTARY CEMENTITIOUS MATERIALS CONTENT		
Supplementary Cementitious Material	Minimum Content (percent)	Maximum Content (percent)
SiO2 + A12O3 + Fe2O3 > 90 percent	15	35
UFFA and UFP	7	16
GGBF Slag	40	50

2.1.2 Water

Water must conform to ASTM C1602/C1602M. Hot water must not be used unless approved by the Contracting Officer.

2.1.3 Aggregate

Coarse aggregate must consist of crushed or uncrushed gravel, crushed stone, or a combination thereof.[Provide coarse aggregate with a minimum of [25][_____] percent recycled porcelain, concrete, stone, or other recycled material complying with ASTM D6155.] Aggregates, as delivered to the mixers, must consist of clean, hard, uncoated particles. Coarse aggregate must be washed. Washing must be sufficient to remove dust and other coatings. Fine aggregate must consist of natural sand, manufactured sand, or a combination of the two, and must be composed of clean, hard, durable particles. Both coarse and fine aggregates must meet the requirements of ASTM C33/C33M.

2.1.3.1 Alkali Reactivity Test

Aggregates to be used in all concrete in projects over 50,000 SF in size must be evaluated and tested for alkali-aggregate reactivity in accordance with ASTM C1260. The types of aggregates must be evaluated in a combination which matches the proposed mix design (including Class F fly ash or GGBF slag), utilizing ASTM C1567. Test results of the combination must have a measured expansion of less than 0.08 percent at 28 days. Should the test data indicate an expansion of greater than 0.08%, the aggregate(s) must be rejected and new aggregate sources must be submitted for retesting or may submit additional test results incorporating Lithium Nitrate for consideration.

ASTM C1567 must be performed as follows to include one of the following options:

a. Utilize the low alkali Portland cement and Class F fly ash in combination for the test proportioning. The laboratory must use the Contractor's proposed percentage of cement and fly ash.

b. Utilize the low alkali Portland cement and ground granulated blast furnace (GGBF) slag in combination for the test proportioning. The laboratory must use the Contractor's proposed percentage of cement and GGBF.

c. Utilize the low alkali Portland cement and Class F fly ash and ground granulated blast furnace (GGBF) slag in combination for the test proportioning. The laboratory must use the Contractor's proposed

percentage of cement, fly ash and GGBF.

2.1.3.2 Fine Aggregates

ASTM C33/C33M.

2.1.3.3 Coarse Aggregates

ASTM C33/C33M.

2.1.4 Admixtures

ASTM C494/C494M: Type A, water reducing; Type B, retarding; Type C, accelerating; Type D, water-reducing and retarding; and Type E, water-reducing and accelerating admixture. Do not use calcium chloride admixtures. Where not shown or specified, the use of admixtures is subject to written approval of the Contracting Officer.

ASTM C260/C260M: Air-entraining.

2.1.5 Reinforcement

2.1.5.1 Dowel Bars

Bars must conform to ASTM A615/A615M, [Grade 40] [Grade 60] for plain billet-steel bars of the size and length indicated. Remove all burrs and projections from the bars.

2.1.5.2 Coated Dowel Bars

Bars must conform to ASTM A615/A615M, [Grade 40] [Grade 60] for plain billet-steel bars of the size and length indicated. Remove all burrs or projections from the dowel bars. Coating system must conform to AWWA C215, Type 2. Coat the bars with a double coat system or an epoxy coating system for resistance to penetration of oil and salt solutions. The systems must be in accordance with manufacturer's recommendation for coatings which are not bondable to concrete. Bond the coating to the dowel bar to resist laps or folds during movement of the joint. Coating thickness must be 7 mils minimum and 20 mils maximum.

2.1.5.3 Tie Bars

Bars must be billet or axle steel deformed bars and conform to ASTM A615/A615M or ASTM A966/A966M [Grade 40] [Grade 60].[Epoxy coated in accordance with ASTM A775/A775M.]

[2.1.5.4 Reinforcement

Deformed steel bar mats must conform to ASTM A184/A184M. Bar reinforcement must conform to [ASTM A615/A615M] [ASTM A966/A966M], [Grade 40] [Grade 60].

]2.1.6 Curing Materials

2.1.6.1 White-Burlap-Polyethylene Sheet

ASTM C171, 0.004 inch thick white opaque polyethylene bonded to 10 oz/linear yard (40 inch) wide burlap.

2.1.6.2 Liquid Membrane-Forming Compound

ASTM C309, white pigmented, Type 2, Class B, free of paraffin or petroleum.

[2.1.6.3 Liquid Chemical Sealer-Hardener Compound

Compound must be magnesium fluosilicate which when mixed with water seals and hardens the surface of the concrete. Do not use on exterior slabs exposed to freezing conditions. Compound must not reduce the adhesion of resilient flooring, tile, paint, roofing, waterproofing, or other material applied to concrete.

]2.1.7 Joint Fillers and Sealants

Provide as specified in Section [32 01 19 FIELD MOLDED SEALANTS FOR SEALING JOINTS IN RIGID PAVEMENTS][32 13 73.19 COMPRESSION CONCRETE PAVING JOINT SEALANT].[New joints must match existing alignment.]

[2.1.8 Biodegradable Form Release Agent

Provide form release agent that is colorless and biodegradable. A minimum of 87 percent of the total product must be biobased material. Provide product that does not bond with, stain, or adversely affect concrete surfaces and does not impair subsequent treatments of concrete surfaces. Provide form release agent that does not contain diesel fuel, petroleum-based lubricating oils, waxes, or kerosene.

]2.2 CONCRETE PAVEMENT

2.2.1 Joint Layout Drawings

If jointing requirements on the project drawings are not compatible with the proposed placement sequence, submit a joint layout plan shop drawing to the Contracting Officer for approval. No work must be allowed to start until the joint layout plan is approved. The joint layout plan must indicate and describe in the detail the proposed jointing plan for contraction joints, expansion joints, and construction joints, in accordance with the following:

a. Indicate locations of contraction joints, construction joints, and expansion joints. Spacing between contraction joints must not exceed 15 feet unless noted otherwise or approved by the Contracting Officer.

b. The larger dimension of a panel must not be greater than 125% of the smaller dimension.

c. The minimum angle between two intersecting joints must be 80 degrees, unless noted otherwise or approved by the Contracting Officer.

d. Joints must intersect pavement-free edges at a 90 degree angle the pavement edge and must extend straight for a minimum of 1.5 feet from the pavement edge, where possible.

e. Align joints of adjacent panels.

f. Align joints in attached curbs with joints in pavement when possible.

g. Ensure joint depth, widths, and dimensions are specified.

h. Minimum contraction joint depth must be 1/4 of the pavement thickness. The minimum joint width must be 1/8 inch.

i. Use expansion joints only where pavement abuts buildings, foundations, manholes, and other fixed objects.

[2.2.2 Albedo

Provide a system with a minimum initial Solar Reflectance of at least 0.33 and a 3-year aged of 0.28 as tested in accordance with ASTM C1549.

]2.3 CONTRACTOR-FURNISHED MIX DESIGN

Contractor-furnished concrete mix must be designed in accordance with ACI 211.1 except as modified herein, and the mix design must be as specified herein under paragraph SUBMITTALS. The concrete must have a minimum flexural strength of [650][_____] pounds per square inch at 28 days. The concrete may be air entrained. If air entrainment is used the air content must be [5.0][6.0]. Maximum size aggregate for slip forming must be 1.5 inches. The slump must be one to 3 inches (or less when slip form is used). For slipformed pavement, at the start of the project, select a maximum allowable slump which will produce in-place pavement meeting the specified tolerances for control of edge slump. The selected slump must be applicable to both pilot and fill-in lanes.

If the cementitious material is not sufficient to produce concrete of the flexural strength required it must be increased as necessary, without additional compensation under the Contract. The cementitious factor must be calculated using cement, Class F fly ash, and or GGBF slag. The mix must use a SCM material by weight in accordance with Table 1 in "Supplementary Cementitious Materials (SCM) Content"

PART 3 EXECUTION

3.1 FORMS

3.1.1 Construction

Construct forms to be removable without damaging the concrete.

3.1.2 Coating

Before placing the concrete, coat the contact surfaces of forms [except existing pavement sections where bonding is required,] with a non-staining mineral oil, non-staining form coating compound, biodegradable form release agent, or two coats of nitro-cellulose lacquer.[When using existing pavement as a form, clean existing concrete and then coat with asphalt emulsion bondbreaker before concrete is placed.]

3.1.3 Grade and Alignment

Check and correct grade elevations and alignment of the forms immediately before placing the concrete.

3.2 REINFORCEMENT

3.2.1 Dowel Bars

Install bars accurately aligned, vertically and horizontally, at indicated

locations and to the dimensions and tolerances indicated. Before installation thoroughly grease the sliding portion of each dowel. Dowels must remain in position during concrete placement and curing.

3.2.2 Coated Dowel Bars

Install bars, accurately aligned vertically and horizontally, at indicated locations and to the dimensions and tolerances indicated. Reject coatings which are perforated, cracked or otherwise damaged. While handling avoid scuffing or gouging of the coatings.

3.2.3 Tie Bars

Install bars, accurately aligned horizontally and vertically, at indicated locations.[For slipform construction, insert bent tie bars by hand or other approved means.]

3.2.4 Setting Slab Reinforcement

Reinforcement must be positioned on suitable chairs prior to concrete placement. At expansion, contraction and construction joints, place the reinforcement as indicated. Reinforcement, when placed in concrete, must be free of mud, oil, scale or other foreign materials. Place reinforcement accurately and wire securely. The laps at splices must be 12 inches minimum and the distances from ends and sides of slabs and joints must be as indicated.

3.3 MEASURING, MIXING, CONVEYING, AND PLACING CONCRETE

3.3.1 Measuring

ASTM C94/C94M.

3.3.2 Mixing

ASTM C94/C94M, except as modified herein. Begin mixing within 30 minutes after cement has been added to aggregates. When the air temperature is greater than 85 degrees F, place concrete within 60 minutes. With the approval of the Contracting Officer, a hydration stabilizer admixture meeting the requirements of ASTM C494/C494M Type D, may be used to extend the placement time to 90 minutes. Additional water may be added to bring slump within required limits as specified in Section 11.7 of ASTM C94/C94M, provided that the specified water-cement ratio is not exceeded.

3.3.3 Conveying

ASTM C94/C94M.

3.3.4 Placing

Follow guidance of ACI 301, except as modified herein. Do not exceed a free vertical drop of 5 feet from the point of discharge. Deposit concrete either directly from the transporting equipment or by conveyor on to the pre-wetted subgrade or subbase, unless otherwise specified. Do not place concrete on frozen subgrade or subbase. Deposit the concrete between the forms to an approximately uniform height. Place concrete continuously at a uniform rate, with minimum amount of segregation, without damage to the grade and without unscheduled stops except for equipment failure or other emergencies. If this occurs within 10 feet of a previously placed

expansion joint, remove concrete back to joint, repair any damage to grade, install a construction joint and continue placing concrete only after cause of the stop has been corrected.

3.3.5 Vibration

Immediately after spreading concrete, consolidate concrete with internal type vibrating equipment along the boundaries of all slabs regardless of slab thickness, and interior of all concrete slabs 6 inches or more in thickness. Limit duration of vibration to that necessary to produce consolidation of concrete. Excessive vibration will not be permitted. Vibrators must not be operated in concrete at one location for more than 15 seconds. Vibrating equipment of a type approved by the Contracting Officer may be used to consolidate concrete in unreinforced pavement slabs less than 6 inches thick.

3.3.5.1 Vibrating Equipment

Operate equipment, except hand-manipulated equipment, ahead of the finishing machine. Select the number of vibrating units and power of each unit to properly consolidate the concrete. Mount units on a frame that is capable of vertical movement and, when necessary, radial movement, so vibrators may be operated at any desired depth within the slab or be completely withdrawn from the concrete. Clear distance between frame-mounted vibrating units that have spuds that extend into the slab at intervals across the paving lane must not exceed 30 inches. Distance between end of vibrating tube and side form must not exceed 2 inches. For pavements less than 10 inches thick, operate vibrators at mid-depth parallel with or at a slight angle to the subbase. For thicker pavements, angle vibrators toward the vertical, with vibrator tip preferably about 2 inches from subbase, and top of vibrator a few inches below pavement surface. Vibrators may be pneumatic, gas driven, or electric, and must be operated at frequencies within the concrete of not less than 8,000 vibrations per minute. Amplitude of vibration must be such that noticeable vibrations occur at 1.5 foot radius when the vibrator is inserted in the concrete to the depth specified.

3.3.6 Cold Weather

Except with authorization, do not place concrete when ambient temperature is below 40 degrees F or when concrete is likely to be subjected to freezing temperatures within 24 hours. When authorized, when concrete is likely to be subjected to freezing within 24 hours after placing, heat concrete materials so that temperature of concrete when deposited is between 65 and 80 degrees F. Methods of heating materials are subject to approval of the Contracting Officer. Do not heat mixing water above 165 degrees F. Remove lumps of frozen material and ice from aggregates before placing aggregates in mixer. Follow practices found in ACI 306.1.

3.3.7 Hot Weather

Maintain required concrete temperature in accordance with Figure NRMCA NOMOGRAPH FOR ESTIMATING EVAPORATION RATE ON THE BASIS OF MENZEL FORMULA in ACI 305.1 to prevent evaporation rate from exceeding 0.2 pound of water per square foot of exposed concrete per hour. Cool ingredients before mixing or use other suitable means to control concrete temperature and prevent rapid drying of newly placed concrete. After placement, use fog spray, apply monomolecular film, or use other suitable means to reduce the evaporation rate. Start curing when surface of fresh concrete is

sufficiently hard to permit curing without damage. Cool underlying material by sprinkling lightly with water before placing concrete. Follow practices found in ACI 305.1.

3.4 PAVING

Pavement must be constructed with paving and finishing equipment utilizing [fixed forms] [slipforms].

3.4.1 Consolidation

The paver vibrators must be inserted into the concrete not closer to the underlying material than 2 inches. The vibrators or tamping units in front of the paver must be automatically controlled so that they stop immediately as forward motion ceases. Excessive vibration must not be permitted. Concrete in small, odd-shaped slabs or in locations inaccessible to the paver mounted vibration equipment must be vibrated with a hand-operated immersion vibrator. Vibrators must not be used to transport or spread the concrete.

3.4.2 Operation

When the paver is operated between or adjacent to previously constructed pavement (fill-in lanes), provisions must be made to prevent damage to the previously constructed pavement, including keeping the existing pavement surface free of debris, and placing rubber mats beneath the paver tracks. Transversely oscillating screeds and extrusion plates must overlap the existing pavement the minimum possible, but in no case more than 8 inches.

3.4.3 Required Results

The paver-finisher must be operated to produce a thoroughly consolidated slab throughout, true to line and grade within specified tolerances. The paver-finishing operation must produce a surface finish free of irregularities, tears, voids of any kind, and other discontinuities. It must produce only a minimum of paste at the surface. Multiple passes of the paver-finisher must not be permitted. The equipment and its operation must produce a finished surface requiring no hand finishing, other than the use of cutting straightedges, except in very infrequent instances. No water, other than true fog sprays (mist), must be applied to the concrete surface during paving and finishing.

3.4.4 Fixed Form Paving

Forms must be steel, except that wood forms may be used for curves having a radius of 150 feet or less, and for fillets. Forms may be built up with metal or wood, added only to the base, to provide an increase in depth of not more than 25 percent. The base width of the form must be not less than eight-tenths of the vertical height of the form, except that forms 8 inches or less in vertical height must have a base width not less than the vertical height of the form. Wood forms for curves and fillets must be adequate in strength and rigidly braced. Forms must be set on firm material cut true to grade so that each form section when placed will be firmly in contact with the underlying layer for its entire base. Forms must not be set on blocks or on built-up spots of underlying material.[Forms for overlay pavements and for other locations where forms must be set on existing pavements must be held securely in place with stakes or by other approved methods. Holes in existing pavements for form stakes must be carefully drilled without cracking or spalling the existing pavement.

Prior to setting forms for paving operations, demonstrate the proposed form setting procedures at an approved location and do not proceed further until the proposed method is approved.] Forms must remain in place at least 12 hours after the concrete has been placed. Forms must be removed without injuring the concrete.

3.4.5 Slipform Paving

The slipform paver must shape the concrete to the specified and indicated cross section in one pass, and must finish the surface and edges so that only a very minimum amount of hand finishing is required. Dowels must not be installed by dowel inserters attached to the paver or by any other means of inserting the dowels into the plastic concrete.[If a keyway is required, a 26 gauge thick metal keyway liner must be installed as the keyway is extruded.[The keyway liner must be protected and must remain in place and become part of the joint.]]

3.4.6 Placing Reinforcing Steel

Reinforcement must be positioned on suitable chairs securely fastened to the subgrade prior to concrete placement.[If reinforcing for Continuously Reinforced Concrete Pavement (CRCP) is required, the entire operating procedure and equipment proposed must be submitted for approval at least 30 days prior to proposed start of paving.]

3.4.7 Placing Dowels and Tie Bars

Dowels must be installed with alignment not greater than 1/8 inch per ft. Except as otherwise specified below, location of dowels must be within a horizontal tolerance of plus or minus 5/8 inch and a vertical tolerance of plus or minus 3/16 inch. The portion of each dowel intended to move within the concrete or expansion cap must be painted with one coat of rust inhibiting primer paint, and then oiled just prior to placement. [Dowels] [and tie bars] in joints must be omitted when the center of the [dowel] [tie bar] is located within a horizontal distance from an intersecting joint equal to or less than one-fourth of the slab thickness.

3.4.7.1 Contraction Joints

[Dowels] [and] [tie bars] in longitudinal and transverse contraction joints within the paving lane must be held securely in place by means of rigid metal basket assemblies. The [dowels] [and tie bars] must be welded to the assembly or held firmly by mechanical locking arrangements that will prevent them from becoming distorted during paving operations. The basket assemblies must be held securely in the proper location by means of suitable anchors.

3.4.7.2 Construction Joints-Fixed Form Paving

Installation of [dowels] [and tie bars] must be by the bonded-in-place method, supported by means of devices fastened to the forms. Installation by removing and replacing in preformed holes will not be permitted.

3.4.7.3 Dowels Installed in Hardened Concrete

Installation must be by bonding the dowels into holes drilled into the hardened concrete. Holes approximately 1/8 inch greater in diameter than the dowels must be drilled into the hardened concrete. Dowels must be bonded in the drilled holes using epoxy resin injected at the back of the

hole before installing the dowel and extruded to the collar during insertion of the dowel so as to completely fill the void around the dowel. Application by buttering the dowel is not permitted. The dowels must be held in alignment at the collar of the hole, after insertion and before the grout hardens, by means of a suitable metal or plastic collar fitted around the dowel. The vertical alignment of the dowels must be checked by placing the straightedge on the surface of the pavement over the top of the dowel and measuring the vertical distance between the straightedge and the beginning and ending point of the exposed part of the dowel.[Where tie bars are required in longitudinal construction joints of slipform pavement, bent tie bars must be installed at the paver, in front of the transverse screed or extrusion plate. If tie bars are required, a standard keyway must be constructed, and the bent tie bars must be inserted into the plastic concrete through a 26 gauge thick metal keyway liner. Tie bars must not be installed in preformed holes. The keyway liner must be protected and must remain in place and become part of the joint. Before placement of the adjoining paving lane, the tie bars must be straightened, without spalling the concrete around the bar.]

3.4.7.4 Expansion Joints

Dowels in expansion joints must be installed by the bonded-in-place method or by bonding into holes drilled in hardened concrete, using procedures specified above.

3.5 FINISHING CONCRETE

Start finishing operations immediately after placement of concrete. Use finishing machine, except hand finishing may be used in emergencies and for concrete slabs in inaccessible locations or of such shapes or sizes that machine finishing is impracticable. Finish pavement surface on both sides of a joint to the same grade. Finish formed joints from a securely supported transverse bridge. Provide hand finishing equipment for use at all times. Transverse and longitudinal surface tolerances must not exceed 1/4 inch in 10 feet.

3.5.1 Side Form Finishing

Strike off and screed concrete to the required [crown] [slope] and cross-section by a power-driven transverse finishing machine. Transverse rotating tube or pipe is not permitted unless approved by the Contracting Officer. Elevation of concrete must be such that, when consolidated and finished, pavement surface will be adequately consolidated and at the required grade. Equip finishing machine with two screeds which are readily and accurately adjustable for changes in pavement [crown] [slope] and compensation for wear and other causes. Make as many passes over each area of pavement and at such intervals as necessary to give proper compaction, retention of coarse aggregate near the finished surface, and a surface of uniform texture, true to grade and [crown] [slope]. Do not permit excessive operation over an area, which will result in an excess of mortar and water being brought to the surface.

3.5.1.1 Equipment Operation

Maintain the travel of machine on the forms without lifting, wobbling, or other variation of the machine which tend to affect the precision of concrete finish. Keep the tops of the forms clean by a device attached to the machine. During the first pass of the finishing machine, maintain a uniform ridge of concrete ahead of the front screed for its entire length.

3.5.1.2 Joint Finish

Before concrete is hardened, correct edge slump of pavement, exclusive of edge rounding, in excess of 0.02 foot. Finish concrete surface on each side of construction joints to the same plane, and correct deviations before newly placed concrete has hardened.

3.5.1.3 Hand Finishing

Strike-off and screed surface of concrete to elevations slightly above finish grade so that when concrete is consolidated and finished pavement surface is at the indicated elevation. Vibrate entire surface until required compaction and reduction of surface voids is secured with a strike-off template.

3.5.1.4 Longitudinal Floating

After initial finishing, further smooth and consolidate concrete by means of hand-operated longitudinal floats. Use floats that are not less than 12 feet long and 6 inches wide and stiffened to prevent flexing and warping.

3.5.2 Texturing

Before the surface sheen has disappeared and before the concrete hardens, the surface of the pavement must be given a texture as described herein. Following initial texturing on the first day of placement, the Placing Foreman, Contracting Officer representative, and a representative of the Using Agency must inspect the texturing for compliance with design requirements. After curing is complete, all textured surfaces must be thoroughly power broomed to remove all debris.[Transverse texturing must produce grooves in straight lines across each lane within a tolerance of plus or minus 1/2 inch of a true line.] The concrete in areas of recesses for tie-down anchors, lighting fixtures, and other outlets in the pavement must be finished to provide a surface of the same texture as the surrounding area.

[3.5.2.1 Burlap Drag Finish

Before concrete becomes non-plastic, finish the surface of the slab by dragging on the surface a strip of clean, wet burlap measuring from 3 to 10 feet long and 2 feet wider than the width of the pavement. Select dimension of burlap drag so that at least 3 feet of the material is in contact with the pavement. Drag the surface so as to produce a finished surface with a fine granular or sandy texture without leaving disfiguring marks.

][3.5.2.2 Brooming

Finish the surface of the slab by brooming the surface with a new wire broom at least 18 inches wide. Gently pull the broom over the surface of the pavement from edge to edge just before the concrete becomes non-plastic. Slightly overlap adjacent strokes of the broom. Broom perpendicular to centerline of pavement so that corrugations produced will be uniform in character and width, and not more than 1/16 inch in depth. Broomed surface must be free from porous spots, irregularities, depressions, and small pockets or rough spots such as may be caused by accidentally disturbing particles of coarse aggregate embedded near the

surface.

][3.5.2.3 Wire-Comb Texturing

Surface texture transverse to the pavement center line must be applied using a mechanical wire comb drag. The comb must be capable of traversing the full width of the pavement in a single pass at a uniform speed and with a uniform pressure. Successive passes of the comb must be overlapped the minimum necessary to obtain a continuous and uniformly textured surface. The scores must be 1/16 to 3/16 inch deep, 1/16 to 1/8 inch wide, and spaced 3/8 inch apart.

][3.5.2.4 Surface Grooving

The areas indicated on the drawings must be grooved with a spring tine drag producing individual grooves 1/4 inch deep and 1/4 inch wide at a spacing between groove centerlines of 2 inches. These grooves must be cut perpendicular to the centerline. Before grooving begins, the concrete must be allowed to stiffen sufficiently to prevent dislodging of aggregate. Grooves must not be cut within 6 inches of a transverse joint or crack.

]3.5.3 Edging

At the time the concrete has attained a degree of hardness suitable for edging, carefully finish slab edges, including edges at formed joints, with an edge having a maximum radius of 1/8 inch.[When brooming is specified for the final surface finish, edge transverse joints before starting brooming, then operate broom to obliterate as much as possible the mark left by the edging tool without disturbing the rounded corner left by the edger.] Clean by removing loose fragments and soupy mortar from corners or edges of slabs which have crumbled and areas which lack sufficient mortar for proper finishing. Refill voids solidly with a mixture of suitable proportions and consistency and refinish. Remove unnecessary tool marks and edges. Remaining edges must be smooth and true to line.

3.5.4 Repair of Surface Defects

Follow guidance of ACI 301.

3.6 CURING AND PROTECTION

Protect concrete adequately from injurious action by sun, rain, flowing water, [frost,] mechanical injury, tire marks and oil stains, and do not allow it to dry out from the time it is placed until the expiration of the minimum curing periods specified herein. Use White-Burlap-Polyethylene Sheet or liquid membrane-forming compound, except as specified otherwise herein. Do not use membrane-forming compound on surfaces where its appearance would be objectionable, on surfaces to be painted, where coverings are to be bonded to concrete, or on concrete to which other concrete is to be bonded. Maintain temperature of air next to concrete above 40 degrees F for the full curing periods.

3.6.1 White-Burlap-Polyethylene Sheet

Wet entire exposed surface thoroughly with a fine spray of water, saturate burlap but do not have excessive water dripping off the burlap and then cover concrete with White-Burlap-Polyethylene Sheet, burlap side down.

Lay sheets directly on concrete surface and overlap 12 inches. Make sheeting not less than 18 inches wider than concrete surface to be cured, and weight down on the edges and over the transverse laps to form closed joints. Repair or replace sheets when damaged during curing. Check daily to assure burlap has not lost all moisture. If moisture evaporates, resaturate burlap and re-place on pavement (re-saturation and re-placing must take no longer than 10 minutes per sheet). Leave sheeting on concrete surface to be cured for at least 7 days.

3.6.2 Liquid Membrane-Forming Compound Curing

Apply compound immediately after surface loses its water sheen and has a dull appearance and before joints are sawed. Agitate curing compound thoroughly by mechanical means during use and apply uniformly in a two-coat continuous operation by suitable power-spraying equipment. Total coverage for the two coats must be at least one gallon of undiluted compound per 200 square feet. Compound must form a uniform, continuous, coherent film that will not check, crack, or peel and must be free from pinholes or other imperfections. Apply an additional coat of compound immediately to areas where film is defective. Respray concrete surfaces that are subject to heavy rainfall within 3 hours after curing compound has been applied in the same manner.

3.6.2.1 Protection of Treated Surfaces

Keep concrete surfaces to which liquid membrane-forming compounds have been applied free from vehicular traffic and other sources of abrasion for not less than 72 hours. Foot traffic is allowed after 24 hours for inspection purposes. Maintain continuity of coating for entire curing period and repair damage to coating immediately.

[3.6.3 Liquid Chemical Sealer-Hardener

Apply sealer-hardener to interior floors not receiving floor covering and floors located under access flooring. Apply the sealer-hardener in accordance with manufacturer's recommendations. Seal or cover joints and openings in which joint sealant is to be applied as required by the joint sealant manufacturer. The sealer-hardener must not be applied until the concrete has been moist cured and has aged for a minimum of 30 days. Apply a minimum of two coats of sealer-hardener.

]3.7 FIELD QUALITY CONTROL

3.7.1 Sampling

The Contractor's approved laboratory must collect samples of fresh concrete in accordance with ASTM C172/C172M during each working day as required to perform tests specified herein. Make test specimens in accordance with ASTM C31/C31M.

3.7.2 Consistency Tests

The Contractor's approved laboratory must perform concrete slump tests in accordance with ASTM C143/C143M. Take samples for slump determination from concrete during placement. Perform tests at the beginning of a concrete placement operation and for each batch (minimum) or every 20 cubic yards (maximum) of concrete to ensure that specification requirements are met. In addition, perform tests each time test beams and cylinders are made.

3.7.3 Flexural Strength Tests

The Contractor's approved laboratory must test for flexural strength in accordance with ASTM C78/C78M. Make four test specimens for each set of tests. Test two specimens at [7][14] days, and the other two at [28] days. Concrete strength will be considered satisfactory when the minimum of the [28]-day test results equals or exceeds the specified [28]-day flexural strength, and no individual strength test is less than [550] [_____] pounds per square inch. If the ratio of the [7][28]-day strength test to the specified [28]-day strength is less than 65 percent, make necessary adjustments for conformance. Frequency of flexural tests on concrete beams must be not less than four test beams for each 50 cubic yards of concrete, or fraction thereof, placed. Concrete which is determined to be defective, based on the strength acceptance criteria therein, must be removed and replaced with acceptable concrete.

3.7.4 Air Content Tests

Test air-entrained concrete for air content at the same frequency as specified for slump tests. Determine percentage of air in accordance with ASTM C231/C231M on samples taken during placement of concrete in forms.

3.7.5 Surface Testing

Surface testing for surface smoothness [, edge slump] and plan grade must be performed as indicated below by the Testing Laboratory. The measurements must be properly referenced in accordance with paving lane identification and stationing, and a report given to the Contracting Officer within 24 hours after measurement is made. A final report of surface testing, signed by a Registered Engineer, containing all surface measurements and a description of all actions taken to correct deficiencies, must be provided to the Contracting Officer upon conclusion of surface testing.

3.7.5.1 Surface Smoothness Requirements

Surface smoothness must be measured every [_____] square feet. The finished surfaces of the pavements must have no abrupt change of 1/8 inch or more, and all pavements must be within the tolerances specified when checked with a 12 foot straightedge: 1/5 inch longitudinal and 1/4 inch transverse directions for roads and streets and 1/4 inch for both directions for other concrete surfaces, such as parking areas.

3.7.5.2 Surface Smoothness Testing Method

The surface of the pavement must be tested with the straightedge to identify all surface irregularities exceeding the tolerances specified above. The straightedge must be 12 feet and be constructed of aluminum or other lightweight metal and must have blades of box or box-girder cross section with flat bottom reinforced to ensure rigidity and accuracy. Straightedges must have handles to facilitate movement on pavement. The entire area of the pavement must be tested in both a longitudinal and a transverse direction on parallel lines approximately 15 feet apart. The straightedge must be held in contact with the surface and moved ahead one-half the length of the straightedge for each successive measurement. The amount of surface irregularity must be determined by placing the straightedge on the pavement surface and allowing it to rest upon the two highest spots covered by its length and measuring the maximum

gap between the straightedge and the pavement surface, in the area between these two high points.

3.7.6 Plan Grade Testing and Conformance

The surfaces must vary not more than 0.06 foot above or below the plan grade line or elevation indicated. Each pavement category must be checked for conformance with plan grade requirements by running lines of levels at intervals to determine the elevation at each joint intersection.

3.7.7 Test for Pavement Thickness

Full depth cores of 4 inch diameter must be taken of concrete pavement every [_____] square feet to measure thickness.

3.7.8 Reinforcement

Inspect reinforcement prior to installation to assure it is free of loose flaky rust, loose scale, oil, mud, or other objectionable material.

3.7.9 Dowels

Inspect dowel placement prior to placing concrete to assure that dowels are of the size indicated, and are spaced, aligned and painted and oiled as specified. Dowels must not deviate from vertical or horizontal alignment after concrete has been placed by more than 1/8 inch per foot.

-- End of Section --

SECTION 32 16 19

CONCRETE CURBS, GUTTERS AND SIDEWALKS
05/18

PART 1 GENERAL

1.1 UNIT PRICES

1.1.1 Measurement

1.1.1.1 Sidewalks

The quantities of sidewalks to be paid for will be the number of square yards of each depth of sidewalk constructed as indicated.

1.1.1.2 Curbs and Gutters

The quantities of curbs and gutters to be paid for will be the number of linear feet of each cross section constructed as indicated, measured along the face of the curb at the gutter line.

1.1.2 Payment

1.1.2.1 Sidewalks

Payment of the quantities of sidewalks measured as specified will be at the Contract unit price per square yard of the thickness specified.

1.1.2.2 Curbs and Gutters

Payment of the quantities of curbs and gutters measured as specified will be at the Contract unit price per linear foot of each cross section.

1.2 REFERENCES

The publications listed below form a part of this specification to the extent referenced. The publications are referred to within the text by the basic designation only.

AMERICAN ASSOCIATION OF STATE HIGHWAY AND TRANSPORTATION OFFICIALS (AASHTO)

AASHTO M 182	(2005; R 2017) Standard Specification for Burlap Cloth Made from Jute or Kenaf and Cotton Mats

ASTM INTERNATIONAL (ASTM)

ASTM A615/A615M	(2016) Standard Specification for Deformed and Plain Carbon-Steel Bars for Concrete Reinforcement
ASTM A1064/A1064M	(2017) Standard Specification for Carbon-Steel Wire and Welded Wire Reinforcement, Plain and Deformed, for Concrete

ASTM C31/C31M	(2019) Standard Practice for Making and Curing Concrete Test Specimens in the Field
ASTM C143/C143M	(2015) Standard Test Method for Slump of Hydraulic-Cement Concrete
ASTM C171	(2016) Standard Specification for Sheet Materials for Curing Concrete
ASTM C172/C172M	(2017) Standard Practice for Sampling Freshly Mixed Concrete
ASTM C173/C173M	(2016) Standard Test Method for Air Content of Freshly Mixed Concrete by the Volumetric Method
ASTM C231/C231M	(2017a) Standard Test Method for Air Content of Freshly Mixed Concrete by the Pressure Method
ASTM C309	(2011) Standard Specification for Liquid Membrane-Forming Compounds for Curing Concrete
ASTM C920	(2018) Standard Specification for Elastomeric Joint Sealants
ASTM D1751	(2004; E 2013; R 2013) Standard Specification for Preformed Expansion Joint Filler for Concrete Paving and Structural Construction (Nonextruding and Resilient Bituminous Types)
ASTM D1752	(2018) Standard Specification for Preformed Sponge Rubber, Cork and Recycled PVC Expansion Joint Fillers for Concrete Paving and Structural Construction
ASTM D5893/D5893M	(2016) Standard Specification for Cold Applied, Single Component, Chemically Curing Silicone Joint Sealant for Portland Cement Concrete Pavements

INTERNATIONAL CODE COUNCIL (ICC)

ICC A117.1 COMM	(2017) Standard And Commentary Accessible and Usable Buildings and Facilities

1.3 SUBMITTALS

Government approval is required for submittals with a "G" designation; submittals not having a "G" designation are for Contractor Quality Control approval. Submittals with an "S" are for inclusion in the Sustainability eNotebook, in conformance to Section 01 33 29 SUSTAINABILITY REPORTING. Submit the following in accordance with Section 01 33 00 SUBMITTAL PROCEDURES:

SD-03 Product Data

Concrete

SD-06 Test Reports

Field Quality Control

1.4 EQUIPMENT, TOOLS, AND MACHINES

1.4.1 General Requirements

Plant, equipment, machines, and tools used in the work will be subject to approval and must be maintained in a satisfactory working condition at all times. Use equipment capable of producing the required product, meeting grade controls, thickness control and smoothness requirements as specified. Discontinue using equipment that produces unsatisfactory results. Allow the Contracting Officer access at all times to the plant and equipment to ensure proper operation and compliance with specifications.

1.4.2 Slip Form Equipment

Slip form paver or curb forming machines, will be approved based on trial use on the job and must be self-propelled, automatically controlled, crawler mounted, and capable of spreading, consolidating, and shaping the plastic concrete to the desired cross section in one pass.

1.5 ENVIRONMENTAL REQUIREMENTS

1.5.1 Placing During Cold Weather

Do not place concrete when the air temperature reaches 40 degrees F and is falling, or is already below that point. Placement may begin when the air temperature reaches 35 degrees F and is rising, or is already above 40 degrees F. Make provisions to protect the concrete from freezing during the specified curing period. If necessary to place concrete when the temperature of the air, aggregates, or water is below 35 degrees F, placement and protection must be approved in writing. Approval will be contingent upon full conformance with the following provisions. Prepare and protect the underlying material so that it is entirely free of frost when the concrete is deposited. Heat mixing water and aggregates as necessary to result in the temperature of the in-place concrete being between 50 and 85 degrees F. Methods and equipment for heating must be approved. Use only aggregates that are free of ice, snow, and frozen lumps before entering the mixer. Provide covering or other means as needed to maintain the concrete at a temperature of at least 50 degrees F for not less than 72 hours after placing, and at a temperature above freezing for the remainder of the curing period.

1.5.2 Placing During Warm Weather

The temperature of the concrete as placed must not exceed 85 degrees F except where an approved retarder is used. Cool the mixing water and aggregates as necessary to maintain a satisfactory placing temperature. The placing temperature must not exceed 95 degrees F at any time.

PART 2 PRODUCTS

2.1 CONCRETE

Provide concrete conforming to the applicable requirements of Section 03 30 00 CAST-IN-PLACE CONCRETE except as otherwise specified. Concrete must have a minimum compressive strength of 3500 psi at 28 days. Size of aggregate must not exceed 1-1/2 inches. Submit copies of certified delivery tickets for all concrete used in the construction.

2.1.1 Air Content

Use concrete mixtures that have an air content by volume of concrete of 5 to 7 percent, based on measurements made immediately after discharge from the mixer.

2.1.2 Slump

Use concrete with a slump of 3 inches plus or minus 1 inch for hand placed concrete or 1 inch plus or minus 1/2 inch for slipformed concrete as determined in accordance with ASTM C143/C143M.

2.1.3 Reinforcement Steel

Use reinforcement bars conforming to ASTM A615/A615M. Use wire mesh reinforcement conforming to ASTM A1064/A1064M.

2.2 CONCRETE CURING MATERIALS

2.2.1 Impervious Sheet Materials

Use impervious sheet materials conforming to ASTM C171, type optional, except that polyethylene film, if used, must be white opaque.

2.2.2 Burlap

Use burlap conforming to AASHTO M 182.

2.2.3 White Pigmented Membrane-Forming Curing Compound

Use white pigmented membrane-forming curing compound conforming to ASTM C309, Type 2.

2.3 CONCRETE PROTECTION MATERIALS

Use concrete protection materials consisting of a linseed oil mixture of equal parts, by volume, of linseed oil and either mineral spirits, naphtha, or turpentine. At the option of the Contractor, commercially prepared linseed oil mixtures, formulated specifically for application to concrete to provide protection against the action of deicing chemicals may be used, except that emulsified mixtures are not acceptable.

2.4 JOINT FILLER STRIPS

2.4.1 Contraction Joint Filler for Curb and Gutter

Use hard-pressed fiberboard contraction joint filler for curb and gutter.

2.4.2 Expansion Joint Filler, Premolded

Onless otherwise indicated, use 1/2 inch thick premolded expansion joint filler conforming to ASTM D1751 or ASTM D1752.

2.5 JOINT SEALANTS

Use cold-applied joint sealant conforming to ASTM C920 or ASTM D5893/D5893M.

2.6 FORM WORK

Design and construct form work to ensure that the finished concrete will conform accurately to the indicated dimensions, lines, and elevations, and within the tolerances specified. Use wood or steel forms that are straight and of sufficient strength to resist springing during depositing and consolidating concrete.

2.6.1 Wood Forms

Use forms that are surfaced plank, 2 inches nominal thickness, straight and free from warp, twist, loose knots, splits or other defects. Use forms with a nominal length of 10 feet. Radius bends may be formed with 3/4 inch boards, laminated to the required thickness.

2.6.2 Steel Forms

Use channel-formed sections with a flat top surface and welded braces at each end and at not less than two intermediate points. Use forms with interlocking and self-aligning ends. Provide flexible forms for radius forming, corner forms, form spreaders, and fillers as needed. Use forms with a nominal length of 10 feet and that have a minimum of 3 welded stake pockets per form. Use stake pins consisting of solid steel rods with chamfered heads and pointed tips designed for use with steel forms.

2.6.3 Sidewalk Forms

Use sidewalk forms that are of a height equal to the full depth of the finished sidewalk.

2.6.4 Curb and Gutter Forms

Use curb and gutter outside forms that have a height equal to the full depth of the curb or gutter. Use rigid forms for curb returns, except that benders or thin plank forms may be used for curb or curb returns with a radius of 10 feet or more, where grade changes occur in the return, or where the central angle is such that a rigid form with a central angle of 90 degrees cannot be used. Back forms for curb returns may be made of 1-1/2 inch benders, for the full height of the curb, cleated together. In lieu of inside forms for curbs, a curb "mule" may be used for forming and finishing this surface, provided the results are approved.

2.7 Detectable Warning System

Detectable Warning Systems shown on the Contract plans are to meet requirements of ICC A117.1 COMM - Section 705.

PART 3 EXECUTION

3.1 SUBGRADE PREPARATION

Construct subgrade to the specified grade and cross section prior to concrete placement.

3.1.1 Sidewalk Subgrade

Place and compact the subgrade in accordance with Section 31 00 00 EARTHWORK . Test the subgrade for grade and cross section with a template extending the full width of the sidewalk and supported between side forms.

3.1.2 Curb and Gutter Subgrade

Place and compact the subgrade in accordance with Section 31 00 00 EARTHWORK . Test the subgrade for grade and cross section by means of a template extending the full width of the curb and gutter. Use subgrade materials equal in bearing quality to the subgrade under the adjacent pavement.

3.1.3 Maintenance of Subgrade

Maintain subgrade in a smooth, compacted condition in conformity with the required section and established grade until the concrete is placed. The subgrade must be in a moist condition when concrete is placed. Prepare and protect subgrade so that it is free from frost when the concrete is deposited.

3.2 FORM SETTING

Set forms to the indicated alignment, grade and dimensions. Hold forms rigidly in place by a minimum of 3 stakes per form placed at intervals not to exceed 4 feet. Use additional stakes and braces at corners, deep sections, and radius bends, as required. Use clamps, spreaders, and braces where required to ensure rigidity in the forms. Remove forms in a manner that will not injure the concrete. Do not use bars or heavy tools against the concrete when removing the forms. Promptly and satisfactorily repair concrete found to be defective after form removal. Clean forms and coat with form oil or biodegradable form release agent each time before concrete is placed. Wood forms may, instead, be thoroughly wetted with water before concrete is placed, except that with probable freezing temperatures, oiling is mandatory.

3.2.1 Sidewalks

Set forms for sidewalks with the upper edge true to line and grade with an allowable tolerance of 1/8 inch in any 10 foot long section. After forms are set, grade and alignment must be checked with a 10 foot straightedge. Sidewalks must have a transverse slope as indicated Do not remove side forms less than 12 hours after finishing has been completed.

3.2.2 Curbs and Gutters

Remove forms used along the front of the curb not less than 2 hours nor more than 6 hours after the concrete has been placed. Do not remove forms used along the back of curb until the face and top of the curb have been finished, as specified for concrete finishing. Do not remove gutter forms while the concrete is sufficiently plastic to slump in any direction.

3.3 SIDEWALK CONCRETE PLACEMENT AND FINISHING

3.3.1 Formed Sidewalks

Place concrete in the forms in one layer. When consolidated and finished, the sidewalks must be of the thickness indicated. Use a strike-off guided

by side forms after concrete has been placed in the forms to bring the surface to proper section to be compacted. Consolidate concrete by tamping and spading or with an approved vibrator. Finish the surface to grade with a strike off.

3.3.2 Concrete Finishing

After straightedging, when most of the water sheen has disappeared, and just before the concrete hardens, finish the surface with a wood or magnesium float or darby to a smooth and uniformly fine granular or sandy texture free of waves, irregularities, or tool marks. Produce a scored surface by brooming with a fiber-bristle brush in a direction transverse to that of the traffic, followed by edging.

3.3.3 Edge and Joint Finishing

Finish all slab edges, including those at formed joints, with an edger having a radius of 1/8 inch. Edge transverse joints before brooming. Eliminate the flat surface left by the surface face of the edger with brooming. Clean and solidly fill corners and edges which have crumbled and areas which lack sufficient mortar for proper finishing with a properly proportioned mortar mixture and then finish.

3.3.4 Surface and Thickness Tolerances

Finished surfaces must not vary more than 5/16 inch from the testing edge of a 10-foot straightedge. Permissible deficiency in section thickness will be up to 1/4 inch.

3.4 CURB AND GUTTER CONCRETE PLACEMENT AND FINISHING

3.4.1 Formed Curb and Gutter

Place concrete to the required section in a single lift. Consolidate concrete using approved mechanical vibrators. Curve shaped gutters must be finished with a standard curb "mule".

3.4.2 Curb and Gutter Finishing

Approved slipformed curb and gutter machines may be used in lieu of hand placement.

3.4.3 Concrete Finishing

Float and finish exposed surfaces with a smooth wood float until true to grade and section and uniform in texture. Brush floated surfaces with a fine-hair brush using longitudinal strokes. Round the edges of the gutter and top of the curb with an edging tool to a radius of 1/2 inch. Immediately after removing the front curb form, rub the face of the curb with a wood or concrete rubbing block and water until blemishes, form marks, and tool marks have been removed. Brush the front curb surface, while still wet, in the same manner as the gutter and curb top. Finish the top surface of gutter and entrance to grade with a wood float.

3.4.4 Joint Finishing

Finish curb edges at formed joints as indicated.

3.4.5 Surface and Thickness Tolerances

Finished surfaces must not vary more than 1/4 inch from the testing edge of a 10-foot straightedge. Permissible deficiency in section thickness will be up to 1/4 inch.

3.5 SIDEWALK JOINTS

Construct sidewalk joints to divide the surface into rectangular areas. Space transverse contraction joints at a distance equal to the sidewalk width or 5 feet on centers, whichever is less, and continuous across the slab. Construct longitudinal contraction joints along the centerline of all sidewalks 10 feet or more in width. Construct transverse expansion joints at sidewalk returns and opposite expansion joints in adjoining curbs. Where the sidewalk is not in contact with the curb, install transverse expansion joints as indicated. Form expansion joints around structures and features which project through or into the sidewalk pavement, using joint filler of the type, thickness, and width indicated. Expansion joints are not required between sidewalks and curb that abut the sidewalk longitudinally.

3.5.1 Sidewalk Contraction Joints

Form contraction joints in the fresh concrete by cutting a groove in the top portion of the slab to a depth of at least one-fourth of the sidewalk slab thickness. Unless otherwise approved or indicated, either use a jointer to cut the groove or saw a groove in the hardened concrete with a power-driven saw. Construct sawed joints by sawing a groove in the concrete with a 1/8 inch blade. Provide an ample supply of saw blades on the jobsite before concrete placement is started. Provide at least one standby sawing unit in good working order at the jobsite at all times during the sawing operations.

3.5.2 Sidewalk Expansion Joints

Form expansion joints using 1/2 inch joint filler strips. Joint filler in expansion joints surrounding structures and features within the sidewalk may consist of preformed filler material conforming to ASTM D1752 or building paper. Hold joint filler in place with steel pins or other devices to prevent warping of the filler during floating and finishing. Immediately after finishing operations are completed, round joint edges using an edging tool having a radius of 1/8 inch. Remove any concrete over the joint filler. At the end of the curing period, clean the top of expansion joints and fill with cold-applied joint sealant. Use joint sealant that is gray or stone in color. Thoroughly clean the joint opening before the sealing material is placed. Do not spill sealing material on exposed surfaces of the concrete. Apply joint sealing material only when the concrete at the joint is surface dry and atmospheric and concrete temperatures are above 50 degrees F. Immediately remove any excess material on exposed surfaces of the concrete and clean the concrete surfaces.

3.5.3 Reinforcement Steel Placement

Accurately and securely fasten reinforcement steel in place with suitable supports and ties before the concrete is placed.

3.6 CURB AND GUTTER JOINTS

Construct curb and gutter joints at right angles to the line of curb and

gutter.

3.6.1 Contraction Joints

Construct contraction joints directly opposite contraction joints in abutting portland cement concrete pavements and spaced so that monolithic sections between curb returns will not be less than 5 feet nor greater than 15 feet in length.

a. Construct contraction joints (except for slip forming) by means of 1/8 inch thick separators and of a section conforming to the cross section of the curb and gutter. Remove separators as soon as practicable after concrete has set sufficiently to preserve the width and shape of the joint and prior to finishing.

b. When slip forming is used, cut the contraction joints in the top portion of the gutter/curb hardened concrete in a continuous cut across the curb and gutter, using a power-driven saw. Cut the contraction joint to a depth of at least one-fourth of the gutter/curb depth using a 1/8 inch saw blade.

3.6.2 Expansion Joints

Form expansion joints by means of preformed expansion joint filler material cut and shaped to the cross section of curb and gutter. Construct expansion joints in curb and gutter directly opposite expansion joints of abutting portland cement concrete pavement using the same type and thickness of joints as joints in the pavement. Where curb and gutter do not abut portland cement concrete pavement, provide expansion joints at least 1/2 inch in width at intervals not less than 30 feet nor greater than 120 feet. Seal expansion joints immediately following curing of the concrete or as soon thereafter as weather conditions permit. Seal expansion joints and the top 1 inch depth of curb and gutter contraction-joints with joint sealant. Thoroughly clean the joint opening before the sealing material is placed. Do not spill sealing material on exposed surfaces of the concrete. Concrete at the joint must be surface dry and atmospheric and concrete temperatures must be above 50 degrees F at the time of application of joint sealing material. Immediately remove excess material on exposed surfaces of the concrete and clean concrete surfaces.

3.7 CURING AND PROTECTION

3.7.1 General Requirements

Protect concrete against loss of moisture and rapid temperature changes for at least 7 days from the beginning of the curing operation. Protect unhardened concrete from rain and flowing water. All equipment needed for adequate curing and protection of the concrete must be on hand and ready for use before actual concrete placement begins. Protect concrete as necessary to prevent cracking of the pavement due to temperature changes during the curing period.

3.7.1.1 Mat Method

Cover the entire exposed surface with two or more layers of burlap. Overlap mats at least 6 inches. Thoroughly wet the mat with water prior to placing on concrete surface and keep the mat continuously in a saturated condition and in intimate contact with concrete for not less

than 7 days.

3.7.1.2 Impervious Sheeting Method

Wet the entire exposed surface with a fine spray of water and then cover with impervious sheeting material. Lay sheets directly on the concrete surface with the light-colored side up and overlapped 12 inches when a continuous sheet is not used. Use sheeting that is not less than 18-inches wider than the concrete surface to be cured. Secure sheeting using heavy wood planks or a bank of moist earth placed along edges and laps in the sheets. Satisfactorily repair or replace sheets that are torn or otherwise damaged during curing. Sheeting must remain on the concrete surface to be cured for not less than 7 days.

3.7.1.3 Membrane Curing Method

Apply a uniform coating of white-pigmented membrane-curing compound to the entire exposed surface of the concrete as soon after finishing as the free water has disappeared from the finished surface. Coat formed surfaces immediately after the forms are removed and in no case longer than 1 hour after the removal of forms. Do not allow concrete surface to dry before application of the membrane. If drying has occurred, moisten the surface of the concrete with a fine spray of water and apply the curing compound as soon as the free water disappears. Apply curing compound in two coats by hand-operated pressure sprayers at a coverage of approximately 200 square feet/gallon for the total of both coats. Apply the second coat in a direction approximately at right angles to the direction of application of the first coat. The compound must form a uniform, continuous, coherent film that will not check, crack, or peel and must be free from pinholes or other imperfections. If pinholes, abrasion, or other discontinuities exist, apply an additional coat to the affected areas within 30 minutes. Respray concrete surfaces that are subjected to heavy rainfall within 3 hours after the curing compound has been applied by the method and at the coverage specified above. Respray areas where the curing compound is damaged by subsequent construction operations within the curing period. Take precautions necessary to ensure that the concrete is properly cured at sawed joints, and that no curing compound enters the joints. Tightly seal the top of the joint opening and the joint groove at exposed edges before the concrete in the region of the joint is resprayed with curing compound. Use a method used for sealing the joint groove that prevents loss of moisture from the joint during the entire specified curing period. Provide approved standby facilities for curing concrete pavement at a location accessible to the jobsite for use in the event of mechanical failure of the spraying equipment or other conditions that might prevent correct application of the membrane-curing compound at the proper time. Adequately protect concrete surfaces to which membrane-curing compounds have been applied during the entire curing period from pedestrian and vehicular traffic, except as required for joint-sawing operations and surface tests, and from other possible damage to the continuity of the membrane.

3.7.2 Backfilling

After curing, remove debris and backfill, grade, and compact the area adjoining the concrete to conform to the surrounding area in accordance with lines and grades indicated.

3.7.3 Protection

Protect completed concrete from damage until accepted. Repair damaged concrete and clean concrete discolored during construction. Remove and reconstruct concrete that is damaged for the entire length between regularly scheduled joints. Refinishing the damaged portion will not be acceptable. Dispose of removed material as directed.

3.7.4 Protective Coating

Apply a protective coating of linseed oil mixture to the exposed-to-view concrete surface after the curing period, if concrete will be exposed to de-icing chemicals within 6 weeks after placement. Moist cure concrete to receive a protective coating.

3.7.4.1 Application

Complete curing and backfilling operation prior to applying two coats of protective coating. Concrete must be surface dry and clean before each application. Spray apply at a rate of not more than 50 square yards/gallon for first application and not more than 70 square yards/gallon for second application, except that the number of applications and coverage for each application for commercially prepared mixture must be in accordance with the manufacturer's instructions. Protect coated surfaces from vehicular and pedestrian traffic until dry.

3.7.4.2 Precautions

Do not heat protective coating by direct application of flame or electrical heaters and protect the coating from exposure to open flame, sparks, and fire adjacent to open containers or applicators. Do not apply material at ambient or material temperatures lower than 50 degrees F.

3.8 FIELD QUALITY CONTROL

Submit copies of all test reports within 24 hours of completion of the test.

3.8.1 General Requirements

Perform the inspection and tests described and meet the specified requirements for inspection details and frequency of testing. Based upon the results of these inspections and tests, take the action and submit reports as required below, and additional tests to ensure that the requirements of these specifications are met.

3.8.2 Concrete Testing

3.8.2.1 Strength Testing

Take concrete samples in accordance with ASTM C172/C172M not less than once a day nor less than once for every 250 cubic yards of concrete placed. Mold cylinders in accordance with ASTM C31/C31M for strength testing by an approved laboratory. Each strength test result must be the average of 2 test cylinders from the same concrete sample tested at 28 days, unless otherwise specified or approved. Concrete specified on the basis of compressive strength will be considered satisfactory if the averages of all sets of three consecutive strength test results equal or exceed the specified strength, and no individual strength test result falls below the specified strength by more than 500 psi.

3.8.2.2 Air Content

Determine air content in accordance with ASTM C173/C173M or ASTM C231/C231M. Use ASTM C231/C231M with concretes and mortars made with relatively dense natural aggregates. Make two tests for air content on randomly selected batches of each class of concrete placed during each shift. Make additional tests when excessive variation in concrete workability is reported by the placing foreman or the Government inspector. Notify the placing forman if results are out of tolerance. The placing foreman must take appropriate action to have the air content corrected at the plant. Additional tests for air content will be performed on each truckload of material until such time as the air content is within the tolerance specified.

3.8.2.3 Slump Test

Perform two slump tests on randomly selected batches of each class of concrete for every 250 cubic yards, or fraction thereof, of concrete placed during each shift. Perform additional tests when excessive variation in the workability of the concrete is noted or when excessive crumbling or slumping is noted along the edges of slip-formed concrete.

3.8.3 Thickness Evaluation

Determine the anticipated thickness of the concrete prior to placement by passing a template through the formed section or by measuring the depth of opening of the extrusion template of the curb forming machine. If a slip form paver is used for sidewalk placement, construct the subgrade true to grade prior to concrete placement. The thickness will be determined by measuring each edge of the completed slab.

3.8.4 Surface Evaluation

Provide finished surfaces for each category of the completed work that are uniform in color and free of blemishes and form or tool marks.

3.9 SURFACE DEFICIENCIES AND CORRECTIONS

3.9.1 Thickness Deficiency

When measurements indicate that the completed concrete section is deficient in thickness by more than 1/4 inch the deficient section will be removed, between regularly scheduled joints, and replaced.

3.9.2 High Areas

In areas not meeting surface smoothness and plan grade requirements, reduce high areas either by rubbing the freshly finished concrete with carborundum brick and water when the concrete is less than 36 hours old or by grinding the hardened concrete with an approved surface grinding machine after the concrete is 36 hours old or more. The area corrected by grinding the surface of the hardened concrete must not exceed 5 percent of the area of any integral slab, and the depth of grinding must not exceed 1/4 inch. Remove and replace pavement areas requiring grade or surface smoothness corrections in excess of the limits specified.

3.9.3 Appearance

Exposed surfaces of the finished work will be inspected by the Contracting

Officer and deficiencies in appearance will be identified. Remove and replace areas which exhibit excessive cracking, discoloration, form marks, or tool marks or which are otherwise inconsistent with the overall appearances of the work.

3.10 DETECTABLE WARNING SYSTEM

Install Detectable Warning Systems required by Contract plans in accordance with ICC A117.1 COMM, Section 705, and by manufacturers' installation instructions.

-- End of Section --

THIS PAGE HAS BEEN INTENTIONALLY LEFT BLANK

SECTION 32 17 23

PAVEMENT MARKINGS
08/16

PART 1 GENERAL

1.1 UNIT PRICES

1.1.1 Measurement

1.1.1.1 Surface Preparation

The unit of measurement for surface preparation (cleaning) is the number of square feet of pavement surface prepared for marking and accepted by the Contracting Officer.

1.1.1.2 Pavement Striping and Markings

The unit of measurement for pavement markings is the number of square feet of reflective and/or nonreflective striping or markings actually completed and accepted by the Contracting Officer.

1.1.1.3 Raised Pavement Markers

The unit of measurement for raised pavement markers is the number actually placed as specified and approved by the Contracting Officer.

1.1.1.4 Removal of Pavement Markings on Roads and Automotive Parking Areas

The unit of measurement for removal of pavement markings is the number of square feet of pavement markings removed as specified and accepted by the Contracting Officer.

1.1.2 Payment

The quantities of surface preparation, pavement striping or markings, raised pavement markers, and removal of pavement markings determined as specified in paragraph Measurement, will be paid for at the contract unit price. The payment constitutes full compensation for furnishing all labor, materials, tools, equipment, appliances, and doing all work involved in preparing and marking the pavements as shown on the drawings. Remove and replace any striping or markings which required reflective media, but are placed without it, do not meet the stated minimum retro-reflective requirements, or with other defects, at no cost to the Government. Remove and replace striping or markings which do not conform to the required physical characteristics, alignment or location required at no cost to the Government.

1.2 REFERENCES
The publications listed below form a part of this specification to the extent referenced. The publications are referred to in the text by the basic designation only.

AMERICAN ASSOCIATION OF STATE HIGHWAY AND TRANSPORTATION OFFICIALS (AASHTO)

AASHTO M 247 (2013) Standard Specification for Glass

	Beads Used in Pavement Markings
AASHTO M 249	(2012; R2016) Standard Specification for White and Yellow Reflective Thermoplastic Striping Material (Solid Form)

ASTM INTERNATIONAL (ASTM)

ASTM D471	(2016a) Standard Test Method for Rubber Property - Effect of Liquids
ASTM D476	(2015) Dry Pigmentary Titanium Dioxide Pigments
ASTM D522/D522M	(2014) Mandrel Bend Test of Attached Organic Coatings
ASTM D638	(2014) Standard Test Method for Tensile Properties of Plastics
ASTM D695	(2010) Standard Test Method for Compressive Properties of Rigid Plastics
ASTM D711	(2010; R 2015) No-Pick-Up Time of Traffic Paint
ASTM D823	(2018) Standard Practices for Producing Films of Uniform Thickness of Paint, Coatings, and Related Products on Test Panels
ASTM D1652	(2011; E 2012) Standard Test Method for Epoxy Content of Epoxy Resins
ASTM D2074	(2007; R2013) Standard Test Methods for Total, Primary, Secondary, and Tertiary Amine Values of Fatty Amines by Alternative Indicator Method
ASTM D2240	(2015; E 2017) Standard Test Method for Rubber Property - Durometer Hardness
ASTM D2621	(1987; R 2016) Standard Test Method for Infrared Identification of Vehicle Solids from Solvent-Reducible Paints
ASTM D2697	(2003; R 2014) Volume Nonvolatile Matter in Clear or Pigmented Coatings
ASTM D3335	(1985a; R 2014) Low Concentrations of Lead, Cadmium, and Cobalt in Paint by Atomic Absorption Spectroscopy
ASTM D3718	(1985a; R 2015) Low Concentrations of Chromium in Paint by Atomic Absorption Spectroscopy
ASTM D3924	(2016) Standard Specification for Environment for Conditioning and Testing

	Paint, Varnish, Lacquer, and Related Materials
ASTM D3960	(2005; R 2013) Determining Volatile Organic Compound (VOC) Content of Paints and Related Coatings
ASTM D4060	(2019) Abrasion Resistance of Organic Coatings by the Taber Abraser
ASTM D4061	(2013) Standard Test Method for Retroreflectance of Horizontal Coatings
ASTM D4505	(2012; R 2017) Standard Specification for Preformed Retroflective Pavement Marking Tape for Extended Service Life
ASTM D4541	(2017) Standard Test Method for Pull-Off Strength of Coatings Using Portable Adhesion Testers
ASTM D6628	(2003; R 2015) Standard Specification for Color of Pavement Marking Materials
ASTM D7234	(2012) Standard Test Method for Pull-Off Adhesion Strength of Coatings on Concrete Using Portable Pull-Off Adhesion Testers
ASTM E1347	(2006; R 2011) Color and Color Difference Measurement by Tristimulus (Filter) Colorimetry
ASTM E1710	(2011) Standard Test Method for Measurement of Retroreflective Pavement Marking Materials with CEN-Prescribed Geometry Using a Portable Retroreflectometer
ASTM E2177	(2011) Standard Test Method for Measuring the Coefficient of Retroreflected Luminance (RL) of Pavement Markings in a Standard Condition of Wetness
ASTM E2302	(2003; R 2016) Standard Test Method for Measurement of the Luminance Coefficient Under Diffuse Illumination of Pavement Marking Materials Using a Portable Reflectometer
ASTM G154	(2016) Standard Practice for Operating Fluorescent Light Apparatus for UV Exposure of Nonmetallic Materials

INTERNATIONAL CONCRETE REPAIR INSTITUTE (ICRI)

ICRI 03732	(1997) Selecting and Specifying Concrete Surface Preparation for Sealers, Coatings, and Polymer Overlays

MASTER PAINTERS INSTITUTE (MPI)

MPI 32 (2012) Traffic Marking Paint, S.B.

MPI 97 (2012) Traffic Marking Paint, Latex

SOCIETY OF AUTOMOTIVE ENGINEERS INTERNATIONAL (SAE)

SAE AMS-STD-595A (2017) Colors used in Government Procurement

U.S. FEDERAL AVIATION ADMINISTRATION (FAA)

FAA AC 150/5370-10 (2018; Rev H; Errata 1 2019) Standard Specifications for Construction of Airports

U.S. FEDERAL HIGHWAY ADMINISTRATION (FHWA)

MUTCD (2015) Manual on Uniform Traffic Control Devices

U.S. GENERAL SERVICES ADMINISTRATION (GSA)

FS TT-B-1325 (Rev D; Notice 1; Notice 2 2017) Beads (Glass Spheres) Retro-Reflective (Metric)

1.3 SUBMITTALS

Government approval is required for submittals with a "G" designation; submittals not having a "G" designation are for information only or as otherwise designated. When used, a designation following the "G" designation identifies the office that will review the submittal for the Government. Submittals with an "S" are for inclusion in the Sustainability eNotebook, in conformance to Section 01 33 29 SUSTAINABILITY REPORTING. Submit the following in accordance with Section 01 33 00 SUBMITTAL PROCEDURES:

SD-03 Product Data

Surface Preparation Equipment List; G

Application Equipment List; G

Exterior Surface Preparation

Safety Data Sheets; G

Reflective media for airfields; G

Reflective media for roads; G

Waterborne Paint; G

Solventborne Paint; G

Thermoplastic compound; G

Raised Pavement Markers Primers and Adhesives; G

SD-06 Test Reports

Reflective Media for Airfields; G

Reflective Media for Roads; G

Waterborne Paint; G

Solventborne Paint; G

High Build Acrylic Coating (HBAC); G

Thermoplastic Compound; G

Raised Pavement Markers Primers and Adhesives; G

Test Reports

SD-07 Certificates

Qualifications; G

Reflective Media for Airfields

Reflective Media for Roads

Waterborne Paint

Solventborne Paint

Volatile Organic Compound, (VOC); G

Thermoplastic Compound

SD-08 Manufacturer's Instructions

Waterborne Paint; G

Solventborne Paint; G

Thermoplastic Compound; G

1.4 QUALITY ASSURANCE

1.4.1 Regulatory Requirements

Submit certificate stating that the proposed pavement marking paint meets the Volatile Organic Compound, (VOC) regulations of the local Air Pollution Control District having jurisdiction over the geographical area in which the project is located. Submit Safety Data Sheets for each product.

1.4.2 Qualifications

Submit documentation certifying that pertinent personnel are qualified for equipment operation and handling of applicable chemicals. The documentation should include experience on five projects of similar size and scope with references for all personnel.

1.5 DELIVERY AND STORAGE

Deliver paint materials, thermoplastic compound materials, and reflective media in original sealed containers that plainly show the designated name, specification number, batch number, color, date of manufacture, manufacturer's directions, and name of manufacturer.

Provide storage facilities at the job site, only in areas approved by the Contracting Officer, for maintaining materials at temperatures recommended by the manufacturer. Make available paint stored at the project site or segregated at the source for sampling not less than 30 days prior to date of required approval for use to allow sufficient time for testing. Notify the Contracting Officer when paint is available for sampling.

1.6 PROJECT/SITE CONDITIONS

1.6.1 Environmental Requirements

1.6.1.1 Weather Limitations for Application

Apply pavement markings to clean, dry surfaces, and unless otherwise approved, only when the air and pavement surface temperature is at least 5 degrees F above the dew point and the air and pavement temperatures are within the limits recommended by the pavement marking manufacturer. Allow pavement surfaces to dry after water has been used for cleaning or rainfall has occurred prior to striping or marking. Test the pavement surface for moisture before beginning work each day and after cleaning. Do not commence marking until the pavement is sufficiently dry and the pavement condition has been approved by the Contracting Officer. Employ the "plastic wrap method" to test the pavement for moisture as specified in paragraph TESTING FOR MOISTURE.

1.6.1.2 Weather Limitations for Removal of Pavement Markings on Roads and Automotive Parking Areas

Pavement surface must be free of snow, ice, or slush; with a surface temperature of at least 40 degrees F and rising at the beginning of operations, except those involving shot or sand blasting or grinding. Cease operation during thunderstorms, or during rainfall, except for waterblasting and removal of previously applied chemicals. Cease waterblasting where surface water accumulation alters the effectiveness of material removal.

1.6.2 Traffic Controls

Place warning signs conforming to MUTCD near the beginning of the worksite and well ahead of the worksite for alerting approaching traffic from both directions. Place small markers along newly painted lines or freshly placed raised markers to control traffic and prevent damage to newly painted surfaces or displacement of raised pavement markers. Mark painting equipment with large warning signs indicating slow-moving painting equipment in operation.

When traffic must be rerouted or controlled to accomplish the work, provide necessary warning signs, flag persons, and related equipment for the safe passage of vehicles.

PART 2 PRODUCTS

2.1 EQUIPMENT

2.1.1 Surface Preparation and Paint Removal

2.1.1.1 Surface Preparation and Paint Removal Equipment for Airfield Pavements

Prepare all airfield surfaces and remove paint from airfield surfaces in accordance with UFGS 32 01 11.51 Rubber and Paint Removal From Airfield Pavements. Provide submittals in accordance with UFGS 32 01 11.51 Rubber and Paint Removal From Airfield Pavements.

2.1.1.2 Surface Preparation Equipment for Roads and Automotive Parking Areas

Submit a surface preparation equipment list by serial number, type, model, and manufacturer. Include descriptive data indicating area of coverage per pass, pressure adjustment range, tank and flow capacities, and safety precautions required for the equipment operation. Mobile equipment must allow for removal of markings without damaging the pavement surface or joint sealant. Maintain machines, tools, and equipment used in the performance of the work in satisfactory operating condition.

2.1.1.2.1 Waterblasting Equipment

Use mobile waterblasting equipment capable of producing a pressurized stream of water that effectively removes paint from the pavement surface without significantly damaging the pavement. Provide equipment, tools, and machinery which are safe and in good working order at all times.

2.1.1.2.2 Grinding or Scarifying Equipment

Use equipment capable of removing surface contaminates, paint build-up, or extraneous markings from the pavement surface without leaving any residue. Clean the surface by hydro blast to remove surface contaminates and ash after a weed torch is used to remove paint.

2.1.1.2.3 Chemical Removal Equipment

Use chemical equipment capable of applying and removing chemicals and paint from the pavement surface, leaving only non-toxic biodegradable residue without scarring or other damage to the pavement or joints and joint seals.

2.1.2 Application Equipment

Submit application equipment list appropriate for the material(s) to be used. Include manufacturer's descriptive data and certification for the planned use that indicates area of coverage per pass, pressure adjustment range, tank and flow capacities, and all safety precautions required for operating and maintaining the equipment. Provide and maintain machines, tools, and equipment used in the performance of the work in satisfactory operating condition, or remove them from the work site. Provide mobile and maneuverable application equipment to the extent that straight lines can be followed and normal curves can be made in a true arc.

2.1.2.1 Paint Application Equipment

2.1.2.1.1 Hand-Operated, Push-Type Machines

Provide hand-operated push-type applicator machine of a type commonly used for application of water based paint or two-component, chemically curing paint, thermoplastic, or preformed tape, to pavement surfaces for small marking projects, such as legends and cross-walks, automotive parking areas, or surface painted signs. Provide applicator machine equipped with the necessary tanks and spraying nozzles capable of applying paint uniformly at coverage specified. Hand operated spray guns may be used in areas where push-type machines cannot be used.

2.1.2.1.2 Self-Propelled or Mobile-Drawn Spraying Machines

Provide self-propelled or mobile-drawn spraying machine with suitable arrangements of atomizing nozzles and controls to obtain the specified results. Provide machine having a speed during application capable of applying the stripe widths indicated at the paint coverage rate specified herein and of even uniform thickness with clear-cut edges.

2.1.2.1.2.1 Road Marking

Provide equipment used for marking roads capable of placing the prescribed number of lines at a single pass as solid lines, intermittent lines, or a combination of solid and intermittent lines using a maximum of three different colors of paint as specified.

2.1.2.1.2.2 Hand Application

Provide spray guns for hand application of paint in areas where the mobile paint applicator cannot be used.

2.1.2.2 Thermoplastic Application Equipment

2.1.2.2.1 Thermoplastic Material

Apply thermoplastic material with equipment that is capable of providing continuous uniformity in the dimensions and reflectorization of the marking.

2.1.2.2.2 Application Equipment

a. Provide application equipment capable of continuous mixing and agitation of the material, with conveying parts which prevent accumulation and clogging between the main material reservoir and the extrusion shoe or spray gun. All parts of the equipment which come into contact with the material must be easily accessible and exposed for cleaning and maintenance. All mixing and conveying parts up to and including the extrusion shoes and spray guns must maintain the material at the required temperature with heat-transfer oil or electrical-element-controlled heat.

b. Provide application equipment constructed to ensure continuous uniformity in the dimensions of the stripe. Provide an applicator with a means for cleanly cutting off stripe ends squarely and providing a method of applying "skiplines." Provide equipment capable of applying varying widths of traffic markings.

c. Provide mobile and maneuverable application equipment allowing straight lines to be followed and normal curves to be made in a true

arc. Provide equipment used for the placement of thermoplastic pavement markings of two general types: mobile applicator and portable applicator.

d. Equip the applicator with a pressurized or drop-on type bead dispenser capable of uniformly dispensing reflective glass spheres at controlled rates of flow. The bead dispenser must operate automatically to begin flow prior to the flow of binder to assure that the strip is fully reflectorized.

2.1.2.2.3 Mobile Application Equipment

Provide a truck-mounted, self-contained pavement marking machine that is capable of hot applying thermoplastic by either the extrusion or spray method.

a. Equip the unit to apply the thermoplastic marking material at temperatures according to the manufacturer's instructions, at widths varying from 3 to 12 inches, with an automatic pressurized or drop-on bead dispensing system, capable of operating continuously, and of installing a minimum of 20,000 lineal feet of longitudinal markings in an 8-hour day.

b. Equip the mobile unit with a melting kettle which holds a minimum of 6000 pounds of molten thermoplastic material; capable of heating the thermoplastic composition to temperatures as recommended by the manufacturer. Use a thermostatically controlled heat transfer liquid. Heating of the composition by direct flame is not allowed. Oil and material temperature gauges must be visible at both ends of the kettle.

c. Equip mobile units for application of extruded markings with a minimum of two extrusion shoes; located one on each side of the truck, capable of marking simultaneous edge line and centerline stripes; each being a closed, oil-jacketed unit; holding the molten thermoplastic at a temperature as recommended by the manufacturer; and capable of extruding a line of 3 to 8 inches in width; and at a thickness of not less than 0.120 inch nor more than 0.190 inch, of generally uniform cross section.

d. Equip mobile units for application of spray markings with a spray gun system capable of marking simultaneous edgeline and centerline stripes. Surround (jacket) the spray system with heating oil to maintain the molten thermoplastic at a temperature of 375 to 425 degrees F, capable of spraying a stripe of 3 to 12 inches in width, and in thicknesses varying from 0.060 inch to 0.098 inch, of generally uniform cross section.

e. Equip the mobile unit with an electronic programmable line pattern control system, capable of applying skip or solid lines in any sequence, through any and all of the extrusion shoes, or the spray guns, and in programmable cycle lengths. In addition, equip the mobile unit with an automatic counting mechanism capable of recording the number of lineal feet of thermoplastic markings applied to the pavement surface with an accuracy of 0.5 percent.

2.1.2.2.4 Portable Application Equipment

Provide portable hand-operated equipment, specifically designed for

placing special markings such as crosswalks, stop bars, legends, arrows, and short lengths of lane, edge and centerlines; and capable of applying thermoplastic pavement markings by the extrusion method. Equip the portable applicator with all the necessary components, including a materials storage reservoir, bead dispenser, extrusion shoe, and heating accessories, capable of holding the molten thermoplastic at the temperature recommended by the manufacturer, and of extruding a line of 3 to 12 inches in width, and in thickness of not less than 0.120 inch nor more than 0.190 inch and of generally uniform cross section.

2.1.2.3 Reflective Media Dispenser

Attach the dispenser for applying the reflective media to the paint dispenser and designed to operate automatically and simultaneously with the applicator through the same control mechanism. The bead applicator must be capable of adjustment and designed to provide uniform flow of reflective media over the full length and width of the stripe at the rate of coverage specified in paragraph APPLICATION.

2.1.2.4 Preformed Tape Application Equipment

Provide and use mechanical application equipment for the placement of preformed marking tape which is a mobile pavement marking machine specifically designed for use in applying pressure-sensitive pavement marking tape of varying widths. Equip the applicator with rollers, or other suitable compaction device to provide initial adhesion of the material with the pavement surface. Use additional tools and devices as needed to properly seat the applied material as recommended by the manufacturer.

2.2 MATERIALS

Use waterborne paint epoxy paint for roads. Use non-reflectorized waterborne paint for automotive parking areas. The maximum allowable VOC content of pavement markings is 150 grams per liter. Color of markings are indicated on the drawings and must conform to ASTM D6628 for roads and automotive parking areas and SAE AMS-STD-595A for airfields. Provide materials conforming to the requirements specified herein.

2.2.1 Waterborne Paint

MPI 97.

2.2.2 Solventborne Paint

MPI 32.

2.2.3 Methacrylate Paint

Formulate methacrylate paint to meet the requirements of FAA AC 150/5370-10, Item P-620.2, Methacrylate.

2.2.4 Epoxy Paint

2.2.4.1 Formulation

Epoxy pavement marking material will be a two component, 100 percent solids, material formulated to provide simple volumetric mixing ratio of two volumes of component A and one volume of component B unless otherwise

recommended by the manufacturer.

2.2.4.2 Composition

The component A of both white and yellow must be within the following limits:

TABLE I		
	White	Yellow
Pigments	Minimum 18 percent by weight Titanium Dioxide (ASTM D476, Type II)	21-27 percent by weight
Epoxy Resin	75-82 percent	73-79 percent

The epoxy resin must be free of lead, cadmium, mercury, hexavalent chromium and other toxic heavy metals as defined by the Environmental Protection Agency. Submit a manufacturer's certification of compliance with this requirement.

2.2.4.3 Epoxide Value

Determine epoxide epoxy number of the epoxy resin in accordance with ASTM D1652 for white and yellow component A on pigment free basis. The epoxide number must be within plus or minus 50 of the published manufacturer's standard.

2.2.4.4 Total Amine Value

Determine the amine number on the curing agent (component B) in accordance with ASTM D2074. The amine number must be within plus or minus 50 of the published manufacturer's standard.

2.2.4.5 Toxicity

Upon heating to application temperature, the material must not produce fumes which are toxic or injurious to persons or property.

2.2.4.6 Daylight Directional Reflectance

Directional reflectance of white and yellow paint (without glass beads) in accordance with ASTM E1347: White 84 percent Yellow 55 percent.

2.2.4.7 Laboratory Drying Time

The epoxy pavement marking material must have a maximum no-pick-up time of 30 minutes when tested in accordance with ASTM D711.

2.2.4.8 Curing

The epoxy material must be capable of fully curing under a constant surface temperature of 45 Degrees F or above.

2.2.4.9 Adhesion to Concrete

The catalyzed epoxy pavement marking material must have a high degree of adhesion to the specified concrete surface (100 percent concrete failure) when tested according to ASTM D7234. The concrete substrate must have a minimum compressive strength of 4,000 psi. Condition prepared specimens at a temperature of 75 plus or minus 2 Degrees F for a minimum of 24 hours and a maximum of 72 hours prior to performance of the test.

2.2.4.10 Hardness

Epoxy pavement marking materials must have a Shore D Hardness between 75 and 100 when tested in accordance with ASTM D2240. Cure the samples at 75 plus or minus 2 Degrees F for a minimum of 72 hours and a maximum of 96 hours prior to performing the tests.

2.2.4.11 Abrasion Resistance

The wear index for a catalyzed sample must not exceed 82 when tested in accordance with ASTM D4060 using a 1000 gram load, CS-17 wheels and a test duration of 1000 cycles. Run the test on cured samples of material which have been applied at a film thickness of 15 plus or minus 0.5 mils to code S-16 stainless steel plates. Cure the samples at 75 plus or minus 2 Degrees F for a minimum of 48 hours prior to performing the tests.

2.2.4.12 Tensile Strength

Epoxy pavement marking materials must have a tensile strength of at least 6,000 psi when tested in accordance with ASTM D638. Cast the Type IV specimens in a suitable mold and pull at the rate of 1/4 inch per minute using a suitable dynamic testing machine. Cure the samples at 75 plus or minus 2 Degrees F for a minimum of 12 hours and a maximum of 48 hours prior to performing the tests.

2.2.4.13 Compressive Strength

Catalyzed epoxy pavement marking materials must have a compressive strength of at least 12,000 psi when tested in accordance with ASTM D695. Condition the cast sample at 75 plus or minus 2 Degrees F for a minimum of 12 hours and a maximum of 48 hours prior to performing the tests. The rate of compression of these samples must not exceed 1/4 inch per minute.

2.2.5 Thermoplastic Compound

2.2.5.1 Composition Requirements

Thermoplastic compound must conform to AASHTO M 249. Formulate the binder component as an alkyd resin.

2.2.5.2 Primer

a. Asphalt concrete primer: Provide thermosetting adhesive primer with a solids content of pigment reinforced synthetic rubber and synthetic plastic resin dissolved or dispersed in a volatile organic solvent for asphaltic concrete pavements. The solids content must not be less than 10 percent by weight at 70 degrees F and 60 percent relative humidity. A wet film thickness of 0.005 inch, plus or minus 0.001 inch, must dry to a tack-free condition in less than 5 minutes.

b. Portland cement concrete primer: Provide an epoxy resin primer for Portland cement concrete pavements, of the type recommended by the

manufacturer of the thermoplastic composition.

2.2.6 High Build Acrylic Coating (HBAC)

Formulate High Build Acrylic Coating (HBAC) to meet the requirements of Table II.

TABLE II - REQUIREMENTS FOR HIGH BUILD ACRYLIC COATINGS (HBAC)	
TEST	MINIMUM REQUIREMENT (AND MAXIMUM WHERE INDICATED)
Resin System (ASTM D2621)	Waterborne 100 percent Acrylic
Percent Volume Solids (ASTM D2697)	58 percent
Volatile Organic Compound, max. (ASTM D3960)	1.25 lbs/gal
White (SAE AMS-STD-595A)	37925
Yellow (SAE AMS-STD-595A)	33538
Shore D Hardness (ASTM D2240)	45
1/8 inch Mandrel Bend at 5 mils Dry Film Thickness (DFT, one-week cure (ASTM D522/D522M, Method B)	No visual defects at bend (Conditions at ASTM D3924)
Adhesion to Concrete and Asphaltic Pavements (ASTM D4541)	140 psi or 100 percent cohesive failure in pavement
Accelerated Weathering, Yellow, 2500 Hours UV Exposure (ASTM G154: see note 1)	Max. color loss to 33655 (SAE AMS-STD-595A)
Water Absorption at 168 Hours Immersion Tap Water (ASTM D471)	9.0 percent max. weight increase (conditions at ASTM D3924)
Application at 65 mils Wet,One Coat, One-week Cure, (see note 2)	No visual cracking or curling (conditions at ASTM D3924)
No Pick-Up at 25 mils (ASTM D711)	Wet 10 minutes max.
Lead (ASTM D3335)	0.06 percent max.

TABLE II - REQUIREMENTS FOR HIGH BUILD ACRYLIC COATINGS (HBAC)	
TEST	MINIMUM REQUIREMENT (AND MAXIMUM WHERE INDICATED)
Cadmium (ASTM D3335)	0.06 percent max.
Chromium (ASTM D3718)	0.00 percent
Notes:	
(1) Properly mix and apply yellow paint at 10 mils plus or minus 2 mils DFT over a suitably sized, clean aluminum substrate (ASTM D823), and cure for a minimum of 48 hours: prepare four individual yellow samples. Expose three samples to continuous Ultraviolet (UV) light for 2500 hours, without cycles condensation, in accordance to ASTM G154: use UVA-340 lamps in the testing apparatus. Following exposure, compare the three exposed samples to the "one" non-exposed sample using SAE AMS-STD-595A colors 33538 and 33655 as visual references: evaluate exposed samples for degree of visual color loss. Yellow paint is rated as passing if each exposed sample appears equivalent to the non-exposed sample, and in addition, displays color loss no greater than SAE AMS-STD-595A color 33655.	
(2) Using double-stick, foam mounting tape (or equal) with a nominal thickness of 65 mils, apply a rectangular mold with inner dimensions of 3 in by 10 in to a clean aluminum sample approximately sized at 6 in by 12 in by 1/8 in. Do not remove the tape's plastic backing. Mix and apply excess paint into mold. Remove excess paint, by squeegee or other appropriate draw down technique, to a uniform thickness equal to the tape's height. Perform paint application and draw down within a period of no more than 60 seconds. Approximately one to two minutes following the draw down, remove tape from sample and allow coating to cure for a minimum period of one week ASTM D3924. Using a micrometer or other appropriate device, measure cured coating thickness (less sample thickness) to confirm resulting coating application was at or above 38 mils DFT. Inspect coating for visual signs of cracking and curling. Following a one week cure, the coating is rated as passing if applied greater than 38 mils DFT and visually free of both cracking and curling.	

2.2.7 Preformed Tape

Provide adherent reflectorized strip preformed tape in accordance with ASTM D4505 Retroreflectivity Level II, Class 1, 2 or 3, Skid Resistance Level B.

2.2.8 Reflective Media

2.2.8.1 Reflective Media for Roads

AASHTO M 247, Type 1.

PART 3 EXECUTION

3.1 EXAMINATION

3.1.1 Testing for Moisture

Test the pavement surface for moisture before beginning pavement marking after each period of rainfall, fog, high humidity, or cleaning, or when the ambient temperature has fallen below the dew point. Do not commence marking until the pavement is sufficiently dry and the pavement condition has been approved by the Contracting Officer or authorized representative.

Employ the "plastic wrap method" to test the pavement for moisture as follows: Cover the pavement with a 12 inch by 12 inch section of clear plastic wrap and seal the edges with tape. After 15 minutes, examine the plastic wrap for any visible moisture accumulation inside the plastic. Do not begin marking operations until the test can be performed with no visible moisture accumulation inside the plastic wrap. Re-test surfaces when work has been stopped due to rain.

3.1.2 Surface Preparation Demonstration

Prior to surface preparation, demonstrate the proposed procedures and equipment. Prepare areas large enough to determine cleanliness and rate of cleaning. Perform a demonstration removal of pavement marking in an area designated by the Contracting Officer.

3.1.3 Test Stripe Demonstration

Prior to paint application, demonstrate test stripe application within the work area using the proposed materials and equipment. Apply separate test stripes in each of the line widths and configurations required herein using the proposed equipment. Make the test stripes long enough to determine the proper speed and operating pressures for the vehicle(s) and machinery, but not less than 50 feet long.

3.1.4 Application Rate Demonstration

During the Test Stripe Demonstration, demonstrate compliance with the application rates specified herein. Document the equipment speed and operating pressures required to meet the specified rates in each configuration of the equipment and provide a copy of the documentation to the Contracting Officer prior to proceeding with the work.

3.1.5 Retroreflective Value Demonstration

After the test stripes have cured to a "no-track" condition, demonstrate compliance with the average retroreflective values specified herein. Take a minimum of ten readings on each test stripe with a Retroreflectometer with a direct readout in millicandelas per square meter per lux (mcd/m2/lx). Perform testing in accordance with ASTM D4061, ASTM E1710, ASTM E2177, and ASTM E2302.

3.1.6 Level of Performance Demonstration

The Contracting Officer will be present at the application demonstrations to observe the results obtained and to validate the operating parameters of the vehicle(s) and equipment. If accepted by the Contracting Officer, the test stripe is the measure of performance required for this project.

Do not proceed with the work until the demonstration results are satisfactory to the Contracting Officer.

3.2 EXTERIOR SURFACE PREPARATION

Allow new pavement surfaces to cure for a period of not less than 30 days before application of marking materials. Thoroughly clean surfaces to be marked before application of the paint. Remove dust, dirt, and other granular surface deposits by sweeping, blowing with compressed air, rinsing with water, or a combination of these methods as required. Remove rubber deposits, existing paint markings, residual curing compounds, and other coatings adhering to the pavement by water blastingapproved chemical removal method.

a. For Portland Cement Concrete pavement, grinding, light shot blasting, or light scarification, to a resulting profile equal to ICRI 03732 CSP 2, CSP 3, and CSP 4, respectively, can be used in addition to water blasting on most pavements, to either remove existing coatings, or for surface preparation.

b. Do not use shot blasting on airfield pavements due to the potential of Foreign Object Damage (FOD) to aircraft. Scrub affected areas, where oil or grease is present on old pavements to be marked, with several applications of trisodium phosphate solution or other approved detergent or degreaser and rinse thoroughly after each application. After cleaning oil-soaked areas, seal with shellac or primer recommended by the manufacturer to prevent bleeding through the new paint. Do not commence painting in any area until pavement surfaces are dry and clean.

3.2.1 Early Painting of Rigid Pavements

Pretreat rigid pavements that require early painting with an aqueous solution containing 3 percent phosphoric acid and 2 percent zinc chloride. Apply the solution to the areas to be marked.

3.2.2 Early Painting of Asphalt Pavements

For asphalt pavement systems requiring painting application at less than 30 days, apply the paint and beads at half the normal application rate, followed by a second application at the normal rate after 30 days.

3.3 APPLICATION

Apply pavement markings to dry pavements only.

3.3.1 Paint

Apply paint with approved equipment at rate of coverage specified herein. Provide guidelines and templates as necessary to control paint application. Take special precautions in marking numbers, letters, and symbols. Manually paint numbers, letters, and symbols. Sharply outline all edges of markings. The maximum drying time requirements of the paint specifications will be strictly enforced, to prevent undue softening of bitumen, and pickup, displacement, or discoloration by tires of traffic. If there is a deficiency in drying of the markings, painting operations must cease until the cause of the slow drying is determined and corrected.

3.3.1.1 Waterborne Paint

3.3.1.1.1 Roads

Apply paint at a rate of 105 plus or minus 5 square feet per gallon. Apply AASHTO M 247 Type 1 beads at a rate of 7 plus or minus 0.5 pounds of glass spheres per gallon.

3.3.1.2 Solventborne Paint

Apply paint at a minimum wet film thickness of 15 mils. Apply AASHTO M 247 Type 1 beads at a minimum rate of 6 pounds of glass spheres per gallon.

3.3.1.3 Methacrylate Paint

Apply paint evenly to the pavement surface at a maximum rate of 45 square feet per gallon. Apply glass spheres conforming to FS TT-B-1325 uniformly to the wet paint on airfield pavement. Use either Type I (Gradation A), Type III, or Type IV (Gradation A or B) beads. Apply Type I (Gradation A) beads at a minimum rate of 15 pounds of glass spheres per gallon. Apply Type III beads at a minimum rate of 20 pounds of glass spheres per gallon. Apply Type IV (Gradation A or B) beads at a minimum rate of 16 pounds of glass spheres per gallon.

3.3.1.4 Epoxy Paint

Apply paint evenly to the pavement surface at a wet film thickness of 20 mils plus or minus 1 mil to cover 80 plus or minus 4 square feet per gallon. Apply glass spheres uniformly to the wet paint on road and street pavement at a rate of 7 plus or minus 0.5 pounds of glass spheres per gallon.

3.3.1.5 High Build Acrylic Coating

Apply High Build Acrylic Coating (HBAC) at a rate of 50 square feet per gallon. Apply Type IV (Gradation A) beads at a minimum rate of 16 pounds of glass spheres per gallon.

3.3.2 Thermoplastic Compound

Place thermoplastic pavement markings, free from dirt or tint, upon dry pavement. The temperature must be a minimum of 40 degrees F and rising at the time of installation. Apply all centerline, skipline, edgeline, and other longitudinal type markings with a mobile applicator. Place all special markings, crosswalks, stop bars, legends, arrows, and similar patterns with a portable applicator, using the extrusion method.

3.3.2.1 Primer

After surface preparation has been completed, prime the asphalt or concrete pavement surface with spray equipment. Allow primer materials to "set-up" prior to applying the thermoplastic composition. Allow the asphalt concrete primer to dry to a tack-free condition, usually occurring in less than 10 minutes. Allow the Portland cement concrete primer to dry in accordance with the thermoplastic manufacturer recommendations. To shorten the curing time of the epoxy resins, an infrared heating device may be used on the concrete primer.

After the primer has "set-up", apply the thermoplastic at temperatures no

lower than 375 degrees F nor higher than 425 degrees F at the point of deposition. Apply all extruded thermoplastic markings at the specified width and at a thickness of not less than 0.125 inch nor more than 0.190 inch. Apply all sprayed thermoplastic markings at the specified width and the thickness designated in the contract plans. If the plans do not specify a thickness, apply centerline markings at a wet thickness of 0.090 inch, plus or minus 0.005 inch, and edgeline markings at a wet thickness of 0.060 inch, plus or minus 0.005 inch.

3.3.2.2 Reflective Media

Immediately after installation of the thermoplastic material, mechanically apply drop-on reflective glass spheres conforming to AASHTO M 247 Type 1 at the rate of one pound per 20 square feet such that the spheres are held by and imbedded in the surface of the molten material. Accomplish drop-on application of the glass spheres to ensure even distribution at the specified rate of coverage. If there is a malfunction of either thermoplastic applicator or reflective media dispenser, discontinue operations until deficiency is corrected.

3.3.3 Raised Pavement Markers

Align prefabricated markers carefully at the spacing indicated on the drawings and permanently fix in place by means of epoxy adhesives. To ensure good bond prior to applying adhesive, thoroughly clean all areas where markers are to be set by water blasting and use of compressed air.

3.3.4 Preformed Tape

The pavement surface and ambient air temperature must be a minimum of 60 degrees F and rising. Place the preformed markings in accordance with the manufacturer's written instructions.

3.3.5 Cleanup and Waste Disposal

Keep the worksite clean and free of debris and waste from the removal and application operations. Dispose of debris at approved sites.

3.4 FIELD QUALITY CONTROL

3.4.1 Sampling and Testing

As soon as the paint materials and reflective media are available for sampling, obtain by random selection from the sealed containers, two quart samples of each batch in the presence of the Contracting Officer. Accomplish adequate mixing prior to sampling to ensure a uniform, representative sample. A batch is defined as that quantity of material processed by the manufacturer at one time and identified by number on the label. Clearly identify samples by designated name, specification number, batch number, project contract number, intended use, and quantity involved.

3.4.2 Material Inspection

Examine material at the job site to determine that it is the material referenced in the report of test results or certificate of compliance.

Provide test results substantiating conformance to the specified requirements with each certificate of compliance.

3.4.3 Dimensional Tolerances

Apply all markings in the standard dimensions provide in the drawings. New markings may deviate a maximum of 10 percent larger than the standard dimension. The maximum deviation allowed when painting over an old marking is up to 20 percent larger than the standard dimensions.

3.4.4 Bond Failure Verification

Inspect newly applied markings for signs of bond failure based on visual inspection and comparison to results from Test Stripe Demonstration paragraph.

3.4.5 Reflective Media and Coating Application Verification

Use a wet film thickness gauge to measure the application of wet paint. Use a microscope or magnifying glass to evaluate the embedment of glass beads in the paint. Verify the glass bead embedment with approximately 50 percent of the individual bead spheres embedded and 50 percent of the individual bead spheres exposed.

3.4.6 Retroreflective Markings

Collect and record readings for white and yellow retroreflective markings at the rate of one reading per 1000 linear feet. The minimum acceptable average for white markings is 200 millicandelas per square meter per lux (mcd/m2/lx) (measured with Retroreflectometer). The minimum acceptable average for yellow markings is 175 millicandelas per square meter per lux (mcd/m2/lx). Compute readings by averaging a minimum of 10 readings taken within the area at random locations. Re-mark areas not meeting the retroreflective requirements stated above.

3.4.7 Material Bond Verification and Operations Area Cleanup for Airfields

Vacuum sweep the aircraft operating area before it is opened for aircraft operations to preclude potential foreign object damaged to aircraft engines. Visually inspect the pavement markings and the material captured by the vacuum. Verify that no significant loss of reflective media has occurred to the pavement marking due to the vacuum cleaning.

-- End of Section --

THIS PAGE HAS BEEN INTENTIONALLY LEFT BLANK

SECTION 32 31 13.53

HIGH-SECURITY CHAIN LINK FENCES AND GATES
04/08

PART 1 GENERAL

1.1 REFERENCES

The publications listed below form a part of this specification to the extent referenced. The publications are referred to within the text by the basic designation only.

ASTM INTERNATIONAL (ASTM)

ASTM A116	(2011) Standard Specification for Metallic-Coated, Steel Woven Wire Fence Fabric
ASTM A121	(2013) Standard Specification for Metallic-Coated Carbon Steel Barbed Wire
ASTM A153/A153M	(2016) Standard Specification for Zinc Coating (Hot-Dip) on Iron and Steel Hardware
ASTM A240/A240M	(2016) Standard Specification for Chromium and Chromium-Nickel Stainless Steel Plate, Sheet, and Strip for Pressure Vessels and for General Applications
ASTM A392	(2011a) Standard Specification for Zinc-Coated Steel Chain-Link Fence Fabric
ASTM A478	(1997; R 2013) Standard Specification for Chromium-Nickel Stainless Steel Weaving and Knitting Wire
ASTM A780/A780M	(2009; R 2015) Standard Practice for Repair of Damaged and Uncoated Areas of Hot-Dip Galvanized Coatings
ASTM A824	(2001; R 2012) Standard Specification for Metallic-Coated Steel Marcelled Tension Wire for Use With Chain Link Fence
ASTM C94/C94M	(2016a) Standard Specification for Ready-Mixed Concrete
ASTM F1043	(2016a) Standard Specification for Strength and Protective Coatings on Steel Industrial Fence Framework
ASTM F1083	(2016) Standard Specification for Pipe, Steel, Hot-Dipped Zinc Coated (Galvanized) Welded, for Fence Structures

ASTM F1184	(2016) Industrial and Commercial Horizontal Slide Gates
ASTM F567	(2014a) Standard Practice for Installation of Chain Link Fence
ASTM F626	(2014) Standard Specification for Fence Fittings
ASTM F883	(2013) Padlocks
ASTM F900	(2011) Industrial and Commercial Swing Gates

U.S. GENERAL SERVICES ADMINISTRATION (GSA)

FS RR-F-191	(Rev K) Fencing, Wire and Post Metal (and Gates, Chain-Link Fence Fabric, and Accessories)
FS RR-F-191/1	(Rev F) Fencing, Wire and Post, Metal (Chain-Link Fence Fabric)
FS RR-F-191/2	(Rev E) Fencing, Wire and Post, Metal (Chain-Link Fence Gates)
FS RR-F-191/3	(Rev E; Am 1) Fencing, Wire and Post, Metal (Chain-Link Fence Posts, Top Rails and Braces)
FS RR-F-191/4	(Rev F) Fencing, Wire and Post, Metal (Chain-Link Fence Accessories)

1.2 SUBMITTALS

Government approval is required for submittals with a "G" designation; submittals not having a "G" designation are for Contractor Quality Control approval. Submittals with an "S" are for inclusion in the Sustainability Notebook, in conformance to Section 01 33 29 SUSTAINABILITY REPORTING. Submit the following in accordance with Section 01 33 00 SUBMITTAL PROCEDURES:

SD-02 Shop Drawings

Fence Installation
Installation Drawings
Location of gate, corner, end, and pull posts
Gate Assembly
Turnstiles
Gate Hardware and Accessories

SD-03 Product Data

Fence Installation
Gate Assembly
Gate Hardware and Accessories

SD-04 Samples

Fabric
Posts
Post Caps
Braces

Top Rail

Tension Wire
Barbed Wire
Barbed Wire Supporting Arms
Barbed Tape
Stretcher Bars
Gate Posts
Gate Hardware and Accessories
Turnstiles
Padlocks
Wire Ties

SD-06 Test Reports

zinc coating
PVC coating
Aluminum Alloy Coating

SD-07 Certificates

Chain Link Fence
Reports
Zinc Coating
PVC coating
aluminum alloy coating
Fabric
Barbed Wire
Stretcher Bars
Gate Hardware and Accessories
Concrete
Gate Operator

SD-08 Manufacturer's Instructions

Fence Installation
Gate Assembly
Hardware Assembly
Accessories

SD-10 Operation and Maintenance Data

Electro-Mechanical Locks
Gate Operator
operating and maintenance instructions

1.3 QUALITY ASSURANCE

1.3.1 Required Report Data

Submit reports, signed by an official authorized to certify on behalf of the manufacturer, of chain-link fencing listing and accessories regarding weight in ounces for zinc coating, thickness of PVC coating, and chemical composition and thickness of aluminum alloy coating. Submit reports

demonstrating full compliance with the following standards: FS RR-F-191, FS RR-F-191/1, FS RR-F-191/2, FS RR-F-191/3, and FS RR-F-191/4

1.3.2 Assembly and Installation Drawings

Submit Manufacturer's instructions and complete Fence Installation Drawings for review and approval by the Contracting Officer prior to shipment. Drawing details shall include, but are not limited to: Fence Installation, Location of gate, corner, end, and pull posts, Gate Assembly, Turnstiles, and Gate Hardware and Accessories.

1.4 DELIVERY, STORAGE, AND HANDLING

Deliver materials to site in an undamaged condition. Store materials off the ground to provide protection against oxidation caused by ground contact.

PART 2 PRODUCTS

2.1 FENCE FABRIC

2.1.1 General

Provide ASTM A392, Class 1 , zinc-coated steel wire with minimum coating weight of 1.2 ounces of zinc per square foot of coated surface, Fabricate fence fabric of 9 gauge wire woven in 2 inch mesh conforming to ASTM A116. Set fabric height at 7 feet. Fabric shall be twisted and barbed on the top selvage and knuckled on the bottom selvage. Secure fabric to posts using stretcher bars or ties spaced 15 inches on center, or by integrally weaving to integral fastening loops of end, corner, pull, and gate posts for full length of each post. Install fabric on opposite side of posts from area being secured.

2.2 POSTS

2.2.1 Metal Posts for Chain Link Fence

FS RR-F-191/3 line posts; Class 1, steel pipe, Grade A or . End, corner, and pull posts; Class 1, steel pipe, Grade A, , .

2.2.2 Accessories

a. Provide accessories conforming to ASTM F626. Ferrous accessories shall be zinc or aluminum coated.

b. Furnish truss rods for each terminal post. Provide truss rods with turnbuckles or other equivalent provisions for adjustment.

c. Provide Barbed wire supporting arms of the 45 degree outward angle 3-strand arm type and of the design required for the post furnished. Secure arms by riveting.

d. Furnish post caps in accordance with manufacturer's standard accessories.

e. Provide 9 gauge steel tie wire for attaching fabric to rails, braces, and posts and match the coating of the fence fabric. Tie wires for attaching fabric to tension wire on high security fences shall be 16 gage stainless steel. Provide double loop tie wires 6.5

inches in length. Miscellaneous hardware coatings shall conform to ASTM A153/A153M unless modified.

2.3 BRACES AND RAILS

Braces , top rail; Class 1, steel pipe, Grade A or , in .

2.4 WIRE

2.4.1 Wire Ties

Submit samples as specified. FS RR-F-191/4. Provide wire ties constructed of the same material as the fencing fabric.

2.4.2 Barbed Wire

Provide barbed wire conforming to ASTM A121 zinc-coated, Type Z, Class 3, or aluminum-coated, Type A, with 12.5 gauge wire with 14 gauge, round, 4-point barbs spaced no more than 5 inches apart.

2.4.3 Tension Wire

Provide Type I or Type II tension wire, Class 4 coating, in accordance with ASTM A824.

2.5 BARBED TAPE

Provide reinforced barbed tape, double coil , for fence toppings fabricated from 430 series stainless steel with a hardness range of Rockwell (30N) 37-45 conforming to the requirements of ASTM A240/A240M. Provide stainless steel strip 0.025 inch thick by 1 inch wide before fabrication. Each barb shall be a minimum of 1.2 inch in length, in groups of 4, spaced on 4 inch centers. The stainless steel core wire shall have a 0.098 inch diameter with a minimum tensile strength of 140 psi and be in accordance with ASTM A478. Reinforced barbed tape, single coil, for ground application shall meet the above requirements. Use sixteen gauge stainless steel twistable wire ties for attaching the barbed tape to the barbed wire and to the fence for ground application.

2.6 CONCRETE

ASTM C94/C94M, using 3/4 inch maximum size aggregate, and having minimum compressive strength of 3000 psi at 28 days. Grout shall consist of one part portland cement to three parts clean, well-graded sand and the minimum amount of water to produce a workable mix.

2.7 GATES

2.7.1 Gate Assembly

Provide gate assembly conforming to ASTM F900 and/or ASTM F1184 of the type and swing shown. Provide gate frames conforming to strength and coating requirements of ASTM F1083 for Group IA, steel pipe, with external coating Type A, nominal pipe size (NPS) 1-1/2. Provide gate frames conforming to strength and coating requirements of ASTM F1043, for Group IC, steel pipe with external coating Type A or Type B, nominal pipe size (NPS) 1-1/2. Gate fabric shall be as specified for chain link fabric.

2.7.2 Gate Leaves

For gate leaves, more than 8 feet wide, provide either intermediate members and diagonal truss rods or tubular members as necessary to provide rigid construction, free from sag or twist. Gate leaves less than 8 feet wide shall have truss rods or intermediate braces. Provide intermediate braces on all gate frames with an electro-mechanical lock. Attach fabric to the gate frame by method standard with the manufacturer except that welding will not be permitted.

2.7.3 Gate Hardware and Accessories

Submit manufacturer's catalog data. Furnish and install latches, hinges, stops, keepers, rollers, and other hardware items as required for the operation of the gate. Arrange latches for padlocking so that the padlock will be accessible from both sides of the gate. Provide stops for holding the gates in the open position. For high security applications, each end member of gate frames shall be extended sufficiently above the top member to carry three strands of barbed wire in horizontal alignment with barbed wire strands on the fence.

2.8 Turnstiles

Provide galvanized steel , three wing turnstile consisting of a rotor, cage, ceiling plate, and bottom bearing plate. Provide electronic opening and closing by card key . Provide continuous turn motion.

2.9 PADLOCKS

Provide padlocks conforming to ASTM F883, Type PO1 , Option A, B, and G , Grade 6 . Size 1-3/4 inch. Key all padlocks alike. Key all padlocks into master key system as specified in Section 08 71 00 DOOR HARDWARE.

2.10 GATE OPERATOR

Provide electric gate operators for sliding gates as follows: Electrical gate operators shall have a right angle gearhead instantly reversing motor with magnetic drum-type brake, friction disc clutch, reversing starter with thermal overload protection, and a chain-driven geared rotary-type automatic limit switch. Gears shall consist of a hardened steel machine cut worm and mating bronze gear. All gears and bearings shall operate in a bath of oil. Gate operators with V-belt pulleys are not allowed. Equip gate operators with an emergency release to allow the gate to be operated manually. The emergency release mechanism shall be capable of being locked in the engaged or disengaged position. Provide positive stops on the gate tracks as a backup to the limit switches.

2.11 ELECTRO-MECHANICAL LOCKS

Electro-mechanical locking devices for sliding gates and personnel gates shall be solenoid actuated such that the deadbolt retracts when the solenoid is energized and remains electrically retracted until the gate is closed. Provide continuous duty type solenoid, rated for 120V ac, 60Hz operation. The locking device shall be unlockable by key and keyed on both sides. Status of the electro-mechanical lock shall be monitored by two limit switches (integral to the locking device) wired in series. One switch shall monitor the deadlock lever and the other monitor the locking tongue.

PART 3 EXECUTION

3.1 FENCE INSTALLATION

Perform complete installation conforming to ASTM F567.

3.1.1 Line and Grade

Install fence to the lines and grades indicated. Clear the area on either side of the fence line to the extent indicated. Space line posts equidistant at intervals not exceeding 10 feet. Terminal (corner, gate, and pull) posts shall be set at abrupt changes in vertical and horizontal alignment. Provide fabric continuous between terminal posts; however, runs between terminal posts shall not exceed 500 feet. Repair any damage to galvanized surfaces, including welding, with paint containing zinc dust in accordance with ASTM A780/A780M.

3.1.2 Excavation

Clear all post holes of loose material. Spread waste material where directed. Eliminate ground surface irregularities along the fence line to the extent necessary to maintain a 1 inch clearance between the bottom of the fabric and finish grade.

3.2 POST INSTALLATION

3.2.1 Earth and Bedrock

a. Set posts plumb and in alignment. Except where solid rock is encountered, set posts in concrete to the depth indicated on the drawings. Where solid rock is encountered with no overburden, set posts to a minimum depth of 18 inches in rock. Where solid rock is covered with an overburden of soil or loose rock, set posts to the minimum depth indicated on the drawing unless a penetration of 18 inches in solid rock is achieved before reaching the indicated depth, in which case terminate depth of penetration. Grout all portions of posts set in rock.

b. Portions of posts not set in rock shall be set in concrete from the rock to ground level. Posts set in concrete shall be set in holes not less than the diameter shown on the drawings. Make diameters of holes in solid rock at least 1 inch greater than the largest cross section of the post. Thoroughly consolidate concrete and grout around each post, free of voids and finished to form a dome. Allow concrete and grout to cure for 72 hours prior to attachment of any item to the posts. Group II line posts may be mechanically driven, for temporary fence construction only, if rock is not encountered. Set driven posts to a minimum depth of 3 feet and protect with drive caps when setting.

c. Test fence post rigidity by applying a 50 pound force on the post, perpendicular to the fabric, at 5 feet above ground. Post movement measured at the point where the force is applied shall be less than or equal to 3/4 inch from the relaxed position. Test every tenth post for rigidity. When a post fails this test, make further tests on the next four posts on either side of the failed post. All failed posts shall be removed, replaced, and retested at the Contractor's expense.

3.3 RAILS

Bolt bottom rail to double rail ends and securely fasten double rail ends

to the posts. Peen bolts to prevent easy removal. Install bottom rail before chain link fabric.

3.4 FABRIC INSTALLATION

a. Install chain link fabric on the side of the post indicated. Attach fabric to terminal posts with stretcher bars and tension bands. Space bands at approximately 15 inch intervals. Install fabric and pull taut to provide a smooth and uniform appearance free from sag, without permanently distorting the fabric diamond or reducing the fabric height. Fasten fabric to line posts at approximately 15 inch intervals and fastened to all rails and tension wires at approximately 12 inch intervals.

b. Cut fabric by untwisting and removing pickets. Accomplish splicing by weaving a single picket into the ends of the rolls to be joined. The bottom of the installed fabric shall be 1 plus or minus 1/2 inch above the ground.

c. After the fabric installation is complete, exercise the fabric by applying a 50 pound push-pull force at the center of the fabric between posts; the use of a 30 pound pull at the center of the panel shall cause fabric deflection of not more than 2.5 inches when pulling fabric from the post side of the fence; every second fence panel shall meet this requirement; resecure and retest all failed panels at the Contractor's expense.

3.5 SUPPORTING ARMS

Install barbed wire supporting arms and barbed wire as indicated on the drawings and as recommended by the manufacturer. Anchor supporting arms with 3/8 inch diameter plain pin rivets or, at the Contractor's option, with studs driven by low-velocity explosive-actuated tools for steel, wrought iron, ductile iron, or malleable iron. Studs driven by an explosive-actuated tool shall not be used with gray iron or other material that can be fractured. Use a minimum of two studs per support arm. Pull barbed wire taut and attach to the arms with clips or other means that will prevent easy removal.

3.6 GATE INSTALLATION

a. Install gates at the locations shown. Mount gates to swing as indicated. Install latches, stops, and keepers as required. Install Slide gates as recommended by the manufacturer.

b. Attach padlocks to gates or gate posts with chains. Weld or otherwise secure hinge pins, and hardware assembly to prevent removal.

c. Submit 6 copies of operating and maintenance instructions, a minimum of 2 weeks prior to field training. Operating instructions shall outline the step-by-step procedures required for system startup, operation, and shutdown. Include the manufacturer's name, model number, service manual, parts list, and brief description of all equipment and their basic operating features. Include in the maintenance instructions routine maintenance procedures, possible breakdowns and repairs, and troubleshooting guide. Also include the general gate layout, equipment layout and simplified wiring and control diagrams of the system as installed.

3.7 GROUNDING

a. Ground fencing as indicated on drawings.

b. Ground fences crossed by overhead powerlines in excess of 600 volts. Electrical equipment attached to the fence shall be grounded.

c.

d. Provide ground conductor consisting of No. 8 AWG solid copper wire. Grounding electrodes shall be 3/4 inch by 10 foot long copper-clad steel rod. Drive electrodes into the earth so that the top of the electrode is at least 6 inches below the grade. Where driving is impracticable, electrodes shall be buried a minimum of 12 inches deep and radially from the fence. The top of the electrode shall not be less than 2 feet or more than 8 feet from the fence. Clamp ground conductor to the fence and electrodes with bronze grounding clamps to create electrical continuity between fence posts, fence fabric, and ground rods. Total resistance of the fence to ground shall not be greater than 25 ohms.

3.8 SECURITY

Install new security fencing, remove existing security fencing, and perform related work to provide continuous security for facility. Schedule and fully coordinate work with Contracting Officer and cognizant Security Officer.

3.9 CLEANUP

Remove waste fencing materials and other debris from the work site each workday.

-- End of Section --

THIS PAGE HAS BEEN INTENTIONALLY LEFT BLANK

SECTION 32 92 23

SODDING
04/06

PART 1 GENERAL

1.1 REFERENCES

The publications listed below form a part of this specification to the extent referenced. The publications are referred to within the text by the basic designation only.

ASTM INTERNATIONAL (ASTM)

ASTM D4972	(2018) Standard Test Methods for pH of Soils

TURFGRASS PRODUCERS INTERNATIONAL (TPI)

TPI GSS	(1995) Guideline Specifications to Turfgrass Sodding

U.S. DEPARTMENT OF AGRICULTURE (USDA)

DOA SSIR 42	(1996) Soil Survey Investigation Report No. 42, Soil Survey Laboratory Methods Manual, Version 3.0

1.2 DEFINITIONS

1.2.1 Stand of Turf

100 percent ground cover of the established species.

1.3 RELATED REQUIREMENTS

Section 31 00 00 EARTHWORK,, Section 32 92 19 SEEDING, Section 32 93 00 EXTERIOR PLANTS, and Section 32 05 33 LANDSCAPE ESTABLISHMENT applies to this section for pesticide use and plant establishment requirements, with additions and modifications herein.

1.4 SUBMITTALS

Government approval is required for submittals with a "G" designation; submittals not having a "G" designation are for Contractor Quality Control approval.. When used, a designation "LA" following the "G" designation identifies the Government Landscape Architect will review the submittal for the Government. Submittals with an "S" are for inclusion in the Sustainability eNotebook, in conformance to Section 01 33 29 SUSTAINABILITY REPORTING. Submit the following in accordance with Section 01 33 00 SUBMITTAL PROCEDURES:

SD-03 Product Data

Fertilizer

Include physical characteristics, and recommendations.

SD-06 Test Reports

Topsoil composition tests (reports and recommendations).

SD-07 Certificates

Sod farm certification for sods. Indicate sand-based sod and type of sod in accordance with TPI GSS.

1.5 DELIVERY, STORAGE, AND HANDLING

1.5.1 Delivery

1.5.1.1 Sod Protection

Protect from drying out and from contamination during delivery, on-site storage, and handling.

1.5.1.2 Fertilizer and Lime Delivery

Deliver to the site in original, unopened containers bearing manufacturer's chemical analysis, name, trade name, trademark, and indication of conformance to state and federal laws. Instead of containers, fertilizer and lime may be furnished in bulk with certificate indicating the above information.

1.5.2 Storage

1.5.2.1 Sod Storage

Lightly sprinkle with water, cover with moist burlap, straw, or other approved covering; and protect from exposure to wind and direct sunlight until planted. Provide covering that will allow air to circulate so that internal heat will not develop. Do not store sod longer than 24 hours. Do not store directly on concrete or bituminous surfaces.

1.5.2.2 Topsoil

Prior to stockpiling topsoil, treat growing vegetation with application of appropriate specified non-selective herbicide. Clear and grub existing vegetation three to four weeks prior to stockpiling topsoil.

1.5.2.3 Handling

Do not drop or dump materials from vehicles.

1.6 TIME RESTRICTIONS AND PLANTING CONDITIONS

1.6.1 Restrictions

Do not plant when the ground is muddy, or when air temperature exceeds 90 degrees Fahrenheit.

1.7 TIME LIMITATIONS

1.7.1 Sod

Place sod a maximum of thirty six hours after initial harvesting, in

accordance with TPI GSS as modified herein.

PART 2 PRODUCTS

2.1 SODS

2.1.1 Classification

Nursery grown, sand-based sod certified as classified in the TPI GSS. Machine cut sod at a uniform thickness of 3/4 inch within a tolerance of 1/4 inch, excluding top growth and thatch. Each individual sod piece shall be strong enough to support its own weight when lifted by the ends. Broken pads, irregularly shaped pieces, and torn or uneven ends will be rejected.Wood pegs and wire staples for anchorage shall be as recommended by sod supplier.

2.1.2 Purity

Sod species shall be genetically pure, free of weeds, pests, and disease.

2.1.3 Planting Dates

Lay sod from March 1 to June 1 for warm season spring planting and from September 1 to November 31 for cool season fall planting.

2.1.4 Composition

2.1.4.1 Proportion

Proportion grass species as follows.

Botanical Name	Common Name	Percent
Cynodon dactylon	___Bermudagrass __	100%

2.1.4.2 Sod Farm Overseeding

At the sod farm provide sod with overseeding of annual rye grass seed.

2.2 TOPSOIL

2.2.1 On-Site Topsoil

Surface soil stripped and stockpiled on site and modified as necessary to meet the requirements specified for topsoil in paragraph entitled "Composition." When available topsoil shall be existing surface soil stripped and stockpiled on-site in accordance with Section 31 00 00 EARTHWORK and 31 23 00.00 20 EXCAVATION AND FILL.

2.2.2 Off-Site Topsoil

Conform to requirements specified in paragraph entitled "Composition." Additional topsoil shall be furnished by the Contractor.

2.2.3 Composition

Containing from 5 to 10 percent organic matter as determined by the topsoil composition tests of the Organic Carbon, 6A, Chemical Analysis Method described in DOA SSIR 42. Maximum particle size, 3/4 inch, with maximum 3 percent retained on 1/4 inch screen. The pH shall be tested in accordance with ASTM D4972. Topsoil shall be free of sticks, stones, roots, and other debris and objectionable materials. Other components shall conform to the following limits:

Silt	7 to 17
Clay	4 to 12 percent
Sand	70 to 82percent
pH	5.8 to 7.0

2.3 SOIL CONDITIONERS

Add conditioners to topsoil as required to bring into compliance with "composition" standard for topsoil as specified herein.

2.3.1 Lime

Agricultural grade, chelated calcium limestone containing polyhydroxycarboxylic acid.

2.3.2 Sand

Clean and free of materials harmful to plants.

2.3.3 Composted Derivatives

Ground bark, nitrolized sawdust, humus or other green wood waste material free of stones, sticks, and soil stabilized with nitrogen and having the following properties:

2.3.3.1 Particle Size

Minimum percent by weight passing:

No. 4 mesh screen	95
No. 8 mesh screen	80

2.3.3.2 Nitrogen Content

Minimum percent based on dry weight:

Fir Sawdust	0.7
Fir or Pine Bark	1.0

2.4 FERTILIZER

2.4.1 Granular Fertilizer

Organic granular controlled release fertilizer containing the following minimum percentages, by weight, of plant food nutrients:

10 percent available nitrogen
5 percent available phosphorus
5 percent available potassium

2.5 WATER

Source of water shall be approved by Contracting Officer and of suitable quality for irrigation containing no element toxic to plant life.

PART 3 EXECUTION

3.1 PREPARATION

3.1.1 Extent Of Work

Provide soil preparation (including soil conditioners), organic fertilizing, and sodding of all newly graded finished earth surfaces, unless indicated otherwise, and at all areas inside or outside the limits of construction that are disturbed by the Contractor's operations.

3.1.2 Soil Preparation

Provide 4 inches of off-site topsoil to meet indicated finish grade. After areas have been brought to indicated finish grade, incorporate pH adjusters into soil a minimum depth of 4 inches by disking, harrowing, tilling or other method approved by the Contracting Officer. Remove debris and stones larger than 3/4 inch in any dimension remaining on the surface after finish grading. Correct irregularities in finish surfaces to eliminate depressions. Protect finished topsoil areas from damage by vehicular or pedestrian traffic.

3.1.2.1 Soil Conditioner Application Rates

Apply soil conditioners at rates as determined by laboratory soil analysis of the soils at the job site. For bidding purposes only apply at rates for the following:

Lime 5 pounds per 1000 square feet.

3.1.2.2 Fertilizer Application Rates

Apply fertilizer at rates as determined by laboratory soil analysis of the soils at the job site. For bidding purposes only apply at rates for the following:

Granular Fertilizer 20 pounds per 1000 square feet.

]3.2 SODDING

3.2.1 Finished Grade and Topsoil

Prior to the commencement of the sodding operation, the Contractor shall verify that finished grades are as indicated on drawings; the placing of topsoil, smooth grading, and compaction requirements have been completed in accordance with Section 31 23 00.00 20 EXCAVATION AND FILL.

The prepared surface shall be a maximum 1 inch below the adjoining grade of any surfaced area. New surfaces shall be blended to existing areas. The prepared surface shall be completed with a light raking to remove from the surface debris and stones over a minimum 5/8 inch in any dimension.

3.2.2 Placing

Place sod a maximum of 36 hours after initial harvesting, in accordance with TPI GSS as modified herein.

3.2.3 Sodding Slopes and Ditches

For slopes 2:1 and greater, lay sod with long edge perpendicular to the contour. For V-ditches and flat bottomed ditches, lay sod with long edge perpendicular to flow of water. Anchor each piece of sod with wood pegs or wire staples maximum 2 feet on center.On slope areas, start sodding at bottom of the slope.

3.2.4 Finishing

After completing sodding, blend edges of sodded area smoothly into surrounding area. Air pockets shall be eliminated and a true and even surface shall be provided. Frayed edges shall be trimmed and holes and missing corners shall be patched with sod.

3.2.5 Rolling

Immediately after sodding, firm entire area except for slopes in excess of 3 to 1 with a roller not exceeding 90 pounds for each foot of roller width.

3.2.6 Watering

Start watering areas sodded as required by daily temperature and wind conditions. Apply water at a rate sufficient to ensure thorough wetting of soil to minimum depth of 6 inches. Run-off, puddling, and wilting shall be prevented. Unless otherwise directed, watering trucks shall not be driven over turf areas. Watering of other adjacent areas or plant material shall be prevented.

3.3 PROTECTION OF TURF AREAS

Immediately after turfing, protect area against traffic and other use.

3.4 RESTORATION

Restore to original condition existing turf areas which have been damaged during turf installation operations. Keep clean at all times at least one paved pedestrian access route and one paved vehicular access route to each building. Clean other paving when work in adjacent areas is complete.

-- End of Section --

SECTION 32 93 00

EXTERIOR PLANTS
08/17

PART 1 GENERAL

1.1 REFERENCES

The publications listed below form a part of this specification to the extent referenced. The publications are referred to within the text by the basic designation only.

AMERICANHORT (AH)

ANSI/ANLA Z60.1	(2004) American Standard for Nursery Stock

ASTM INTERNATIONAL (ASTM)

ASTM A580/A580M	(2018) Standard Specification for Stainless Steel Wire
ASTM C602	(2013a) Agricultural Liming Materials
ASTM D4972	(2018) Standard Test Methods for pH of Soils
ASTM D5268	(2013) Topsoil Used for Landscaping Purposes
ASTM D5852	(2000; R 2007; E 2014) Standard Test Method for Erodibility Determination of Soil in the Field or in the Laboratory by the Jet Index Method
ASTM D6629	(2001; R 2012; E 2012) Selection of Methods for Estimating Soil Loss by Erosion

TREE CARE INDUSTRY ASSOCIATION (TCIA)

TCIA A300P1	(2017) ANSI A300 Part1: Tree Care Operations - Trees, Shrubs and Other Woody Plant Maintenance Standard Practices - Pruning
TCIA Z133	(2017) American National Standard for Arboricultural Operations - Pruning, Repairing, Maintaining, and Removing Trees, and Cutting Brush - Safety Requirements

U.S. DEPARTMENT OF AGRICULTURE (USDA)

DOA SSIR 42	(1996) Soil Survey Investigation Report No. 42, Soil Survey Laboratory Methods Manual, Version 3.0

1.2 RELATED REQUIREMENTS

Section 31 00 00 EARTHWORK, Section 32 92 19 SEEDING, Section 32 92 23 SODDING,and Section 32 05 33 LANDSCAPE ESTABLISHMENT applies to this section for pesticide use and plant establishment requirements, with additions and modifications herein.

1.3 SUBMITTALS

Government approval is required for submittals with a "G" designation; submittals not having a "G" designation are for Contractor Quality Control approval. When used, a designation following the "G" designation identifies the office that will review the submittal for the Government. Submittals with an "LA" are for Government Landscape Architect review and approval. Submittals with an "S" are for inclusion in the Sustainability eNotebook, in conformance with Section 01 33 29 SUSTAINABILITY REPORTING. Submit the following in accordance with Section 01 33 00 SUBMITTAL PROCEDURES:

SD-01 Preconstruction Submittals

State Landscape Contractor's License

Time Restrictions and Planting Conditions

Indicate anticipated dates and locations for each type of planting.

SD-03 Product Data

Organic Mulch Materials

[Drainage Pipe

] Hardwood Mulch; G

Ground Stakes

Metal Edging

Fertilizer

Weed Control Fabric; G

[

] Staking Material

Metal Anchors

Watering Bags

[Antidesiccants

][

] SD-04 Samples

SD-06 Test Reports

Topsoil Composition Tests; Soil Test of proposed area; Soil Test location map

Percolation Test; Percolation Test of proposed area

SD-07 Certificates

Nursery Certifications

SD-10 Operation and Maintenance Data

Plastic Identification

When not labeled, identify types in Operation and Maintenance Manual.

1.4 QUALITY ASSURANCE

1.4.1 Topsoil Composition Tests

Commercial test from an independent testing laboratory or State Extension Serviceincluding basic soil groups (moisture and saturation percentages, Nitrogen-Phosphorus-Potassium (N-P-K) ratio, pH (ASTM D4972), soil salinity), secondary nutrient groups (calcium, magnesium, sodium, Sodium Absorption Ratio (SAR)), micronutrients (zinc, manganese, iron, copper), toxic soil elements (boron, chloride, sulfate), cation exchange and base saturation percentages, and soil amendment and fertilizer recommendations with quantities for plant material being transplanted. Soil required for each test must include a maximum depth of 18 inches of approximately one quart volume for each test. Areas sampled should not be larger than one acre and should contain at least 6-8 cores for each sample area and be thoroughly mixed. Problem areas should be sampled separately and compared with samples taken from adjacent non-problem areas. The location of the sample areas should be noted and marked on a parcel or planting map for future reference. Samples from six distinct new planting areas across the project site are required

1.4.2 Nursery Certifications

1.4.3 State Landscape Contractor's License

Construction company must hold a landscape contractors license in the state where the work is performed and have a minimum of five years landscape construction experience. Submit copy of license and three references for similar work completed in the last five years.

1.4.4 Plant Material Photographs

Contractor must submit nursery photographs, for government Landscape Architect approval prior to ordering, for each tree larger than 24-inch box/ 2-inch caliper size. Photographs must include and indication of

hieght, width, and caliper as appropriate.

1.4.5 Percolation Test

Immediately following rough grading operation, identify three typical locations for the largest trees and or shrubs and excavate a pits per the project details. Fill the pit with water to a depth of 12 inches. The length of time required for the water to percolate into the soil, leaving the pit empty, must be measured by the project Landscape Architect and verified by the Contracting Officer. Within six hours of the time the water has drained from the pit, the Contractor, with the Contracting Officer and project Landscape Architect present, must again fill the pit with water to a depth of 12 inches. If the water does not completely percolate into the soil within 9 hours, a determination must be made whether a drainage system or a soil penetrant will be required for each tree and or shrub being transplanted.

1.4.6 Erosion Assessment

Assess potential effects of soil management practices on soil loss in accordance with ASTM D6629. Assess erodibility of soil with dominant soil structure less than 2.8 to 3.1 inches in accordance with ASTM D5852.

1.4.7 Pre-Installation Meeting

Convene a pre-installation meeting a minimum of one week prior to commencing work of this section. Require attendance of parties directly affecting work of this section. Review conditions of operations, procedures and coordination with related work. Agenda must include the following:

a. Tour, inspect, and discuss conditions of planting materials.

b. Review planting schedule and maintenance.

c. Review required inspections.

d. Review environmental procedures.

1.5 DELIVERY, STORAGE, AND HANDLING

1.5.1 Delivery

1.5.1.1 Branched Plant Delivery

Deliver with branches tied and exposed branches covered with material which allows air circulation. Prevent damage to branches, trunks, root systems, and root balls and desiccation of leaves during transport. Ensure plant material is not subject to wind damage during transport. Any plant indicating transport damage or any other physical stress or damage will be rejected.

1.5.1.2 Soil Amendment Delivery

Deliver to the site in original, unopened containers bearing manufacturer's chemical analysis, name, trade name, or trademark, and indication of conformance to state and federal laws. Instead of containers, fertilizer,and lime may be furnished in bulk with a certificate indicating the above information. Store in dry locations away

from contaminates.

1.5.1.3 Plant Labels

Deliver plants with durable waterproof labels in weather-resistant ink. Provide labels stating the correct botanical and common plant name and variety as applicable and size as specified in the list of required plants. Attach to plants, bundles, and containers of plants. Groups of plants may be labeled by tagging one plant. Labels must be legible for a 60 days after delivery to the planting site after which time must be removed.

1.5.2 Storage

1.5.2.1 Plant Storage and Protection

Store and protect plants not planted on the day of arrival at the site as follows:

a. Shade and protect plants in outside storage areas from the wind and direct sunlight until planted.

b. Heel-in bare root plants.

c. Protect balled and burlapped plants from freezing or drying out by covering the balls or roots with moist burlap, sawdust, wood chips, shredded bark, peat moss, or other approved material. Provide covering which allows air circulation.

d. Keep plants in a moist condition until planted by watering with a fine mist spray.

e. Do not store plant material directly on concrete or bituminous surfaces.

1.5.2.2 Fertilizer, pH Adjusters and Mulch Storage

Store in dry locations away from contaminants.

1.5.2.3 Topsoil

Prior to stockpiling topsoil, eradicate on site undesirable growing vegetation. Clear and grub existing vegetation three to four weeks prior to stockpiling existing topsoil. Composition tests performed by an independent testing laboratory or State Extension Service must be performed prior to importing.

1.5.2.4 Weed Control Fabric

Store materials on site in enclosures or under protective covering in dry location. Store under cover out of direct sunlight. Do not store materials directly on ground.

1.5.3 Handling

Do not drop or dump plants from vehicles. Avoid damaging plants being moved from nursery or storage area to planting site. Handle all plants carefully to avoid damaging or breaking the earth ball or root structure. Do not handle plants by the trunk or stem. Puddle bare-root plants after

removal from the heeling-in bed to protect roots from drying out. Remove damaged plants from the site. Damaged plants will be rejected.

1.5.4 TIME LIMITATION

Except for container-grown plant material, the time limitation from digging to installing plant material must be a maximum of 90 days. The time limitation between installing the plant material and placing the mulch must be a maximum of 24 hours.

1.6 TIME RESTRICTIONS AND PLANTING CONDITIONS

Coordinate installation of planting materials during optimal planting seasons for each type of plant material required.

1.6.1 Planting Dates

1.6.2 Restrictions

Do not plant when ground is frozen, muddy, or when air temperature exceeds 90degrees Fahrenheit

1.7 GUARANTEE

All plants must be guaranteed for one yearbeginning on the date of final inspection and acceptanceby the Contracting Officer and government Landscpe Architect. Upon acceptance,commence the plant establishment period, protectagainst defects including death and unsatisfactory growth, except for abuse by the Government or by extremeweather conditions unusual for the warranty period.

Guarantee plants from the time of acceptance for one calendar year unless otherwise indicated.

Remove and replace dead planting materials immediately unless required to plant in the succeeding planting season. At end of warranty period, replace all planting materials that die or have 25 percent or more of their branches that die during the construction operations or the guarantee period. All replacement plant material will be warrantied for an additional calendar year from the time of acceptance.

1.8 PLASTIC IDENTIFICATION

Provide product data indicating polymeric information in Operation and Maintenance Manual.

Type 1: Polyethylene Terephthalate (PET, PETE).
Type 2: High Density Polyethylene (HDPE).
Type 3: Vinyl (Polyvinyl Chloride or PVC).
Type 4: Low Density Polyethylene (LDPE).
Type 5: Polypropylene (PP).
Type 6: Polystyrene (PS).
Type 7: Other. Use of this code indicates that the package in question is made with a resin other than the six listed above, or is made of more than one resin listed above, and used in a multi-layer combination.

PART 2 PRODUCTS

2.1 PLANTS

2.1.1 Regulations and Varieties

Furnish nursery stock in accordance with ANSI/ANLA Z60.1, except as otherwise specified or indicated. Each plant or group of planting must have a "key" number indicated on the nursery certifications of the plant schedule. Furnish plants, including turf grass, grown under climatic conditions similar to those in the locality of the project. Plant substitutions must be native, low maintenance varieties, tolerant of site's existing soils and climate without supplemental irrigation or fertilization once established. All substitutions require review and approval by government Landscape Architect. Spray plants budding into leaf or having soft growth with an antidesiccant before digging. Plants of the same specified size must be of uniform size and character of growth. All plants must comply with all Federal and State Laws requiring inspection for plant diseases and infestation.

2.1.2 Shape and Condition

Well-branched, well-formed, sound, vigorous, healthy planting stock free from disease, sunscald, windburn, abrasion, and harmful insects or insect eggs and having a healthy, normal, and undamaged root system.

2.1.2.1 Deciduous Trees and Shrubs

Symmetrically developed and of uniform habit of growth, with straight boles or stems, and free from objectionable disfigurements.

2.1.2.2 Evergreen Trees and Shrubs

Well developed symmetrical tops with typical spread of branches for each particular species or variety.

2.1.2.3 Ground Covers and Vines

Number and length of runners and clump sizes indicated, and of the proper age for the grade of plants indicated, furnished in removable containers, integral containers, or formed homogeneous soil section.

2.1.3 Plant Size

Minimum sizes measured after pruning and with branches in normal position, must conform to measurements indicated, based on the average width or height of the plant for the species as specified in ANSI/ANLA Z60.1. Plants larger in size than specified may be provided with approval of the government Landscape Architect. When larger plants are provided, increase the ball of earth or spread of roots in accordance with ANSI/ANLA Z60.1.

2.1.4 Root Ball Size

All box-grown, field potted, field boxed, collected, plantation grown, bare root, balled and burlapped, container grown, processed-balled, and in-ground fabric bag-grown root balls must conform to ANSI/ANLA Z60.1. All wrappings and ties must be biodegradable. Root growth in container grown plants must be sufficient to hold earth intact when removed from containers. Root bound plants will not be accepted.

[2.1.4.1 Mycorrhizal fungi inoculum

Before shipment,root systems must contain mycorrhizal fungi inoculum.

]2.1.5 Growth of Trunk and Crown

2.1.5.1 Deciduous Trees

A height to caliper relationship must be provided in accordance with ANSI/ANLA Z60.1. Height of branching must bear a relationship to the size and species of tree specified and with the crown in good balance with the trunk. The trees must not be "poled" or the leader removed. All trees mus be limbed up a minimum of 3' above finished grade. Ensure no branching obtrusively extends into pedestrian walkways or patios.

a. Single stem: The trunk must be reasonably straight and symmetrical with crown and have a persistent main leader.

b. Multi-stem: All countable stems, in aggregate, must average the size specified. To be considered a stem, there must be no division of the trunk which branches more than 6 inches from ground level.

2.1.5.2 Palms

Palms must have the specified height as measured from the base of the trunk to the base of the fronds or foliage in accordance with ANSI/ANLA Z60.1. The palm must have straight trunk and healthy fronds or foliage as typical for the variety grown in the region of the project. Palms trimmed or pruned for delivery must retain a minimum of 6 inches of foliage at the crown as a means of determining plant health.

2.1.5.3 Deciduous Shrubs

Deciduous shrubs must have the height and number of primary stems recommended by ANSI/ANLA Z60.1. Acceptable plant material must be well shaped, with sufficient well-spaced side branches, and recognized by the trade as typical for the species grown in the region of the project.

2.1.5.4 Coniferous Evergreen Plant Material

Coniferous Evergreen plant material must have the height-to-spread ratio recommended by ANSI/ANLA Z60.1. The coniferous evergreen trees must not be "poled" or the leader removed. Acceptable plant material must be exceptionally heavy, well shaped and trimmed to form a symmetrical and tightly knit plant. The form of growth desired must be as indicated.

2.1.5.5 Broadleaf Evergreen Plant Material

Broadleaf evergreen plant material must have the height-to-spread ratio recommended by ANSI/ANLA Z60.1. Acceptable plant material must be well shaped and recognized by the trade as typical for the variety grown in the region of the project.

2.1.5.6 Ground Cover and Vine Plant Material

Ground cover and vine plant material must have the minimum number of runners and length of runner recommended by ANSI/ANLA Z60.1. Plant material must have heavy, well developed and balanced crown with vigorous, well developed root system and must be furnished in containers.

2.2 TOPSOIL

2.2.1 Existing Soil

Modify to conform to requirements specified in paragraph COMPOSITION.

2.2.2 Off-Site Topsoil

Conform to requirements specified in paragraph COMPOSITION. Additional topsoil must be furnished by the Contractor.

2.2.3 Composition

Evaluate soil for use as topsoil in accordance with ASTM D5268. From 5 to 10 percent organic matter as determined by the topsoil composition tests of the Organic Carbon, 6A, Chemical Analysis Method described in DOA SSIR 42. Maximum particle size, 3/4 inch, with maximum 3 percent retained on 1/4 inch screen. The pH must be tested in accordance with ASTM D4972. Topsoil must be free of sticks, stones, roots, plants, and other debris and objectionable materials. Other components must conform to the following limits:

Silt	7 to 17percent
Clay	4 to 12percent
Sand	70 to 82percent
pH	5.8 to 7.0

2.3 SOIL CONDITIONERS

Provide singly or in combination as required to meet specified requirements for topsoil. Soil conditioners must be nontoxic to plants.

2.3.1 Lime

Agricultural grade limestone containing a calcium carbonate equivalent (C.C.E.) as specified in ASTM C602.

2.3.2 Sand

Clean and free of materials harmful to plants.

2.4 PLANTING SOIL MIXTURES

100 percent topsoil as specified herein.

Sandy topsoil: one part topsoil to one part peat; clay topsoil: two parts topsoil to one part peat. Thoroughly mix all parts of planting soil mixture to a uniform blend throughout.

2.5 FERTILIZER

2.5.1 Granular Fertilizer

Organic, granular controlled release fertilizer containing the following minimum percentages, by weight, of plant food nutrients:

10 percent available nitrogen
10 percent available phosphorus
10percent available potassium

2.6 WEED CONTROL FABRIC

2.6.1 Roll Type Polypropylene or Polyester Mats

Fabric must be woven, needle punched or non-woven and treated for protection against deterioration due to ultraviolet radiation. Fabric must be minimum 99 percent opaque to prevent photosynthesis and seed germination from occurring, yet allowing air, water and nutrients to pass thru to the roots. Minimum weight must be 5 ounces per square yard with a minimum thickness of 20 mils with a 20 year (minimum) guarantee.

]2.7 MULCH

Free from noxious weeds, mold, pesticides, or other deleterious materials.

2.7.1 Inert Mulch Materials

Provide riverbank stone, ranging in size from 4 to 6 inches

2.7.2 Organic Mulch Materials

Provide shredded hardwood, 3" thick. No dyes permitted.

2.8 STAKING AND GUYING MATERIAL

2.8.1 Staking Material

2.8.1.1 Tree Support Stakes

Metalstakes must be minimum 8 feet long, pointed at one end.[

2.8.2 Guying Material

2.8.2.1 Guying Wire

12 gauge annealed galvanized steel, ASTM A580/A580M.

2.8.2.2 Guying Cable

Minimum five-strand, 3/16 inch diameter galvanized steel cable [plastic coated].

2.8.3 Hose Chafing Guards

New or used 2 ply 3/4 inch diameter reinforced rubber or plastic hose, black or dark green, all of same color.

2.8.4 Flags

White surveyor's plastic tape, fastened to guying wires or cables.

2.8.5 Turnbuckles

Galvanized or cadmium-plated steel with minimum 3 inch long openings fitted with screw eyes. Eye bolts must be galvanized or cadmium-plated steel with one inch diameter eyes and screw length 1-1/2 inches, minimum.

2.8.6 Metal Anchors

2.8.6.1 Driven Anchors

Malleable iron, arrow shaped, galvanized, sized as follows:

Tree Caliper	Anchor Size
2 inches and under	3 inches
3 to 6 inches	4 inches
6 to 8 inches	6 inches
8 to 10 inches	8 inches
10 to 12 inches	10 inches

[2.9 ANTIDESICCANTS

Sprayable, water insoluble vinyl-vinledine complex which produce a moisture retarding barrier not removable by rain or snow. Film must form at temperatures commonly encountered out of doors during planting season and have a moisture vapor transmission rate (MVT) of the resultant film of maximum 10 grams per 24 hours at 70 percent humidity.

][][]2.10 WATER

Source of water to be approved by Contracting Officer and suitable quality for irrigation and must not contain elements toxic to plant life, including acids, alkalis, salts, chemical pollutants, and organic matter. Use collected storm water or graywater when available.

[2.11 MYCORRHIZAL FUNGI INOCULUM

Mycorrhizal fungi inoculum must be composed of multiple-fungus inoculum as recommended by the manufacturer for the plant material specified.

]2.12 SOURCE QUALITY CONTROL

The [Contracting Officer][and Landscape Architect of Record] [_____] will inspect plant materials at the [project] site and approve them. Tag plant materials for size and quality.

PART 3 EXECUTION

3.1 EXTENT OF WORK

Provide soil preparation, including [soil conditioners] [and] [soil amendments] prior to planting. Provide [tree,] [shrub,] [vine,]

[groundcover,] [seed,] [and] [sod] planting, [post-planting fertilizer,] [edging,] [staking,] [guying,] [weed control fabric,] [erosion control material,] [root control barrier] installation,[_____,] [and] [mulch topdressing] of all newly graded finished earth surfaces, unless indicated otherwise, and at all areas inside or outside the limits of construction that are disturbed by the Contractor's operations.

3.2 PREPARATION

3.2.1 Protection

Protect existing and proposed landscape features, elements, and sites from damage or contamination. Protect trees, vegetation, and other designated features by erecting high-visibility, reusable construction fencing. Locate fence no closer to trees than the drip line. Plan equipment and vehicle access to minimize and confine soil disturbance and compaction to areas indicated on Drawings.

3.2.2 Layout

Stake out approved plant material locations and planter bed outlines on the project site before digging plant pits or beds. The Contracting Officer reserves the right to adjust plant material locations to meet field conditions. Do not plant closer than [12] [24] [36] [_____] inches to a [building wall,] [pavement edge,] [fence or wall edge] [and] [other similar structures]. Provide on-site locations for excavated rock, soil, and vegetation.

3.2.3 Erosion Control

Provide erosion control and seeding with native plant species to protect slopes.

3.2.4 Soil Preparation

[3.2.4.1 pH Adjuster Application Rates

Apply pH adjuster at rates as determined by laboratory soil analysis.

3.2.4.2 Fertilizer Application Rates

Apply fertilizer at rates as determined by laboratory soil analysis of the soils at the job site.

3.2.5 Subsoil Drainage for Plant Pits and Beds

In the event percolation rates or positive drainage away from any structure can not be achieved provide a system of perforated drain pipe with perforations down. Provide government Landscape Architect a drainage shop drawing for review and approval. Backfill trenches as specified in Section 31 23 00.00 20 EXCAVATION AND FILL.

3.3 PLANT BED PREPARATION

Verify location of underground utilities prior to excavation. Protect existing adjacent turf before excavations are made. Do not disturb topsoil and vegetation in areas outside the Limit of Disturbance. Where planting beds occur in existing turf areas, remove turf to a depth that will ensure removal of entire root system. Measure depth of plant pits from finished grade. Depth of plant pit excavation must be as indicated and provide proper relation between top of root ball and finished grade.

Install plant material as specified in paragraph PLANT INSTALLATION. Do not install trees within 10 feet of any utility lines or building walls.

3.4 PLANT INSTALLATION

3.4.1 Individual Plant Pit Excavation

Excavate pits at least twice as large in diameter as the size of ball or container to depth shown.

3.4.2 Plant Beds with Multiple Plants

Excavate plant beds continuously throughout entire bed as outlined to depth shown.

3.4.3 Handling and Setting

Move plant materials only by supporting the root ball. Set plants on hand compacted layer of prepared backfill soil mixture.Set plants on native soil and hold plumb in the center of the pit until soil has been tamped firmly around root ball. Replace plant material whose root balls are cracked or damaged either before or during the planting process.

Plant material must be set in plant beds according to the drawings. Backfill soil mixture must be placed on previously scarified subsoil to completely surround the root balls, and must be brought to a smooth and even surface, blending to existing areas.

3.4.3.1 Balled and Burlapped Stock

Backfill with [prepared soil mixture] [topsoil] to approximately half the depth of ball and then tamp and water. Carefully remove or fold back excess burlap and tying materials from the top a minimum 1/3 depth from the top of the rootball. Tamp and complete backfill, place mulch topdressing, and water. Remove wires and non-biodegradable materials from plant pit prior to backfill operations.

3.4.3.2 Bare-Root Stock

Plant so roots are arranged in a natural position. Place roots in water a minimum of 30 minutes prior to planting. Carefully work prepared soil mixture among roots. Tamp remainder of backfill, place mulch topdressing and water.

3.4.3.3 Container Grown Stock

Remove from container and prevent damage to plant or root system.

3.4.3.4 Ground Covers and Vines

[Plant after placing mulch topdressing. Do not remove plant materials from flats or containers until immediately before planting. Space at intervals indicated. Plant at a depth to sufficiently cover all roots. Start watering areas planted as required by temperature and wind conditions. Apply water at a rate sufficient to ensure thorough wetting of soil to a depth of [6] [_____] inches without run off or puddling. Smooth planting areas after planting to provide even, smooth finish. [Mulch as indicated.]

][Smooth planting areas before planting to provide even, smooth finish.

Plant after placing weed control fabric and mulch topdressing. Do not remove plant material from flats or containers until immediately before planting. Space at the intervals indicated. Plant at a depth to sufficiently cover all roots. Start watering areas planted as required by temperature and wind conditions. Apply water at a rate sufficient to ensure thorough wetting of soil to a depth of [6] [_____] inches without run off or puddling. Add mulch topdressing as needed.

]3.4.4 Earth Mounded Watering Basin for Individual Plant Pits

[Form with topsoil around each plant by replacing a mound of topsoil around the edge of each plant pit. Watering basins must be 6 inches deep for trees and 4 inches deep for shrubs. Eliminate basins around plants in plant beds containing multiple plants.

][Form with topsoil around each plant by placing a mound of topsoil around the edge of each plant pit. Watering basins must be 6 inches deep for trees and 4 inches deep for shrubs. Construct watering basin in a 4-1/2 foot diameter circle around specimen (not planted in a close group) trees and shrubs.

][3.4.5 Weed Control Fabric Installation

Remove grass and weed vegetation, including roots, from within the area enclosed by edging. Completely cover areas enclosed by edging with specified weed control fabric prior to placing mulch layer. Overlap cut edges [6] [_____] inches.

][3.4.6 Erosion Control Material

Install in accordance with manufacturer's instructions.

]3.4.7 Placement of Mulch Topdressing

Place specified mulch topdressing on top of weed control fabric covering total area enclosed by edging. Place mulch topdressing to a depth of [3] [_____] inches.

3.4.8 Mulch Topdressing

Provide mulch topdressing over entire planter bed surfaces and individual plant surfaces including earth mound watering basin around plants to a depth of [3] [_____] inches after completion of plant installation and before watering. Keep mulch out of the crowns of shrubs. Place mulch a minimum 2 to 3 inches[_____] away from trunk of shrub or tree. Place on top of any weed control fabric.

[3.4.9 Installation of Edging

Uniformly edge beds of plants to provide a clear cut division line between planted area and adjacent lawn. Construct bed shapes as indicated. Install [wood] [plastic] [concrete] edging material [as indicated] [and] [as per manufacturer's instructions]. [Install edging material in a perfect 4 foot diameter circle inside the 4-1/2 foot watering basin, around individual specimen trees and shrubs not planted in a close group.] Install edging with minimum [one inch] [_____] left above ground level.

]3.4.10 Fertilization

3.4.10.1 Fertilizer Tablets

Place fertilizer planting tablets evenly spaced around the plant pits to the manufacturer's recommended depth.

3.4.10.2 Granular Fertilizer

Apply granular fertilizer as a top coat prior to placing mulch layer and water thoroughly.

3.4.11 Watering

Start watering areas planted as required by temperature and wind conditions. Slow deep watering must be used. Apply water at a rate sufficient to ensure thorough wetting of soil to a depth of [12] [_____] inches without run off or puddling. Watering of other plant material or adjacent areas must be prevented.

3.4.12 Staking and Guying

3.4.12.1 Staking

Stake plants with the number of stakes indicated complete with [double strand of 12 gage guy wire] [_____] as detailed. Attach [guy wire] [_____] half the tree height but not more than 5 feet high. Drive stakes to a depth of [2-1/2 to 3] [_____] feet into the ground outside the plant pit. Do not injure the root ball.[Use hose chafer guards where guy wire comes in contact with tree trunk.]

3.4.12.2 Guying

Guy plants as indicated. Attach [two strands of guying wire] [guying cable] around the tree trunk at an angle of 45 degrees at approximately 1/2 of the trunk height [_____]. Protect tree trunks with chafing guards where guying [wire] [cable] contacts the tree trunk. Anchor guys to [deadmen wood blocks] [wood ground stakes] [malleable iron anchors] [steel screw anchors]. Fasten flags to each guying [wire] [cable] approximately 2/3 of the distance up from ground level.[Provide turnbuckles as indicated.]

3.4.12.3 Chafing Guards

Use hose chafing guards, as specified where guy [wire] [cable] will contact the plant.

[3.4.12.4 Deadmen

Place deadmen minimum 18 inches below ground surface. Place equal distance from tree trunk and around the plant pit.

][3.4.12.5 Wood Ground Stakes

Drive wood ground stakes into firm ground outside of plant pit with top of stake flush with ground. Place equal distance from tree trunk and around the plant pit.

][3.4.12.6 Iron Anchors

Drive malleable iron anchors into firm ground outside of plant pit a minimum 30 inches below finish grade. Place equal distance from tree trunk and around the plant pit.

][3.4.12.7 Steel Screw Anchors

Insert steel screw anchors as recommended in manufacturer's data. Place equal distance from tree trunk and around the plant pit.

][3.4.12.8 Flags

Securely fasten flags on each guy [wire] [and][cable] [approximately two-thirds of the distance up from ground level].

]3.4.13 Pruning

Prune in accordance with safety requirement of TCIA Z133.

3.4.13.1 Trees and Shrubs

Remove dead and broken branches. Prune to correct structural defects only. Retain typical growth shape of individual plants with as much height and spread as practical. Do not cut central leader on trees. Make cuts with sharp instruments. Do not flush cut with trunk or adjacent branches. Collars must remain in place. Pruning must be accomplished by trained and experienced personnel and must be accordance with TCIA A300P1.

3.4.13.2 Wound Dressing

Do not apply tree wound dressing to cuts.

3.5 RESTORATION AND CLEAN UP

3.5.1 Restoration

Turf areas, pavements and facilities that have been damaged from the planting operation must be restored to original condition at the Contractor's expense.

3.5.2 Clean Up

Excess and waste material must be removed from the installed area and must be [disposed offsite at an approved landfill, recycling center, or composting center][composted on site]. Separate and recycle or reuse the following landscape waste materials: [nylon straps,] [wire,] [ball wrap,] [burlap,] [wood stakes,] [_____]. Adjacent paved areas must be cleared.

-- End of Section --

SECTION 33 11 00

WATER UTILITY DISTRIBUTION PIPING
02/18

PART 1 GENERAL
1.1 REFERENCES

The publications listed below form a part of this specification to the extent referenced. The publications are referred to within the text by the basic designation only.

AMERICAN SOCIETY OF MECHANICAL ENGINEERS (ASME)

ASME B1.20.1	(2013; R 2018) Pipe Threads, General Purpose (Inch)
ASME B1.20.3	(1976; R 2013) Dryseal Pipe Threads (Inch)
ASME B16.1	(2015) Gray Iron Pipe Flanges and Flanged Fittings Classes 25, 125, and 250
ASME B16.18	(2018) Cast Copper Alloy Solder Joint Pressure Fittings
ASME B16.26	(2018) Standard for Cast Copper Alloy Fittings for Flared Copper Tubes
ASME B18.2.2	(2015) Nuts for General Applications: Machine Screw Nuts, Hex, Square, Hex Flange, and Coupling Nuts (Inch Series)
ASME B18.5.2.1M	(2006; R 2011) Metric Round Head Short Square Neck Bolts
ASME B18.5.2.2M	(1982; R 2010) Metric Round Head Square Neck Bolts

AMERICAN WATER WORKS ASSOCIATION (AWWA)

AWWA B300	(2010; Addenda 2011) Hypochlorites
AWWA B301	(2010) Liquid Chlorine
AWWA C104/A21.4	(2016) Cement-Mortar Lining for Ductile-Iron Pipe and Fittings for Water
AWWA C105/A21.5	(2010) Polyethylene Encasement for Ductile-Iron Pipe Systems
AWWA C110/A21.10	(2012) Ductile-Iron and Gray-Iron Fittings for Water
AWWA C111/A21.11	(2017) Rubber-Gasket Joints for Ductile-Iron Pressure Pipe and Fittings
AWWA C115/A21.15	(2011) Flanged Ductile-Iron Pipe With Ductile-Iron or Gray-Iron Threaded Flanges

AWWA C151/A21.51	(2017) Ductile-Iron Pipe, Centrifugally Cast
AWWA C153/A21.53	(2019) Ductile-Iron Compact Fittings for Water Service
AWWA C500	(2009) Metal-Seated Gate Valves for Water Supply Service
AWWA C502	(2018) Dry-Barrel Fire Hydrants
AWWA C503	(2018) Wet-Barrel Fire Hydrants
AWWA C504	(2015) Standard for Rubber-Seated Butterfly Valves
AWWA C508	(2017) Swing-Check Valves for Waterworks Service, 2 In. Through 48-In. (50-mm Through 1,200-mm) NPS
AWWA C509	(2015) Resilient-Seated Gate Valves for Water Supply Service
AWWA C512	(2015) Air-Release, Air/Vacuum, and Combination Air Valves for Water and Wastewater Service
AWWA C515	(2015) Reduced-Wall, Resilient-Seated Gate Valves for Water Supply Service
AWWA C600	(2017) Installation of Ductile-Iron Mains and Their Appurtenances
AWWA C605	(2014) Underground Installation of Polyvinyl Chloride (PVC) and Molecularly Oriented Polyvinyl Chloride (PVCO) Pressure Pipe and Fittings
AWWA C651	(2014) Standard for Disinfecting Water Mains
AWWA C655	(2009) Field Dechlorination
AWWA C700	(2015) Cold-Water Meters - Displacement Type, Metal Alloy Main Case
AWWA C701	(2015) Cold-Water Meters - Turbine Type for Customer Service
AWWA C706	(2010) Direct-Reading, Remote-Registration Systems for Cold-Water Meters
AWWA C800	(2014) Underground Service Line Valves and Fittings
AWWA C900	(2016) Polyvinyl Chloride (PVC) Pressure Pipe, and Fabricated Fittings, 4 In. Through 60 In. (100 mm Through 1,500 mm)

AWWA C906	(2015) Polyethylene (PE) Pressure Pipe and Fittings, 4 In. (100 mm) through 65 In., (1,575 mm) for Water Distribution and Transmission
AWWA M6	(2012) Water Meters - Selection, Installation, Testing, and Maintenance
AWWA M23	(2002; 2nd Ed) Manual: PVC Pipe - Design and Installation
AWWA M41	(2009; 3rd Ed) Ductile-Iron Pipe and Fittings
AWWA M55	(2006) PE Pipe - Design and Installation

ASTM INTERNATIONAL (ASTM)

ASTM A47/A47M	(1999; R 2018; E 2018) Standard Specification for Ferritic Malleable Iron Castings
ASTM A48/A48M	(2003; R 2012) Standard Specification for Gray Iron Castings
ASTM A307	(2014; E 2017) Standard Specification for Carbon Steel Bolts, Studs, and Threaded Rod 60 000 PSI Tensile Strength
ASTM A536	(1984; R 2014) Standard Specification for Ductile Iron Castings
ASTM A563	(2015) Standard Specification for Carbon and Alloy Steel Nuts
ASTM B32	(2008; R 2014) Standard Specification for Solder Metal
ASTM B61	(2015) Standard Specification for Steam or Valve Bronze Castings
ASTM B62	(2017) Standard Specification for Composition Bronze or Ounce Metal Castings
ASTM B88	(2016) Standard Specification for Seamless Copper Water Tube
ASTM C94/C94M	(2018) Standard Specification for Ready-Mixed Concrete
ASTM D1784	(2011) Standard Specification for Rigid Poly(Vinyl Chloride) (PVC) Compounds and Chlorinated Poly(Vinyl Chloride) (CPVC) Compounds
ASTM D1785	(2015; E 2018) Standard Specification for Poly(Vinyl Chloride) (PVC), Plastic Pipe, Schedules 40, 80, and 120

ASTM D2241	(2015) Standard Specification for Poly(Vinyl Chloride) (PVC) Pressure-Rated Pipe (SDR Series)
ASTM D2466	(2017) Standard Specification for Poly(Vinyl Chloride) (PVC) Plastic Pipe Fittings, Schedule 40
ASTM D2467	(2015) Standard Specification for Poly(Vinyl Chloride) (PVC) Plastic Pipe Fittings, Schedule 80
ASTM D2774	(2012) Underground Installation of Thermoplastic Pressure Piping
ASTM D2855	(2015) Standard Practice for Making Solvent-Cemented Joints with Poly(Vinyl Chloride) (PVC) Pipe and Fittings
ASTM D3035	(2015) Polyethylene (PE) Plastic Pipe (DR-PR) Based on Controlled Outside Diameter
ASTM D3139	(1998; R 2011) Joints for Plastic Pressure Pipes Using Flexible Elastomeric Seals
ASTM F402	(2005; R 2012) Safe Handling of Solvent Cements, Primers, and Cleaners Used for Joining Thermoplastic Pipe and Fittings
ASTM F477	(2014) Standard Specification for Elastomeric Seals (Gaskets) for Joining Plastic Pipe
ASTM F714	(2013; R 2019) Standard Specification for Polyethylene (PE) Plastic Pipe (DR-PR) Based on Outside Diameter
ASTM F1674	(2011) Standard Test Method for Joint Restraint Products for Use with PVC Pipe
ASTM F1962	(2011) Standard Guide for Use of Maxi-Horizontal Directional Drilling for Placement of Polyethylene Pipe or Conduit Under Obstacles, Including River Crossings
ASTM F2164	(2018) Standard Practice for Field Leak Testing of Polyethylene (PE) and Crosslinked Polyethylene (PEX) Pressure Piping Systems Using Hydrostatic Pressure

FOUNDATION FOR CROSS-CONNECTION CONTROL AND HYDRAULIC RESEARCH (FCCCHR)

FCCCHR List	(continuously updated) List of Approved Backflow Prevention Assemblies
FCCCHR Manual	(10th Edition) Manual of Cross-Connection

Control

MANUFACTURERS STANDARDIZATION SOCIETY OF THE VALVE AND FITTINGS INDUSTRY (MSS)

MSS SP-80	(2013) Bronze Gate, Globe, Angle and Check Valves

NATIONAL FIRE PROTECTION ASSOCIATION (NFPA)

NFPA 24	(2016; ERTA 2016) Standard for the Installation of Private Fire Service Mains and Their Appurtenances
NFPA 1961	(2013) Standard on Fire Hose

NSF INTERNATIONAL (NSF)

NSF 372	(2016) Drinking Water System Components - Lead Content
NSF/ANSI 14	(2018) Plastics Piping System Components and Related Materials
NSF/ANSI 61	(2019) Drinking Water System Components - Health Effects

U.S. DEPARTMENT OF DEFENSE (DOD)

UFC 3-600-01	(2016; with Change 3, 2019) Fire Protection Engineering for Facilities

UNDERWRITERS LABORATORIES (UL)

UL 246	(2011; Reprint Dec 2018) UL Standard for Safety Hydrants for Fire-Protection Service
UL 262	(2004; Reprint Oct 2011) Gate Valves for Fire-Protection Service
UL 312	(2010; Reprint Mar 2018) UL Standard for Safety Check Valves for Fire-Protection Service

UNI-BELL PVC PIPE ASSOCIATION (UBPPA)

UBPPA UNI-PUB-08	(2016) Tapping Guide for PVC Pressure Pipe

1.2 DEFINITIONS

1.2.1 Water Mains

Water mains include water piping having diameters 4 through 14 inch, specific materials, methods of joining and any appurtenances deemed necessary for a satisfactory system.

1.2.2 Water Service Lines

Water service lines include water piping from a water main to a building

service at a point indicated on the drawings, specific materials, methods of joining and any appurtenances deemed necessary for a satisfactory system.

1.2.3 Additional Definitions

For additional definitions refer to the definitions in the applicable referenced standard.

1.3 SUBMITTALS

Government approval is required for submittals with a "G" designation; submittals not having a "G" designation are for Contractor Quality Control approval. Submittals with an "S" are for inclusion in the Sustainability eNotebook, in conformance with Section 01 33 29 SUSTAINABILITY REPORTING. Submit the following in accordance with Section 01 33 00 SUBMITTAL PROCEDURES:

SD-01 Preconstruction Submittals

Connections; G

SD-03 Product Data

Pipe, Fittings, Joints and Couplings; G

Ball And Socket Joint; G

Valves; G

Valve Boxes; G

Fire Hydrants; G

Pipe Restraint; G

Tapping Sleeves; G

Corporation Stops; G

Backflow Preventer; G

Railroad Crossing Casing Pipe; G

Precast Concrete Thrust Blocks; G

Disinfection Procedures; G

SD-06 Test Reports

Backflow Preventer Tests; G

Bacteriological Samples; G

Post-Construction Fusion Report; G

Hydrostatic Sewer Test

Leakage Test

Hydrostatic Test

SD-07 Certificates

Pipe, Fittings, Joints and Couplings

Lining

Lining for Fittings

Valves

Fire Hydrants

Backflow Prevention Training Certificate

Backflow Tester Certification

Fusion Technician Qualifications; G

Turbine Type Meters

Propeller Type Meters

Displacement Type Meters

Compound Type Meters

Fire Service Type Meters

Backflow Certificate

SD-08 Manufacturer's Instructions

Ductile Iron Piping

PVC Piping

PVCO Piping

Polyethylene (PE) Pipe

PVC Piping For Service Lines

Copper Pipe For Service Lines

1.4 QUALITY CONTROL

1.4.1 Regulatory Requirements

Comply with NSF/ANSI 14 or NSF/ANSI 61 and NSF 372 for materials for potable water systems; comply with lead content requirements for "lead-free" plumbing as defined by the U.S. Safe Drinking Water Act effective January 2014. Provide materials bearing the seal of the National Sanitation Foundation (NSF) for potable water service.

Comply with NFPA 24 for materials, installation, and testing of fire main piping and components.

1.4.2 Qualifications

1.4.2.1 Backflow Preventers

1.4.2.1.1 Backflow Preventer Certificate

Certificate of Full Approval from FCCCHR List, University of Southern California, attesting that the design, size and make of each backflow preventer has satisfactorily passed the complete sequence of performance testing and evaluation for the respective level of approval. Certificate of Provisional Approval will not be acceptable.

1.4.2.1.1.1 Backflow Tester Certificate

Prior to testing, submit to the Contracting Officer certification issued by the State or local regulatory agency attesting that the backflow tester has successfully completed a certification course sponsored by the regulatory agency. Tester must not be affiliated with any company participating in any other phase of this Contract.

1.4.2.1.1.2 Backflow Prevention Training Certificate

Submit a certificate recognized by the State or local authority that states the Contractor has completed at least 10 hours of training in backflow preventer installations. The certificate must be current.

1.4.2.2 Fusion Technician Qualifications

Submit a certificate from the manufacturer of the fusible pipe that shows the fusion technician is fully qualified to install fusible pipe of the types and sizes being used. Qualification must be current as of the actual date of fusion performance on the project.

1.5 DELIVERY, STORAGE, AND HANDLING

1.5.1 Delivery and Storage

Inspect materials delivered to site for damage. Unload and store with minimum handling and in accordance with manufacturer's instructions. Store materials on site in enclosures or under protective covering. Store plastic piping, jointing materials and rubber gaskets under cover out of direct sunlight. Do not store materials directly on the ground. Keep inside of pipes, fittings, valves, fire hydrants, and other accessories free of dirt and debris.

1.5.2 Handling

Handle pipe, fittings, valves, fire hydrants, and other accessories in accordance with manufacturer's instructions and in a manner to ensure delivery to the trench in sound undamaged condition. Avoid injury to coatings and linings on pipe and fittings; make repairs if coatings or linings are damaged. Do not place other material, hooks, or pipe inside a pipe or fitting after the coating has been applied. Inspect the pipe for defects before installation. Carry, do not drag pipe to the trench. Use of pinch bars and tongs for aligning or turning pipe will be permitted only on the bare ends of the pipe. Clean the interior of pipe and

accessories of foreign matter before being lowered into the trench and keep them clean during laying operations by plugging. Replace defective material without additional expense to the Government. Store rubber gaskets, not immediately installed, under cover or out of direct sunlight.

Handle ductile iron pipe, fittings, and accessories in accordance with AWWA C600 and AWWA M41. Handle PVC and PVCO pipe, fittings, and accessories in accordance with AWWA C605. Handle PE pipe, fittings, and accessories in accordance with AWWA M55.

PART 2 PRODUCTS

2.1 MATERIALS

Provide all materials in accordance with AWWA C800 and as indicated herein. Provide valves and fittings with pressure ratings equivalent to the pressure ratings of the pipe.

2.1.1 Pipe, Fittings, Joints And Couplings

Submit manufacturer's standard drawings or catalog cuts, except submit both drawings and cuts for push-on and rubber-gasketed bell-and-spigot joints. Include information concerning gaskets with submittal for joints and couplings.

2.1.1.1 Ductile-Iron Piping

2.1.1.1.1 Pipe and Fittings

Pipe, except flanged pipe, AWWA C151/A21.51, Pressure Class 350 . Flanged pipe, AWWA C115/A21.15. Fittings, AWWA C110/A21.10 or AWWA C153/A21.53; fittings with push-on joint ends are to meet the same requirements as fittings with mechanical-joint ends, except for the factory modified bell design. Provide fittings with pressure ratings equivalent to that of the pipe. Provide compatible pipe ends and fittings for the specified joints. Provide cement-mortar lining, AWWA C104/A21.4, standard thickness on pipe and fittings.

2.1.1.1.2 Joints and Jointing Material

Provide push-on joints or mechanical joints for pipe and fittings unless otherwise indicated. Provide mechanically coupled type joints using a sleeve-type mechanical coupling where indicated.

a. Push-On Joints: Shape of pipe ends and fitting ends, gaskets, and lubricant for joint assembly as recommended in AWWA C111/A21.11.

b. Mechanical Joints: Dimensional and material requirements for pipe ends, glands, bolts and nuts, and gaskets as recommended in AWWA C111/A21.11.

c. Flanged Joints: Bolts, nuts, and gaskets for flanged connections as recommended in Appendix A of AWWA C115/A21.15. Provide AWWA C115/A21.15 ductile iron flanges and conform to ASME B16.1, Class 125. Provide ASTM A536 epoxy coated steel set screw flanges. Gasket and lubricants for set screw flanges, in accordance with mechanical-joint gaskets specified in AWWA C111/A21.11.

d. Insulating Joints: Designed to prevent metal-to-metal contact at the

joint between adjacent sections of piping. Provide flanged type joint with insulating gasket, insulating bolt sleeves, and insulating washers. Provide full face dielectric type gaskets, as recommended in the Appendix to AWWA C115/A21.15. Bolts and nuts, as recommended in the Appendix to AWWA C115/A21.15.

e. Sleeve-Type Mechanical Coupled Joints: As specified in the paragraph SLEEVE-TYPE MECHANICAL COUPLINGS.

2.1.1.2 Plastic Piping

2.1.1.2.1 PVC Piping

2.1.1.2.1.1 PVC Piping

AWWA C900 plain end or gasket bell end pipe meeting or exceeding ASTM D1784 cell class 12454, with a minimum Pressure Class 150 (DR27.5), , , , with ductile iron outside diameter (DIOD).

2.1.1.2.1.2 Fittings for PVC Pipe

Gray iron or ductile iron fittings, AWWA C110/A21.10 or AWWA C153/A21.53, with cement-mortar lining for fittings, AWWA C104/A21.4, standard thickness. Fittings with push-on joint ends are to conform to the same requirements as fittings with mechanical-joint ends, except for the factory modified bell design compatible for use with PVC pipe as specified.

2.1.1.2.1.3 Joints and Jointing Material for PVC

a. Push-on joints: Use jointing material in accordance with ASTM D3139 and AWWA C111/A21.11 between pipes, pipes and metal fittings, valves, and other accessories or compression-type joints/mechanical joints. Provide each joint connection with an elastomeric gasket compatible for the bell or coupling used. Gaskets for push-on joints for pipe, ASTM F477. Gaskets for push-on joints and compression-type joints/mechanical joints for joint connections between pipe and metal fittings, valves, and other accessories, AWWA C111/A21.11, respectively, for push-on joints and mechanical joints.

b. Mechanical Joint: Use mechanically coupled joints having a sleeve-type mechanical coupling, as specified in the paragraph SLEEVE-TYPE MECHANICAL COUPLINGS, as an optional jointing method for plain-end PVC pipe, subject to the limitations specified for mechanically coupled joints using a sleeve-type mechanical coupling as specified for compression-type joints in ASTM D3139. Provide jointing material in accordance with AWWA C111/A21.11 between pipe and sleeve-type mechanical couplings.

2.1.1.2.2 PVC Piping for Service Lines

2.1.1.2.2.1 Pipe and Fittings

Provide ASTM D1784 cell class 12454 pipe and fittings of the same PVC material.

a. ASTM D1785, Schedule 40 with ASTM D2466 Schedule 40 or ASTM D2467 Schedule 80 fittings.

b. ASTM D2241 pipe and fittings with SDR as necessary to provide 150 psi

minimum pressure rating with ASTM D2466 Schedule 40 or ASTM D2467 Schedule 80 fittings.

2.1.1.2.2.2 Joints and Connections

Fittings may be joined by the solvent-cement method or threading.

2.1.1.2.2.3 Solvent Joining

Provide solvent joints in accordance with ASTM D2855.

2.1.1.2.3 Polyethylene (PE) Pipe

AWWA C906, ASTM D3035, PE4710, material designation codeCC2 with a minimum Pressure Class 200 (DR11) with ductile iron outside diameter (DIOD).

2.1.1.2.3.1 Fittings For PE Pipe

AWWA C906, AWWA M55, ASTM D3035, molded and manufactured to comply with ASTM F714.

2.1.1.2.3.2 Joints and Jointing Materials

Mechanical Joint: AWWA C111/A21.11 DIOD Mechanical joint adapter and gaskets for mechanical joints for joint connections between pipe and metal fittings, valves, and other accessories.

2.1.1.3 Copper Pipe For Service Lines

2.1.1.3.1 Copper Tubing and Associated Fittings

Provide ASTM B88, Type K copper tubing. Provide AWWA C800 fittings. AWWA C800 includes ASME B1.20.3, ASME B1.20.1, ASME B16.18 solder-type joint fittings.

2.1.2 Valves

2.1.2.1 Gate Valves 3 Inch Size and Larger on Buried Piping

AWWA C500, AWWA C509, AWWA C515, or UL 262 and:

a. AWWA C500: nonrising stem type with double-disc gate and mechanical-joint ends or push-on joint ends compatible for the adjoining pipe

b. AWWA C509 or AWWA C515: nonrising stem type with mechanical-joint ends or resilient-seated gate valves 3 to 12 inches in size

c. UL 262: inside-screw type with operating nut, double-disc or split-wedge type gate, designed for a hydraulic working pressure of 175 175 psi, and have mechanical-joint ends or push-on joint ends as appropriate for the pipe to which it is joined.

Match materials for UL 262 gate valves to the reference standards specified in AWWA C500. Gate valves open by counterclockwise rotation of the valve stem. Stuffing boxes have 0-ring stem seals. Stuffing boxes are bolted and constructed so as to permit easy removal of parts for repair. Use gate valves with special ends for connection to cement piping or sleeve-type mechanical coupling in lieu of mechanical-joint ends and

push-on joint ends. Provide valve ends and gaskets for connection to cement piping or to sleeve-type mechanical couplings that conform to the requirements specified for the joint or coupling.Where an indicator post is shown, provide an indicator post flange; indicator post flange for AWWA C500, AWWA C509, or AWWA C515 valve is to conform to the requirements of UL 262. Provide all valves from one manufacturer.

2.1.2.2 Gate Valves 3 Inch Size and Larger and

AWWA C500, AWWA C509, AWWA C515, or UL 262 and:

a. AWWA C500: outside-screw-and-yoke rising-stem type with double-disc gates and flanged ends

b. AWWA C509 or AWWA C515: outside-screw-and-yoke rising-stem type with flanged ends

c. UL 262: outside-screw-and-yoke type, with double-disc or split-wedge type gate and flanged ends, and designed for a hydraulic working pressure of 175 psi

Match materials for UL 262 gate valves to the reference standards specified in AWWA C500. Provide gate valves with handwheels that open by counterclockwise rotation of the valve stem. Bolt and construct stuffing boxes so as to permit easy removal of parts for repair. Provide all valves from one manufacturer.

2.1.2.3 Check Valves

Swing-check type, AWWA C508 or UL 312 and:

a. AWWA C508: Iron or steel body and cover and flanged ends

b. UL 312: Cast iron or steel body and cover, flanged ends, and designed for a minimum working pressure of 150 psi.

Materials for UL 312 check valves are to match the reference standards specified in AWWA C508. Provide check valves with a clear port opening. Provide all check valves from one manufacturer.

2.1.2.4 Rubber-Seated Butterfly Valves

Provide rubber-seated butterfly valves and wafer type valves that match the performance requirements of AWWA C504. Wafer type valves not meeting laying length requirements are acceptable if supplied and installed with a spacer, providing the specified laying length. Meet all tests required by AWWA C504. Flanged-end valves are required in a pit. Provide a union or sleeve-type coupling in the pit to permit removal. Direct-bury mechanical-end valves 3 through 10 inches in diameter. Provide a valve box, means for manual operation, and an adjacent pipe joint to facilitate valve removal. Provide valve operators that restrict closing to a rate requiring approximately 60 seconds, from fully open to fully closed.

2.1.2.5 Pressure Reducing Valves

Maintain a constant downstream pressure regardless of fluctuations in demand. Using pressure reducing valves capable of providing 150 psi operating pressure on the inlet side, with outlet pressure set for 250 psi. Provide hydraulically-operated, pilot controlled, globe or angle type

valves that are capable of being actuated either by diaphragm or piston. Provide diaphragm-operated, adjustable, spring-loaded type pilot controls made of lead-free bronze with stainless steel working parts, designed to permit flow when controlling pressure exceeds the spring setting. Construct the bodies of bronze, cast iron or cast steel with lead-free bronze trim; the valve stem of stainless steel; the seat of lead-free bronze; and the valve discs and diaphragms of synthetic rubber. Provide flanged ends.

2.1.2.6 Air Release, Air/Vacuum, and Combination Air Valves

Provide AWWA C512 air release , air vacuum and combination air valves that release air and prevent the formation of a vacuum. Provide valves with an iron body, lead-free bronze trim and stainless steel float that automatically releases air when the lines are being filled with water and admits air into the line when water is being withdrawn in excess of the inflow.

2.1.2.7 Water Service Valves

2.1.2.7.1 Gate Valves Smaller than 3 Inch in Size on Buried Piping

Gate valves smaller than 3 inch size on Buried Piping MSS SP-80, Class 150, solid wedge, nonrising stem, with flanged or threaded end connections, a union on one side of the valve, and a handwheel operator.

2.1.2.7.2 Gate Valves Smaller Than 3 Inch Size in Valve Pits

MSS SP-80, Class 150, solid wedge, inside screw, rising stem. Provide valves with flanged or threaded end connections, a union on one side of the valve, and a handwheel operator.

2.1.2.7.3 Check Valves Smaller than 2 Inch in Size

Provide check valves with a minimum working pressure of 150 psi or as indicated with a clear waterway equal to the full nominal diameter of the valve. Valves open to permit flow when inlet pressure is greater than the discharge pressure, and close tightly to prevent return flow when discharge pressure exceeds inlet pressure. Cast the size of the valve, working pressure, manufacturer's name, initials, or trademark on the body of each valve.

Provide valves for screwed fittings, made of lead-free bronze and in conformance with MSS SP-80, Class 150, Types 3 and 4 compatible for the application.

2.1.2.8 Valve Boxes

Provide a valve box for each gate valve on buried piping. Construct adjustable valve boxes manufactured from cast iron of a size compatible for the valve on which it is used. Provide cast iron valve boxes with a minimum cover and wall thickness of 3/16 inch and conforming to ASTM A48/A48M, Class 35B. Coat the cast-iron box with a heavy coat of bituminous paint. Cast the word "WATER" on the lid. The minimum diameter of the shaft of the box is 5 1/4 inches. P

2.1.2.9 Valve Pits

Construct the valve pits at locations indicated or as required above and

in accordance with the details shown.

2.1.3 Blowoff Valve Assemblies

Provide blowoff valve assemblies complete with all pipe, fittings, valve, valve box, riser box and lid, riser extension, discharge fitting and other materials required to connect to the water main. Provide blow off valve assemblies 4 inches or larger with AWWA C110/A21.10 or AWWA C153/A21.53 fittings. Provide a blowoff valve assembly with a removable riser.

2.1.4 Fire Hydrants And Hose Houses

2.1.4.1 Fire Hydrants

Provide fire hydrants where indicated. Paint fire hydrants with at least one coat of primer and two coats of enamel paint. Paint barrel and bonnet colors in accordance with UFC 3-600-01. Stencil fire hydrant number and main size on the fire hydrant barrel using black stencil paint.

2.1.4.1.1 Dry-Barrel Type Fire Hydrants

Provide Dry-barrel type fire hydrants, AWWA C502 or UL 246, "Base Valve" with 6 inch inlet, 5 1/4 inch valve opening, one 4 1/2 inch pumper connection, and two 2 1/2 inch hose connections. Provide

Provide mechanical-joint or push-on joint end inlet , except where flanged end is indicated; with end matching requirements as specified in AWWA C502 or AWWA C503 or UL 246 for size and shape of operating nut, cap nuts, and threads on hose and pumper connections. Provide fire hydrants with frangible sections as mentioned in AWWA C502 . Provide fire hydrant with special couplings joining upper and lower sections of fire hydrant barrel that break from a force imposed by a moving vehicle.

2.1.4.1.2 Flush-Type Fire Hydrants

Provide flush-type fire hydrants that conform to the applicable requirements of AWWA C502, except that they are designed to permit placement of fire hydrant below surface of pavement. Provide 6 inch inlet, 4 1/4 inch minimum valve opening, one 4 1/2 inch pumper connection, and one 2 1/2 inch hose connection that have readily accessible hose and pumper connections and operating nuts enclosed in a cast iron box with a cast-iron cover set flush with the pavement. Provide flush lifting cover handle. Inlet has either mechanical-joint or push-on joint end , except where flanged end is indicated. Size and shape of operating nut and cap nuts and threads on hose and pumper connections as specified in AWWA C502 .

2.1.4.2 Fire Hydrant Hose Houses

Provide hose houses matching the requirements of NFPA 24 at each fire hydrant indicated on the drawings to have a fire hydrant hose house.

2.1.4.2.1 Additional Equipment

Provide the following equipment, in addition to that listed in NFPA 24, Hose Houses and Equipment, with each hose house:

a. 200 feet of 2-1/2 inch woven jacketed, rubber lined hose matching the requirements of NFPA 1961 with a minimum service test pressure of 300

psi; 100 feet of 1-1/2 inch woven jacketed, rubber lined hose matching the requirements of NFPA 1961 with a minimum service test pressure of 300 psi;

b. One gated 2-1/2 by 1-1/2 by 1-1/2 inch wye;

c. One playpipe for 2-1/2 inch hose with 1 inch shutoff nozzle tip;

d. One playpipe for 1-1/2 inch hose with 1/2 inch shutoff nozzle or combination nozzle;

e. Two adapter fittings, 2-1/2 to 1-1/2 inch;

f. Two spanners for 1-1/2 inch hose.

2.1.5 Meters

Submit certificates certifying all required and recommended tests set forth in the referenced standard and AWWA M6 have been performed and comply with all applicable requirements of the referenced standard and AWWA M6 within the past three years. Include certification that each meter has been tested for accuracy of registration and that each meter complies with the accuracy and capacity requirements of the referenced standard when tested in accordance with AWWA M6.

Include a register with all meters whether they are or are not connected to a remote reading system.

2.1.5.1 Register

Provide AWWA C700 straight-reading register supplied by the meter manufacturer. Equip register with U.S. gallons readings. Use a direct reading remote register designed in accordance with AWWA C706.

2.1.5.2 Strainers

Provide AWWA C701 strainer recommended and supplied by the meter manufacturer. Provide strainer of the same material as the meter body (i.e., bronze, ductile, or stainless).

2.1.5.3 Meter Connections

Provide connections compatible with the type of pipe and conditions encountered.

2.1.5.4 Meter Boxes

Provide meter boxes of sufficient size to completely enclose the meter and shutoff valve or service stop and in accordance with the details shown on the drawings. Provide a meter boxes or vaults with a height equal to the distance from invert of the service line to finished grade at the meter location.

2.1.5.4.1 Cast Iron

Provide ASTM A48/A48M, Class 25 cast iron meter box and lid. Provide a round lid having the word "WATER" cast on the top surface.

2.1.6 Backflow Preventers

The particular make, model, and size of backflow preventers to be installed must be included in the latest edition of the List of Approved Backflow Prevention Assemblies issued by the FCCCHR List and be accompanied by a backflow certificate of full approval from FCCCHR List.]Select materials for piping, strainers, and valves used in assembly installation that are galvanically compatible. Materials joined, connected, or otherwise in contact are to have no greater than 0.25 V difference on the Anodic Index, unless separated by a dielectric type union or fitting.

2.1.7 Disinfection

Chlorinating materials are to conform to: Chlorine, Liquid: AWWA B301; Hypochlorite, Calcium and Sodium: AWWA B300.

2.2 ACCESSORIES

2.2.1 Pipe Restraint

2.2.1.1 Thrust Blocks

Use ASTM C94/C94M concrete having a minimum compressive strength of 2,500 psi at 28 days or use concrete of a mix not leaner than one part cement, two and one half parts sand, and five parts gravel, having the same minimum compressive strength.

2.2.1.2 Precast Thrust Blocks

Provide precast concrete thrust blocks.

2.2.1.3 Joint Restraint

Provide restrained joints in accordance with NFPA 24, Chapter 10 and in accordance with ASTM F1674.

Provide mechanical joint restraint .

2.2.2 Tapping Sleeves

Provide cast gray, ductile, malleable iron or stainless steel, split-sleeve type tapping sleeves of the sizes indicated for connection to existing main with flanged or grooved outlet, and with bolts, follower rings and gaskets on each end of the sleeve. Utilize similar metals for bolts, nuts, and washers to minimize the possibility of galvanic corrosion. Provide dielectric gaskets where dissimilar metals adjoin. Provide a tapping sleeve assembly with a maximum working pressure of 150 psi. Provide bolts with square heads and hexagonal nuts. Longitudinal gaskets and mechanical joints with gaskets as recommended by the manufacturer of the sleeve. When using grooved mechanical tee, utilize an upper housing with full locating collar for rigid positioning which engages a machine-cut hole in pipe, encasing an elastomeric gasket which conforms to the pipe outside diameter around the hole and a lower housing with positioning lugs, secured together during assembly by nuts and bolts as specified, pre-torqued to 50 foot-pound.

2.2.3 Sleeve-Type Mechanical Couplings

Use couplings to join plain-end piping by compression of a ring gasket at

each end of the adjoining pipe sections. The coupling consists of one middle ring flared or beveled at each end to provide a gasket seat; two follower rings; two resilient tapered rubber gaskets; and bolts and nuts to draw the follower rings toward each other to compress the gaskets. Provide true circular middle ring and the follower rings sections free from irregularities, flat spots, and surface defects; provide for confinement and compression of the gaskets. For ductile iron and PVC pipe, the middle ring is cast-iron . Malleable and ductile iron are to meet the requirements of ASTM A47/A47M and ASTM A536, respectively. Use gaskets for resistance to set after installation and to meet the requirements specified for gaskets for mechanical joint in AWWA C111/A21.11. Provide track-head type bolts ASTM A307, Grade A, with nuts, ASTM A563, Grade A; or round-head square-neck type bolts, ASME B18.5.2.1M and ASME B18.5.2.2M with hex nuts, ASME B18.2.2. Shape bolt holes in follower rings to hold fast to the necks of the bolts used. Do not use mechanically coupled joints using a sleeve-type mechanical coupling as an optional method of jointing except where pipeline is adequately anchored to resist tension pull across the joint. Provide a tight flexible joint with mechanical couplings under reasonable conditions, such as pipe movements caused by expansion, contraction, slight settling or shifting in the ground, minor variations in trench gradients, and traffic vibrations. Match coupling strength to that of the adjoining pipeline.

2.2.4 Insulating Joints

Provide a rubber-gasketed insulating joint or dielectric coupling between pipe of dissimilar metals which will effectively prevent metal-to-metal contact between adjacent sections of piping.

2.2.5 Dielectric Fittings

Install dielectric fittings between threaded ferrous and nonferrous metallic pipe, fittings and valves, except where corporation stops join mains to prevent metal-to-metal contact of dissimilar metallic piping elements and compatible with the indicated working pressure.

2.2.6 Tracer Wire for Nonmetallic Piping

Provide a continuous bare copper or aluminum wire not less than 0.10 inch in diameter in sufficient length over each separate run of nonmetallic pipe.

2.2.7 Water Service Line Appurtenances

2.2.7.1 Corporation Stops

Ground key type; lead-free bronze, ASTM B61 or ASTM B62; compatible with the working pressure of the system and solder-joint, or flared tube compression type joint. Threaded ends for inlet and outlet of corporation stops, AWWA C800; coupling nut for connection to flared copper tubing, ASME B16.26.

2.2.7.2 Curb or Service Stops

Ground key, round way, inverted key type; made of lead-free bronze, ASTM B61or ASTM B62; and compatible with the working pressure of the system. Provide compatible ends for connection to the service piping. Cast an arrow into body of the curb or service stop indicating direction of flow.

2.2.7.3 Service Clamps

Provide single or double flattened strap type service clamps used for repairing damaged cast-iron, steel or PVC pipe with a pressure rating not less than that of the pipe being repaired. Provide clamps with a galvanized malleable-iron body with cadmium plated straps and nuts and a rubber gasket cemented to the body.

2.2.7.4 Goosenecks

Manufacture goosenecks from Type K copper tubing; provide joint ends for goosenecks compatible with connecting to corporation stop and service line. Where multiple gooseneck connections are required for an individual service, connect goosenecks to the service line through a compatible lead-free brass or bronze branch connection; the total clear area of the branches to be at least equal to the clear area of the service line.

2.2.7.5 Curb Boxes

Provide a curb box for each curb or service stop manufactured from cast iron, size capable of containing the stop where it is used. Provide a round head. Cast the word "WATER" on the lid. Factory coat the box with a heavy coat of bituminous paint.

PART 3 EXECUTION

3.1 PREPARATION

3.1.1 Connections to Existing System

Perform all connections to the existing water system in the presence of the Contracting Officer.

3.1.2 Operation of Existing Valves

Do not operate valves within or directly connected to the existing water system unless expressly directed to do so by the Contracting Officer.

3.1.3 Earthwork

Perform earthwork operations in accordance with Section 31 23 00.00 20 EXCAVATION AND FILL.

3.2 INSTALLATION

Install all materials in accordance with the applicable reference standard, manufacturers instructions and as indicated herein.

3.2.1 Piping

3.2.1.1 General Requirements

Install pipe, fittings, joints and couplings in accordance with the applicable referenced standard, the manufacturer's instructions and as specified herein.

3.2.1.1.1 Termination of Water Lines

Terminate the work covered by this section at a point approximately 5 feet from the building, unless otherwise indicated.

Do not lay water lines in the same trench with gas lines, fuel lines, electric wiring, or any other utility. Do not install copper tubing in the same trench with ferrous piping materials. Where nonferrous metallic pipe (i.e., copper tubing) crosses any ferrous piping, provide a minimum vertical separation of 12 inches between pipes.

3.2.1.1.2 Pipe Laying and Jointing

Remove fins and burrs from pipe and fittings. Before placing in position, clean pipe, fittings, valves, and accessories, and maintain in a clean condition. Provide proper facilities for lowering sections of pipe into trenches. Under no circumstances is it permissible to drop or dump pipe, fittings, valves, or other water line material into trenches. Cut pipe cleanly, squarely, and accurately to the length established at the site and work into place without springing or forcing. Replace a pipe or fitting that does not allow sufficient space for installation of jointing material. Blocking or wedging between bells and spigots is not permitted. Lay bell-and-spigot pipe with the bell end pointing in the direction of laying. Grade the pipeline in straight lines; avoid the formation of dips and low points. Support pipe at the design elevation and grade. Secure firm, uniform support. Wood support blocking is not permitted. Lay pipe so that the full length of each section of pipe and each fitting rests solidly on the pipe bedding; excavate recesses to accommodate bells, joints, and couplings. Provide anchors and supports for fastening work into place. Make provision for expansion and contraction of pipelines. Keep trenches free of water until joints have been assembled. At the end of each work day, close open ends of pipe temporarily with wood blocks or bulkheads. Do not lay pipe when conditions of trench or weather prevent installation.

3.2.1.1.3 Tracer Wire

Install a continuous length of tracer wire for the full length of each run of nonmetallic pipe. Attach wire to top of pipe in such manner that it will not be displaced during construction operations.

3.2.1.1.4 Connections to Existing Water Lines

Make connections to existing water lines after coordination with the facility and with a minimum interruption of service on the existing line. Make connections to existing lines under pressure in accordance with the recommended procedures of the manufacturer of the pipe being tapped and as indicated.

3.2.1.1.5 Sewer Manholes

No water piping is to pass through or come in contact with any part of a sewer manhole.

3.2.1.1.6 Water Piping Parallel With Sewer Piping

a. Normal Conditions: Lay water piping at least 10 feet horizontally from sewer or sewer manhole whenever possible. Measure the distance from outside edge to outside edge of pipe or outside edge of manhole. When local conditions prevent horizontal separation install water piping in a separate trench with the bottom of the water piping at least 18

inches above the top of the sewer piping.

b. Unusual Conditions: When local conditions prevent vertical separation, construct sewer piping of AWWA compliant ductile iron water piping and perform hydrostatic sewer test, without leakage, prior to backfilling. When local conditions prevent vertical separation, test the sewer manhole in place to ensure watertight construction.

3.2.1.1.7 Water Piping Crossing Sewer Piping

a. Normal Conditions: Provide a separation of at least 18 inches between the bottom of the water piping and the top of the sewer piping in cases where water piping crosses above sewer piping.

b. Unusual Conditions: When local conditions prevent a vertical separation described above, construct sewer piping passing over or under water piping of AWWA compliant ductile iron water piping and perform hydrostatic sewer test, without leakage, prior to backfilling. Construct sewer crossing with a minimum 20 feet length of the AWWA compliant ductile iron water piping, centered at the point of the crossing so that joints are equidistant and as far as possible from the water piping. Protect water piping passing under sewer piping by providing a vertical separation of at least 18 inches between the bottom of the sewer piping and the top of the water piping; adequate structural support for the sewer piping to prevent excessive deflection of the joints and the settling on or damage to the water piping.

3.2.1.1.8 Penetrations

Provide ductile-iron or Schedule 40 steel wall sleeves for pipe passing through walls of valve pits and structures. Fill annular space between walls and sleeves with rich cement mortar. Fill annular space between pipe and sleeves with mastic.

3.2.1.1.9 Flanged Pipe

Only install flanged pipe aboveground or with the flanges in valve pits.

3.2.1.2 Ductile-Iron Piping

Unless otherwise specified, install pipe and fittings in accordance with the paragraph GENERAL REQUIREMENTS and with the requirements of AWWA C600 for pipe installation, joint assembly, valve-and-fitting installation, and thrust restraint.

a. Jointing: Make push-on joints with the gaskets and lubricant specified for this type joint; assemble in accordance with the applicable requirements of AWWA C600 and AWWA M41 for joint assembly. Make mechanical joints with the gaskets, glands, bolts, and nuts specified for this type joint; assemble in accordance with the applicable requirements of AWWA C600 and AWWA M41 for joint assembly and the recommendations of Appendix A to AWWA C111/A21.11. Make flanged joints with the gaskets, bolts, and nuts specified for this type joint. Make flanged joints up tight; avoid undue strain on flanges, fittings, valves, and other equipment and accessories. Align bolt holes for each flanged joint. Use full size bolts for the bolt holes; use of undersized bolts will not be permitted. Do not allow adjoining flange faces to be out of parallel to such degree that the

flanged joint cannot be made watertight without overstraining the flange. When flanged pipe or fitting has dimensions that do not allow the making of a flanged joint as specified, replace it. Use set screw flanges to make flanged joints where conditions prevent the use of full-length flanged pipe and assemble in accordance with the recommendations of the set screw flange manufacturer. During installation of set screw gasket provide for confinement and compression of gasket when joint to adjoining flange is made. Assemble joints made with sleeve-type mechanical couplings in accordance with the recommendations of the coupling manufacturer. Make insulating joints with the gaskets, sleeves, washers, bolts, and nuts previously specified for this type joint. Assemble insulating joints as specified for flanged joints, except that bolts with insulating sleeves are to be full size for the bolt holes. Ensure that there is no metal-to-metal contact between dissimilar metals after the joint has been assembled.

b. Allowable Deflection: Follow AWWA C600 and AWWA M41 for the maximum allowable deflection. If the alignment requires deflection in excess of the above limitations, provide special bends or a sufficient number of shorter lengths of pipe to achieve angular deflections within the limit set forth.

3.2.1.3 PVC Water Main Pipe

Unless otherwise specified, install pipe and fittings in accordance with the paragraph GENERAL REQUIREMENTS and with the requirements of AWWA C605 for laying of pipe, joining PVC pipe to fittings and accessories, setting of fire hydrants, valves, and fittings; and with the recommendations for pipe joint assembly and appurtenance installation in AWWA M23, Chapter 7, "Installation."

a. Jointing: Make push-on joints with the elastomeric gaskets specified for this type joint, using either elastomeric-gasket bell-end pipe or elastomeric-gasket couplings. For pipe-to-pipe push-on joint connections, use only pipe with push-on joint ends having factory-made bevel; for push-on joint connections to metal fittings, valves, and other accessories, cut spigot end of pipe off square and re-bevel pipe end to a bevel approximately the same as that on ductile-iron pipe used for the same type of joint. Use a lubricant recommended by the pipe manufacturer for push-on joints. Assemble push-on joints for pipe-to-pipe joint connections in accordance with the requirements of AWWA C605 for laying the pipe and the recommendations in AWWA M23, Chapter 7, "Installation," for pipe joint assembly. Assemble push-on joints for connection to fittings, valves, and other accessories in accordance with the requirements of AWWA C605 for joining PVC pipe to fittings and accessories and with the requirements of AWWA C600 for joint assembly. Make compression-type joints/mechanical joints with the gaskets, glands, bolts, nuts, and internal stiffeners previously specified for this type joint; assemble in accordance with the requirements of AWWA C605 for joining PVC pipe to fittings and accessories, with the requirements of AWWA C600 for joint assembly, and with the recommendations of Appendix A to AWWA C111/A21.11. Cut off spigot end of pipe for compression-type joint/mechanical-joint connections and do not re-bevel. Assemble joints made with sleeve-type mechanical couplings in accordance with the recommendations of the coupling manufacturer using internal stiffeners as previously specified for compression-type joints.

b. Joint Offset: Construct joint offset in accordance AWWA C605. Do not exceed the minimum longitudinal bending as indicated by AWWA C605.

c. Fittings: Install in accordance with AWWA C605.

3.2.1.4 Polyethylene (PE) Piping

Install PE pipes in accordance with AWWA M55 and ASTM D2774.

3.2.1.5 Metallic Piping for Service Lines

Install pipe and fittings in accordance with the paragraph GENERAL REQUIREMENTS and with the applicable requirements of AWWA C600 for pipe installation, unless otherwise specified.

3.2.1.5.1 Screwed Joints

Make screwed joints up tight with a stiff mixture of graphite and oil, inert filler and oil, or graphite compound; apply to male threads only or with PTFE Tape, for use with threaded pipe. Threads are to be full cut; do not leave more than three threads on the pipe exposed after assembling the joint.

3.2.1.5.2 Joints for Copper Tubing

Cut copper tubing with square ends; remove fins and burrs. Replace dented, gouged, or otherwise damaged tubing with undamaged tubing. Make solder joints using ASTM B32, 95-5 tin-antimony or Grade Sn96 solder. Use solder and flux containing less than 0.2 percent lead. Before making joint, clean ends of tubing and inside of fitting or coupling with wire brush or abrasive. Apply a rosin flux to the tubing end and on recess inside of fitting or coupling. Insert tubing end into fitting or coupling for the full depth of the recess and solder. For compression joints on flared tubing, insert tubing through the coupling nut and flare tubing.

3.2.1.5.3 Flanged Joints

Make flanged joints up tight, avoid undue strain on flanges, valves, fittings, and accessories.

3.2.1.6 Plastic Service Piping

Install pipe and fittings in accordance with the paragraph GENERAL REQUIREMENTS and with the applicable requirements of ASTM D2774 and ASTM D2855, unless otherwise specified. Handle solvent cements used to join plastic piping in accordance with ASTM F402.

3.2.1.6.1 Jointing

Make solvent-cemented joints for PVC piping using the solvent cement previously specified for this material; assemble joints in accordance with ASTM D2855. Make plastic pipe joints to other pipe materials in accordance with the recommendations of the plastic pipe manufacturer.

3.2.1.6.2 Plastic Pipe Connections to Appurtenances

Connect plastic service lines to corporation stops and gate valves in accordance with the recommendations of the plastic pipe manufacturer.

3.2.1.7 Trenchless Piping

3.2.1.7.1 Butt Fusion

Fusible pipe will be fused by qualified fusion technicians, as required by manufacturer of the fusion equipment. Record and log each fusion joint by an electronic monitoring device (data logger) connected to the fusion machine. Log fusion data and create Post-Construction Fusion Report with software specifically developed for the pipe material being fused. Software must record the parameters required by the fusion equipment manufacturer and these specifications. Manual log data not logged by the data logger and be included in the Post-Construction Fusion Report. Assemble fusible PVC and PE pipe lengths in the field with butt-fused joints. Follow the manufacturer's fusion equipment procedures.

a. Install butt fused PE Pipe in accordance with ASTM F1962.

b. For butt fused PVC Pipe provide joints meeting the requirements of ASTM F1674.

3.2.1.7.2 Post-Construction Fusion Report

Include the following data for each fusible connection in the report:

a. Pipe Size and Thickness
b. Machine Size
c. Fusion Technician Identification
d. Job Identification
e. Fusion Joint Number
f. Fusion, Heating, and Drag Pressure Settings
g. Heat Plate Temperature
h. Time Stamp
i. Heating and Cool Down Time of Fusion
j. Ambient Temperature

3.2.1.7.3 Installation Ductile Iron Ball and Socket Joint

Install pipe and fittings in accordance with AWWA C600 and AWWA M41 for pipe installation, joint assembly, and thrust restraint.

a. Allowable Deflection: Meet the applicable requirements of AWWA C600, AWWA M41 and in accordance with pipe manufacturer's instructions for the maximum allowable deflection.

b. Exterior Protection: Completely encase buried ductile iron pipelines using Method A or B, with polyethylene film, in accordance with AWWA C105/A21.5.

3.2.1.8 Fire Protection Service Lines for Sprinkler Supplies

Connect water service lines used to supply building sprinkler systems for fire protection to the water main in accordance with NFPA 24.

3.2.1.9 Water Service Piping

3.2.1.9.1 Location

Connect water service piping to the building service where the building service has been installed. Where building service has not been

installed, terminate water service lines approximately 5 feet from the building line at the points indicated; close such water service lines with plugs or caps.

3.2.1.9.2 Water Service Line Connections to Water Mains

Connect water service lines to ductile-iron water mains in accordance with AWWA C600 for service taps. Connect water service lines to PVC water mains in accordance with UBPPA UNI-PUB-08 and the recommendations of AWWA M23, Chapter 9, "Service Connections."

3.2.2 Meters

Install meters and meter boxes at the locations shown on the drawings. Center meters in the boxes to allow for reading and ease of removal or maintenance. Set top of box or vault at finished grade.

3.2.3 Backflow Preventers

Install backflow preventers of type, size, and capacity indicated a minimum of 12 inch and a maximum of 36 inch above concrete base. Include valves and test cocks. Install according to the manufacturers requirements and the requirements of plumbing and health department and authorities having jurisdiction. Support NPS 2 1/2 inch and larger backflow preventers, valves, and piping near floor with 12 inch minimum air gap, and on concrete piers or steel pipe supports. Do not install backflow preventers that have a relief drain in vault or in other spaces subject to flooding. Do not install by-pass piping around backflow preventers.

3.2.4 Disinfection

Disinfection of systems supplying non-potable water is not required.

Prior to disinfection, provide disinfection procedures, proposed neutralization and disposal methods of waste water from disinfection as part of the disinfection submittal. Disinfect new water piping and existing water piping affected by Contractor's operations in accordance with AWWA C651. Disinfect new water piping using the AWWA C651 continuous-feed method of chlorination. Ensure a free chlorine residual of not less than 10 parts per million after 24 hour holding period and prior to performing bacteriological tests.

3.2.5 Flushing

Perform bacteriological tests prior to flushing. Flush solution from the systems with domestic water until maximum residual chlorine content is within the range of 0.2 to 0.5 parts per million, the residual chlorine content of the distribution system, or acceptable for domestic use. Use AWWA C655 neutralizing chemicals.

3.2.6 Pipe Restraint

3.2.6.1 Concrete Thrust Blocks

Install concrete thrust blocks where indicated.

3.2.6.2 Restrained Joints

Install restrained joints in accordance with the manufacturer's instructions NFPA 24 where indicated. For metal harness use tie rods and clamps as shown in NFPA 24. Provide metal harness fabricated by the pipe manufacturer and furnished with the pipe.

3.2.7 Valves

3.2.7.1 Gate Valves

Install gate valves, AWWA C500 and UL 262, in accordance with the requirements of AWWA C600 for valve-and-fitting installation and with the recommendations of the Appendix ("Installation, Operation, and Maintenance of Gate Valves") to AWWA C500. Install gate valves, AWWA C509 or AWWA C515, in accordance with the requirements of AWWA C600 for valve-and-fitting installation and with the recommendations of the Appendix ("Installation, Operation, and Maintenance of Gate Valves") to AWWA C509 or AWWA C515. Install gate valves on PVC water mains in accordance with the recommendations for appurtenance installation in AWWA M23, Chapter 7, "Installation." Make and assemble joints to gate valves as specified for making and assembling the same type joints between pipe and fittings.

3.2.7.2 Check Valves

Install check valves in accordance with the applicable requirements of AWWA C600 for valve-and-fitting installation , except as otherwise indicated. Make and assemble joints to check valves as specified for making and assembling the same type joints between pipe and fittings.

3.2.7.3 Air Release, Air/Vacuum, and Combination Air Valves

Install pressure vacuum assemblies of type, size, and capacity indicated. Include valves and test cocks. Install according to the requirements of plumbing and health department and authorities having jurisdiction. Do not install pressure vacuum breaker assemblies in vault or other space subject to flooding.

3.2.8 Blowoff Valve Assemblies

Install blowoff valve assemblies as indicated on the drawings or in accordance with the manufactures recommendations. Install discharge fitting on the end of riser pipe to direct the flow of water so as to minimize damage to surrounding areas.

3.2.9 Fire Hydrants

Install fire hydrants in accordance with AWWA C600 for fire hydrant installation and as indicated. Make and assemble joints as specified for making and assembling the same type joints between pipe and fittings. Provide metal harness as specified under pipe anchorage requirements for the respective pipeline material to which fire hydrant is attached. Install fire hydrants with the 4 1/2 inch connections facing the adjacent paved surface. If there are two paved adjacent surfaces, install fire hydrants with the 4 1/2 inch connection facing the paved surface where the connecting main is located.

3.3 FIELD QUALITY CONTROL

3.3.1 Tests

Notify the Contracting Officer a minimum of five days in advance of hydrostatic testing. Coordinate the proposed method for disposal of waste water from hydrostatic testing. Perform field tests, and provide labor, equipment, and incidentals required for testing, except that water needed for field tests will be furnished as set forth in paragraph AVAILABILITY AND USE OF UTILITY SERVICES in Section 01 50 00 TEMPORARY CONSTRUCTION FACILITIES AND CONTROLS. Provide documentation that all items of work have been constructed in accordance with the Contract documents.

3.3.1.1 Hydrostatic Test

Test the water system in accordance with the applicable AWWA standard specified below. Where water mains provide fire service, test in accordance with the special testing requirements given in the paragraph SPECIAL TESTING REQUIREMENTS FOR FIRE SERVICE. Test ductile-iron water mains in accordance with the requirements of AWWA C600 for hydrostatic testing. The amount of leakage on ductile-iron pipelines with mechanical-joints or push-on joints is not to exceed the amounts given in AWWA C600; no leakage will be allowed at joints made by any other methods. Test PVCplastic water systems made with PVC pipe in accordance with the requirements of AWWA C605 for pressure and leakage tests. The amount of leakage on pipelines made of PVC water main pipe is not to exceed the amounts given in AWWA C605, except that at joints made with sleeve-type mechanical couplings, no leakage will be allowed. Test water service lines in accordance with requirements of AWWA C600 for hydrostatic testing. No leakage will be allowed at copper pipe joints, copper tubing joints (soldered, compression type, brazed), plastic pipe joints, flanged joints, . Do not backfill utility trench or begin testing on any section of a pipeline where concrete thrust blocks have been provided until at least 7 days after placing of the concrete.

3.3.1.2 Hydrostatic Sewer Test

The hydrostatic pressure sewer test will be performed in accordance with the applicable AWWA standard for the piping material or AWWA C600.

3.3.1.3 Leakage Test

For leakage test, use a hydrostatic pressure not less than the maximum working pressure of the system. Leakage test may be performed at the same time and at the same test pressure as the pressure test.

For PE perform leak testing in accordance with ASTM F2164.

3.3.1.4 Bacteriological Testing

Perform bacteriological tests in accordance with AWWA C651 . For new water mains use Option A and obtain two sets of samples for coliform analysis, each sample being collected at least 16 hours apart. Take samples every 1,200 ft plus one set from the end of the line and at least one from each branch greater than one pipe length. Analyze samples by a certified laboratory, and submit the results of the bacteriological samples.

3.3.1.5 Backflow Preventer Tests

After installation conduct Backflow Preventer Tests and provide test reports verifying that the installation meets the FCCCHR Manual Standards.

3.3.1.6 Special Testing Requirements for Fire Service

Test water mains and water service lines providing fire service or water and fire service in accordance with NFPA 24. The additional water added to the system must not exceed the limits given in NFPA 24

3.3.1.7 Tracer Wire Continuity Test

Test tracer wire for continuity after service connections have been completed and prior to final pavement or restoration. Verify that tracer wire is locatable with electronic utility locating equipment. Repair breaks or separations and re-test for continuity.

3.4 SYSTEM STARTUP

Water mains and appurtenances must be completely installed, disinfected, flushed, and satisfactory bacteriological sample results received prior to permanent connections being made to the active distribution system. Obtain approval by the Contracting Officer prior to the new water piping being placed into service.

3.5 CLEANUP

Upon completion of the installation of water lines and appurtenances, remove all debris and surplus materials resulting from the work.

-- End of Section --

THIS PAGE HAS BEEN INTENTIONALLY LEFT BLANK

SECTION 33 11 23

NATURAL GAS AND LIQUID PETROLEUM PIPING
11/09

PART 1 GENERAL

1.1 REFERENCES

The publications listed below form a part of this specification to the extent referenced. The publications are referred to within the text by the basic designation only.

AMERICAN GAS ASSOCIATION (AGA)

AGA ANSI B109.1	(2000) Diaphragm Type Gas Displacement Meters (Under 500 cubic ft./hour Capacity)
AGA ANSI B109.2	(2000) Diaphragm Type Gas Displacement Meters (500 cubic ft./hour Capacity and Over)
AGA ANSI B109.3	(2019) Rotary-Type Gas Displacement Meters
AGA ANSI B109.4	(2016) Self-Operated Diaphragm-Type Natural Gas Service Regulators for Nominal Pipe Size 1¼ inches (32 mm) and Smaller with Outlet Pressures of 2 psig (13.8 kPa) and Less
AGA XR0603	(2006; 8th Ed) AGA Plastic Pipe Manual for Gas Service

AMERICAN NATIONAL STANDARDS INSTITUTE (ANSI)

ANSI Z21.41/CSA 6.9	(2014; R 2019) Quick-Disconnect Devices for Use with Gas Fuel Appliances
ANSI Z21.45	(1995) Flexible Connectors of Other Than All-Metal Construction for Gas Appliances
ANSI Z21.69/CSA 6.16	(2009; Addenda A 2012; R 2014) Connectors for Movable Gas Appliances

AMERICAN SOCIETY OF CIVIL ENGINEERS (ASCE)

ASCE 25-16	(2016) Earthquake-Activated Automatic Gas Shutoff Devices

AMERICAN SOCIETY OF MECHANICAL ENGINEERS (ASME)

ASME B1.1	(2003; R 2018) Unified Inch Screw Threads (UN and UNR Thread Form)
ASME B1.20.1	(2013; R 2018) Pipe Threads, General Purpose (Inch)
ASME B16.3	(2016) Malleable Iron Threaded Fittings,

	Classes 150 and 300
ASME B16.5	(2017) Pipe Flanges and Flanged Fittings NPS 1/2 Through NPS 24 Metric/Inch Standard
ASME B16.9	(2018) Factory-Made Wrought Buttwelding Fittings
ASME B16.11	(2016) Forged Fittings, Socket-Welding and Threaded
ASME B16.33	(2012; R 2017) Manually Operated Metallic Gas Valves for Use in Gas Piping Systems Up to 125 psi, (Sizes NPS 1/2 - NPS 2)
ASME B16.38	(2012; R 2017) Large Metallic Valves for Gas Distribution Manually Operated, NPS 2 1/2 (DN 65) to NPS 12 (DN 300), 125 psig 8.6 bar) Maximum
ASME B16.39	(2014) Standard for Malleable Iron Threaded Pipe Unions; Classes 150, 250, and 300
ASME B16.40	(2019) Manually Operated Thermoplastic Gas Shutoffs and Valves in Gas Distribution Systems
ASME B18.2.1	(2012; Errata 2013) Square and Hex Bolts and Screws (Inch Series)
ASME B18.2.2	(2015) Nuts for General Applications: Machine Screw Nuts, Hex, Square, Hex Flange, and Coupling Nuts (Inch Series)
ASME B31.8	(2018; Supplement 2018) Gas Transmission and Distribution Piping Systems
ASME BPVC SEC VIII D1	(2017) BPVC Section VIII-Rules for Construction of Pressure Vessels Division 1

ASTM INTERNATIONAL (ASTM)

ASTM A53/A53M	(2018) Standard Specification for Pipe, Steel, Black and Hot-Dipped, Zinc-Coated, Welded and Seamless
ASTM A193/A193M	(2019) Standard Specification for Alloy-Steel and Stainless Steel Bolting Materials for High-Temperature Service and Other Special Purpose Applications
ASTM A194/A194M	(2018) Standard Specification for Carbon Steel, Alloy Steel, and Stainless Steel Nuts for Bolts for High-Pressure or High-Temperature Service, or Both
ASTM D2513	(2018a) Standard Specification for Polyethylene (PE) Gas Pressure Pipe,

	Tubing, and Fittings
ASTM D2683	(2014) Standard Specification for Socket-Type Polyethylene Fittings for Outside Diameter-Controlled Polyethylene Pipe and Tubing

MANUFACTURERS STANDARDIZATION SOCIETY OF THE VALVE AND FITTINGS INDUSTRY (MSS)

MSS SP-58	(2018) Pipe Hangers and Supports - Materials, Design and Manufacture, Selection, Application, and Installation
MSS SP-69	(2003; Notice 2012) Pipe Hangers and Supports - Selection and Application (ANSI Approved American National Standard)

NATIONAL FIRE PROTECTION ASSOCIATION (NFPA)

NFPA 54	(2018) National Fuel Gas Code
NFPA 58	(2020) Liquefied Petroleum Gas Code

SHEET METAL AND AIR CONDITIONING CONTRACTORS' NATIONAL ASSOCIATION (SMACNA)

SMACNA 1981	(2008) Seismic Restraint Manual Guidelines for Mechanical Systems, 3rd Edition

U.S. DEPARTMENT OF DEFENSE (DOD)

MIL-STD-101	(2014; Rev C) Color Code for Pipelines and for Compressed Gas Cylinders

U.S. NATIONAL ARCHIVES AND RECORDS ADMINISTRATION (NARA)

49 CFR 192	Transportation of Natural and Other Gas by Pipeline: Minimum Federal Safety Standards
49 CFR 195	Transportation of Hazardous Liquids by Pipeline

1.2 RELATED REQUIREMENTS

Section 23 03 00.00 20 BASIC MECHANICAL MATERIALS AND METHODS applies to this section, with additions and modifications specified herein.

1.3 SUBMITTALS

Government approval is required for submittals with a "G" designation; submittals not having a "G" designation are [for Contractor Quality Control approval.][for information only. When used, a designation following the "G" designation identifies the office that will review the submittal for the Government.] Submittals with an "S" are for inclusion in the Sustainability eNotebook, in conformance with Section 01 33 29 SUSTAINABILITY REPORTING. Submit the following in accordance with Section 01 33 00 SUBMITTAL PROCEDURES:

SD-03 Product Data

Valve Box

Pressure Regulator

Gas Equipment Connectors

Valves

Warning and Identification Tape

Risers

Transition Fittings

Gas meter

[LPG Containers and Accessories]

SD-07 Certificates

Welder's Qualifications

PE Welder's Qualifications

Welder's Identification Symbols

SD-08 Manufacturer's Instructions

PE Pipe and Fittings

Submit manufacturer's installation instructions and manufacturer's visual joint appearance chart.

1.4 QUALITY ASSURANCE

1.4.1 Welder's Qualifications

Comply with ASME B31.8. The steel welder shall have a copy of a certified ASME B31.8 qualification test report. The PE welder shall have a certificate from a PE pipe manufacturer's sponsored training course. Contractor shall also conduct a qualification test. Submit each welder's identification symbols, assigned number, or letter, used to identify work of the welder. Affix symbols immediately upon completion of welds. Welders making defective welds after passing a qualification test shall be given a requalification test and, upon failing to pass this test, shall not be permitted to work this contract.

1.4.2 PE Welder's Qualifications

Prior to installation, Contractor shall have supervising and installing personnel trained by a PE pipe manufacturer's sponsored course of not less than one week duration, or present proof satisfactory to the Contracting Officer that personnel are currently working in the installation of PE gas distribution lines.

1.4.3 Safety Standards

49 CFR 192 [and 49 CFR 195].

1.5 DELIVERY, STORAGE, AND HANDLING

Handle, transport, and store plastic pipe and fittings carefully. Plug or cap pipe ends during transportation or storage to minimize dirt and moisture entry. Do not subject to abrasion or concentrated external loads. Discard PE pipe sections and fittings that have been damaged.

PART 2 PRODUCTS

2.1 MATERIALS AND EQUIPMENT

Conform to NFPA 54 and with requirements specified herein. Supply piping to appliances or equipment shall be at least as large as the inlets thereof.

2.2 PIPE AND FITTINGS

2.2.1 Aboveground and Within Buildings and Vaults

a. Pipe: Black steel in accordance with ASTM A53/A53M, Schedule [40] [80], threaded ends for sizes 2 inches and smaller; otherwise, plain end beveled for butt welding.

b. Threaded Fittings: ASME B16.3, black malleable iron.

c. Socket-Welding Fittings: ASME B16.11, forged steel.

d. Butt-Welding Fittings: ASME B16.9, with backing rings of compatible material.

e. Unions: ASME B16.39, black malleable iron.

f. Flanges and Flanged Fittings: ASME B16.5 steel flanges or convoluted steel flanges conforming to ASME BPVC SEC VIII D1. Flange faces shall have integral grooves of rectangular cross sections which afford containment for self-energizing gasket material.

2.2.2 Underground Polyethylene (PE)

PE pipe and fittings are as follows:

a. Pipe: ASTM D2513, 100 psig working pressure, Standard Dimension Ratio (SDR), the ratio of pipe diameter to wall thickness, 11.5 maximum.

b. Socket Fittings: ASTM D2683.

c. Butt-Fusion Fittings: ASTM D2513, molded.

2.2.3 Risers

Manufacturer's standard riser, transition from plastic to steel pipe with 7 to 12 mil thick epoxy coating. Use swaged gas-tight construction with O-ring seals, metal insert, and protective sleeve. Provide [remote bolt-on or bracket] [or] [wall-mounted] riser supports [as indicated].

2.2.4 Transition Fittings

[a. Steel to Plastic (PE): As specified for "riser" except designed for steel-to-plastic with tapping tee or sleeve. Coat or wrap exposed steel pipe with heavy plastic coating.

][b Plastic to Plastic: [Manufacturer's standard slip-on PE mechanical coupling, molded, with stainless-steel ring support, O-ring seals, and rated for 150 psig gas service.] [Manufacturer's standard fused tapping (PE-to-PE) tee assembly with shut-off feature.]

]2.3 SHUTOFF VALVES, BELOW GROUND

[2.3.1 Metallic Ball Valves

[ASME B16.33] [or] [ASME B16.38] corrosion-resisting steel, with threaded or flanged ends. Provide polytetrafluoroethylene (PTFE) seats.

][2.3.2 PE Ball or Plug Valves

ASME B16.40 and ASTM D2513, Class C materials (PE 2306 or PE 3406), strength rating of Class [1 location with class factor of 0.32] [2 location with class factor of 0.25] [3 location with class factor of 0.25] [4 location with class factor of 0.20], and SDR matching PE pipe dimensions and working pressure.

]2.4 VALVES, ABOVEGROUND

[Provide lockable valves where indicated.

]2.4.1 Shutoff Valves, Sizes Larger Than 2 Inches

[[Cast-iron] [or] [steel] body ball valve with flanged ends in accordance with ASME B16.38. Provide PTFE seats.

][Cast-iron body plug valve in accordance with ASME B16.38, nonlubricated, wedge-mechanism or tapered lift plug, and flanged ends.

]2.4.2 Shutoff Valves, Sizes 2 Inches and Smaller

[[Bronze] [Steel] body ball valve in accordance with ASME B16.33, full port pattern, reinforced PTFE seals, threaded ends, and PTFE seat.

][[Bronze] [Steel] body plug valve in accordance with ASME B16.33, straightway, taper plug, regular pattern with a port opening at least equal to the internal pipe area or round port full bore pattern, non-lubricated, PTFE packing, flat or square head stem with lever operator, 125 psig rating, threaded ends.

]2.4.3 Line Appliance Pressure Regulator and Shutoff Valve

Provide regulators conforming to [ANSI Z21.18/CSA 6.3 for appliances] [ANSI Z21.78/CSA 6.20 for combination gas controls for gas appliances] [, and ANSI Z21.80/CSA 6.22 for line pressure regulators]. Provide shutoff valves conforming to [ANSI Z21.15/CSA 9.1 for manually controlled gas shutoff valves] [and] [ANSI Z21.21/CSA 6.5 for automatic shutoff valves for gas appliances].

2.4.4 Service Regulators

a. Provide ferrous bodied pressure regulators for individual service

lines, capable of reducing distribution line pressure to pressures required for users. Provide service regulators conforming to AGA ANSI B109.4 CGA-6.18-M95 with full capacity internal relief[and overpressure shutoff]. Set pressure relief at a lower pressure than would cause unsafe operation of any connected user.

b. Adjust regulators for liquified petroleum gas to 10 to 12 inches of water column, with pressure relief set a 16 inches of water column.

c. Provide regulator(s) having a single port with orifice diameter no greater than that recommended by the manufacturer for the maximum gas flow rate at the regulator inlet pressure. Provide regulator valve vent of resilient materials designed to withstand flow conditions when pressed against the valve port, capable of regulating downstream pressure within limits of accuracy and limiting the buildup of pressure under no-flow conditions to 50 percent or less of the discharge pressure maintained under flow conditions. Provide a self-contained service regulator, and pipe not exceeding exceed 2 inch size.

2.4.5 Earthquake Automatic Gas Shutoff Valve

ASCE 25-16 and UL listed or AGA listed or International Association of Plumbing and Mechanical Officials (IAPMO) listed. The valve may be either pendulum or ball construction with [remote [, pneumatic] [electronic] [or] [electric]] actuator.

2.5 GAS METER

[AGA ANSI B109.1] [AGA ANSI B109.2] [AGA ANSI B109.3] [pipe] [pedestal] mounted, [diaphragm] or [bellow] [style], [cast-iron] [enamel coated steel] [aluminum] case. [Provided with a strainer immediately upstream]. Provide [diaphragm-type meter conforming to AGA ANSI B109.1 for required flow rates less than 500 cfh, or AGA ANSI B109.2, for flow rates 500 cfh and above] [rotary-type displacement meter conforming to AGA ANSI B109.3] as required by local gas utility supplier. Provide combined [odometer-type] register totalizer index, UV-resistant index cover, water escape hole in housing, and means for sealing against tampering. Provide temperature-compensated type meters sized for the required volumetric flow rate and suitable for accurately measuring and handling gas at pressures, temperatures, and flow rates indicated. Provide meters with over-pressure protection as specified in 49 CFR 192 and ASME B31.8. Provide meters that are tamper-proof [with] [frost protection] [fungus protection][seismic protection].Provide meters with a pulse switch initiator capable of operating up to speeds of 500 maximum pulses per minute with no false pulses and requiring no field adjustments. Provide not less than one pulse per 100 cubic feet of gas. Minimum service life shall be 30,000,000 cycles.

2.5.1 Utility Monitoring and Control System (UMCS) / Energy Monitoring and Control (EMCS) or Automatic Meter Reading Interfaces

Provide gas meters capable of interfacing the output signal, equivalent to volumetric flow rate, with the existing UMCS / EMCS for data gathering in units of cubic meters cubic feet. Provide meters that do not require power to function and deliver data. Output signal shall be either a voltage or amperage signal that can be converted to volumetric flow by using an appropriate scaling factor.

2.5.2 Measurement Configuration

For buildings that already have a gas meter with a pulse output, ensure that the pulse output is connected to a data gathering device (i.e. electric meter). For buildings where a natural gas meter already exists but does not have a pulse output, add a pulse kit to the existing meter and tie the output to a data gathering device. If the existing gas meter will not accept a pulse kit or if no meter exists a new natural gas meter shall be installed, also requiring a pulse output to a data gathering device. Ensure the pulse frequency and electronic characteristics are compatible with the existing data gathering device, if any.

2.6 GAS EQUIPMENT CONNECTORS

a. Flexible Connectors: ANSI Z21.45.

b. Quick Disconnect Couplings: ANSI Z21.41/CSA 6.9.

c. Semi-Rigid Tubing and Fittings: ANSI Z21.69/CSA 6.16.

2.7 VALVE BOX

Provide [street valve box with cast-iron cover and two-piece 5 1/4 inch shaft-slip valve box extension] [rectangular concrete valve box, sized large enough for removal of valve without removing box]. Cast the word "Gas" into the box cover. Use valve box for areas as follows:

a. Roads and Traffic Areas: Heavy duty, cast iron cover.

b. Other Areas: Standard duty, concrete cover.

[c. Airfields and Special Loadings: As detailed.

]2.8 CASING

Where indicated at railroad or other crossing, provide ASTM A53/A53M, galvanized pipe, Schedule 40 [, with extruded polyethylene coating].

2.9 BURIED UTILITY WARNING AND IDENTIFICATION TAPE

Provide detectable aluminum-foil plastic-backed tape or detectable magnetic plastic tape manufactured specifically for warning and identification of buried piping. Tape shall be detectable by an electronic detection instrument. Provide tape in rolls, 3 inch minimum width, color-coded yellow for natural gas, with warning and identification imprinted in bold black letters continuously and repeatedly over entire tape length. Warning and identification shall be "CAUTION BURIED GAS PIPING BELOW" or similar wording. Use permanent code and letter coloring unaffected by moisture and other substances contained in trench backfill material.

2.10 HANGERS AND SUPPORTS

MSS SP-58, as required by MSS SP-69.

2.11 WELDING FILLER METAL

ASME B31.8.

2.12 PIPE-THREAD TAPE

Antiseize and sealant tape of polytetrafluoroethylene (PTFE).

2.13 BOLTING (BOLTS AND NUTS)

Stainless steel bolting; ASTM A193/A193M, Grade B8M or B8MA, Type 316, for bolts; and ASTM A194/A194M, Grade 8M, Type 316, for nuts. Dimensions of bolts, studs, and nuts shall conform with ASME B18.2.1and ASME B18.2.2 with coarse threads conforming to ASME B1.1, with Class 2A fit for bolts and studs and Class 2B fit for nuts. Bolts or bolt-studs shall extend through the nuts and may have reduced shanks of a diameter not less than the diameter at root of threads. Bolts shall have American Standard regular square or heavy hexagon heads; nuts shall be American Standard heavy semifinished hexagonal.

2.14 GASKETS

Fluorinated elastomer, compatible with flange faces.

2.15 IDENTIFICATION FOR ABOVEGROUND PIPING

MIL-STD-101 for legends and type and size of characters. For pipes 3/4 inch od and larger, provide printed legends to identify contents of pipes and arrows to show direction of flow. Color code label backgrounds to signify levels of hazard. Make labels of plastic sheet with pressure-sensitive adhesive suitable for the intended application. For pipes smaller than 3/4 inch od, provide brass identification tags 1 1/2 inches in diameter with legends in depressed black-filled characters.

[2.16 (LIQUEFIED PETROLEUM GAS) LPG CONTAINERS AND ACCESSORIES

NFPA 58, [DOT] [or] [ASME] containers with appurtenances, system working pressure, minimum design pressure, that is LPG vapor pressure at 100 degrees F, and water capacity as indicated. Provide containers with piping and fittings, [fuse plugs], [hose and flexible hose connectors], [gas-air mixer], strainer, and marking conforming to NFPA 58.

]PART 3 EXECUTION

3.1 INSTALLATION

Install gas piping, appliances, and equipment in accordance with NFPA 54. [Install distribution piping in accordance with ASME B31.8.] [Install and store liquefied petroleum gas piping, appliances, and equipment in accordance with NFPA 58.]

3.1.1 Excavating and Backfilling

Perform excavating and backfilling of pipe trenches as specified in Section 31 00 00 EARTHWORK. Place pipe directly in trench bottom and cover with minimum 3 inches of sand to top of pipe. If trench bottom is rocky, place pipe on a 3 inch bed of sand and cover as above. Provide remaining backfilling. Coordinate provision of utility warning and identification tape with backfill operation. Bury utility warning and identification tape with printed side up at a depth of 12 inches below the top surface of earth or the top surface of the subgrade under pavements.

3.1.2 Piping

Cut pipe to actual dimensions and assemble to prevent residual stress. [Provide supply connections entering the buildings as indicated.] Within buildings, run piping parallel to structure lines and conceal in finished spaces. Terminate each vertical supply pipe to burner or appliance with tee, nipple and cap to form a sediment trap. To supply multiple items of gas-burning equipment, provide manifold with inlet connections at both ends.

3.1.2.1 Cleanliness

Clean inside of pipe and fittings before installation. Blow lines clear using 80 to 100 psig clean dry compressed air. Rap steel lines sharply along entire pipe length before blowing clear. Cap or plug pipe ends to maintain cleanliness throughout installation.

3.1.2.2 Aboveground Steel Piping

Determine and establish measurements for piping at the job site and accurately cut pipe lengths accordingly. For 2 inch diameter and smaller, use threaded or socket-welded joints. For 2 1/2 inch diameter and larger, use flanged or butt-welded joints.

a. Threaded Joints: Where possible use pipe with factory-cut threads, otherwise cut pipe ends square, remove fins and burrs, and cut taper pipe threads in accordance with ASME B1.20.1. Provide threads smooth, clean, and full-cut. Apply anti-seize paste or tape to male threads portion. Work piping into place without springing or forcing. Backing off to permit alignment of threaded joints will not be permitted. Engage threads so that not more than three threads remain exposed. Use unions for connections to [valves] [meters] for which a means of disconnection is not otherwise provided.

b. Welded Joints: Weld by the shielded metal-arc process, using covered electrodes and in accordance with procedures established and qualified in accordance with ASME B31.8.

c. Flanged Joints: Use flanged joints for connecting welded joint pipe and fittings to valves to provide for disconnection. Install joints so that flange faces bear uniformly on gaskets. Engage bolts so that there is complete threading through the nuts and tighten so that bolts are uniformly stressed and equally torqued.

d. Pipe Size Changes: Use reducing fittings for changes in pipe size. Size changes made with bushings will not be accepted.

e. Painting: Paint new ferrous metal piping, including supports, in accordance with Section 09 90 00 PAINTS AND COATINGS. Do not apply paint until piping tests have been completed.

f. Identification of Piping: Identify piping aboveground in accordance with MIL-STD-101, using adhesive-backed or snap-on plastic labels and arrows. In lieu of labels, identification tags may be used. Apply labels or tags to finished paint at intervals of not more than 50 feet. Provide two copies of the piping identification code framed under glass and install where directed.

3.1.2.3 Buried Plastic Lines

Provide totally PE piping. Prior to installation, obtain printed instructions and technical assistance in proper installation techniques from pipe manufacturer.[When joining new PE pipe to existing pipe line, ascertain what procedural changes in the fusion process is necessary to attain optimum bonding.]

a. Jointing Procedures: Use jointing procedures conforming to AGA XR0603 and 49 CFR 192 that have been qualified by test in accordance with 49 CFR 192.283 and proven to make satisfactory joints. Personnel make joints in plastic pipe shall be qualified in accordance with 49 CFR 192.285, under the submitted and approved procedure by making a satisfactory specimen joint that passes the required inspection and test. Joints in plastic pipe shall be inspected by a person qualified by 49 CFR 192.287 under the applicable procedure. Certificates that qualify the applicable procedures, joining personnel, and inspectors shall be submitted and approved and shall be on file with the Contracting Officer prior to making these joints.

b. PE Piping: Prior to installation, Contractor shall have supervising and installing personnel, certified in accordance with paragraph WELDER'S QUALIFICATIONS. Provide fusion-welded joints except where transitions have been specified. Use electrically heated tools, thermostatically controlled and equipped with temperature indication. (Where connection must be made to existing plastic pipe, contractor shall be responsible for determination of compatibility of materials and procedural changes in fusion process necessary to attain maximum integrity of bond.)

c. Laying PE Pipe: Bury pipe 24 inches below finish grade [or deeper when indicated]. Lay in accordance with manufacturer's printed instructions.

3.1.2.4 Connections to Existing Pipeline

When making connections to live gas mains, use pressure tight installation equipment operated by workmen trained and experienced in making hot taps. For connections to existing underground pipeline or service branch, use transition fittings for dissimilar materials.

3.1.2.5 Wrapping

Where connection to existing steel line is made underground, tape wrap new steel transition fittings and exposed existing pipe having damaged coating. Clean pipe to bare metal. Initially stretch first layer of tape to conform to the surface while spirally half-lapping. Apply a second layer, half-lapped and spiraled as the first layer, but with spirals perpendicular to first wrapping. Use 10 mil minimum thick polyethylene tape. In lieu of tape wrap, heat shrinkable 10 mil minimum thick polyethylene sleeve may be used.

3.1.3 Valves

Install valves approximately at locations indicated. Orient stems vertically, with operators on top, or horizontally. [Provide support for valves to resist operating torque applied to PE pipes.]

3.1.3.1 Stop Valve and Shutoff Valve

Provide stop valve on service branch at connection to main and shut-off

valve on riser outside of building.

3.1.4 Gas Service Installation

[Gas service line, service regulator and gas company meter shall be installed in accordance with Section 33 51 15 NATURAL-GAS / LIQUID PETROLEUM GAS DISTRIBUTION PIPELINES.]Installations shall be in accordance with 49 CFR 192 and ASME B31.8. Contractor shall submit and use only tested and approved work procedures. Contractor shall use only welders and jointers who have been recently qualified by training and test for joining and installing the gas pipe material used on this job. The finished product shall be inspected by a person qualified to inspect joints made by the particular procedures used to make joints.

[3.1.4.1 Service Line

Install service line, branch connection to the main, and riser in accordance with 49 CFR 192 and ASME B31.8. Provide a minimum of 18 inches cover or encase the service line so that it is protected. Install service line so that no undue stress is applied to the pipe, connection, or riser. Install approved riser and terminate with an approved isolation valve, EFV and automatic shutoff device. After laying of pipe and testing, backfill the trench in accordance with Section 31 00 00 EARTHWORK.

Where steel pipe is used as service line, install corrosion prevention coating and cathodic protect for the steel service line. Where connected to an existing cathodically protected steel pipe, ensure electrical continuity from the riser to the branch connection to the main. Install a dielectric fitting on the riser to prevent electrical continuity to the above ground piping.

Where plastic pipe is used as the service line, make joints in accordance with procedures qualified by test. Personnel joining plastic pipe shall be qualified by making a satisfactory specimen joint that passes the required inspection and test listed in 49 CFR 192.285. Inspection shall be made by inspectors qualified in evaluating joints made under the specific joining procedure, as required by 49 CFR 192.287.

3.1.4.2 Service Regulator

Install service regulator in accordance with 49 CFR 192 and ASME B31.8 and this specification ensuring that the customer's piping is protected from over pressurization should the service regulator fail. A 3/8 inch tapped fitting equipped with a plug shall be provided on both sides of the service regulator for installation of pressure gauges for adjusting the regulator. For inside installations, route the regulator vent pipe through the exterior wall to the atmosphere, and seal building penetrations for service line and vent. Terminate the regulator vent so that it is protected from precipitation and insect intrusion, so that it is not submerged during floods, and so that gas escaping will not create a hazard or enter the building through openings.

3.1.4.3 Gas Meter

Install shutoff valve, meter set assembly, and service regulator on the service line [outside the building] [inside the building, a minimum of 3 feet from any potential ignition source], 18 inches above the [ground] [finished floor] on the riser. An insulating joint (dielectric connection) shall be installed on the inlet side of the meter set assembly

and service regulator and shall be constructed to prevent flow of electrical current.

]3.1.5 Pipe Sleeves

[Comply with Section 07 84 00 FIRESTOPPING.]Where piping penetrates concrete or masonry wall, floor or firewall, provide pipe sleeve poured or grouted in place. Make sleeve of steel or cast-iron pipe of such size to provide 1/4 inch or more annular clearance around pipe. Extend sleeve through wall or slab and terminate flush with both surfaces. Pack annular space with oakum, and caulk at ends with silicone construction sealant.

3.1.6 Piping Hangers and Supports

Selection, fabrication, and installation of piping hangers and supports shall conform with MSS SP-69 and MSS SP-58, unless otherwise indicated. [Provide seismic restraints in accordance with SMACNA 1981.]

3.1.7 Final Connections

Make final connections to equipment and appliances using rigid pipe and fittings, except for the following:

3.1.7.1 Domestic Water Heaters

Connect with AGA-Approved semi-rigid tubing and fittings.

3.1.7.2 Kitchen Equipment

Install AGA-Approved gas equipment connectors. Connectors shall be long enough [to permit movement of equipment for cleaning] [and] [to afford access to coupling].

3.2 FIELD QUALITY CONTROL

3.2.1 Metal Welding Inspection

Inspect for compliance with [NFPA 54] [and] [ASME B31.8] and 49 CFR 192. Replace, repair, and then re-inspect defective welds.

3.2.2 PE Fusion Welding Inspection

Visually inspect butt joints by comparing with, manufacturer's visual joint appearance chart. Inspect fusion joints for proper fused connection. Replace defective joints by cutting out defective joints or replacing fittings. Inspect 100 percent of all joints and reinspect all corrections. Arrange with the pipe manufacturer's representative in the presence of the Contracting Officer to make first time inspection.

3.2.3 Pressure Tests

Use test pressure of 1 1/2 times maximum working pressure, but in no case less than 50 psig. Do not test until every joint has set and cooled at least 8 hours at temperatures above 50 degrees F. Conduct testing before backfilling; however, place sufficient backfill material between fittings to hold pipe in place during tests. Test system gas tight in accordance with [NFPA 54] [or] [ASME B31.8]. Use clean dry air or inert gas, such as nitrogen or carbon dioxide, for testing. Systems which may be contaminated by gas shall first be purged as specified. Make tests on

entire system or on sections that can be isolated by valves. After pressurization, isolate entire piping system from sources of air during test period. Maintain test pressure for at least 8 hours between times of first and last reading of pressure and temperature. Take first reading at least one hour after test pressure has been applied. Do not take test readings during rapid weather changes. Provide temperature same as actual trench conditions. There shall be no reduction in the applied test pressure other than that due to a change in ambient temperature. Allow for ambient temperature change in accordance with the relationship PF + 14.7 = (P1 + 14.7) (T2 + 460) / T1 + 460), in which "T" and "PF" represent Fahrenheit temperature and gage pressure, respectively, subscripts "1" and "2" denote initial and final readings, and "PF" is the calculated final pressure. If "PF" exceeds the measured final pressure (final gage reading) by 1/2 psi or more, isolate sections of the piping system, retest each section individually, and apply a solution of warm soapy water to joints of each section for which a reduction in pressure occurs after allowing for ambient temperature change. Repair leaking joints and repeat test until no reduction in pressure occurs. In performing tests, use a test gage calibrated in one psi increments and readable to 1/2 psi.

3.2.4 System Purging

After completing pressure tests, and before testing a gas contaminated line, purge line with nitrogen at junction with main line to remove all air and gas. Clear completed line by attaching a test pilot fixture at capped stub-in line at building location and let gas flow until test pilot ignites. Procedures shall conform to [NFPA 54] [and] [ASME B31.8].

-CAUTION-
Failure to purge may result in explosion within line when air-to-gas is at correct mixture.

-- End of Section --

SECTION 33 30 00

SANITARY SEWERAGE
05/18

PART 1 GENERAL

1.1 REFERENCES

The publications listed below form a part of this specification to the extent referenced. The publications are referred to within the text by the basic designation only.

AMERICAN CONCRETE PIPE ASSOCIATION (ACPA)

ACPA 01-102	(2000) Concrete Pipe Handbook
ACPA 01-103	(2000) Concrete Pipe Installation Manual

AMERICAN RAILWAY ENGINEERING AND MAINTENANCE-OF-WAY ASSOCIATION (AREMA)

AREMA Eng Man	(2017) Manual for Railway Engineering

AMERICAN SOCIETY OF MECHANICAL ENGINEERS (ASME)

ASME B1.20.1	(2013; R 2018) Pipe Threads, General Purpose (Inch)
ASME B16.1	(2015) Gray Iron Pipe Flanges and Flanged Fittings Classes 25, 125, and 250
ASME B18.2.2	(2015) Nuts for General Applications: Machine Screw Nuts, Hex, Square, Hex Flange, and Coupling Nuts (Inch Series)
ASME B18.5.2.1M	(2006; R 2011) Metric Round Head Short Square Neck Bolts
ASME B18.5.2.2M	(1982; R 2010) Metric Round Head Square Neck Bolts

AMERICAN WATER WORKS ASSOCIATION (AWWA)

AWWA C104/A21.4	(2016) Cement-Mortar Lining for Ductile-Iron Pipe and Fittings for Water
AWWA C110/A21.10	(2012) Ductile-Iron and Gray-Iron Fittings for Water
AWWA C111/A21.11	(2017) Rubber-Gasket Joints for Ductile-Iron Pressure Pipe and Fittings
AWWA C115/A21.15	(2011) Flanged Ductile-Iron Pipe With Ductile-Iron or Gray-Iron Threaded Flanges
AWWA C151/A21.51	(2017) Ductile-Iron Pipe, Centrifugally

	Cast
AWWA C153/A21.53	(2019) Ductile-Iron Compact Fittings for Water Service
AWWA C600	(2017) Installation of Ductile-Iron Mains and Their Appurtenances
AWWA C605	(2014) Underground Installation of Polyvinyl Chloride (PVC) and Molecularly Oriented Polyvinyl Chloride (PVCO) Pressure Pipe and Fittings
AWWA C606	(2015) Grooved and Shouldered Joints
AWWA C900	(2016) Polyvinyl Chloride (PVC) Pressure Pipe, and Fabricated Fittings, 4 In. Through 60 In. (100 mm Through 1,500 mm)

ASTM INTERNATIONAL (ASTM)

ASTM A47/A47M	(1999; R 2018; E 2018) Standard Specification for Ferritic Malleable Iron Castings
ASTM A48/A48M	(2003; R 2012) Standard Specification for Gray Iron Castings
ASTM A123/A123M	(2017) Standard Specification for Zinc (Hot-Dip Galvanized) Coatings on Iron and Steel Products
ASTM A307	(2014; E 2017) Standard Specification for Carbon Steel Bolts, Studs, and Threaded Rod 60 000 PSI Tensile Strength
ASTM A536	(1984; R 2014) Standard Specification for Ductile Iron Castings
ASTM A563	(2015) Standard Specification for Carbon and Alloy Steel Nuts
ASTM A746	(2018) Standard Specification for Ductile Iron Gravity Sewer Pipe
ASTM C12	(2017) Standard Practice for Installing Vitrified Clay Pipe Lines
ASTM C33/C33M	(2018) Standard Specification for Concrete Aggregates
ASTM C94/C94M	(2018) Standard Specification for Ready-Mixed Concrete
ASTM C150/C150M	(2018) Standard Specification for Portland Cement
ASTM C270	(2019) Standard Specification for Mortar for Unit Masonry

ASTM C443	(2012; R 2017) Standard Specification for Joints for Concrete Pipe and Manholes, Using Rubber Gaskets
ASTM C478	(2018) Standard Specification for Circular Precast Reinforced Concrete Manhole Sections
ASTM C478M	(2018) Standard Specification for Precast Reinforced Concrete Manhole Sections (Metric)
ASTM C828	(2011) Low-Pressure Air Test of Vitrified Clay Pipe Lines
ASTM C923	(2008; R 2013; E 2016) Standard Specification for Resilient Connectors Between Reinforced Concrete Manhole Structures, Pipes and Laterals
ASTM C969	(2019) Standard Practice for Infiltration and Exfiltration Acceptance Testing of Installed Precast Concrete Pipe Sewer Lines
ASTM C972	(2000; R 2011) Compression-Recovery of Tape Sealant
ASTM C990	(2009; R 2014) Standard Specification for Joints for Concrete Pipe, Manholes and Precast Box Sections Using Preformed Flexible Joint Sealants
ASTM C1214	(2013) Standard Test Method for Concrete Pipe Sewerlines by Negative Air Pressure (Vacuum) Test Method
ASTM C1244	(2011; R 2017) Standard Test Method for Concrete Sewer Manholes by the Negative Air Pressure (Vacuum) Test Prior to Backfill
ASTM D412	(2016) Standard Test Methods for Vulcanized Rubber and Thermoplastic Elastomers - Tension
ASTM D624	(2000; R 2012) Standard Test Method for Tear Strength of Conventional Vulcanized Rubber and Thermoplastic Elastomers
ASTM D1784	(2011) Standard Specification for Rigid Poly(Vinyl Chloride) (PVC) Compounds and Chlorinated Poly(Vinyl Chloride) (CPVC) Compounds
ASTM D1785	(2015; E 2018) Standard Specification for Poly(Vinyl Chloride) (PVC), Plastic Pipe, Schedules 40, 80, and 120

ASTM D2241	(2015) Standard Specification for Poly(Vinyl Chloride) (PVC) Pressure-Rated Pipe (SDR Series)
ASTM D2321	(2018) Standard Practice for Underground Installation of Thermoplastic Pipe for Sewers and Other Gravity-Flow Applications
ASTM D2464	(2015) Standard Specification for Threaded Poly(Vinyl Chloride) (PVC) Plastic Pipe Fittings, Schedule 80
ASTM D2466	(2017) Standard Specification for Poly(Vinyl Chloride) (PVC) Plastic Pipe Fittings, Schedule 40
ASTM D2467	(2015) Standard Specification for Poly(Vinyl Chloride) (PVC) Plastic Pipe Fittings, Schedule 80
ASTM D3034	(2016) Standard Specification for Type PSM Poly(Vinyl Chloride) (PVC) Sewer Pipe and Fittings
ASTM D3139	(1998; R 2011) Joints for Plastic Pressure Pipes Using Flexible Elastomeric Seals
ASTM D3212	(2007; R 2013) Standard Specification for Joints for Drain and Sewer Plastic Pipes Using Flexible Elastomeric Seals
ASTM D3753	(2019) Glass-Fiber-Reinforced Polyester Manholes and Wetwells
ASTM D4101	(2017) Standard Classification System and Basis for Specification for Polypropylene Injection and Extrusion Materials
ASTM F477	(2014) Standard Specification for Elastomeric Seals (Gaskets) for Joining Plastic Pipe
ASTM F949	(2015; R 2019) Standard Specification for Poly(Vinyl Chloride) (PVC) Corrugated Sewer Pipe with a Smooth Interior and Fittings

U.S. NATIONAL ARCHIVES AND RECORDS ADMINISTRATION (NARA)

29 CFR 1910.27	(N0v 2016) Scaffolds and Roope Descent Systems

UNI-BELL PVC PIPE ASSOCIATION (UBPPA)

UBPPA UNI-B-6	(1998) Recommended Practice for Low-Pressure Air Testing of Installed Sewer Pipe

1.2 SUBMITTALS

Government approval is required for submittals with a "G" designation; submittals not having a "G" designation are for Contractor Quality Control approval. Submittals with an "S" are for inclusion in the Sustainability eNotebook, in conformance to Section 01 33 29 SUSTAINABILITY REPORTING. Submit the following in accordance with Section 01 33 00 SUBMITTAL PROCEDURES:

SD-01 Preconstruction Submittals

Contractor's License; G

SD-02 Shop Drawings

Installation Drawings; G

SD-03 Product Data

Precast Concrete Manholes

Frames, Covers, and Gratings

Gravity Pipe

Pressure Pipe

Precast Concrete Septic Tanks; G

SD-06 Test Reports

Precast Concrete Sewer Manhole Test; G

Hydrostatic Sewer Test; G

Infiltration Tests And Exfiltration Tests; G

Negative Air Pressure Test; G

Low-Pressure Air Tests; G

Tests For Pressure Lines; G

Concrete Pipe Test; G

SD-07 Certificates

Portland Cement

Gaskets

Pre-Installation Inspection Request; G

Post-Installation Inspection; G

1.3 QUALITY CONTROL

1.3.1 Installer Qualifications

Install specified materials by a licensed underground utility Contractor licensed for such work in the state where the work is to be performed. Verify installing Contractor's License is current and state certified or state registered.

1.4 DELIVERY, STORAGE, AND HANDLING

1.4.1 Delivery and Storage

Check upon arrival; identify and segregate as to types, functions, and sizes. Store off the ground in a manner affording easy accessibility and not causing excessive rusting or coating with grease or other objectionable materials.

1.4.1.1 Piping

Inspect materials delivered to site for damage; store with minimum of handling. Store materials on site in enclosures or under protective coverings. Store plastic piping and jointing materials and rubber gaskets under cover out of direct sunlight. Do not store materials directly on the ground. Keep inside of pipes and fittings free of dirt and debris.

1.4.2 Handling

Handle pipe, fittings, and other accessories in such manner as to ensure delivery to the trench in sound undamaged condition. Take special care not to damage linings of pipe and fittings; if lining is damaged, make satisfactory repairs. Carry, do not drag, pipe to trench. Store solvents, solvent compounds, lubricants, elastomeric gaskets, and any similar materials required to install the plastic pipe in accordance with the manufacturer's recommendation and discard those materials if the storage period exceeds the recommended shelf life. Discard solvents in use when the recommended pot life is exceeded.

PART 2 PRODUCTS

2.1 SYSTEM DESCRIPTION

2.1.1 Sanitary Sewer Gravity Pipeline

Provide new and modify existing exterior sanitary gravity sewer piping and appurtenances. Provide each system complete and ready for operation. The exterior sanitary gravity sewer system includes equipment, materials, installation, and workmanship as specified herein more than 5 feet outside of building walls.

2.2 MATERIALS

Provide materials conforming to the respective specifications and other requirements specified below. Submit manufacturer's product specification,standard drawings or catalog cuts.

2.2.1 Gravity Pipe

2.2.1.1 Ductile Iron Gravity Sewer Pipe and Associated Fittings

2.2.1.1.1 Ductile Iron Gravity Pipe and Fittings

Provide ductile iron pipe conforming to ASTM A746 with cement-mortar lining in conforming to AWWA C104/A21.4, Pressure Class 52. Provide push-on joints conforming to AWWA C111/A21.11.

2.2.1.2 PVC Gravity Sewer Piping

2.2.1.2.1 PVC Gravity Pipe and Fittings

ASTM D3034, SDR 35, or ASTM F949 with ends suitable for elastomeric gasket joints.

2.2.1.2.2 PVC Gravity Joints and Jointing Material

Provide joints conforming to ASTM D3212. Gaskets are to conform to ASTM F477.

2.2.2 Pressure Pipe

2.2.2.1 Ductile Iron Pressure Piping

2.2.2.1.1 Ductile Iron Pressure Pipe and Fittings

Provide flanged ductile-iron pipe conforming to AWWA C151/A21.51, Thickness Class 52. Provide fittings conforming to AWWA C110/A21.10 or AWWA C153/A21.53. Provide fittings with push-on joint ends conforming to AWWA C111/A21.11. Use fittings which have a pressure rating at least equivalent to that of the pipe. Pipe and fittings are to have cement-mortar lining conforming to AWWA C104/A21.4, standard thickness.

2.2.2.1.2 Ductile Iron Pressure Joints and Jointing Materials

a. Joints, general: Use push-on joints for pipe and fittings except as otherwise specified in this paragraph. Joints made with sleeve-type mechanical coupling may be used in lieu of push-on joint.

b. Push-on joints: Shape of pipe ends and fitting ends, gaskets, and lubricant for joint assembly are to conform to AWWA C111/A21.11.

c. Mechanical joints: Dimensional and material requirements for pipe ends, glands, bolts and nuts, and gaskets are to conform to AWWA C111/A21.11.

d. Flanged joints: Provide bolts, nuts, and gaskets for flanged connections as recommended in the Appendix to AWWA C115/A21.15. Provide flange for setscrewed flanges of ductile iron, ASTM A536, Grade 65-45-12, and conforming to the applicable requirements of ASME B16.1, Class 250. Provide 190,000 psi tensile strength, heat treated, and zinc-coated steel setscrews for setscrewed flanges. Conform gasket for setscrewed flanges to the applicable requirements for mechanical-joint gaskets specified in AWWA C111/A21.11. Design of setscrewed gasket are to provide for confinement and compression of gasket when joint to adjoining flange is made.

e. Joints made with sleeve-type mechanical couplings: Provide couplings designed to couple plain-end piping by compression of a ring gasket at each end of the adjoining pipe sections. Provide couplings consisting of one middle ring flared or beveled at each end to provide a gasket seat, two follower rings, two resilient tapered rubber gaskets, and

bolts and nuts to draw the follower rings toward each other to compress the gaskets. The middle ring and the follower rings are to be true circular sections free from irregularities, flat spots, and surface defects; the design is to provide for confinement and compression of the gaskets. The middle ring is to be of cast-iron or steel, and the follower rings are to be of malleable iron or ductile iron. Cast iron couplings are to conform to ASTM A48/A48M and not be less than Class 25. Malleable iron couplings are to conform to ASTM A47/A47M. Ductile iron couplings are to conform to ASTM A536. Gaskets are to be designed for long life and resistance to set after installation and meet the applicable requirements specified for gaskets for mechanical joint in AWWA C111/A21.11. Bolts are to be track-head type; bolts and nuts are to be either of the following: bolts conforming to the tensile requirements of ASTM A307, Grade A, with nuts conforming to the tensile requirements of ASTM A563, Grade A; or round-head square-neck type bolts conforming to ASME B18.5.2.1M and ASME B18.5.2.2M with hex nuts conforming to ASME B18.2.2. Bolts are to be 5/8 inch in diameter; minimum number of bolts for each coupling shall be 3 for 3 inch pipe, 4 for 4 inch pipe, and 5 for 5 inch pipe.. Bolt holes in follower rings are to be of a shape to hold fast the necks of the bolts used. Sleeve-type mechanical couplings are not to be used as an optional method of jointing except where pipeline is adequately anchored to resist tension pull across the joint.

f. Grooved and Shouldered Type Joints: Grooved pipe ends Shouldered pipe ends and couplings are to conform to AWWA C606. Joint dimensions are to be as specified in AWWA C606 for rigid joints.

2.2.2.2 PVC Pressure Pipe and Associated Fittings

Pipe, couplings and fittings are to be manufactured of materials conforming to ASTM D1784, Class 12454B.

2.2.2.2.1 Pipe and Fittings Less Than 4 inch Diameter

2.2.2.2.1.1 Screw-Joint

Provide pipe conforming to dimensional requirements of ASTM D1785, Schedule 80, with joints meeting requirements of 150 psi working pressure, 200 psi hydrostatic test pressure, unless otherwise shown or specified. Provide fittings for threaded pipe conforming to requirements of ASTM D2464, threaded to conform to the requirements of ASME B1.20.1 for use with Schedule 80 pipe and fittings. Pipe couplings when used, are to be tested as required by ASTM D2464.

2.2.2.2.1.2 Push-On Joint
ASTM D3139, with ASTM F477 gaskets. Fittings for push-on joints are to be iron conforming to AWWA C110/A21.10 or AWWA C153/A21.53 and AWWA C111/A21.11 with a cement-mortar lining conforming to AWWA C104/A21.4, standard thickness.

2.2.2.2.1.3 Solvent Cement Joint

Provide pipe conforming to dimensional requirements of ASTM D1785 or ASTM D2241 with joints meeting the requirements of 150 psi working pressure and 200 psi hydrostatic test pressure. Fittings for solvent cement jointing are to conform to ASTM D2466 or ASTM D2467.

2.2.2.2.2 Pipe and Fittings 4 inch Diameter And Larger

Provide pipe conforming to AWWA C900 and be plain end or gasket bell end, Pressure Class 150 (DR 18) , with cast-iron-pipe-equivalent OD. Fittings are to be gray-iron or ductile-iron conforming to AWWA C110/A21.10 or AWWA C153/A21.53 and AWWA C111/A21.11 with a cement-mortar lining conforming to AWWA C104/A21.4, standard thickness. Fittings for pipe to pipe push-on joint ends are to conform with AWWA C900.

2.2.3 Piping Beneath Railroad Right-of-Way

Where pipeline passes under the right-of-way of a commercial railroad, piping is to conform to the specifications for pipelines conveying nonflammable substances in AREMA Eng Man, except as otherwise specified in this paragraph. For casing pipe provide ductile-iron pipe in lieu of cast-iron soil pipe. Ductile-iron pipe is to conform to and have strength computed in accordance with ASTM A746.

2.2.4 Cement Mortar

Provide cement mortar conforming to ASTM C270, Type M with Type II cement.

2.2.5 Portland Cement

Submit certificates of compliance stating the type of cement used in manufacture of concrete pipe, fittings, septic tanks, and precast manholes. Provide portland cement conforming to ASTM C150/C150M, Type II for concrete used in concrete pipe, concrete pipe fittings, septic tanks, and manholes and type optional for cement used in concrete cradle, concrete encasement, and thrust blocking. ,Use a cement containing less than 0.60 percent alkalies where aggregates are alkali reactive, as determined by Appendix XI of ASTM C33/C33M.

2.2.6 Portland Cement Concrete

Provide portland cement concrete conforming to ASTM C94/C94M, compressive strength of 4000 psi at 28 days, except for concrete cradle and encasement or concrete blocks for manholes. Concrete used for cradle and encasement is to have a compressive strength of 2500 psi minimum at 28 days. Protect concrete in place from freezing and moisture loss for 7 days.

2.2.7 Precast Concrete Manholes

Provide precast concrete manholes, risers, base sections, and tops conforming to ASTM C478 and be manufactured in accordance with Section 03 42 13.00 10 PLANT-PRECAST CONCRETE PRODUCTS FOR BELOW GRADE CONSTRUCTION; base and first riser are to be monolithic.

2.2.8 Glass-Fiber-Reinforced Polyester Manholes

Glass-Fiber-Reinforced Polyester Manholes are to conform to ASTM D3753.

2.2.9 Gaskets and Connectors

Provide gaskets for joints between manhole sections conforming to ASTM C443. Resilient connectors for making joints between manhole and pipes entering manhole are to conform to ASTM C923 or ASTM C990.

2.2.10 External Preformed Rubber Joint Seals

An external preformed rubber joint seal is an accepted method of sealing cast iron covers to precast concrete sections to prevent ground water infiltration into sewer systems. All finished and sealed manholes constructed in accordance with paragraph entitled "Manhole Construction" are to be tested for leakage in the same manner as pipelines as described in paragraph entitled "Leakage Tests." The seal is to be multi-section with a neoprene rubber top section and all lower sections made of Ethylene Propylene Diene Monomer (EPDM) rubber with a minimum thickness of 60 mils. Each unit is to consist of a top and bottom section and have mastic on the bottom of the bottom section and mastic on the top and bottom of the top section. The mastic is to be a non-hardening butyl rubber sealant and seal to the cone/top slab of the manhole/catch basin and over the lip of the casting. Extension sections are to cover up to two more adjusting rings. Properties and values are listed in the following table:

Properties, Test Methods and Minimum Values for Rubber used in Preformed Joint Seals				
Physical Properties	Test Methods	EPDM	Neoprene	Butyl Mastic
Tensile, psi	ASTM D412	1840	2195	--
Elongation, percent	ASTM D412	553	295	350
Tear Resistance, ppi	ASTM D624 (Die B)	280	160	--
Rebound, percent, 5 minutes	ASTM C972 (mod.)	--	--	11
Rebound, percent, 2 hours	ASTM C972	--	--	12

2.2.11 Frames, Covers, and Gratings for Manholes

Frame and cover are to be cast gray iron, ASTM A48/A48M, Class 35B, cast ductile iron, ASTM A536, Grade 65-45-12, or reinforced concrete, ASTM C478 ASTM C478M. Frames and covers are to be circular without vent holes. Size are to be for 24 inch opening. Stamp or cast the words "Sanitary Sewer" into covers so that it is plainly visible.

2.2.12 Manhole Steps

Zinc-coated steel conforming to 29 CFR 1910.27 with a plastic or rubber coating pressure-molded to the steel is to be used. Provide plastic coating conforming to ASTM D4101, copolymer polypropylene. Rubber is to conform to ASTM C443, except shore A durometer hardness is to be 70 plus or minus 5. Aluminum steps or rungs will not be permitted. Steps are not required in manholes less than 4 feet deep.

2.2.13 Manhole Ladders

Provide a steel ladder where the depth of a manhole exceeds 12 feet. The ladder is not to be less than 16 inches in width, with 3/4 inch diameter rungs spaced 12 inches apart. The two stringers are to be a minimum 3/8

inch thick and 2 inches wide. Galvanize ladders and inserts after fabrication in conformance with ASTM A123/A123M.

PART 3 EXECUTION

3.1 PREPARATION

3.1.1 Installation Drawings

Submit Installation Drawings showing complete detail, both plan and side view details with proper layout and elevations.

3.2 INSTALLATION

Backfill after inspection by the Contracting Officer. Before, during, and after installation, protect plastic pipe and fittings from any environment that would result in damage or deterioration to the material. Keep a copy of the manufacturer's instructions available at the construction site at all times and follow these instructions unless directed otherwise by the Contracting Officer.

3.2.1 Connections to Existing Lines

Obtain approval from the Contracting Officer before making connection to existing line. Conduct work so that there is minimum interruption of service on existing line.

3.2.2 General Requirements for Installation of Pipelines

These general requirements apply except where specific exception is made in the following paragraphs entitled "Special Requirements."

3.2.2.1 Location

Terminate the work covered by this section at a point approximately 5 feet from the building, unless otherwise indicated.

3.2.2.1.1 Sanitary Piping Installation Parallel with Water Line

3.2.2.1.1.1 Normal Conditions

Install sanitary piping or manholes at least 10 feet horizontally from a water line whenever possible. Measure the distance from edge-to-edge.

3.2.2.1.1.2 Unusual Conditions

When local conditions prevent a horizontal separation of 10 feet, the sanitary piping or manhole may be laid closer to a water line provided that:

a. The top (crown) of the sanitary piping is to be at least 18 inches below the bottom (invert) of the water main.

b. Where this vertical separation cannot be obtained, construct the sanitary piping with AWWA-approved ductile iron water pipe pressure and conduct a hydrostatic sewer testwithout leakage prior to backfilling.

c. The sewer manhole is to be of watertight construction and tested in

place.

3.2.2.1.2 Installation of Sanitary Piping Crossing a Water Line

3.2.2.1.2.1 Normal Conditions

Lay sanitary sewer piping by crossing under water lines to provide a separation of at least 18 inches between the top of the sanitary piping and the bottom of the water line whenever possible.

3.2.2.1.2.2 Unusual Conditions

When local conditions prevent a vertical separation described above, use the following construction:

a. Construct sanitary piping passing over or under water lines with AWWA-approved ductile iron water pressure piping and conduct a hydrostatic sewer testwithout leakage prior to backfilling.

b. Protect sanitary piping passing over water lines by providing:

(1) A vertical separation of at least 18 inches between the bottom of the sanitary piping and the top of the water line.

(2) Adequate structural support for the sanitary piping to prevent excessive deflection of the joints and the settling on and breaking of the water line.

(3) That the length, minimum 20 feet, of the sanitary piping be centered at the point of the crossing so that joints are equidistant and as far as possible from the water line.

3.2.2.1.3 Sanitary Sewer Manholes

No water piping shall pass through or come in contact with any part of a sanitary sewer manhole.

3.2.2.2 Earthwork

Perform earthwork operations in accordance with Section 31 23 00.00 20 EXCAVATION AND FILL.

3.2.2.3 Pipe Laying and Jointing

Inspect each pipe and fitting before and after installation; replace those found defective and remove from site. Provide proper facilities for lowering sections of pipe into trenches. Lay nonpressure pipe with the bell or groove ends in the upgrade direction. Adjust spigots in bells and tongues in grooves to give a uniform space all around. Blocking or wedging between bells and spigots or tongues and grooves will not be permitted. Replace by one of the proper dimensions, pipe or fittings that do not allow sufficient space for installation of joint material. At the end of each work day, close open ends of pipe temporarily with wood blocks or bulkheads. Provide batterboards not more than 25 feet apart in trenches for checking and ensuring that pipe invert elevations are as indicated. Laser beam method may be used in lieu of batterboards for the same purpose. Construct branch connections by use of regular fittings or solvent cemented saddles as approved. Provide saddles for PVC pipe conforming to Table 4 of ASTM D3034.

3.2.3 Special Requirements

3.2.3.1 Installation of Clay Piping

Install pipe and fittings in accordance with paragraph entitled "General Requirements for Installation of Pipelines" of this section and with the requirements of ASTM C12 for pipe laying. Make joints with a compression joint material specified for clay pipe joints and assemble in accordance with the recommendations of the manufacturer of the pipe.

3.2.3.2 Installation of Concrete Gravity Sewer Piping

Install pipe and fittings in accordance with paragraph entitled "General Requirements for Installation of Pipelines" of this section and with the provisions for rubber gasket jointing and jointing procedures of ACPA 01-103 or of ACPA 01-102, Chapter 9, "Installation, Inspection and Construction Testing." Make joints with the gaskets specified for concrete gravity sewer pipe joints. Clean and dry surfaces receiving lubricants, cements, or adhesives. Affix gaskets to pipe not more than 24 hours prior to the installation of the pipe. Protect gaskets from sun, blowing dust, and other deleterious agents at all times. Before installation of the pipe, inspect gaskets and remove and replace loose or improperly affixed gaskets. Align each pipe section with the previously installed pipe section, and pull the joint together. If, while pulling the joint, the gasket becomes loose and can be seen through the exterior joint recess when the pipe is pulled up to within 1 inch of closure, remove the pipe and remake the joint.

3.2.3.3 Installation of Ductile Iron Gravity Sewer Pipe

Unless otherwise specified, install pipe and associated fittings in accordance with paragraph entitled "General Requirements for Installation of Pipelines" of this section and with the requirements of AWWA C600 for pipe installation and joint assembly.

a. Make push-on joints with the gaskets and lubricant specified for this type joint and assemble in accordance with the applicable requirements of AWWA C600 for joint assembly. Make mechanical-joints with the gaskets, glands, bolts, and nuts specified for this type joint and assemble in accordance with the applicable requirements of AWWA C600 for joint assembly and the recommendations of Appendix A to AWWA C111/A21.11.

3.2.3.4 Installation of PVC Piping

Install pipe and fittings in accordance with paragraph entitled "General Requirements for Installation of Pipelines" of this section and with the requirements of ASTM D2321 for laying and joining pipe and fittings. Make joints with the gaskets specified for joints with this piping and assemble in accordance with the requirements of ASTM D2321 for assembly of joints. Make joints to other pipe materials in accordance with the recommendations of the plastic pipe manufacturer.

3.2.3.5 Installation of PVC Pressure Pipe

Unless otherwise specified, install pipe and fittings in accordance with AWWA C605. AWWA C605 includes requirements such as excavation,

installation, and placement of apputenances.

3.2.3.5.1 Pipe Less Than 4 Inch Diameter

3.2.3.5.1.1 Threaded Joints

Make by wrapping the male threads with joint tape or by applying an approved thread lubricant, then threading the joining members together. Tighten the joints with strap wrenches which will not damage the pipe and fittings. Tighten the joint no more than 2 threads past hand-tight.

3.2.3.5.1.2 Push-On Joints

Bevel the ends of pipe for push-on joints to facilitate assembly. Mark pipe to indicate when the pipe is fully seated. Lubricate the gasket to prevent displacement. Exercise care to ensure that the gasket remains in proper position in the bell or coupling while making the joint.

3.2.3.5.1.3 Solvent-Weld Joints

Comply with the manufacturer's instructions.

3.2.3.5.2 Pipe 4 inch Diameter And Larger

Make push-on joints with AWWA C900 pipe with intrgral elastomeric gasket . For pipe-to-pipe push-on joint connections, use only pipe with push-on joint ends having factory-made bevel. For push-on joint connections to fittings, use cut spigot end of pipe off square, marked to match the manufacturer's insertion line and beveled to match factory supplied bevel. . Use an approved lubricant recommended by the pipe manufacturer for push-on joints. Assemble push-on joints for pipe-to-pipe joint connections in accordance with the requirements of AWWA C605. Assemble push-on joints for connection to fittings in accordance with the requirements of AWWA C605 for joining PVC pipe to fittings and accessories and with the applicable requirements of AWWA C600 for joint assembly. Make mechanical-joints or flanged jointswith the gaskets, glands, bolts, nuts, and internal stiffeners specified for this type joint and assemble in accordance with the requirements of AWWA C605 for joining PVC pipe to fittings and accessories or with the applicable requirements of AWWA C600 for ductile iron joint assembly, and with the recommendations of Appendix A to AWWA C111/A21.11. Cut off spigot end of pipe for mechanical-joint or flanged jointconnections and do not bevel.

3.2.3.5.3 Pipe Anchorage

Provide concrete thrust blocks (reaction backing) for pipe anchorage. Size and position thrust blocks as indicated. Use concrete conforming to ASTM C94/C94M having a minimum compressive strength of 2,000 psi at 28 days; or use concrete of a mix not leaner than one part cement, 2 1/2 parts sand, and 5 parts gravel, having the same minimum compressive strength.

3.2.3.6 Pipeline Installation Beneath Railroad Right-of-Way

Where pipeline passes under the right-of-way of a commercial railroad, install piping in accordance with the specifications for pipelines conveying nonflammable substances in AREMA Eng Man.

3.2.4 Concrete Work

Cast-in-place concrete is included in Section 03 30 00 CAST-IN-PLACE CONCRETE. Support the pipe on a concrete cradle, or encased in concrete where indicated or directed.

3.2.5 Manhole Construction

Construct base slab of cast-in-place concrete or use precast concrete base sections. Make inverts in cast-in-place concrete and precast concrete bases with a smooth-surfaced semi-circular bottom conforming to the inside contour of the adjacent sewer sections. For changes in direction of the sewer and entering branches into the manhole, make a circular curve in the manhole invert of as large a radius as manhole size will permit. For cast-in-place concrete construction, either pour bottom slabs and walls integrally or key and bond walls to bottom slab. No parging will be permitted on interior manhole walls. For precast concrete construction, make joints between manhole sections with the gaskets specified for this purpose; install in the manner specified for installing joints in concrete piping. Parging will not be required for precast concrete manholes. Perform cast-in-place concrete work in accordance with the requirements specified under paragraph entitled "Concrete Work" of this section. Make joints between concrete manholes and pipes entering manholes with the resilient connectors specified for this purpose; install in accordance with the recommendations of the connector manufacturer. Where a new manhole is constructed on an existing line, remove existing pipe as necessary to construct the manhole. Cut existing pipe so that pipe ends are approximately flush with the interior face of manhole wall, but not protruding into the manhole. Use resilient connectors as previously specified for pipe connectors to concrete manholes.

3.2.6 Miscellaneous Construction and Installation

3.2.6.1 Connecting to Existing Manholes

Connect pipe to existing manholes such that finish work will conform as nearly as practicable to the applicable requirements specified for new manholes, including all necessary concrete work, cutting, and shaping. Center the connection on the manhole. Holes for the new pipe are be of sufficient diameter to allow packing cement mortar around the entire periphery of the pipe but no larger than 1.5 times the diameter of the pipe. Cut the manhole in a manner that will cause the least damage to the walls.

3.2.6.2 Metal Work

3.2.6.2.1 Workmanship and Finish

Perform metal work so that workmanship and finish will be equal to the best practice in modern structural shops and foundries. Form iron to shape and size with sharp lines and angles. Do shearing and punching so that clean true lines and surfaces are produced. Make castings sound and free from warp, cold shuts, and blow holes that may impair their strength or appearance. Give exposed surfaces a smooth finish with sharp well-defined lines and arises. Provide necessary rabbets, lugs, and brackets wherever necessary for fitting and support.

3.2.6.2.2 Field Painting

After installation, clean cast-iron frames, covers, gratings, and steps

not buried in concrete to bare metal, remove mortar, rust, grease, dirt, and other deleterious materials and apply a coat of bituminous paint. Do not paint surfaces subject to abrasion.

3.2.7 Installations of Wye Branches

Install wye branches in an existing sewer using a method which does not damage the integrity of the existing sewer. Do not cutinto piping for connections except when approved by the Contracting Officer. When the connecting pipe cannot be adequately supported on undisturbed earth or tamped backfill, support on a concrete cradle as directed by the Contracting Officer. Provide and install concrete required because of conditions resulting from faulty construction methods or negligence without any additional cost to the Government. Do not damage the existing sewer when installing wye branches in an existing sewer.

3.3 FIELD QUALITY CONTROL

The Contracting Officer will conduct field inspections and witness field tests specified in this section. Be able to produce evidence, when required, that each item of work has been constructed in accordance with the drawings and specifications.

3.3.1 Tests

Perform field tests and provide labor, equipment, and incidentals required for testing, except that water and electric power needed for field tests will be furnished as set forth in Section 01 50 00 TEMPORARY CONSTRUCTION FACILITY AND CONTROLS.

3.3.1.1 Leakage Tests for Nonpressure Lines

Test lines for leakage by either infiltration tests and exfiltration tests, negative air pressure tests or by low-pressure air tests. When necessary to prevent pipeline movement during testing, place additional backfill around pipe sufficient to prevent movement, but leaving joints uncovered to permit inspection. When leakage or pressure drop exceeds the allowable amount specified, make satisfactory correction and retest pipeline section in the same manner. Correct visible leaks regardless of leakage test results.

3.3.1.1.1 Infiltration Tests and Exfiltration Tests

3.3.1.1.1.1 Precast Concrete Pipe Sewer Lines

Test leakage of precast concrete pipe in accordance with ASTM C969. The allowable leakage limit is located in ASTM C969. Make calculations in accordance with the Appendix to ASTM C969.

3.3.1.1.2 Negative Air Pressure Test

3.3.1.1.2.1 Concrete Pipe

Test concrete pipe test in accordance with ASTM C1214. The allowable vacuum loss is located in ASTM C1214 Make calculations in accordance with the Appendix to ASTM C1214.

3.3.1.1.2.2 Precast Concrete Manholes

Test precast concrete sewer manhole test in accordance with ASTM C1244. The allowable vacuum drop is located in ASTM C1244 Make calculations in accordance with the Appendix to ASTM C1244.

3.3.1.1.3 Low-Pressure Air Tests

3.3.1.1.3.1 Clay Pipelines

Test clay pipe in accordance with ASTM C828. The allowable pressure drop is located in ASTM C828. Make calculations in accordance with the Appendix to ASTM C828.

3.3.1.1.3.2 PVC Pipelines

Test PVC pipe in accordance with UBPPA UNI-B-6. The allowable pressure drop is located in UBPPA UNI-B-6. Make calculations in accordance with the Appendix to UBPPA UNI-B-6.

3.3.1.2 Smoke Test

Perform a smoke test on the relevant portion of the sewer system. Test results are to be noted in the daily Construction Quality Control (CQC) as required in 01 45 00.00 20 Quality Control.

a. Continue testing until it can be visually confirmed that the projects sanitary sewer point of connection has not been cross-connected to the storm drainage system.

b. During the test, monitor the storm drainage system, either manholes or outfalls, for any sign of cross-connection.

3.3.2 Field Tests for Cast-In-Place Concrete

Field testing requirements are covered in Section 03 30 00 CAST-IN-PLACE CONCRETE

3.3.3 Inspection

Check each straight run of pipeline for gross deficiencies by holding a light in a manhole; the light must show a practically full circle of light through the pipeline when viewed from the adjoining end of line.

3.3.3.1 Pre-Installation Inspection

Prior to connecting the new service, perform pre-installation inspection after trenching and layout is complete. Submit pre-installation inspection request for field support at least 14 days in advance. The Installation's Utilities Field Support personnel will perform the pre-installation inspection.

3.3.3.2 Post-Installation Inspection

Perform a post-installation inspection after connection has been made and before the connection is buried. Submit post-installation inspection request for field support at least 14 days in advance. The Installation's Utilities Field Support personnel will perform the post-connection inspection. During the post-installation inspection the Contractor will be responsible for performing a dye test or smoke test.

-- End of Section --

SECTION 33 40 00

STORM DRAINAGE UTILITIES
02/10

PART 1 GENERAL

1.1 REFERENCES

The publications listed below form a part of this specification to the extent referenced. The publications are referred to within the text by the basic designation only.

AMERICAN ASSOCIATION OF STATE HIGHWAY AND TRANSPORTATION OFFICIALS (AASHTO)

AASHTO MP 20	(2013; R 2017) Standard Specification for Steel-Reinforced Polyethylene (PE) Ribbed Pipe, 300- to 1500-mm (12- to 60-in) Diameter

AMERICAN CONCRETE INSTITUTE (ACI)

ACI 346	(2009) Specification for Cast-in-Place Concrete Pipe

AMERICAN RAILWAY ENGINEERING AND MAINTENANCE-OF-WAY ASSOCIATION (AREMA)

AREMA Eng Man	(2017) Manual for Railway Engineering

ASTM INTERNATIONAL (ASTM)

ASTM A48/A48M	(2003; R 2012) Standard Specification for Gray Iron Castings
ASTM A123/A123M	(2017) Standard Specification for Zinc (Hot-Dip Galvanized) Coatings on Iron and Steel Products
ASTM A536	(1984; R 2014) Standard Specification for Ductile Iron Castings
ASTM A929/A929M	(2018) Standard Specification for Steel Sheet, Metallic-Coated by the Hot-Dip Process for Corrugated Steel Pipe
ASTM B26/B26M	(2014; E 2015) Standard Specification for Aluminum-Alloy Sand Castings
ASTM C14	(2015) Standard Specification for Concrete Sewer, Storm Drain, and Culvert Pipe
ASTM C32	(2013; R 2017) Standard Specification for Sewer and Manhole Brick (Made from Clay or Shale)

ASTM C55	(2017) Standard Specification for Concrete Building Brick
ASTM C62	(2017) Standard Specification for Building Brick (Solid Masonry Units Made from Clay or Shale)
ASTM C76	(2019) Standard Specification for Reinforced Concrete Culvert, Storm Drain, and Sewer Pipe
ASTM C139	(2017) Standard Specification for Concrete Masonry Units for Construction of Catch Basins and Manholes
ASTM C231/C231M	(2017a) Standard Test Method for Air Content of Freshly Mixed Concrete by the Pressure Method
ASTM C270	(2019) Standard Specification for Mortar for Unit Masonry
ASTM C425	(2004; R 2013) Standard Specification for Compression Joints for Vitrified Clay Pipe and Fittings
ASTM C443	(2012; R 2017) Standard Specification for Joints for Concrete Pipe and Manholes, Using Rubber Gaskets
ASTM C478	(2018) Standard Specification for Circular Precast Reinforced Concrete Manhole Sections
ASTM C506	(2016a) Standard Specification for Reinforced Concrete Arch Culvert, Storm Drain, and Sewer Pipe
ASTM C507	(2018) Standard Specification for Reinforced Concrete Elliptical Culvert, Storm Drain, and Sewer Pipe
ASTM C655	(2014) Reinforced Concrete D-Load Culvert, Storm Drain, and Sewer Pipe
ASTM C877	(2008) External Sealing Bands for Concrete Pipe, Manholes, and Precast Box Sections
ASTM C923	(2008; R 2013; E 2016) Standard Specification for Resilient Connectors Between Reinforced Concrete Manhole Structures, Pipes and Laterals
ASTM C969	(2019) Standard Practice for Infiltration and Exfiltration Acceptance Testing of Installed Precast Concrete Pipe Sewer Lines
ASTM C990	(2009; R 2014) Standard Specification for Joints for Concrete Pipe, Manholes and

	Precast Box Sections Using Preformed Flexible Joint Sealants
ASTM C1103	(2019) Standard Practice for Joint Acceptance Testing of Installed Precast Concrete Pipe Sewer Lines
ASTM C1433	(2016b) Standard Specification for Precast Reinforced Concrete Monolithic Box Sections for Culverts, Storm Drains, and Sewers
ASTM D1056	(2014) Standard Specification for Flexible Cellular Materials - Sponge or Expanded Rubber
ASTM D1171	(2016; E 2016) Standard Test Method for Rubber Deterioration - Surface Ozone Cracking Outdoors (Triangular Specimens)
ASTM D1557	(2012; E 2015) Standard Test Methods for Laboratory Compaction Characteristics of Soil Using Modified Effort (56,000 ft-lbf/ft3) (2700 kN-m/m3)
ASTM D1751	(2004; E 2013; R 2013) Standard Specification for Preformed Expansion Joint Filler for Concrete Paving and Structural Construction (Nonextruding and Resilient Bituminous Types)
ASTM D1752	(2018) Standard Specification for Preformed Sponge Rubber, Cork and Recycled PVC Expansion Joint Fillers for Concrete Paving and Structural Construction
ASTM D2167	(2015) Density and Unit Weight of Soil in Place by the Rubber Balloon Method
ASTM D3212	(2007; R 2013) Standard Specification for Joints for Drain and Sewer Plastic Pipes Using Flexible Elastomeric Seals
ASTM D6938	(2017a) Standard Test Method for In-Place Density and Water Content of Soil and Soil-Aggregate by Nuclear Methods (Shallow Depth)
ASTM F2562/F2562M	(2015) Specification for Steel Reinforced Thermoplastic Ribbed Pipe and Fittings for Non-Pressure Drainage and Sewerage

1.2 SUBMITTALS

Government approval is required for submittals with a "G" designation; submittals not having a "G" designation are for Contractor Quality Control approval. Submittals with an "S" are for inclusion in the Sustainability eNotebook, in conformance to Section 01 33 29 SUSTAINABILITY REPORTING. Submit the following in accordance with Section 01 33 00 SUBMITTAL

PROCEDURES:

SD-04 Samples

Pipe for Culverts and Storm Drains

SD-07 Certificates

Resin Certification

Oil Resistant Gasket

Leakage Test

Hydrostatic Test on Watertight Joints

Determination of Density

Frame and Cover for Gratings

Post-Installation Inspection Report

SD-08 Manufacturer's Instructions

Placing Pipe

SD-11 Closeout Submittals

Lid Verification Report; G

1.3 DELIVERY, STORAGE, AND HANDLING

1.3.1 Delivery and Storage

Materials delivered to site shall be inspected for damage, unloaded, and stored with a minimum of handling. Materials shall not be stored directly on the ground. The inside of pipes and fittings shall be kept free of dirt and debris. Before, during, and after installation, plastic pipe and fittings shall be protected from any environment that would result in damage or deterioration to the material. Keep a copy of the manufacturer's instructions available at the construction site at all times and follow these instructions unless directed otherwise by the Contracting Officer. Solvents, solvent compounds, lubricants, elastomeric gaskets, and any similar materials required to install plastic pipe shall be stored in accordance with the manufacturer's recommendations and shall be discarded if the storage period exceeds the recommended shelf life. Solvents in use shall be discarded when the recommended pot life is exceeded.

1.3.2 Handling

Materials shall be handled in a manner that ensures delivery to the trench in sound, undamaged condition. Pipe shall be carried to the trench, not dragged.

PART 2 PRODUCTS

2.1 PIPE FOR CULVERTS AND STORM DRAINS

Pipe for culverts and storm drains shall be of the sizes indicated and shall conform to the requirements specified.

2.1.1 Concrete Pipe

Manufactured in accordance with and conforming to ASTM C76, Class III , or ASTM C655, D-Load.

2.1.1.1 Reinforced Arch Culvert and Storm Drainpipe

Manufactured in accordance with and conforming to ASTM C506, Class A-III .

2.1.1.2 Reinforced Elliptical Culvert and Storm Drainpipe

Manufactured in accordance with and conforming to ASTM C507. Horizontal elliptical pipe shall be Class HE-III . Vertical elliptical pipe shall be Class VE-IV .

2.1.1.3 Nonreinforced Pipe

Manufactured in accordance with and conforming to ASTM C14, Class 3.

2.1.1.4 Cast-In-Place Nonreinforced Conduit

ACI 346, except that testing shall be the responsibility of and at the expense of the Contractor. In the case of other conflicts between ACI 346 and project specifications, requirements of ACI 346 shall govern.

2.1.2 Steel Reinforced Polyethylene (SRPE) Pipe

SRPE pipe will meet the requirements of ASTM F2562/F2562M 8 - 120 inch diameter pipe and AASHTO MP 20 (12 - 60 inch diameter pipe).

2.2 PERFORATED PIPING

2.2.1 Polyvinyl Chloride (PVC) Pipe.

2.3 DRAINAGE STRUCTURES

2.3.1 Flared End Sections

Sections shall be of a standard design fabricated from zinc coated steel sheets meeting requirements of ASTM A929/A929M.

2.3.2 Precast Reinforced Concrete Box

Manufactured in accordance with and conforming to ASTM C1433.

2.4 MISCELLANEOUS MATERIALS

2.4.1 Concrete

Unless otherwise specified, concrete and reinforced concrete shall conform to the requirements for 4000 psi concrete under Section 03 30 00 CAST-IN-PLACE CONCRETE. The concrete mixture shall have air content by volume of concrete, based on measurements made immediately after discharge from the mixer, of 5 to 7 percent when maximum size of coarse aggregate

exceeds 1-1/2 inches. Air content shall be determined in accordance with ASTM C231/C231M. The concrete covering over steel reinforcing shall not be less than 1 inch thick for covers and not less than 1-1/2 inches thick for walls and flooring. Concrete covering deposited directly against the ground shall have a thickness of at least 3 inches between steel and ground. Expansion-joint filler material shall conform to ASTM D1751, or ASTM D1752, or shall be resin-impregnated fiberboard conforming to the physical requirements of ASTM D1752.

2.4.2 Mortar

Mortar for pipe joints, connections to other drainage structures, and brick or block construction shall conform to ASTM C270, Type M, except that the maximum placement time shall be 1 hour. The quantity of water in the mixture shall be sufficient to produce a stiff workable mortar but in no case shall exceed 7 gallons of water per sack of cement. Water shall be clean and free of harmful acids, alkalis, and organic impurities. The mortar shall be used within 30 minutes after the ingredients are mixed with water. The inside of the joint shall be wiped clean and finished smooth. The mortar head on the outside shall be protected from air and sun with a proper covering until satisfactorily cured.

2.4.3 Precast Concrete Segmental Blocks

Precast concrete segmental block shall conform to ASTM C139, not more than 8 inches thick, not less than 8 inches long, and of such shape that joints can be sealed effectively and bonded with cement mortar.

2.4.4 Brick

Brick shall conform to ASTM C62, Grade SW; ASTM C55, Grade S-I or S-II; or ASTM C32, Grade MS. Mortar for jointing and plastering shall consist of one part portland cement and two parts fine sand. Lime may be added to the mortar in a quantity not more than 25 percent of the volume of cement. The joints shall be filled completely and shall be smooth and free from surplus mortar on the inside of the structure. Brick structures shall be plastered with 1/2 inch of mortar over the entire outside surface of the walls. For square or rectangular structures, brick shall be laid in stretcher courses with a header course every sixth course. For round structures, brick shall be laid radially with every sixth course a stretcher course.

2.4.5 Precast Reinforced Concrete Manholes

Conform to ASTM C478. Joints between precast concrete risers and tops shall be made with flexible watertight, rubber-type gaskets meeting the requirements of paragraph JOINTS.

2.4.6 Prefabricated Corrugated Metal Manholes

Manholes shall be of the type and design recommended by the manufacturer. Manholes shall be complete with frames and cover, or frames and gratings.

2.4.7 Frame and Cover for Gratings

Submit certification on the ability of frame and cover or gratings to carry the imposed live load. Frame and cover for gratings shall be cast gray iron, ASTM A48/A48M, Class 35B; cast ductile iron, ASTM A536, Grade 65-45-12; or cast aluminum, ASTM B26/B26M, Alloy 356.O-T6. Weight, shape,

size, and waterway openings for grates and curb inlets shall be as indicated on the plans. The word "Storm Sewer" shall be stamped or cast into covers so that it is plainly visible.

2.4.8 Joints

2.4.8.1 Flexible Watertight Joints

a. Flexible watertight joints shall be made with plastic or rubber-type gaskets for concrete pipe and with factory-fabricated resilient materials for clay pipe. The design of joints and the physical requirements for preformed flexible joint sealants shall conform to ASTM C990, and rubber-type gaskets shall conform to ASTM C443. Factory-fabricated resilient joint materials shall conform to ASTM C425. Gaskets shall have not more than one factory-fabricated splice, except that two factory-fabricated splices of the rubber-type gasket are permitted if the nominal diameter of the pipe being gasketed exceeds 54 inches.

b. Rubber gaskets shall comply with the oil resistant gasket requirements of ASTM C443. Certified copies of test results shall be delivered to the Contracting Officer before gaskets or jointing materials are installed. Alternate types of watertight joint may be furnished, if specifically approved.

2.4.8.2 External Sealing Bands

Requirements for external sealing bands shall conform to ASTM C877.

2.4.8.3 Flexible Watertight, Gasketed Joints

a. Gaskets: When infiltration or exfiltration is a concern for pipe lines, the couplings may be required to have gaskets. The closed-cell expanded rubber gaskets shall be a continuous band approximately 7 inches wide and approximately 3/8 inch thick, meeting the requirements of ASTM D1056, Type 2 A1 , and shall have a quality retention rating of not less than 70 percent when tested for weather resistance by ozone chamber exposure, Method B of ASTM D1171. Rubber O-ring gaskets shall be 13/16 inch in diameter for pipe diameters of 36 inches or smaller and 7/8 inch in diameter for larger pipe having 1/2 inch deep end corrugation. Rubber O-ring gaskets shall be 1-3/8 inches in diameter for pipe having 1 inch deep end corrugations. O-rings shall meet the requirements of ASTM C990 or ASTM C443. Preformed flexible joint sealants shall conform to ASTM C990, Type B.

b. Connecting Bands: Connecting bands shall be of the type, size and sheet thickness of band, and the size of angles, bolts, rods and lugs as indicated or where not indicated as specified in the applicable standards or specifications for the pipe. Exterior rivet heads in the longitudinal seam under the connecting band shall be countersunk or the rivets shall be omitted and the seam welded. Watertight joints shall be tested and shall meet the test requirements of paragraph HYDROSTATIC TEST ON WATERTIGHT JOINTS.

2.4.8.4 Steel Reinforced Polyethylene (SRPE) Pipe

SRPE joints shall meet the requirements of ASTM D3212.

2.5 STEEL LADDER

Steel ladder shall be provided where the depth of the storm drainage structure exceeds 12 feet. These ladders shall be not less than 16 inches in width, with 3/4 inch diameter rungs spaced 12 inches apart. The two stringers shall be a minimum 3/8 inch thick and 2-1/2 inches wide. Ladders and inserts shall be galvanized after fabrication in conformance with ASTM A123/A123M.

2.6 RESILIENT CONNECTORS

Flexible, watertight connectors used for connecting pipe to manholes and inlets shall conform to ASTM C923.

2.7 EROSION CONTROL RIP RAP

Provide non-erodible rock not exceeding 15 inches in its greatest dimension and choked with sufficient small rocks to provide a dense mass with a minimum thickness of 8 inches .

PART 3 EXECUTION

3.1 INSTALLATION OF PIPE CULVERTS, STORM DRAINS, AND DRAINAGE STRUCTURES

Excavation of trenches, and for appurtenances and backfilling for culverts and storm drains, shall be in accordance with the applicable portions of Section , 31 23 00.00 20 EXCAVATION AND FILL and the requirements specified below.

3.1.1 Trenching

The width of trenches at any point below the top of the pipe shall be not greater than the outside diameter of the pipe plus 36 inches to permit satisfactory jointing and thorough tamping of the bedding material under and around the pipe. Sheeting and bracing, where required, shall be placed within the trench width as specified, without any overexcavation. Where trench widths are exceeded, redesign with a resultant increase in cost of stronger pipe or special installation procedures will be necessary. Cost of this redesign and increased cost of pipe or installation shall be borne by the Contractor without additional cost to the Government.

3.1.2 Removal of Rock

Rock in either ledge or boulder formation shall be replaced with suitable materials to provide a compacted earth cushion having a thickness between unremoved rock and the pipe of at least 8 inches or 1/2 inch for each foot of fill over the top of the pipe, whichever is greater, but not more than three-fourths the nominal diameter of the pipe. Where bell-and-spigot pipe is used, the cushion shall be maintained under the bell as well as under the straight portion of the pipe. Rock excavation shall be as specified and defined in Section 31 23 00.00 20 EXCAVATION AND FILL .

3.1.3 Removal of Unstable Material

Where wet or otherwise unstable soil incapable of properly supporting the pipe, as determined by the Contracting Officer, is unexpectedly encountered in the bottom of a trench, such material shall be removed to the depth required and replaced to the proper grade with select granular material, compacted as provided in paragraph BACKFILLING. When removal of

unstable material is due to the fault or neglect of the Contractor while performing shoring and sheeting, water removal, or other specified requirements, such removal and replacement shall be performed at no additional cost to the Government.

3.2 BEDDING

The bedding surface for the pipe shall provide a firm foundation of uniform density throughout the entire length of the pipe.

3.2.1 Concrete Pipe Requirements

When no bedding class is specified or detailed on the drawings, concrete pipe shall be bedded in granular material minimum 4 inch in depth in trenches with soil foundation. Depth of granular bedding in trenches with rock foundation shall be 1/2 inch in depth per foot of depth of fill, minimum depth of bedding shall be 8 inch up to maximum depth of 24 inches. The middle third of the granular bedding shall be loosely placed. Bell holes and depressions for joints shall be removed and formed so entire barrel of pipe is uniformly supported. The bell hole and depressions for the joints shall be not more than the length, depth, and width required for properly making the particular type of joint.

3.3 PLACING PIPE

Each pipe shall be thoroughly examined before being laid; defective or damaged pipe shall not be used. Pipelines shall be laid to the grades and alignment indicated. Proper facilities shall be provided for lowering sections of pipe into trenches. Lifting lugs in vertically elongated pipe shall be placed in the same vertical plane as the major axis of the pipe. Pipe shall not be laid in water, and pipe shall not be laid when trench conditions or weather are unsuitable for such work. Diversion of drainage or dewatering of trenches during construction shall be provided as necessary. Deflection of installed flexible pipe shall not exceed the following limits:

TYPE OF PIPE	MAXIMUM ALLOWABLE DEFLECTION (percent)

Note post installation requirements of paragraph DEFLECTION TESTING in PART 3 of this specification for all pipe products including deflection testing requirements for flexible pipe.

3.3.1 Concrete, Clay, PVC, Ribbed PVC, Ductile Iron and Cast-Iron Pipe

Laying shall proceed upgrade with spigot ends of bell-and-spigot pipe and tongue ends of tongue-and-groove pipe pointing in the direction of the flow.

3.3.2 Elliptical and Elliptical Reinforced Concrete Pipe

The manufacturer's reference lines, designating the top of the pipe, shall be within 5 degrees of a vertical plane through the longitudinal axis of the pipe, during placement. Damage to or misalignment of the pipe shall be prevented in all backfilling operations.

3.3.3 Multiple Culverts

Where multiple lines of pipe are installed, adjacent sides of pipe shall be at least half the nominal pipe diameter or 3 feet apart, whichever is less.

3.3.4 Jacking Pipe Through Fills

Methods of operation and installation for jacking pipe through fills shall conform to requirements specified in Volume 1, Chapter 1, Part 4 of AREMA Eng Man.

3.4 JOINTING

3.4.1 Concrete and Clay Pipe

3.4.1.1 Cement-Mortar Bell-and-Spigot Joint

The first pipe shall be bedded to the established grade line, with the bell end placed upstream. The interior surface of the bell shall be thoroughly cleaned with a wet brush and the lower portion of the bell filled with mortar as required to bring inner surfaces of abutting pipes flush and even. The spigot end of each subsequent pipe shall be cleaned with a wet brush and uniformly matched into a bell so that sections are closely fitted. After each section is laid, the remainder of the joint shall be filled with mortar, and a bead shall be formed around the outside of the joint with sufficient additional mortar. If mortar is not sufficiently stiff to prevent appreciable slump before setting, the outside of the joint shall be wrapped or bandaged with cheesecloth to hold mortar in place.

3.4.1.2 Cement-Mortar Oakum Joint for Bell-and-Spigot Pipe

A closely twisted gasket shall be made of jute or oakum of the diameter required to support the spigot end of the pipe at the proper grade and to make the joint concentric. Joint packing shall be in one piece of sufficient length to pass around the pipe and lap at top. This gasket shall be thoroughly saturated with neat cement grout. The bell of the pipe shall be thoroughly cleaned with a wet brush, and the gasket shall be laid in the bell for the lower third of the circumference and covered with mortar. The spigot of the pipe shall be thoroughly cleaned with a wet brush, inserted in the bell, and carefully driven home. A small amount of mortar shall be inserted in the annular space for the upper two-thirds of the circumference. The gasket shall be lapped at the top of the pipe and driven home in the annular space with a caulking tool. The remainder of the annular space shall be filled completely with mortar and beveled at an angle of approximately 45 degrees with the outside of the bell. If mortar is not sufficiently stiff to prevent appreciable slump before setting, the outside of the joint thus made shall be wrapped with cheesecloth. Placing of this type of joint shall be kept at least five joints behind laying operations.

3.4.1.3 Cement-Mortar Diaper Joint for Bell-and-Spigot Pipe

The pipe shall be centered so that the annular space is uniform. The annular space shall be caulked with jute or oakum. Before caulking, the inside of the bell and the outside of the spigot shall be cleaned.

a. Diaper Bands: Diaper bands shall consist of heavy cloth fabric to hold grout in place at joints and shall be cut in lengths that extend one-eighth of the circumference of pipe above the spring line on one side of the pipe and up to the spring line on the other side of the pipe. Longitudinal edges of fabric bands shall be rolled and stitched around two pieces of wire. Width of fabric bands shall be such that after fabric has been securely stitched around both edges on wires, the wires will be uniformly spaced not less than 8 inches apart. Wires shall be cut into lengths to pass around pipe with sufficient extra length for the ends to be twisted at top of pipe to hold the band securely in place; bands shall be accurately centered around lower portion of joint.

b. Grout: Grout shall be poured between band and pipe from the high side of band only, until grout rises to the top of band at the spring line of pipe, or as nearly so as possible, on the opposite side of pipe, to ensure a thorough sealing of joint around the portion of pipe covered by the band. Silt, slush, water, or polluted mortar grout forced up on the lower side shall be forced out by pouring, and removed.

c. Remainder of Joint: The remaining unfilled upper portion of the joint shall be filled with mortar and a bead formed around the outside of this upper portion of the joint with a sufficient amount of additional mortar. The diaper shall be left in place. Placing of this type of joint shall be kept at least five joints behind actual laying of pipe. No backfilling around joints shall be done until joints have been fully inspected and approved.

3.4.1.4 Cement-Mortar Tongue-and-Groove Joint

The first pipe shall be bedded carefully to the established grade line with the groove upstream. A shallow excavation shall be made underneath the pipe at the joint and filled with mortar to provide a bed for the pipe. The grooved end of the first pipe shall be thoroughly cleaned with a wet brush, and a layer of soft mortar applied to the lower half of the groove. The tongue of the second pipe shall be cleaned with a wet brush; while in horizontal position, a layer of soft mortar shall be applied to the upper half of the tongue. The tongue end of the second pipe shall be inserted in the grooved end of the first pipe until mortar is squeezed out on interior and exterior surfaces. Sufficient mortar shall be used to fill the joint completely and to form a bead on the outside.

3.4.1.5 Cement-Mortar Diaper Joint for Tongue-and-Groove Pipe

The joint shall be of the type described for cement-mortar tongue-and-groove joint in this paragraph, except that the shallow excavation directly beneath the joint shall not be filled with mortar until after a gauze or cheesecloth band dipped in cement mortar has been wrapped around the outside of the joint. The cement-mortar bead at the joint shall be at least 1/2 inch, thick and the width of the diaper band shall be at least 8 inches. The diaper shall be left in place. Placing of this type of joint shall be kept at least five joints behind the actual laying of the pipe. Backfilling around the joints shall not be done until the joints have been fully inspected and approved.

3.4.1.6 Plastic Sealing Compound Joints for Tongue-and-Grooved Pipe

Sealing compounds shall follow the recommendation of the particular manufacturer in regard to special installation requirements. Surfaces to receive lubricants, primers, or adhesives shall be dry and clean. Sealing compounds shall be affixed to the pipe not more than 3 hours prior to installation of the pipe, and shall be protected from the sun, blowing dust, and other deleterious agents at all times. Sealing compounds shall be inspected before installation of the pipe, and any loose or improperly affixed sealing compound shall be removed and replaced. The pipe shall be aligned with the previously installed pipe, and the joint pulled together. If, while making the joint with mastic-type sealant, a slight protrusion of the material is not visible along the entire inner and outer circumference of the joint when the joint is pulled up, the pipe shall be removed and the joint remade. After the joint is made, all inner protrusions shall be cut off flush with the inner surface of the pipe. If non-mastic-type sealant material is used, the "Squeeze-Out" requirement above will be waived.

3.4.1.7 Flexible Watertight Joints

Gaskets and jointing materials shall be as recommended by the particular manufacturer in regard to use of lubricants, cements, adhesives, and other special installation requirements. Surfaces to receive lubricants, cements, or adhesives shall be clean and dry. Gaskets and jointing materials shall be affixed to the pipe not more than 24 hours prior to the installation of the pipe, and shall be protected from the sun, blowing dust, and other deleterious agents at all times. Gaskets and jointing materials shall be inspected before installing the pipe; any loose or improperly affixed gaskets and jointing materials shall be removed and replaced. The pipe shall be aligned with the previously installed pipe, and the joint pushed home. If, while the joint is being made the gasket becomes visibly dislocated the pipe shall be removed and the joint remade.

3.4.1.8 External Sealing Band Joint for Noncircular Pipe

Surfaces to receive sealing bands shall be dry and clean. Bands shall be installed in accordance with manufacturer's recommendations.

3.5 DRAINAGE STRUCTURES

3.5.1 Manholes and Inlets

Construction shall be of reinforced concrete, plain concrete, brick, precast reinforced concrete, precast concrete segmental blocks, prefabricated corrugated metal, or bituminous coated corrugated metal; complete with frames and covers or gratings; and with fixed galvanized steel ladders where indicated. Pipe studs and junction chambers of prefabricated corrugated metal manholes shall be fully bituminous-coated and paved when the connecting branch lines are so treated. Pipe connections to concrete manholes and inlets shall be made with flexible, watertight connectors.

3.5.2 Walls and Headwalls

Construction shall be as indicated.

3.6 STEEL LADDER INSTALLATION

Ladder shall be adequately anchored to the wall by means of steel inserts spaced not more than 6 feet vertically, and shall be installed to provide at least 6 inches of space between the wall and the rungs. The wall along the line of the ladder shall be vertical for its entire length.

3.7 BACKFILLING

3.7.1 Backfilling Pipe in Trenches

After the pipe has been properly bedded, selected material from excavation or borrow, at a moisture content that will facilitate compaction, shall be placed along both sides of pipe in layers not exceeding 6 inches in compacted depth. The backfill shall be brought up evenly on both sides of pipe for the full length of pipe. The fill shall be thoroughly compacted under the haunches of the pipe. Each layer shall be thoroughly compacted with mechanical tampers or rammers. This method of filling and compacting shall continue until the fill has reached an elevation equal to the midpoint (spring line) of concrete pipe or has reached an elevation of at least 12 inches above the top of the pipe for flexible pipe. The remainder of the trench shall be backfilled and compacted by spreading and rolling or compacted by mechanical rammers or tampers in layers not exceeding 6 inches. Tests for density shall be made as necessary to ensure conformance to the compaction requirements specified below. Where it is necessary, in the opinion of the Contracting Officer, that sheeting or portions of bracing used be left in place, the contract will be adjusted accordingly. Untreated sheeting shall not be left in place beneath structures or pavements.

3.7.2 Backfilling Pipe in Fill Sections

For pipe placed in fill sections, backfill material and the placement and compaction procedures shall be as specified below. The fill material shall be uniformly spread in layers longitudinally on both sides of the pipe, not exceeding 6 inches in compacted depth, and shall be compacted by rolling parallel with pipe or by mechanical tamping or ramming. Prior to commencing normal filling operations, the crown width of the fill at a height of 12 inches above the top of the pipe shall extend a distance of not less than twice the outside pipe diameter on each side of the pipe or 12 feet, whichever is less. After the backfill has reached at least 12 inches above the top of the pipe, the remainder of the fill shall be placed and thoroughly compacted in layers not exceeding 6 inches. Use select granular material for this entire region of backfill for flexible pipe installations.

3.7.3 Movement of Construction Machinery

When compacting by rolling or operating heavy equipment parallel with the pipe, displacement of or injury to the pipe shall be avoided. Movement of construction machinery over a culvert or storm drain at any stage of construction shall be at the Contractor's risk. Any damaged pipe shall be repaired or replaced.

3.7.4 Compaction

3.7.4.1 General Requirements

Cohesionless materials include gravels, gravel-sand mixtures, sands, and gravelly sands. Cohesive materials include clayey and silty gravels, gravel-silt mixtures, clayey and silty sands, sand-clay mixtures, clays,

silts, and very fine sands. When results of compaction tests for moisture-density relations are recorded on graphs, cohesionless soils will show straight lines or reverse-shaped moisture-density curves, and cohesive soils will show normal moisture-density curves.

3.7.4.2 Minimum Density

Backfill over and around the pipe and backfill around and adjacent to drainage structures shall be compacted at the approved moisture content to the following applicable minimum density, which will be determined as specified below.

a. Under airfield and heliport pavements, paved roads, streets, parking areas, and similar-use pavements including adjacent shoulder areas, the density shall be not less than 90 percent of maximum density for cohesive material and 95 percent of maximum density for cohesionless material, up to the elevation where requirements for pavement subgrade materials and compaction shall control.

b. Under unpaved or turfed traffic areas, density shall not be less than 90 percent of maximum density for cohesive material and 95 percent of maximum density for cohesionless material.

c. Under nontraffic areas, density shall be not less than that of the surrounding material.

3.8 FIELD PAINTING

3.8.1 Cast-Iron Covers, Frames, Gratings, And Steps

After installation, clean cast-iron, not buried in masonry or concrete, of mortar, rust, grease, dirt, and other deleterious materials to bare metal and apply a coat of bituminous paint.

3.9 FIELD QUALITY CONTROL

3.9.1 Tests

Testing is the responsibility of the Contractor. Perform all testing and retesting at no additional cost to the Government.

3.9.1.1 HYDROSTATIC TEST ON WATERTIGHT JOINTS

Watertight joints shall be tested and shall meet test requirements of paragraph HYDROSTATIC TEST ON WATERTIGHT JOINTS. Rubber gaskets shall comply with the oil resistant gasket requirements of ASTM C443. Certified copies of test results shall be delivered to the Contracting Officer before gaskets or jointing materials are installed.

3.9.1.1.1 Concrete, Clay, PVC, PE, SRPE and PP Pipe

A hydrostatic test shall be made on the watertight joint types as proposed. Only one sample joint of each type needs testing; however, if the sample joint fails because of faulty design or workmanship, an additional sample joint may be tested. During the test period, gaskets or other jointing material shall be protected from extreme temperatures which might adversely affect the performance of such materials. Performance requirements for joints in reinforced and nonreinforced concrete pipe

shall conform to ASTM C990 or ASTM C443. Test requirements for joints in clay pipe shall conform to ASTM C425. Test requirements for joints in PVC, PE, and PP plastic pipe shall conform to ASTM D3212.

3.9.1.2 Leakage Test

Lines shall be tested for leakage by low pressure air or water testing or exfiltration tests, as appropriate, prior to completing backfill. Low pressure air testing for concrete pipes shall conform to ASTM C969. Testing of individual joints for leakage by low pressure air or water shall conform to ASTM C1103. Prior to exfiltration tests, the trench shall be backfilled up to at least the lower half of the pipe. If required, sufficient additional backfill shall be placed to prevent pipe movement during testing, leaving the joints uncovered to permit inspection. Visible leaks encountered shall be corrected regardless of leakage test results. When the water table is 2 feet or more above the top of the pipe at the upper end of the pipeline section to be tested, infiltration shall be measured using a suitable weir or other device acceptable to the Contracting Officer. An exfiltration test shall be made by filling the line to be tested with water so that a head of at least 2 feet is provided above both the water table and the top of the pipe at the upper end of the pipeline to be tested. The filled line shall be allowed to stand until the pipe has reached its maximum absorption, but not less than 4 hours. After absorption, the head shall be reestablished. The amount of water required to maintain this water level during a 2-hour test period shall be measured. Leakage as measured by the exfiltration test shall not exceed 0.2 gallons per inch in diameter per 100 feet of pipeline per hour.

3.9.1.3 Determination of Density

Testing shall be performed by an approved commercial testing laboratory or by the Contractor subject to approval. Tests shall be performed in sufficient number to ensure that specified density is being obtained. Laboratory tests for moisture-density relations shall be made in accordance with ASTM D1557 except that mechanical tampers may be used provided the results are correlated with those obtained with the specified hand tamper. Field density tests shall be determined in accordance with ASTM D2167 or ASTM D6938. When ASTM D6938 is used, the calibration curves shall be checked and adjusted, if necessary, using the sand cone method as described in paragraph Calibration of the referenced publications. ASTM D6938 results in a wet unit weight of soil and ASTM D6938 shall be used to determine the moisture content of the soil. The calibration curves furnished with the moisture gauges shall be checked along with density calibration checks as described in ASTM D6938. Test results shall be furnished the Contracting Officer. The calibration checks of both the density and moisture gauges shall be made at the beginning of a job on each different type of material encountered and at intervals as directed.

3.9.1.4 Deflection Testing

Conduct deflection test no sooner than 30 days after completion of final backfill and compaction testing. Clean or flush all lines prior to testing. Perform a deflection test on entire length of installed flexible pipeline upon completion of work adjacent to and over the pipeline, including backfilling, placement of fill, grading, paving, placement of concrete, and any other superimposed loads. Deflection of pipe in the installed pipeline under external loads shall not exceed limits in paragraph PLACING PIPE above as percent of the average inside diameter of

pipe. Use a mandrel to determine if allowable deflection has been exceeded.

3.9.1.4.1 Mandrel

Pass the mandrel through each run of pipe by pulling it by hand. If deflection readings in excess of the allowable deflection of average inside diameter of pipe are obtained, stop and begin test from the opposite direction. The mandrel must meet the Pipe Manufacture's recommendations and the following requirements. Provide a Mandrel that is rigid, nonadjustable, has a minimum of 9 fins, pulling rings at each end, and is engraved with the nominal pipe size and mandrel outside diameter. The mandrel must be 5 percent less than the certified-actual pipe diameter for Plastic Pipe, 5 percent less than the certified-actual pipe diameter for Corrugated Steel and Aluminum, 3 percent less than the certified-actual pipe diameter for Concrete-Lined Corrugated Steel and Ductile Iron Culvert. The Government will verify the outside diameter(OD)of the Contractor provided mandrel through the use of Contractor provided proving rings.

3.9.2 Inspection

3.9.2.1 Post-Installation Inspection

Visually inspect each segment of concrete pipe for alignment, settlement, joint separations, soil migration through the joint, cracks, buckling, bulging and deflection. An engineer must evaluate all defects to determine if any remediation or repair is required.

3.9.2.1.1 Concrete

Cracks with a width greater than 0.01 inches. An engineer must evaluate all pipes with cracks with a width greater than 0.01 inches but less than 0.10 inches to determine if any remediation or repair is required.

3.9.2.1.2 Flexible Pipe

Check each flexible pipe (PE, PVC, PP, Corregated Steel And Aluminum) for rips, tears, joint separations, soil migration through the joint, cracks, localized bucking, bulges, settlement and alignment.

3.9.2.1.3 Post-Installation Inspection Report

The deflection results and final post installation inspection report must include: pipe location identification, equipment used for inspection, inspector name, deviation from design, grade, deviation from line, deflection and deformation of flexible pipe, inspector notes, condition of joints, condition of pipe wall (e.g. distress, cracking, wall damage dents, bulges, creases, tears, holes, etc.).

3.9.2.2 Low Impact Development Inspection

Inspect Low Impact Development (LID) features indicated on the design portion of the LID Verification Report. Certify LID features were constructed according to plans and specifications or by submitting as-built drawings in accordance with UFGS 01 78 00 Closeout Submittals. When as-built drawings show deviations to the LID features, document the deviations on the LID Verification Report.

3.9.3 Repair Of Defects

3.9.3.1 Leakage Test

When leakage exceeds the maximum amount specified, correct source of excess leakage by replacing damaged pipe and gaskets and retest.

3.9.3.2 Deflection Testing

When deflection readings are in excess of the allowable deflection of average inside diameter of pipe are obtained, remove pipe which has excessive deflection and replace with new pipe. Retest 30 days after completing backfill, leakage testing and compaction testing.

3.9.3.3 Inspection

Replace pipe or repair defects indicated in the Post-Installation Inspection Report.

3.9.3.3.1 Concrete

Replace pipes having cracks with a width greater than 0.1 inches.

3.9.3.3.2 Flexible Pipe

Replace pipes having cracks or splits.

3.10 PROTECTION

Protect storm drainage piping and adjacent areas from superimposed and external loads during construction.

3.11 WARRANTY PERIOD

Pipe segments found to have defects during the warranty period must be replaced with new pipe and retested.

-- End of Section --

THIS PAGE HAS BEEN INTENTIONALLY LEFT BLANK

SECTION 33 82 00

TELECOMMUNICATIONS OUTSIDE PLANT (OSP)
06/17

PART 1 GENERAL

1.1 REFERENCES

The publications listed below form a part of this specification to the extent referenced. The publications are referred to in the text by the basic designation only.

ASTM INTERNATIONAL (ASTM)

ASTM B1	(2013) Standard Specification for Hard-Drawn Copper Wire
ASTM B8	(2011) Standard Specification for Concentric-Lay-Stranded Copper Conductors, Hard, Medium-Hard, or Soft
ASTM D1557	(2012; E 2015) Standard Test Methods for Laboratory Compaction Characteristics of Soil Using Modified Effort (56,000 ft-lbf/ft3) (2700 kN-m/m3)
ASTM D709	(2016) Standard Specification for Laminated Thermosetting Materials

INSTITUTE OF ELECTRICAL AND ELECTRONICS ENGINEERS (IEEE)

IEEE 100	(2000; Archived) The Authoritative Dictionary of IEEE Standards Terms
IEEE C2	(2017) National Electrical Safety Code

INSULATED CABLE ENGINEERS ASSOCIATION (ICEA)

ICEA S-87-640	(2016) Optical Fiber Outside Plant Communications Cable; 4th Edition
ICEA S-98-688	(2012) Broadband Twisted Pair Telecommunication Cable, Aircore, Polyolefin Insulated, Copper Conductors Technical Requirements
ICEA S-99-689	(2012) Broadband Twisted Pair Telecommunication Cable Filled, Polyolefin Insulated, Copper Conductors Technical Requirements

NATIONAL ELECTRICAL MANUFACTURERS ASSOCIATION (NEMA)

ANSI C62.61	(1993) American National Standard for Gas Tube Surge Arresters on Wire Line Telephone Circuits

NATIONAL FIRE PROTECTION ASSOCIATION (NFPA)

NFPA 70	(2017) National Electrical Code

TELECOMMUNICATIONS INDUSTRY ASSOCIATION (TIA)

TIA-455-107	(1999a) FOTP-107 Determination of Component Reflectance or Link/System Return Loss using a Loss Test Set
TIA-455-46A	(1990) FOTP-46 Spectral Attenuation Measurement for Long-Length, Graded-Index Optical Fibers
TIA-455-78-B	(2002) FOTP-78 Optical Fibres - Part 1-40: Measurement Methods and Test Procedures - Attenuation
TIA-472D000	(2007b) Fiber Optic Communications Cable for Outside Plant Use
TIA-492AAAA	(2009b) 62.5-um Core Diameter/125-um Cladding Diameter Class 1a Graded-Index Multimode Optical Fibers
TIA-492CAAA	(1998; R 2002) Detail Specification for Class IVa Dispersion-Unshifted Single-Mode Optical Fibers
TIA-492E000	(1996; R 2002) Sectional Specification for Class IVd Nonzero-Dispersion Single-Mode Optical Fibers for the 1550 nm Window
TIA-526-14	(2015c) OFSTP-14A Optical Power Loss Measurements of Installed Multimode Fiber Cable Plant
TIA-526-7	(2015a) OFSTP-7 Measurement of Optical Power Loss of Installed Single-Mode Fiber Cable Plant
TIA-568-C.1	(2009; Add 2 2011; Add 1 2012) Commercial Building Telecommunications Cabling Standard
TIA-568-C.2	(2009; Errata 2010; Add 2 2014; Add 1 2016) Balanced Twisted-Pair Telecommunications Cabling and Components Standards
TIA-568-C.3	(2008; Add 1 2011) Optical Fiber Cabling Components Standard
TIA-569	(2015d) Commercial Building Standard for Telecommunications Pathways and Spaces
TIA-590	(1997a) Standard for Physical Location and Protection of Below Ground Fiber Optic Cable Plant

TIA-606	(2012b; Add 1 2015) Administration Standard for the Telecommunications Infrastructure
TIA-607	(2011b) Generic Telecommunications Bonding and Grounding (Earthing) for Customer Premises
TIA-758	(2012b) Customer-Owned Outside Plant Telecommunications Infrastructure Standard
TIA/EIA-455	(1998b) Standard Test Procedure for Fiber Optic Fibers, Cables, Transducers, Sensors, Connecting and Terminating Devices, and Other Fiber Optic Components
TIA/EIA-455-204	(2000) Standard for Measurement of Bandwidth on Multimode Fiber
TIA/EIA-598	(2014d) Optical Fiber Cable Color Coding

U.S. DEPARTMENT OF AGRICULTURE (USDA)

RUS 1755	Telecommunications Standards and Specifications for Materials, Equipment and Construction
RUS Bull 1751F-630	(1996) Design of Aerial Plant
RUS Bull 1751F-640	(1995) Design of Buried Plant, Physical Considerations
RUS Bull 1751F-643	(2002) Underground Plant Design
RUS Bull 1751F-815	(1979) Electrical Protection of Outside Plant
RUS Bull 1753F-201	(1997) Acceptance Tests of Telecommunications Plant (PC-4)
RUS Bull 1753F-401	(1995) Splicing Copper and Fiber Optic Cables (PC-2)
RUS Bull 345-50	(1979) Trunk Carrier Systems (PE-60)
RUS Bull 345-65	(1985) Shield Bonding Connectors (PE-65)
RUS Bull 345-72	(1985) Filled Splice Closures (PE-74)
RUS Bull 345-83	(1979; Rev Oct 1982) Gas Tube Surge Arrestors (PE-80)

UNDERWRITERS LABORATORIES (UL)

UL 497	(2001; Reprint Jul 2013) Protectors for Paired Conductor Communication Circuits
UL 510	(2005; Reprint Jul 2013) Polyvinyl

	Chloride, Polyethylene and Rubber Insulating Tape
UL 83	(2014) Thermoplastic-Insulated Wires and Cables

1.2 RELATED REQUIREMENTS

Section 27 10 00 BUILDING TELECOMMUNICATIONS CABLING SYSTEM and Section 33 71 02 UNDERGROUND ELECTRICAL DISTRIBUTION apply to this section with additions and modifications specified herein.

1.3 DEFINITIONS

Unless otherwise specified or indicated, electrical and electronics terms used in this specification shall be as defined in TIA-568-C.1, TIA-568-C.2, TIA-568-C.3, TIA-569, TIA-606, and IEEE 100 and herein.

1.3.1 Campus Distributor (CD)

A distributor from which the campus backbone cabling emanates. (International expression for main cross-connect - (MC).) On Camp Lejeune the main cross-connect is established in Area Distribution Nodes (ADN), network operation centers (NOC), or telephone central office serving predesignated areas of the base. Designers should not design any new main cross-connects without approval from TSD (Telecommunications Support Division aka Base Telephone). The campus backbone is outside plant (OSP) back to TSD and a network operations center.

1.3.2 Entrance Facility (EF) (Telecommunications)

An entrance to the building for both private and public network service cables (including antennae, CATV, CCTV, IDS) including the entrance point at the building wall and continuing to the entrance room or space.

1.3.3 Entrance Room (ER) (Telecommunications)

A centralized space for telecommunications equipment that serves the occupants of a building. Equipment housed therein is considered distinct from a telecommunications room because of the nature of its complexity but could be combined within the communications room if additional space needed is allotted.

1.3.4 Building Distributor (BD)

A distributor in which the building backbone cables terminate and at which connections to the campus backbone cables may be made. (International expression for intermediate cross-connect - (IC).)

1.3.5 Pathway

A physical infrastructure utilized for the placement and routing of telecommunications cable.

1.4 SYSTEM DESCRIPTION

The telecommunications outside plant consists of cable, conduit, manholes, splices, protection, riser points, load coils, etc. required to provide signal paths from the closest point of presence (demarcation) to the new

facility, including free standing frames or backboards, interconnecting hardware, terminating cables, lightning and surge protection modules at one or both ends of the cable, installed from the entrance facility in building to designated demarcation point. The work consists of providing, testing and making operational cabling, interconnecting hardware and lightning and surge protection necessary to form a complete outside plant telecommunications system for continuous use. The telecommunications contractor must coordinate with TSD concerning layout and configuration of the EF telecommunications and OSP. The telecommunications contractor may be required to coordinate work effort for access to the EF telecommunications and OSP with TSD.

1.5 SUBMITTALS

Government approval is required for submittals with a "G" designation; submittals not having a "G" designation are for Contractor Quality Control approval. Submittals with an "S" are for inclusion in the Sustainability eNotebook, in conformance to Section 01 33 29 SUSTAINABILITY REPORTING. Submit the following in accordance with Section 01 33 00 SUBMITTAL PROCEDURES:

a. Submittals shall include the manufacturer's name, trade name, place of manufacture, and catalog model or number. Submittals shall also include applicable federal, military, industry, and technical society publication references. Should manufacturer's data require supplemental information for clarification, the supplemental information shall be submitted as specified in paragraph "Regulatory Requirements" and as required for certificates in Section 01 33 00 SUBMITTAL PROCEDURES.

b. Commercial off-the-shelf manuals shall be provided for operation, installation, configuration, and maintenance of products provided as a part of the communications outside plant (OSP). Submit operations and maintenance data in accordance with Section 01 78 23 OPERATION AND MAINTENANCE DATA and as specified herein not later than 2 months prior to the date of beneficial occupancy. In addition to requirements of Data package 5, include the requirements of paragraphs "Telecommunications Outside Plant Shop Drawings" and "Telecommunications Entrance Facility Drawings".

SD-02 Shop Drawings

Telecommunications Outside Plant; G

Telecommunications Entrance Facility Drawings; G

In addition to Section 01 33 00 SUBMITTAL PROCEDURES, provide shop drawings in accordance with paragraph SHOP DRAWINGS.

SD-03 Product Data

Wire and cable; G

Cable splices, and connectors; G

Closures; G

Building protector assemblies; G

Protector modules; G

Cross-connect terminal cabinets; G

Spare Parts; G

Submittals shall include the manufacturer's name, trade name, place of manufacture, and catalog model or number. Submittals shall also include applicable federal, military, industry, and technical society publication references. Should manufacturer's data require supplemental information for clarification, the supplemental information shall be submitted as specified in paragraph REGULATORY REQUIREMENTS and as required for certificates in Section 01 33 00 SUBMITTAL PROCEDURES.

SD-06 Test Reports

Pre-installation tests; G

Acceptance tests; G

Outside Plant Test Plan; G

SD-07 Certificates

Telecommunications Contractor Qualifications; G

Key Personnel Qualifications; G

Minimum Manufacturer's Qualifications; G

SD-08 Manufacturer's Instructions

Building protector assembly installation; G

Cable tensions; G

Fiber Optic Splices; G

Submit instructions prior to installation.

SD-09 Manufacturer's Field Reports

Factory Reel Test Data; G

SD-10 Operation and Maintenance Data

Telecommunications outside plant (OSP), Data Package 5; G

Commercial off-the-shelf manuals shall be provided for operation, installation, configuration, and maintenance of products provided as a part of the telecommunications outside plant (OSP). Submit operations and maintenance data in accordance with Section 01 78 23, OPERATION AND MAINTENANCE DATA and as specified herein not later than 2 months prior to the date of beneficial occupancy. In addition to requirements of Data package 5, include the requirements of paragraphs TELECOMMUNICATIONS OUTSIDE PLANT SHOP DRAWINGS and TELECOMMUNICATIONS ENTRANCE FACILITY DRAWINGS.

SD-11 Closeout Submittals

Record Documentation; G

In addition to other requirements, provide in accordance with paragraph RECORD DOCUMENTATION.

1.5.1 ADDITIONAL SUBMITTAL REQUIREMENTS

All submittals of material, equipment and design must be approved by the TSD Office prior to installing any telecommunications cabling and equipment.

1.6 QUALITY ASSURANCE

Ensure compliance with Section 01 45 00.00 20 QUALITY CONTROL.

1.6.1 Shop Drawings

Include wiring diagrams and installation details of equipment indicating proposed location, layout and arrangement, control panels, accessories, piping, ductwork, and other items that must be shown to ensure a coordinated installation. Wiring diagrams shall identify circuit terminals and indicate the internal wiring for each item of equipment and the interconnection between each item of equipment. Drawings shall indicate adequate clearance for operation, maintenance, and replacement of operating equipment devices. Submittals shall include the nameplate data, size, and capacity. Submittals shall also include applicable federal, military, industry, and technical society publication references.

1.6.1.1 Telecommunications Outside Plant Shop Drawings

Provide Outside Plant Design in accordance with TIA-758, RUS Bull 1751F-630 for aerial system design, and RUS Bull 1751F-643 for underground duct system design and for direct buried system design. Provide T0 shop drawings that show the physical and logical connections from the perspective of an entire campus, such as actual building locations, exterior pathways and campus backbone cabling on plan view drawings, major system nodes, and related connections on the logical system drawings in accordance with TIA-606. Drawings shall include wiring and schematic diagrams for fiber optic and copper cabling and splices, copper conductor gauge and pair count, load coils, fiber pair count and type, pathway duct and innerduct arrangement, associated construction materials, and any details required to demonstrate that cable system has been coordinated and will properly support the switching and transmission system identified in specification and drawings. Provide Registered Communications Distribution Designer (RCDD) approved drawings of the telecommunications outside plant. Update existing telecommunication Outside Plant T0 drawings to include information modified, deleted or added as a result of this installation in accordance with TIA-606. The telecommunications outside plant (OSP) shop drawings shall be included in the operation and maintenance manuals.

1.6.1.2 Telecommunications Entrance Facility Drawings

Provide T3 drawings for EF Telecommunications in accordance with TIA-606 that include telecommunications entrance facility plan views, pathway layout (cable tray, racks, ladder-racks, etc.), mechanical/electrical layout, and cabinet, rack, backboard and wall elevations. Drawings shall

show layout of applicable equipment including incoming cable connector blocks, building protector assembly, outgoing cable connector blocks, patch panels and equipment spaces and cabinet/racks. Drawings shall include a complete list of equipment and material, equipment rack details, proposed layout and anchorage of equipment and appurtenances, and equipment relationship to other parts of the work including clearance for maintenance and operation. Drawings may also be an enlargement of a congested area of T1 or T2 drawings. Provide T3 drawings for EF Telecommunications as specified in the paragraph TELECOMMUNICATIONS SPACE DRAWINGS of Section 27 10 00 BUILDING TELECOMMUNICATIONS CABLING SYSTEMS. The telecommunications entrance facility shop drawings shall be included in the operation and maintenance manuals.

1.6.2 Telecommunications Qualifications

Work under this section shall be performed by and the equipment shall be provided by the approved telecommunications contractor and key personnel. Qualifications shall be provided for: the telecommunications system contractor, the telecommunications system installer, the supervisor (if different from the installer), and the cable splicing and terminating personnel. A minimum of 30 days prior to installation, submit documentation of the experience of the telecommunications contractor and of the key personnel.

1.6.2.1 Telecommunications Contractor Qualifications

The telecommunications contractor shall be a firm which is regularly and professionally engaged in the business of the applications, installation, and testing of the specified telecommunications systems and equipment. The telecommunications contractor shall demonstrate experience in providing successful telecommunications systems that include outside plant and broadband cabling within the past 3 years. Submit documentation for a minimum of three and a maximum of five successful telecommunication system installations for the telecommunications contractor. Each of the key personnel shall demonstrate experience in providing successful telecommunications systems in accordance with TIA-758 within the past 3 years.

1.6.2.2 Key Personnel Qualifications

Provide key personnel who are regularly and professionally engaged in the business of the application, installation and testing of the specified telecommunications systems and equipment. There may be one key person or more key persons proposed for this solicitation depending upon how many of the key roles each has successfully provided. Each of the key personnel shall demonstrate experience in providing successful telecommunications systems within the past 3 years.

Cable splicing and terminating personnel assigned to the installation of this system or any of its components shall have training in the proper techniques, shall be Building Industry Consulting Services International (BICSI) Certified Cabling Installation Technicians, Installer Level 2, or have a minimum of 3 years current consecutive experience in the installation of the specified copper and fiber optic cable and components for products used.

Supervisors and installers assigned to the installation of this system or any of its components shall have factory or factory approved certification from each equipment manufacturer indicating that they are qualified to

install and test the provided products.

Submit documentation for a minimum of three and a maximum of five successful telecommunication system installations for each of the key personnel. Documentation for each key person shall include at least two successful system installations provided that are equivalent in system size and in construction complexity to the telecommunications system proposed for this solicitation. Include specific experience in installing and testing telecommunications outside plant systems, including broadband cabling, and provide the names and locations of at least two project installations successfully completed using optical fiber and copper telecommunications cabling systems. All of the existing telecommunications system installations offered by the key persons as successful experience shall have been in successful full-time service for at least 18 months prior to the issuance date for this solicitation. Provide the name and role of the key person, the title, location, and completed installation date of the referenced project, the referenced project owner point of contact information including name, organization, title, and telephone number, and generally, the referenced project description including system size and construction complexity.

Indicate that all key persons are currently employed by the telecommunications contractor, or have a commitment to the telecommunications contractor to work on this project. All key persons shall be employed by the telecommunications contractor at the date of issuance of this solicitation, or if not, have a commitment to the telecommunications contractor to work on this project by the date that the bid was due to the Contracting Officer.

Note that only the key personnel approved by the Contracting Officer in the successful proposal shall do work on this solicitation's telecommunications system. Key personnel shall function in the same roles in this contract, as they functioned in the offered successful experience. Any substitutions for the telecommunications contractor's key personnel requires approval from the Contracting Officer.

1.6.2.3 Minimum Manufacturer's Qualifications

Cabling, equipment and hardware manufacturers shall have a minimum of 3 years experience in the manufacturing, assembly, and factory testing of components which comply with, TIA-568-C.1, TIA-568-C.2 and TIA-568-C.3. In addition, cabling manufacturers shall have a minimum of 3 years experience in the manufacturing and factory testing of cabling which comply with ICEA S-87-640, ICEA S-98-688, and ICEA S-99-689.

1.6.3 Outside Plant Test Plan

Prepare and provide a complete and detailed test plan for field tests of the outside plant including a complete list of test equipment for the copper conductor and optical fiber cables, components, and accessories for approval by Telecommunications Support Division (aka Base Telephone) via the Contracting Officer. Include a cut-over plan with procedures and schedules for relocation of facility station numbers without interrupting service to any active location. Submit the plan at least 30 days prior to tests for Contracting Officer approval. Provide outside plant testing and performance measurement criteria in accordance with TIA-568-C.1 and RUS Bull 1753F-201. Include procedures for certification, validation, and testing that includes fiber optic link performance criteria.

1.6.4 Standard Products

Provide materials and equipment that are standard products of manufacturers regularly engaged in the production of such products which are of equal material, design and workmanship and shall be the manufacturer's latest standard design that has been in satisfactory commercial or industrial use for at least 2 years prior to bid opening. The 2-year period shall include applications of equipment and materials under similar circumstances and of similar size. The product shall have been on sale on the commercial market through advertisements, manufacturers' catalogs, or brochures during the 2-year period. Products supplied shall be specifically designed and manufactured for use with outside plant telecommunications systems. Where two or more items of the same class of equipment are required, these items shall be products of a single manufacturer; however, the component parts of the item need not be the products of the same manufacturer unless stated in this section. Product submission must be approved for use by TSD via Contracting Officer prior to install.

1.6.4.1 Alternative Qualifications

Products having less than a 2-year field service record will be acceptable if a certified record of satisfactory field operation for not less than 6000 hours, exclusive of the manufacturers' factory or laboratory tests, is provided.

1.6.4.2 Material and Equipment Manufacturing Date

Products manufactured more than 3 years prior to date of delivery to site shall not be used, unless specified otherwise.

1.6.5 Regulatory Requirements

In each of the publications referred to herein, consider the advisory provisions to be mandatory, as though the word, "shall" had been substituted for "should" wherever it appears. Interpret references in these publications to the "authority having jurisdiction," or words of similar meaning, to mean the TSD via the Contracting Officer. Equipment, materials, installation, and workmanship shall be in accordance with the mandatory and advisory provisions of NFPA 70 unless more stringent requirements are specified or indicated by references or AHJ. Because references are living documents use of most current version shall be enforced.

1.6.5.1 Independent Testing Organization Certificate

In lieu of the label or listing, submit a certificate from an independent testing organization, competent to perform testing, and approved by the Contracting Officer. The certificate shall state that the item has been tested in accordance with the specified organization's test methods and that the item complies with the specified organization's reference standard.

1.7 DELIVERY, STORAGE, AND HANDLING

Ship cable on reels in 5000 feet length with a minimum overage of 10 percent for 25, 50 or 100 pair configuration and 1250 feet length for larger cables. Radius of the reel drum shall not be smaller than the minimum bend radius of the cable. Wind cable on the reel so that

unwinding can be done without kinking the cable. Two meters of cable at both ends of the cable shall be accessible for testing. Attach permanent label on each reel showing length, cable identification number, cable size, cable type, and date of manufacture. Provide water resistant label and the indelible writing on the labels. Apply end seals to each end of the cables to prevent moisture from entering the cable. Reels with cable shall be suitable for outside storage conditions when temperature ranges from minus 40 degrees C to plus 65 degrees C, with relative humidity from 0 to 100 percent. Equipment, other than cable, delivered and placed in storage shall be stored with protection from weather, humidity and temperature variation, dirt and dust, or other contaminants in accordance with manufacturer's requirements.

1.8 MAINTENANCE

1.8.1 Record Documentation

Provide the activity responsible for telecommunications system maintenance and administration (TSD via the Contracting Officer) a single complete and accurate set of record documentation for the entire telecommunications system for each structure with respect to this project.

Provide record documentation as specified in Section 27 10 00 BUILDING TELECOMMUNICATIONS CABLING SYSTEM.

Provide T5 drawings including documentation on cables and termination hardware in accordance with TIA-606. T5 drawings shall include schedules to show information for cut-overs and cable plant management, patch panel layouts, cross-connect information and connecting terminal layout as a minimum. T5 drawings shall be provided in both hard copy format and on electronic media using Windows based computer cable management software. A licensed copy of the cable management software including documentation, shall be provided. Update existing record documentation to reflect campus distribution T0 drawings and T3 drawing schedule information modified, deleted or added as a result of this installation. Provide the following T5 drawing documentation as a minimum:

a. Cables - A record of installed cable shall be provided in accordance with TIA-606. The cable records shall include the required data fields for each cable and complete end-to-end circuit report for each complete circuit from the assigned outlet to the entry facility for the soft copy in accordance with TIA-606. Include manufacture date of cable with submittal.

b. Termination Hardware - Provide a record of installed patch panels, cross-connect points, campus distributor and terminating block arrangements and type in accordance with TIA-606. Documentation shall include the required data fields as a minimum in accordance with TIA-606.

Provide record documentation as specified in Section 27 10 00 BUILDING TELECOMMUNICATIONS CABLING SYSTEM.

1.8.2 Spare Parts

In addition to the requirements of Section 01 78 23 OPERATION AND MAINTENANCE DATA, provide a complete list of parts and supplies, with current unit prices and source of supply, and a list of spare parts recommended for stocking. Spare parts shall be provided no later than the

start of field testing.

1.9 WARRANTY

The equipment items shall be supported by service organizations which are reasonably convenient to the equipment installation in order to render satisfactory service to the equipment on a regular and emergency basis during the warranty period of the contract.

PART 2 PRODUCTS

2.1 MATERIALS AND EQUIPMENT

Products supplied shall be specifically designed and manufactured for use with outside plant telecommunications systems. All product data must be supplied in the submittal process and no product can be used without approval from TSD via the Contracting Officer.

2.2 TELECOMMUNICATIONS ENTRANCE FACILITY

2.2.1 Building Protector Assemblies

Building protector assembly (BEP) shall be self-contained and have interconnecting hardware (710 input and 66 output) for connection to all Outside Plant rated cabling at full capacity. Provide and follow manufacturers instructions for building protector assembly installation. If Multiple BEPs are used, arrange and connect with lowest count high and to left and highest to bottom right. Provide copper cable interconnecting hardware as specified in Section 27 10 00 BUILDING TELECOMMUNICATIONS CABLING SYSTEM. There will be no service loops or splicing of copper cable outside of the building protector assembly within the telecommunications room (pigtail BEPs are not authorized).

2.2.2 Protector Modules

Provide in accordance with UL 497 three-electrode gas tube type, 5 pin, rated for the application. Provide gas tube protection modules in accordance with RUS Bull 345-83 and shall be heavy duty, A>10kA, B>400, C>65A where A is the maximum single impulse discharge current, B is the impulse life and C is the AC discharge current in accordance with ANSI C62.61. The gas modules shall shunt high voltage to ground, fail short, and be equipped with an external spark gap and heat coils in accordance with UL 497. Provide the number of surge protection modules equal to the number of pairs of exterior cable of the building protector assembly. Recommend 4B1E type.

2.2.3 Fiber Optic Terminations

Provide fiber optic cable terminations as specified in 27 10 00 BUILDING TELECOMMUNICATIONS CABLING SYSTEM. Ensure terminations within the Fiber Distribution Center (FDC) are logical left to right and top to bottom (OSP SM/Backbone SM then MM/Row to Row SM then MM).

2.2.4 Pathways

Underground applications for single buildings: provide a minimum of (3) four inch ducts (copper, fiber, maintenance duct... in that order), one of which (fiber)contains (2)- three cell fabric inner duct. The (3) four inch ducts shall enter the Main Communications Room (entrance facility) to

the far left of the communications backboard (longest farthest wall from the door) and shall be 3-6 inches above floor and 3-6 inches away from wall, aligned parallel to the communications backboard wall. The underground ducts must have 3" concrete encasing, with 24 inches minimum backfill below grade from the Communications Entrance Facility to the maintenance hole that will be providing service to the building (Demarcation point).

For campus distribution between maintenance holes, ducts may need to be 5" to support larger cables, also there will be no less than 4", and up to 4 ducts as needed for distribution to the area serviced. All new ducts will include bell ends and terminators flush with MH walls sealed water tight. Both ends of new duct shall be plugged with compression plugs or duct seal around cables (no expanding foam). All new pathway shall be visibly marked and provided on area map with GPS coordinates. All ducts shall be installed as straight through runs between holes and shall not cross each other allowing a straight pull through. All duct banks where fiber cables are installed shall include fabric innerduct to maximize the pathway.

For direct buried applications (only in remote areas where there is no manhole duct systems and none is in project contract), provide a minimum of three (3) four inch ducts from the Communications Entrance Facility to outside the bldg foot print past any obstructions, footers, or sidewalks by at least 5 feet into clear soil/entryway, 24 inches below grade. The ducts will be plugged at both ends and clearly marked on outside end. For distribution to demarcation, between handholes, and riser points cables need to be 36" below grade with metal locating tape at 24" below grade. Cables need to be in HDDPE direct bored, HDDPE direct buried, concrete encased in conduit, or concrete encased split duct under all roadways and pavement. All new cables need to be provided on area map with GPS coordinates for riser points or hand holes. Handholes and maintenance holes shall be traffic rated (MIN tier 22). Handhole size min 4'x4'x4'. Maintenance hole size 6'x7'x8'and all penetrations should be splayed.

If utility pathway conflicts necessitate placement of a manhole below the typical/normal depth (6-12 inches), the roof of the manhole shall be placed at normal depth and riser extensions shall be used to increase the depth of the manhole. If a deep collar is unavoidable and the depth of the collar will exceed 24 inches, the Designer shall obtain written permission from TSD (Base Telephone) and ensure that the collar is equipped with permanent galvanized steps (rungs). Also do not drill hole in bottom of maintenance/handhole for grounding rod, use grounding ribbon built into the concrete structure itself that is in full contact with the ground.

2.3 CLOSURES

2.3.1 Copper Conductor Closures

2.3.1.1 Aerial Cable Closures

Provide cable closure assembly consisting of a frame with clamps, a lift-off polyethylene cover, cable nozzles, and drop wire rings. Closure shall be suitable for use on Figure 8 cables. Closures shall be free breathing and suitable for housing either straight-through type or branch type splices of non-pressurized communications cables and shall be sized as indicated. The closure shall be constructed with ultraviolet resistant PVC.

NOTE: The installation of aerial cabling aboard Marine Corps Base, Camp Lejeune and Marine Corps Air Station, New River is not authorized.

2.3.1.2 Underground Cable Closures

a. Aboveground: Provide aboveground closures constructed of not less than 14 gauge steel and acceptable for pole or stake mounting in accordance with RUS 1755.910. Closures shall be sized and contain a marker as indicated. Covers shall be secured to prevent unauthorized entry. PVC type closures are to be used in beach areas. All pedestals shall contain a minimum 4 foot x 3/8 inch pigtailed ground rod.

b. Direct burial: Provide buried closure suitable for enclosing a straight, butt, and branch splice in a container into which can be poured an encapsulating compound. Closure shall have adequate strength to protect the splice and maintain cable shield electrical continuity in the buried environment. Encapsulating compound shall be reenterable and shall not alter the chemical stability of the closure. Provide filled splice cases in accordance with RUS Bull 345-72.

NOTE: The installation of a direct buried closure aboard Marine Corps Base, Camp Lejeune and Marine Corps Air Station, New River is not authorized; all closures shall be in a riser point, handhole, or manhole.

c. In vault or manhole: Provide underground closure suitable to house a straight, butt, and branch splice in a protective housing into which air can be pumped for flash testing. Closure shall be of suitable thermoplastic or stainless steel material supplying structural strength necessary to pass the mechanical and electrical requirements in a vault or manhole environment. Heat shrinkable type closures shall not be used. Provide filled splice cases in accordance with RUS Bull 345-72.

2.3.2 Fiber Optic Closures

2.3.2.1 Aerial

Provide aerial closure that is free breathing and suitable for housing splice organizer of non-pressurized cables. Closure shall be constructed from heavy PVC with ultraviolet resistance.

NOTE: The installation of new aerial cabling aboard Marine Corps Base, Camp Lejeune and Marine Corps Air Station, New River is not authorized.

2.3.2.2 Direct Burial

Provide buried closure suitable to house splice organizer in protective housing into which can be poured an encapsulating compound. Closure shall have adequate strength to protect the splice and maintain cable shield electrical continuity, when metallic, in buried environment. Encapsulating compound shall be reenterable and shall not alter chemical stability of the closure.

NOTE: The installation of a direct buried closure aboard Marine Corps Base, Camp Lejeune and Marine Corps Air Station, New River is not authorized; all closures shall be in a riser point, handhold, or manhole.

2.3.2.3 In Vault or Manhole

Provide underground closure suitable to house splice organizer in a protective housing into which air can be pumped for flash testing. Closure shall be of thermoplastic material supplying structural strength necessary to pass the mechanical and electrical requirements in a vault or manhole environment. Provide 60' slack coils on fiber in every 3rd manhole/handhole or in any which a turn is made.

2.4 PAD MOUNTED CROSS-CONNECT TERMINAL CABINETS

Provide in accordance with RUS 1755.910 and the following:

a. Constructed of 14 gauge steel.

b. Equipped with a double set of hinged doors with closed-cell foam weatherstripping. Doors shall be locked and contain a marker as indicated.

c. Equipped with spool spindle bracket, mounting frames, binding post log, jumpering instruction label, and load coil mounting provisions.

d. Complete with cross connect modules to terminate number of pairs as indicated.

e. Sized as indicated.

2.5 CABLE SPLICES, AND CONNECTORS

2.5.1 Copper Cable Splices

In vaults or manholes or entrance protectors provide multi-pair, in-line fold back to maximize length of accessible conductors for maintenance or single pair, in-line splices of a moisture resistant, three-wire insulation displacement connector held rigidly in place to assure maximum continuity in accordance with RUS Bull 1753F-401. Cables greater than 25 pairs shall be spliced using multipair splicing connectors, which accommodate 25 pairs of conductors at a time (typical 710). Provide correct connector size to accommodate the cable gauge of the supplied cable. Provide enough cable slack suitable for splicing operations to maximize length of accessible conductors for maintenance operations. In above ground splices use three wire insulation displacement single pair connectors no matter what size the cable. In longer runs of copper provide proper load coils to balance the load as needed to ensure line quality in accordance with RUS Bull 1753F-201.

2.5.2 Copper Cable Splice Connector

Provide splice connectors with a polycarbonate body and cap and a tin-plated brass contact element. Connector shall accommodate 19 to 26 AWG solid wire with a maximum insulation diameter of 0.065 inch and shall only be installed with manufacturer recommended crimp/cut tool. Fill connector with sealant grease to make a moisture resistant connection, in accordance with RUS Bull 1753F-401.

2.5.3 Fiber Optic Cable Splices

Provide fiber optic cable splices and splicing materials for fusion methods at locations shown on the construction drawings. The splice

insertion loss shall be 0.3 dB maximum when measured in accordance with TIA-455-78-B using an Optical Time Domain Reflectometer (OTDR). Splices shall be designed for a return loss of 40.0 db max for single mode fiber when tested in accordance with TIA-455-107. Physically protect each fiber optic splice by a splice kit specially designed for the splice. Provide enough cable slack suitable for splicing operations, but in no case less than 30 feet at each end.

2.5.4 Fiber Optic Splice Organizer

Provide splice organizer suitable for housing fiber optic splices in a neat and orderly logical fashion. Splice organizer shall allow for a minimum of 3 feet of fiber for each fiber within the cable to be neatly stored without kinks or twists. Splice organizer shall accommodate individual strain relief for each splice and allow for future maintenance or modification, without damage to the cable or splices. Provide splice organizer hardware, such as splice trays, protective glass shelves, and shield bond connectors in a splice organizer kit.

2.5.5 Shield Connectors

Provide connectors with a stable, low-impedance electrical connection between the cable shield and the bonding conductor in accordance with RUS Bull 345-65.

2.6 CONDUIT

Provide conduit as specified in Section 33 71 02 UNDERGROUND ELECTRICAL DISTRIBUTION.

2.7 PLASTIC INSULATING TAPE

Tape shall be premium quality, heavy-duty, weather-resistant designed for use on electrical and telecommunications applications and UL 510 compliant.

2.8 WIRE AND CABLE

2.8.1 Copper Conductor Cable

Solid copper conductors, covered with an extruded solid insulating compound. Insulated conductors shall be twisted into pairs which are then stranded or oscillated to form a cylindrical core. For special high frequency applications, the cable core shall be separated into compartments. Cable shall be completed by the application of a suitable core wrapping material, a corrugated copper or plastic coated aluminum shield, and an overall extruded jacket. Telecommunications contractor shall verify distances between splice points, slack required, and pair count required prior to ordering cable. Gauge of conductor shall be determined by the distance from the central office. In all cases the installed cable shall be of the same gauge as the cable it is being spliced into at the Demarcation point. The cable range available is; numbers of pairs specified; 19 gauge (6 to 400 pairs), 22 gauge (6 to 1200 pairs), 24 gauge (6 to 2100 pairs), and 26 gauge (6 to 3000 pairs). **26 AWG is not used on Camp Lejeune** Copper conductors shall conform to the following: All outside plant copper conductor cable available in PE-39 type shall be used; PE-89 is only approved for large pair counts when PE-39 is not manufactured due to large count.

2.8.1.1 Underground

Provide filled cable (type PE-39/89) meeting the requirements of ICEA S-99-689, RUS 1755.390, and RUS 1755.890. Provide enough cable slack suitable for splicing operations, but in no case less than 10 feet.

2.8.1.2 Aerial

Provide filled cable meeting the requirements of ICEA S-99-689, ICEA S-98-688, and RUS 1755.390 except that it shall be suitable for aerial installation and shall be Figure 8 distribution wire with 6,000 pound Class A galvanized steel or 6,000 pound aluminum-clad steel strand.

2.8.1.3 Screen

Provide screen-compartmental core cable filled cable meeting the requirements of ICEA S-99-689 and RUS 1755.390.

2.8.2 Fiber Optic Cable

Provide single-mode, 8/125-um, 0.10 aperture 1310 nm fiber optic cable in accordance with TIA-492CAAA, and single-mode, 8/125-um, 0.10 aperture 1550 nm fiber optic cable in accordance with TIA-492E000 and multimode 62.5/125-um, 0.275 aperture fiber optic cable in accordance with TIA-492AAAA, TIA-472D000, and ICEA S-87-640 including any special requirements made necessary by a specialized design. Provide a minimum of 24 optical fibers or more as indicated by drawings but never less without a waiver from local authority having jurisdiction. Fiber optic cable shall be specifically designed for outside use with preferred double jacket (if buried), single armor, loose buffer construction, and must be shielded. Provide fiber optic color code in accordance with TIA/EIA-598. Provide minimum 60' slack coil in every 3rd MH or any one where a turn is made.

NOTE: The installation of Multi-mode OSP Fiber Optic cables aboard Marine Corps Base, Camp Lejeune and Marine Corps Air Station, New River is not authorized; except as Backbone Underground Cabling between Communications Rooms within the same building, which is allowed, but not recommended.

2.8.2.1 Strength Members

Provide central/non-central, non-metallic/metallic strength members with sufficient tensile strength for installation and residual rated loads to meet the applicable performance requirements in accordance with ICEA S-87-640. The strength member is included to serve as a cable core foundation to reduce strain on the fibers, and shall not serve as a pulling strength member.

2.8.2.2 Shielding or Other Metallic Covering

Provide continuous, conductive or locatable, single tape covering and shield in accordance with ICEA S-87-640 on all cables.

2.8.2.3 Performance Requirements

Provide fiber optic cable with optical and mechanical performance requirements in accordance with ICEA S-87-640.

2.8.3 Grounding and Bonding Conductors

Provide grounding and bonding conductors in accordance with RUS 1755.200, TIA-607, IEEE C2, and NFPA 70. Solid bare copper wire meeting the requirements of ASTM B1 for sizes No. 8 AWG and smaller and stranded bare copper wire meeting the requirements of ASTM B8, for sizes No. 6 AWG and larger. Conductors should be installed so as not to exceed minimum bend radius and shall be attached to most suitable bond available at location. Do not install field modified ground rods in maintenance holes that already have factory grounding. Insulated conductors shall have 600-volt, Type TW insulation meeting the requirements of UL 83.

2.9 T-SPAN LINE TREATMENT REPEATERS

Provide as indicated. Repeaters shall be pedestal mounted with pressurized housings, sized as indicated and shall meet the requirements of RUS Bull 345-50.

2.10 POLES AND HARDWARE

Provide poles and hardware as specified in Section 33 71 01 OVERHEAD TRANSMISSION AND DISTRIBUTION.

2.11 CABLE TAGS IN MANHOLES, HANDHOLES, AND VAULTS

Provide tags for each telecommunications cable or wire located in manholes, handholes, and vaults. Cable tags shall be stainless steel or polyethylene and labeled in accordance with TIA-606. Coordinate actual cable tag information with TSD. Handwritten labeling is unacceptable.

2.11.1 Stainless Steel

Provide stainless steel, cable tags 1 5/8 inches in diameter 1/16 inch thick minimum, and circular in shape. Tags shall be die stamped with numbers, letters, and symbols not less than 0.25 inch high and approximately 0.015 inch deep in normal block style.

2.11.2 Polyethylene Cable Tags

Provide tags of polyethylene that have an average tensile strength of 3250 pounds per square inch; and that are 0.08 inch thick (minimum), non-corrosive non-conductive; resistive to acids, alkalis, organic solvents, and salt water; and distortion resistant to 170 degrees F. Provide 0.05 inch (minimum) thick black polyethylene tag holder. Provide a one-piece nylon, self-locking tie at each end of the cable tag. Ties shall have a minimum loop tensile strength of 175 pounds. The cable tags shall have black block letters, numbers, and symbols one inch high on a yellow background. Letters, numbers, and symbols shall not fall off or change positions regardless of the cable tags orientation.

2.12 BURIED WARNING AND IDENTIFICATION TAPE

Provide fiber optic media marking and protection in accordance with TIA-590. Provide color, type and depth of tape as specified in paragraph BURIED WARNING AND IDENTIFICATION TAPE in Section 31 23 00.00 20 EXCAVATION AND FILL.

2.13 GROUNDING BRAID

Provide grounding braid that provides low electrical impedance connections for dependable shield bonding in accordance with RUS 1755.200. Braid

shall be made from flat tin-plated copper properly attached to factory ground in maintenance/handhole, TMGB, building steel, electrical bus, or approved grounding rods in riser points.

2.14 MANUFACTURER'S NAMEPLATE

Each item of equipment shall have a nameplate bearing the manufacturer's name, address, model number, and serial number securely affixed in a conspicuous place; the nameplate of the distributing agent will not be acceptable.

2.15 FIELD FABRICATED NAMEPLATES

Provide laminated plastic nameplates in accordance with ASTM D709 for each patch panel, protector assembly, rack, cabinet and other equipment or as indicated on the drawings. Each nameplate inscription shall identify the function and, when applicable, the position. Nameplates shall be melamine plastic, 0.125 inch thick, white with black center core. Surface shall be matte finish. Corners shall be square. Accurately align lettering and engrave into the core. Minimum size of nameplates shall be one by 2.5 inches. Lettering shall be a minimum of 0.25 inch high normal block style.

2.16 TESTS, INSPECTIONS, AND VERIFICATIONS

2.16.1 Factory Reel Test Data

Test 100 percent OTDR test of FO media at the factory in accordance with TIA-568-C.1 and TIA-568-C.3. Use TIA-526-7 for single mode fiber and TIA-526-14 Method B for multi mode fiber measurements. Calibrate OTDR to show anomalies of 0.2 dB minimum. Enhanced performance filled OSP copper cables, referred to as Broadband Outside Plant (BBOSP), shall meet the requirements of ICEA S-99-689. Enhanced performance air core OSP copper cables shall meet the requirements of ICEA S-98-688. Submit test reports, including manufacture date for each cable reel and receive approval before delivery of cable to the project site.

PART 3 EXECUTION

3.1 INSTALLATION

Install all system components and appurtenances in accordance with manufacturer's instructions, IEEE C2, NFPA 70, and as indicated. Provide all necessary interconnections, services, and adjustments required for a complete and operable telecommunications system from designated demarcation point to building entrance facility, to include lightning protection terminations at one or both ends of the cable as required per paragraph: SYSTEM DESCRIPTION.

3.1.1 Contractor Damage

Promptly repair indicated utility lines or systems damaged during site preparation and construction. Damages to lines or systems not indicated, which are caused by Contractor operations, shall be treated as "Changes" under the terms of the Contract Clauses. When Contractor is advised in writing of the location of a nonindicated line or system, such notice shall provide that portion of the line or system with "indicated" status in determining liability for damages. In every event, immediately notify Base Telephone via the Contracting Officer of damage.

3.1.2 Cable Inspection and Repair

Handle cable and wire provided in the construction of this project with care. Inspect cable reels for cuts, nicks or other damage. Damaged cable shall be replaced or repaired to the satisfaction of the Contracting Officer. Reel wraps shall remain intact on the reel until the cable is ready for placement.

3.1.3 Direct Burial System

Installation shall be in accordance with RUS Bull 1751F-640. Under railroad tracks, paved areas, and roadways install cable in conduit encased in concrete. Slope ducts to drain. Excavate trenches by hand or mechanical trenching equipment after proper locates and pothole methods are used. Provide a minimum cable cover of 36 inches below finished grade for both fiber and copper cable. Trenches shall be not less than 6 inches wide and in straight lines between cable markers. Do not use cable plows. Bends in trenches shall have a radius of not less than 36 inches. Where two or more cables are laid parallel in the same trench, space laterally at least 3 inches apart. When rock is encountered, remove it to a depth of at least 3 inches below the cable and fill the space with sand or clean earth free from particles larger than 1/4 inch. Do not unreel and pull cables into the trench from one end. Cable may be unreeled on grade and lifted into position. Provide color, type and depth of warning tape as specified in paragraph BURIED WARNING AND IDENTIFICATION TAPE in Section 31 23 00.00 20 EXCAVATION AND FILL. Fiber optic cable will not be direct buried, it will be installed in a smooth wall HDPE type duct.

3.1.3.1 Cable Placement

a. Prior to design and installation of any copper or optical fiber cable systems, cable routes and pathways must be approved by the Base Telephone via Contracting Officer. Manhole layouts (butterflies) shall be provided for review and approval. Cable route shall include which conduits are to be used for which cables using a logical bottom up and straight run approach.

b. Separate cables crossing other cables or metal piping from the other cables or pipe by not less than 3 inches of well tamped earth. Do not install circuits for communications under or above traffic signal loops.

c. Cables shall be in one piece without splices between connections except where the distance exceeds the lengths in which the cable is furnished.

d. Avoid bends in cables of small radii and twists that might cause damage. Do not bend cable and wire in a radius less than 10 times the outside diameter of the cable or wire.

e. Leave a horizontal slack of approximately 10 feet in the ground on each end of cable runs, on each side of connection boxes, and at points where connections are brought aboveground. Where cable is brought aboveground, leave additional slack to make necessary connections. (For fiber, provide a minimum of 30 feet at each end.)

3.1.3.2 Identification Slabs (Markers)

Provide a marker at each change of direction of the cable, over the ends

of ducts or conduits which are installed under paved areas and roadways and over each splice. Identification markers shall be of concrete, approximately 20 inches square by 6 inches thick.

3.1.3.3 Backfill for Rocky Soil

When placing cable in a trench in rocky soil, the cable shall be cushioned by a fill of sand or selected soil at least 2 inches thick on the floor of the trench before placing the cable or wire. The backfill for at least 4 inches above the wire or cable shall be free from stones, rocks, or other hard or sharp materials which might damage the cable or wire. If the buried cable is placed less than 24 inches in depth, a protective cover of concrete shall be used.

3.1.4 Cable Protection

Provide direct burial cable protection in accordance with NFPA 70 and as specified in Section 33 71 02 UNDERGROUND ELECTRICAL DISTRIBUTION. Galvanized conduits which penetrate concrete (slabs, pavement, and walls) shall be PVC coated and shall extend from the first coupling or fitting outside either side of the concrete minimum of 6 inches per 12 inches burial depth beyond the edge of the surface where cable protection is required; all conduits shall be sealed on each end. Where additional protection is required, cable may be placed in galvanized iron pipe (GIP) sized on a maximum fill of 40 percent of cross-sectional area, or in concrete encased 4 inches PVC pipe. Conduit may be installed by jacking or trenching. Trenches shall be backfilled with earth and mechanically tamped at 6 inches lift so that the earth is restored to the same density, grade and vegetation as adjacent undisturbed material.

3.1.4.1 Cable End Caps

Cable ends shall be sealed at all times with coated heat shrinkable end caps. Cables ends shall be sealed when the cable is delivered to the job site, while the cable is stored and during installation of the cable. The caps shall remain in place until the cable is spliced or terminated. Sealing compounds and tape are not acceptable substitutes for heat shrinkable end caps. Cable which is not sealed in the specified manner at all times will be rejected.

3.1.5 Underground Duct

Provide underground duct and connections (terminators and bell ends) to existing manholes or handholes, as specified in Section 33 71 02 UNDERGROUND ELECTRICAL DISTRIBUTION with any additional requirements as specified herein. Minimum size of ducts shall be 4 inch and minimum number will be three (3) into any building.

3.1.6 Reconditioning of Surfaces

Provide reconditioning of surfaces as specified in Section 33 71 02 UNDERGROUND ELECTRICAL DISTRIBUTION.

3.1.7 Penetrations

Caulk and seal cable access penetrations in walls, ceilings and other parts of the building. Seal openings around electrical penetrations through fire resistance-rated wall, partitions, floors, or ceilings in accordance with Section 07 84 00 FIRESTOPPING.

3.1.8 Cable Pulling

Test duct lines with a mandrel (SHALL BE WITNESSED BY GOVERNMENT) and swab out to remove foreign material before the pulling of cables. Avoid damage to cables in setting up pulling apparatus or in placing tools or hardware. Do not step on cables when entering or leaving the manhole. Do not place cables in ducts other than those shown without prior written approval of Base Telephone via the Contracting Officer. Roll cable reels in the direction indicated by the arrows painted on the reel flanges. Set up cable reels on the same side of the manhole as the conduit section in which the cable is to be placed. Level the reel and bring into proper alignment with the conduit section so that the cable pays off from the top of the reel in a long smooth bend into the duct without twisting. Under no circumstances shall the cable be paid off from the bottom of a reel. Check the equipment set up prior to beginning the cable pulling to avoid an interruption once pulling has started. Use a cable feeder guide of suitable dimensions between cable reel and face of duct to protect cable and guide cable into the duct as it is paid off the reel. As cable is paid off the reel, lubricate and inspect cable for sheath defects. When defects are noticed, stop pulling operations and notify the Contracting Officer to determine required corrective action. Cable pulling shall also be stopped when reel binds or does not pay off freely. Rectify cause of binding before resuming pulling operations. Provide cable lubricants recommended by the cable manufacturer. Avoid bends in cables of small radii and twists that might cause damage. Do not bend cable and wire in a radius less than 10 times the outside diameter of the cable or wire.

3.1.8.1 Cable Tensions

Obtain from the cable manufacturer and provide to the Contracting Officer, the maximum allowable pulling tension. This tension shall not be exceeded.

3.1.8.2 Pulling Eyes

Equip cables 1.25 inches in diameter and larger with cable manufacturer's factory installed pulling-in eyes. Provide cables with diameter smaller than 1.25 inches with heat shrinkable type end caps or seals on cable ends when using cable pulling grips. Rings to prevent grip from slipping shall not be beaten into the cable sheath. Use a swivel of 3/4 inch links between pulling-in eyes or grips and pulling strand.

3.1.8.3 Installation of Cables in Manholes, Handholes, and Vaults

Do not install cables utilizing the shortest route, but route along those walls providing the longest route and the maximum spare cable lengths. Do not install slack coils in copper unless approved or requested by AHJ. Fiber slack coils should be min 60' in every 3rd MH or any MH where a turn is made. Form cables to closely parallel walls, not to interfere with duct entrances, and support cables on brackets and cable insulators at a maximum of 4 feet. Install cable or cables in corresponding ducts entering and exiting the manholes in straight lines, do not cross ducts or manhole. In existing manholes, handholes, and vaults where new ducts are to be terminated, or where new cables are to be installed, modify the existing installation of cables, cable supports, and grounding as required with cables arranged and supported as specified for new cables. Identify each cable with corrosion-resistant embossed metal tags. All fiber optic cables will be installed in fabric innerduct measuring min 1 inch (or larger) with min of three cells (but should maximize pathways).

3.1.9 Aerial Cable Installation

Pole installation shall be as specified in Section 33 71 01 OVERHEAD TRANSMISSION AND DISTRIBUTION. Where physical obstructions make it necessary to pull distribution wire along the line from a stationary reel, use cable stringing blocks to support wire during placing and tensioning operations. Do not place ladders, cable coils, and other equipment on or against the distribution wire. Wire shall be sagged in accordance with the data shown. Protect cable installed outside of building less than 8 feet above finished grade against physical damage.

NOTE: The installation of aerial cabling aboard Marine Corps Base, Camp Lejeune and Marine Corps Air Station, New River is not authorized.

3.1.9.1 Figure 8 Distribution Wire

Perform spiraling of the wire within 24 hours of the tensioning operation. Perform spiraling operations at alternate poles with the approximate length of the spiral being 15 feet. Do not remove insulation from support members except at bonding and grounding points and at points where ends of support members are terminated in splicing and dead-end devices. Ground support wire at poles to the pole ground.

3.1.9.2 Suspension Strand

Place suspension strand as indicated. Tension in accordance with the data indicated. When tensioning strand, loosen cable suspension clamps enough to allow free movement of the strand. Place suspension strand on the road side of the pole line. In tangent construction, point the lip of the suspension strand clamp toward the pole. At angles in the line, point the suspension strand clamp lip away from the load. In level construction place the suspension strand clamp in such a manner that it will hold the strand below the through-bolt. At points where there is an up-pull on the strand, place clamp so that it will support strand above the through-bolt. Make suspension strand electrically continuous throughout its entire length, bond to other bare cables suspension strands and connect to pole ground at each pole.

3.1.9.3 Aerial Cable

Keep cable ends sealed at all times using cable end caps. Take cable from reel only as it is placed. During placing operations, do not bend cables in a radius less than 10 times the outside diameter of cable. Place temporary supports sufficiently close together and properly tension the cable where necessary to prevent excessive bending. In those instances where spiraling of cabling is involved, accomplish mounting of enclosures for purposes of loading, splicing, and distribution after the spiraling operation has been completed.

NOTE: The installation of aerial cabling aboard Marine Corps Base, Camp Lejeune and Marine Corps Air Station, New River is not authorized.

3.1.10 Cable Splicing

3.1.10.1 Copper Conductor Splices

Perform splicing in accordance with manufacturer, best known practices, and requirements of RUS Bull 1753F-401 except that direct buried splices and

twisted and soldered splices are not allowed. Exception does not apply for pairs assigned for carrier application.

3.1.10.2 Fiber Optic Splices

Fiber optic splicing shall be in accordance with manufacturer's recommendation and shall exhibit an insertion loss not greater than 0.2 dB for fusion splices.

NOTE: The installation of Mechanical Fiber Optic Splices aboard Marine Corps Base, Camp Lejeune and Marine Corps Air Station, New River is not authorized.

3.1.11 Surge Protection

All cables and conductors, except fiber optic cable, which serve as communication lines through off-premise lines, shall have surge protection (710 input/66 output) installed at each end which meet the requirements of RUS Bull 1751F-815.

3.1.12 Grounding

Provide grounding and bonding in accordance with RUS 1755.200, TIA-607, IEEE C2, and NFPA 70. Ground exposed noncurrent carrying metallic parts of telephone equipment, cable sheaths, cable splices, and terminals.

3.1.12.1 Telecommunications Master Ground Bar (TMGB)

The TMGB is the hub of the basic telecommunications grounding system providing a common point of connection for ground from outside cable, CD, and equipment. Establish a TMGB for connection point for cable stub shields to connector blocks and CD protector assemblies as specified in Section 26 20 00 INTERIOR DISTRIBUTION SYSTEM. The TMGB will at a minimum be 4 inches by 10 inches by 1/4 inch as shown in TIA-607.

3.1.12.2 Incoming Cable Shields

Shields shall not be bonded across the splice to the cable stubs at the main distribution frame. Ground shields of incoming cables in the EF Telecommunications to the TMGB.

3.1.12.3 Campus Distributor Grounding

a. Protection assemblies: Mount CD protector assemblies directly on the telecommunications backboard. Connect assemblies mounted on each vertical frame with No. 6 AWG copper conductor to provide a low resistance path to TMGB.

b. TMGB connection: Connect TMGB to TGB with copper conductor with a total resistance of less than 0.01 ohms.

3.1.13 Cut-Over

All necessary transfers and cut-overs, shall be accomplished by the telecommunications contractor except government owned cables with active service which must be done by TSD.

3.2 LABELING

3.2.1 Labels

Provide labeling for new cabling and termination hardware located within the facility in accordance with TIA-606. Handwritten labeling is unacceptable. Stenciled lettering for cable and termination hardware shall be provided using either thermal ink transfer process or laser printer. Actual information on labels shall be obtained from TSD via contracting office.

3.2.2 Cable Tag Installation

Install cable tags for each telecommunications cable or wire located in manholes, handholes, and vaults including each splice. Tag new wire and cable provided under this contract and existing wire and cable which are indicated to have splices and terminations provided by this contract. The labeling of telecommunications cable tag identifiers shall be in accordance with TIA-606. Tag legend shall be as indicated. Do not provide handwritten letters. Install cable tags so that they are clearly visible without disturbing any cabling or wiring in the manholes, handholes, and vaults.

3.2.3 Termination Hardware

Label patch panels, distribution panels, connector blocks and protection modules using color coded labels with identifiers in accordance with TIA-606.

3.3 FIELD FABRICATED NAMEPLATE MOUNTING

Provide number, location, and letter designation of nameplates as indicated. Fasten nameplates to the device with a minimum of two sheet-metal screws or two rivets.

3.4 FIELD QUALITY CONTROL

Provide the Contracting Officer 10 working days notice prior to each test. Provide labor, equipment, and incidentals required for testing. Correct defective material and workmanship disclosed as the results of the tests. Furnish a signed copy of the test results to the Contracting Officer within 3 working days after the tests for each segment of construction are completed. Perform testing as construction progresses and do not wait until all construction is complete before starting field tests.

3.4.1 Pre-Installation Tests

Perform the following tests on cable at the job site before it is removed from the cable reel. For cables with factory installed pulling eyes, these tests shall be performed at the factory and certified test results shall accompany the cable.

3.4.1.1 Cable Capacitance

Perform capacitance tests on all pairs within a cable to determine if cable capacitance is within the limits specified.

3.4.1.2 Loop Resistance

Perform DC-loop resistance on all of the pairs within a cable to determine

if DC-loop resistance is within the manufacturer's calculated resistance.

3.4.1.3 Pre-Installation Test Results

Provide results of pre-installation tests to the Contracting Officer at least 5 working days before installation is to start. Results shall indicate reel number of the cable, manufacturer, size of cable, pairs tested, and recorded readings. When pre-installation tests indicate that cable does not meet specifications, remove cable from the job site.

3.4.2 Acceptance Tests

Perform acceptance testing in accordance with RUS Bull 1753F-201 and as further specified in this section. Provide personnel, equipment, instrumentation, and supplies necessary to perform required testing. Notification of any planned testing shall be given to the Contracting Officer at least 14 days prior to any test unless specified otherwise. Testing shall not proceed until after the Contractor has received written Contracting Officer's approval of the test plans as specified. Test plans shall define the tests required to ensure that the system meets technical, operational, and performance specifications. The test plans shall define milestones for the tests, equipment, personnel, facilities, and supplies required. The test plans shall identify the capabilities and functions to be tested. Provide test reports to TSD via Contracting officer in soft and hard copy in .pdf or .xls form showing all field tests performed, upon completion and testing of the installed system. Measurements shall be tabulated on a pair by pair or strand by strand basis. Blank forms can be provided from Base Telephone upon request.

3.4.2.1 Copper Conductor Cable

Perform the following acceptance tests in accordance with TIA-758:

a. Wire map (pin to pin continuity)

b. Continuity to remote end

c. Crossed pairs

d. Reversed pairs

e. Split pairs

f. Shorts between two or more conductors

g. Grounded pairs.

3.4.2.2 Fiber Optic Cable

Test fiber optic cable in accordance with TIA/EIA-455 and as further specified in this section. Two optical tests shall be performed on all optical fibers: Optical Time Domain Reflectometry (OTDR) Test, and Attenuation Test. These tests shall be performed on the completed end-to-end spans which include the near-end pre-connectorized single fiber cable assembly, outside plant as specified, outside plant field un-terminated at demarcation point, and the far-end pre-connectorized single fiber cable assembly.

a. OTDR Test: The OTDR test shall be used to determine the adequacy of

the cable installations by showing any irregularities, such as discontinuities, micro-bendings or improper splices for the cable span under test. Hard copy fiber signature records shall be obtained from the OTDR for each fiber in each span and shall be included in the test results. The OTDR test shall be measured in both directions. A reference length of fiber, 1000 feet minimum, used as the delay line shall be placed before the new end connector and after the far end patch panel connectors for inspection of connector signature. Conduct OTDR test and provide calculation or interpretation of results in accordance with TIA-526-7 for single-mode fiber and TIA-526-14 for multimode fiber. Splice losses shall not exceed 0.2 db.

b. Attenuation Test: End-to-end attenuation measurements shall be made on all fibers, in both directions, using a 850 & 1300 for 62.5 multi-mode fiber and 1310 & 1550 for single mode nanometer light source at one end and the optical power meter on the other end to verify that the cable system attenuation requirements are met in accordance with TIA-455-46A for multimode and TIA-526-7 for single-mode fiber optic cables. The measurement method shall be in accordance with TIA-455-78-B. Attenuation losses shall not exceed 0.5 db/km at 1310 nm and 1550 nm for single-mode fiber. Attenuation losses shall not exceed 5.0 db/km at 850 nm and 1.5 db/km at 1300 nm for multimode fiber.

c. Bandwidth Test: The end-to-end bandwidth of all multimode fiber span links shall be measured by the frequency domain method. The bandwidth shall be measured in both directions on all fibers. The bandwidth measurements shall be in accordance with TIA/EIA-455-204.

3.4.3 Soil Density Tests

a. Determine soil-density relationships for compaction of backfill material in accordance with ASTM D1557, Method D.

b. Determine soil-density relationships as specified for soil tests in Section 31 23 00.00 20 EXCAVATION AND FILL.

-- End of Section --