The Davis Community Central Service Center

1011 Porter's Neck Road
Wilmington North Carolina 28411
Permit Set
July 20, 2020

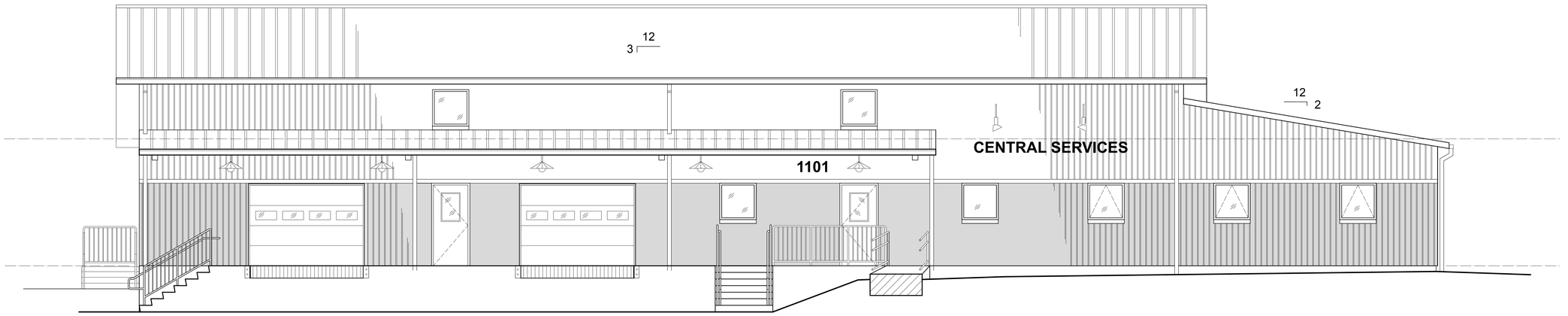

BOWMAN MURRAY HEMINGWAY
ARCHITECTS

514 Market Street Wilmington, NC 28401
phone 910.762.2621
www.bmharch.com

Civil:
Tripp Engineering
419 Chestnut Street
Wilmington, NC 28401
(910) 763-5100

Structural:
Woods Engineering
254 North Front Street, Suite 201
Wilmington, NC 28401
(910) 343-8007

Plumbing / Mechanical:
CBHF Engineers, PLLC.
2246 Yaupon Drive
Wilmington, NC 28401
(910) 791-4000

Electrical:
McFadyen Engineers, PLLC.
4411 Peachtree Ave,
Wilmington, NC 28403
(910) 399-1125

VICINITY MAP

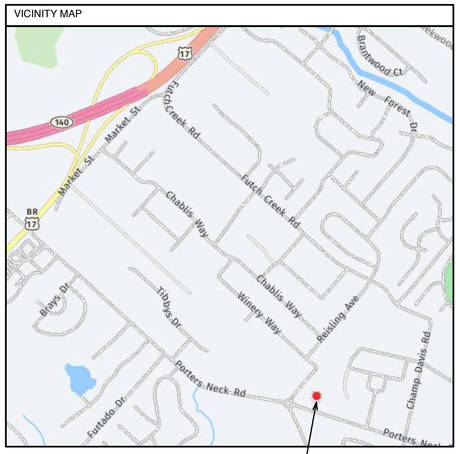

DRAWING INDEX

GENERAL:

G1.0	COVER SHEET
G1.1	APPENDIX B
G1.2	LIFE SAFETY PLANS

ARCHITECTURAL:

A100	SITE PLAN
A200	FLOOR PLANS
A300	BUILDING ELEVATIONS
A400	BUILDING SECTIONS
A700	DOOR, ROOM FINISH SCHEDULES, AND ENLARGED PLANS
A701	DOOR AND WINDOW DETAILS
A800	ROOF PLAN
A900	REFLECTED CEILING PLANS

STRUCTURAL:

S1.01	GENERAL NOTES
S1.02	TYPICAL DETAILS
S1.03	STRUCTURAL INSPECTIONS
S2.01	PEMB FOUNDATION AND MEZZANINE FRAMING PLAN
S3.01	FOUNDATION AND MEZZANINE SECTIONS
S4.01	SHEAR WALL

PLUMBING:

P001	PLUMBING SPECIFICATIONS. LEGEND. ABBREVIATIONS AND LOADS
P002	PLUMBING SCHEDULES ND RISER DIAGRAM
P003	PLUMBING DETAILS
P101	PLUMBING WASTE-VENT AND DOMESTIC WATER PLANS
P201	PLUMBING NATURAL GAS AND COMPRESSED AIR PLANS AND RISER

MECHANICAL:

M001	HVAC SPECIFICATIONS, NOTES, LEGEND AND SUMMARY
M002	HVAC SCHEDULES AND DETAILS
M101	FIRST FLOOR AND MEZZANINE PLANS

ELECTRICAL:

E001	ABBREVIATIONS, LEGEND AND ENERGY SUMMARY
E002	ELECTRICAL SPECIFICATIONS
E002.1	ELECTRICAL SPECIFICATIONS
E003	POWER RISER DIAGRAMS AND DETAILS
E004	PANEL SCHEDULES AND DETAILS
E005	ELECTRICAL DETAILS
E006	LIGHTING FIXTURE SCHEDULE AND DETAILS
E007	FUNCTION FIRE ALARM AND TELECOMMUNICATION RISER DIAGRAM
E101	POWER PLANS
E102	LIGHTING PLANS
E103	SYSTEMS PLANS, LEGEND AND FIRE ALARM SYSTEM CONTROL MATRIX

BOWMAN MURRAY HEMINGWAY
ARCHITECTS
514 Market Street
Wilmington, NC 28401
Tel - (910) 762-2621
Fax - (910) 762-8506

BOWMAN, MURRAY, HEMINGWAY, ROGERS, JR. REGISTERED ARCHITECTURAL CORPORATION NORTH CAROLINA CERT. NO. 50424 WILMINGTON, N. C.

BRUCE F. BOWMAN REGISTERED ARCHITECT 5951 7-21-20

THE DAVIS COMMUNITY
Central Services Center
1011 Porter's Neck Road
Wilmington, North Carolina 28411

REV.	DATE	DESCRIPTION

NO.	DATE	ISSUE NOTE
	7-20-2020	PERMIT SET

Project Manager	Drawn By
David Ball	DB/DP
Date	**Reviewed By**
July 20, 2020	Bruce Bowman

Project ID

Sheet Title
COVER SHEET

Sheet No.
G1.0

2018 APPENDIX B
BUILDING CODE SUMMARY FOR ALL COMMERCIAL PROJECTS

REFER TO SHEET G1.2 FOR LIFE SAFETY PLAN

Name of Project: The Davis Community Central Service Center
Address: 1011 Porters Neck Road, Wilmington North Carolina Zip code: 28411
Owner/Authorized Agent: BMH Architects - Bruce Bowman Phone #: 910-762-2621 E-mail: bowman@bmharch.com
Owned by: ☐ City / County ☒ Private ☐ State
Code Enforcement Jurisdiction: ☐ City _____ ☒ County New Hanover ☐ State

CONTACT: W. Daniel Hill, AIA

DESIGNER	FIRM	NAME	LICENSE #	TELE. #	E-MAIL
Architectural	Bowman Murray Hemingway	B. Bowman	5951	910-762-2621	bowman@bmharch.com
Civil	Tripp Engineering	Phil Tripp	17374	910-763-5100	ptripp@trippengineering.com
Electrical	McFayden Engineers	Duncan McFadyan	008433	910-399-1125	dmcfadyen@mcfadyenengineers.com
Fire Alarm	McFayden Engineers	Duncan McFadyan	008433	910-399-1125	dmcfadyen@mcfadyenengineers.com
Plumbing	CBHF Engineers	Troy Grady	43801	910-791-4000	tgrady@cbhfengineers.com
Mechanical	CBHF Engineers	Troy Grady	43801	910-791-4000	tgrady@cbhfengineers.com
Sprinkler-Standpipe	NA				
Structural	Woods Engineering PA	Don Woods	19475	910-343-8007	donwoods@woodseng.com
Retaining Walls > 5' High	NA				
Other	NA				

("Other" should include firms and individuals such as truss, precast, pre-engineered, interior designers, etc.)

2018 NC BUILDING CODE: ☒ New Construction ☐ Shell/Core ☐ 1st Interior Completions ☐ Addtion ☐ Phased Construction - Shell Core

2018 NC BUILDING CODE: EXISTING: ☐ Prescriptive ☐ Alteration Level I ☐ Historic Property ☐ Repair ☐ Alteration Level II ☐ Change of Use ☐ Chapter 14 ☐ Alteration Level III

CONSTRUCTED: (date) PENDING **CURRENT OCCUPANCY(S) (Ch.3) :** _____
RENOVATED: (date) _____ **PROPOSED OCCUPANCY(S) (Ch.3) :** Business / Storage (B) / (S-1)

RISK CATEGORY (Table 1604.5) **Current:** ☐ I ☒ II ☐ III ☐ IV **Proposed:** ☐ I ☒ II ☐ III ☐ IV

BASIC BUILDING DATA:

Construction Type: ☐ I-A ☐ II-A ☐ III-A ☐ IV ☐ V-A
(check all that apply) ☐ I-B ☐ II-B ☐ III-B ☒ V-B
Sprinklers: ☒ No ☐ Partial ☐ Yes* ☐ NFPA 13 ☐ NFPA 13R ☐ NFPA 13D
Standpipes: ☒ No ☐ Yes Class ☐ I ☐ II ☐ III ☐ Wet ☐ Dry
Fire District: ☒ No ☐ Yes **Flood Hazard Area:** ☒ No ☐ Yes
Special Inspections Required: ☒ No ☐ Yes (Contact the local inspection jurisdiction for additional procedures and requirements.)

Gross Building Area Table

FLOOR	EXISTING (SQ. FT.)	NEW (SQ. FT.)	SUB-TOTAL
1st Floor		7,020 S.F.	7,020 S.F.
Mezzanine		767 S.F.	767 S.F.
Equipment Platform		141 S.F.	141 S.F.
TOTAL	0		7,928 S.F.

ALLOWABLE AREA

Primary Occupancy Classification(s):
Assembly ☐ A-1 ☐ A-2 ☐ A-3 ☐ A-4 ☐ A-5
Business ☐
Educational ☐
Factory ☐ F-1 Moderate ☐ F-2 Low
Hazardous ☐ H-1 Detonate ☐ H-2 Deflagrate ☐ H-3 Combust ☐ H-4 Health ☐ H-5 HPM
Institutional ☐ I-1 Condition ☐ 1 ☐ 2
☐ I-2 Condition ☐ 1 ☐ 2
☐ I-3 Condition ☐ 1 ☐ 2 ☐ 3 ☐ 4 ☐ 5
☐ I-4 Condition
Mercantile ☐ I-1 Condition
Residential ☐ R-1 ☐ R-2 ☐ R-3 ☐ R-4
Storage ☒ S-1 Moderate ☐ S-2 Low ☐ High-piled
☐ Parking Garage ☐ Open ☐ Enclosed ☐ Repair Garage
Utility and Miscellaneous ☐

Accessory Occupancy Classification(s): B - BUISNESS
Incidental Uses (Table 509): N / A
Special Uses (Chapter 4 - List Code Sections): N / A
Special Provisions: (Chapter 5 - List Code Sections): N / A
Mixed Occupancy: ☐ No ☒ Yes Separation: N / A Hr. Exception: _____

☒ **Non-Separated Use** (508.3) - The required type of construction for the building shall be determined by applying the height and area limitations for each of the applicable occupancies to the entire building. The most restrictive type of construction, so determined, shall apply to the entire building.

☐ **Separated Use** (508.4) - See below for area calculations for each story, the area of the occupancy shall be such that the sum of the ratios of the actual floor area of each use divided by the allowable floor area for each shall not exceed 1.

$$\frac{\text{Area of Occupancy A}}{\text{Allowable Area of Occupancy A}} + \frac{\text{Area of Occupancy B}}{\text{Allowable Area of Occupancy B}} \leq 1$$

N / A + _____ + _____ = _____ ≤1.00

STORY NO.	DESCRIPTION AND USE	(A) BLDG AREA PER STORY (ACTUAL)	(B) TABLE 506.2 AREA [4]	(C) AREA FOR FRONTAGE INCREASE [1,5]	(D) = (A+C) AREA PER STORY OR UNLIMITED [2,3]
1	Business (B)	8,690 S.F.	9,000	6,750	15,750
1	Storage (S-1)	8,690 S.F.	9,000	6,750	15,750

[1] Frontage area increases from Section 506.3 are computed thus:
a. Perimeter which fronts a public way or open space having 20 feet minimum width = 240' (F)
b. Total Building Perimeter = 240' (P)
c. Ratio (F/P) = 1 (F/P)
d. W = Minimum width of public way = 30' (W)
e. Percent of frontage increase : If = [F/P - 0.25] x W/30 = 1 - 0.25 x 1 = .75 (%)
Allowable Area with frontage increase:
$A_a = A_t + (NS \times I) =$ 9,000 + 9,000 (.75) = 15,750
[2] Unlimited area applicable under conditions of Section 507.
[3] Maximum Building Area = total number of stories in the building x D (maximum 3 stories) (506.2).
[4] The maximum area of open parking garages must comply with Table 406.5.4.
[5] Frontage increase is based on the unsprinklered area value in Table 506.2.

ALLOWABLE HEIGHT

	ALLOWABLE	SHOWN ON PLANS	CODE REFERENCE [1]
BUILDING HEIGHT IN FEET (TABLE 504.3) [2]	40'	28'-6"	
BUILDING HEIGHT IN STORIES (TABLE 504.4) [3]	2	1	

[1] Provide code reference if the "Shown on Plans" quantity is not based on Table 504.3 or 504.4.
[2] The maximum height of air traffic control towers must comply with table 412.3.1.
[3] The maximum height of open parking garages must comply with table 406.5.4.

FIRE PROTECTION REQUIREMENTS

BUILDING ELEMENT	FIRE SEPARATION DISTANCE (FEET)	RATING REQ'D	RATING PROVIDED (W/ ____ REDUCTION)	DETAIL # AND SHEET #	DESIGN # FOR RATED ASSEMBLY	SHEET # FOR RATED PENETRATION	SHEET # FOR RATED JOINTS
Structural frame, including columns, girders, trusses	N/A	0-hr	0-hr				
Bearing walls							
Exterior							
North	30'+	0-hr	0-hr				
East	30'+	0-hr	0-hr				
West	30'+	0-hr	0-hr				
South	30'+	0-hr	0-hr				
Interior			0-hr	0-hr				
Nonbearing walls and partitions							
Exterior Walls							
North	N/A						
East	N/A						
West	N/A						
South	N/A						
Interior Walls and partitions		0-hr	0-hr				
Floor Construction Including supporting beams and joists		0-hr	0-hr				
Floor Ceiling Assembly		0-hr	0-hr				
Columns Supporting Floors		N/A	N/A				
Roof Construction Including supporting beams & joists		0-hr	0-hr				
Roof ceiling assembly		0-hr	0-hr				
Columns supporting roof		N/A	N/A				
Shaft Enclos.- Exit		N/A	N/A				
Shaft Enclos.- Other		N/A	N/A 0-hr				
Corridor Separation		0-hr	0-hr (Fewer than 31 P. served)				
Occupancy/ Fire Barrier Separation		N/A	N/A				
Party/Fire Wall Separation		N/A	N/A				
Smoke Barrier Separation		N/A	N/A				
Tenant/ Dwelling unit/ Sleeping unit separation		N/A	N/A				
Incidental Use Separation		N/A	N/A				

*Indicate section number permitting reduction

PERCENTAGE OF WALL OPENING CALCULATIONS

FIRE SEPARATION DISTANCE (FEET) FROM PROPERTY LINES	DEGREE OF OPENINGS PROTECTION (TABLE 705.8)	ALLOWABLE AREA (%)	ACTUAL SHOWN ON PLANS (%)
30+	Unprotected / Unsprinkled	No Limit	N/A

LIFE SAFETY SYSTEM REQUIREMENTS

Emergency Lighting: ☐ No ☒ Yes
Exit Signs: ☐ No ☒ Yes
Fire Alarm: ☐ No ☒ Yes
Smoke Detection Systems: ☐ No ☒ Yes ☐ Partial
Carbon Monoxide Detection: ☒ No ☐ Yes

LIFE SAFETY PLAN REQUIREMENTS

Life Safety Plan #: 1/G1.2

☐ Fire and / or smoke rated wall locations (Chapter 7)
☐ Assumed and real property line locations (if not on the site plan)
☐ Exterior wall opening area with respect to distance to assumed property lines (705.8)
☒ Occupancy Use for each area as it relates to occupant load calculation (Table 1004.1.2)
☒ Occupant loads for each area.
☒ Exit access travel distances (1017)
☐ Common path of travel distances (Tables 1006.2.1 & 1006.3.2(1))
☒ Dead end lengths (1020.4)
☒ Clear exit widths for each exit door
☒ Maximum calculated occupant load capacity each exit door can accomodate based on egress width (1005.3)
☒ Actual occupant load for each exit door
☐ A separate schematic plan indicating where fire rated floor/ ceiling and/ or roof structure is provided for purposes of occupancy separation.
☐ Location of doors with panic hardware (1010.1.10)
☐ Location of doors with delayed egress locks and amount of delay (1010.1.9.7)
☐ Location of doors with electromagnetic egress locks (1010.1.9.9)
☐ Location of doors with hold-open devices
☐ Location of emergency escape windows (1030)
☐ The square footage of each fire area (202)
☐ The square footage of each smoke compartment for Occupancy Classification I-2 (407.5)
☐ Note any code exceptions or table notes that may have been utilized regarding items above

ACCESSIBLE DWELING UNITS (SECTION 1107)
(NOT APPLICABLE)

TOTAL UNITS	ACCESSIBLE UNITS REQUIRED	ACCESSIBLE UNITS PROVIDED	TYPE A UNITS REQUIRED	TYPE A UNITS PROVIDED	TYPE B UNITS REQUIRED	TYPE B UNITS PROVIDED	TOTAL ACCESSIBLE UNITS PROVIDED

ACCESSIBLE PARKING (SECTION 1106)

LOT OR PARKING AREA	TOTAL # OF PARKING SPACES		# OF ACCESSIBLE SPACES PROVIDED			TOTAL # ACCESSIBLE PROVIDED
	REQUIRED	PROVIDED	REGULAR WITH 5' ACCESS AISLE	VAN SPACES WITH 132" ACCESS AISLE	VAN SPACES WITH 8' ACCESS AISLE	
Proposed	15 Min.	24	0	0	1	1
TOTAL		24				1

PLUMBING FIXTURE REQUIREMENTS (TABLE 2902.1)

USE		WATERCLOSETS			URINALS	LAVATORIES			SHOWERS / TUBS	DRINKING FOUNTAINS	
		MALE	FEMALE	UNISEX		MALE	FEMALE	UNISEX		REGULAR	ACCESSIBLE
SPACE	EXIST'G										
	NEW			2	0			2		1	1
	REQ'D	1	1		0	1	1			1	1

PLUMBING FIXTURE CALCULATIONS

Total Occupancy Load = 29 Occupants
11 Male
11 Female

Business (Office)
846 s.f.
846 s.f. / 100 gross = 8.46 = 8 occupants

Storage
5,378 s.f.
5,378 s.f. / 300 gross = 17.92 = 18 occupants

Mezzanine Storage
908 s.f.
908 s.f. / 300 gross = 3.02 = 3 occupants

8 + 18 + 3 = 21 occupants

Women / Men Ratio = 50/50
35/ 2 = 18 men & 18 women
Watercloset = 1 per 25 for first 50 Occup. and 1 per 50 for remaining occupants exceeding 50
Lavatories = 1 per 40 for the first 80 and 1 per 80 for the remainder exceeding 80
Drinking Fountain = 1 per 100

SPECIAL APPROVALS

Special approval: (Local Jurisdiction, Department of Insurance, OSC, DPI, DHHS, etc., describe below)
Local Jurisdiction - New Hanover County Inspections

ENERGY SUMMARY

ENERGY REQUIREMENTS:
The following data shall be considered minimum and any special attribute required to meet the North Carolina Energy Conservation Code shall also be provided. Each Designer shall furnish the required portions of the project information for the plan data sheet. If performance method, state the annual energy cost for the standard reference design vs annual energy cost for the proposed design.

Existing building envelope complies with code: ☐ No ☒ Yes (The remainder of this section is not applicable)
Exempt Building: ☒ No ☐ Yes (Provide code or statutory reference:) _____
Climate Zone: ☒ 3A ☐ 4A ☐ 5A
Method of Compliance: Energy Code ☐ Performance ☒ Prescriptive
ASHRAE 90.1 ☒ Performance ☐ Prescriptive
(If "Other" specify source here) _____

THERMAL ENVELOPE (Prescriptive method only)

Roof/ ceiling Assembly (each assembly)
Description of assembly: Refer to Pre-Engineered Metal Building Package
U-Value of total assembly: _____
R-Value of insulation: _____
Skylights in each assembly: _____
U-Value of skylight: _____
total square footage of skylights in each assembly: _____

Exterior Walls :
Description of assembly: Refer to Pre-Engineered Metal Building Package
U-Value of total assembly: _____
R-Value of insulation: _____
Openings (windows or doors with glazing)
U-Value of assembly: _____
Solar heat gain coefficient: _____
projection factor: _____
Door R-values: _____

Walls below grade (each assembly)
Description of assembly: N/A
U-Value of total assembly: N/A
R-Value of insulation: N/A

Floors over unconditioned space (each assembly)
Description of assembly: N/A
U-Value of total assembly: N/A
R-Value of insulation: N/A

Floors slab on grade
Description of assembly: _____
U-Value of total assembly: _____
R-Value of insulation: _____
Horizontal/ vertical requirement: _____
slab heated: _____

STRUCTURAL DESIGN
(See Structural Drawings)

MECHANICAL SUMMARY
(See Mechancial Drawings)

ELECTRICAL SUMMARY
(See Electrical Drawings)

BOWMAN MURRAY HEMINGWAY
ARCHITECTS
514 Market Street
Wilmington, NC 28401
Tel - (910) 762-2621
Fax - (910) 762-8506

BOWMAN, MURRAY, HEMINGWAY, ARCHITECTS, INC. REGISTERED ARCHITECTURAL CORPORATION NORTH CAROLINA WILMINGTON, N. C. CERT. NO. 50424

BRUCE F. BOWMAN REGISTERED ARCHITECT 5951 NORTH CAROLINA
7-21-20

THE DAVIS COMMUNITY Central Service Center
1011 Porter's Neck Road
Wilmington, North Carolina 28411

REV.	DATE	DESCRIPTION

NO.	DATE	ISSUE NOTE
	7-20-2020	PERMIT SET

Project Manager	Drawn By
David Ball	DB/DP
Date	Reviewed By
July 20, 2020	Bruce Bowman
Project ID	

Sheet Title
APPENDIX B

Sheet No.
G1.1

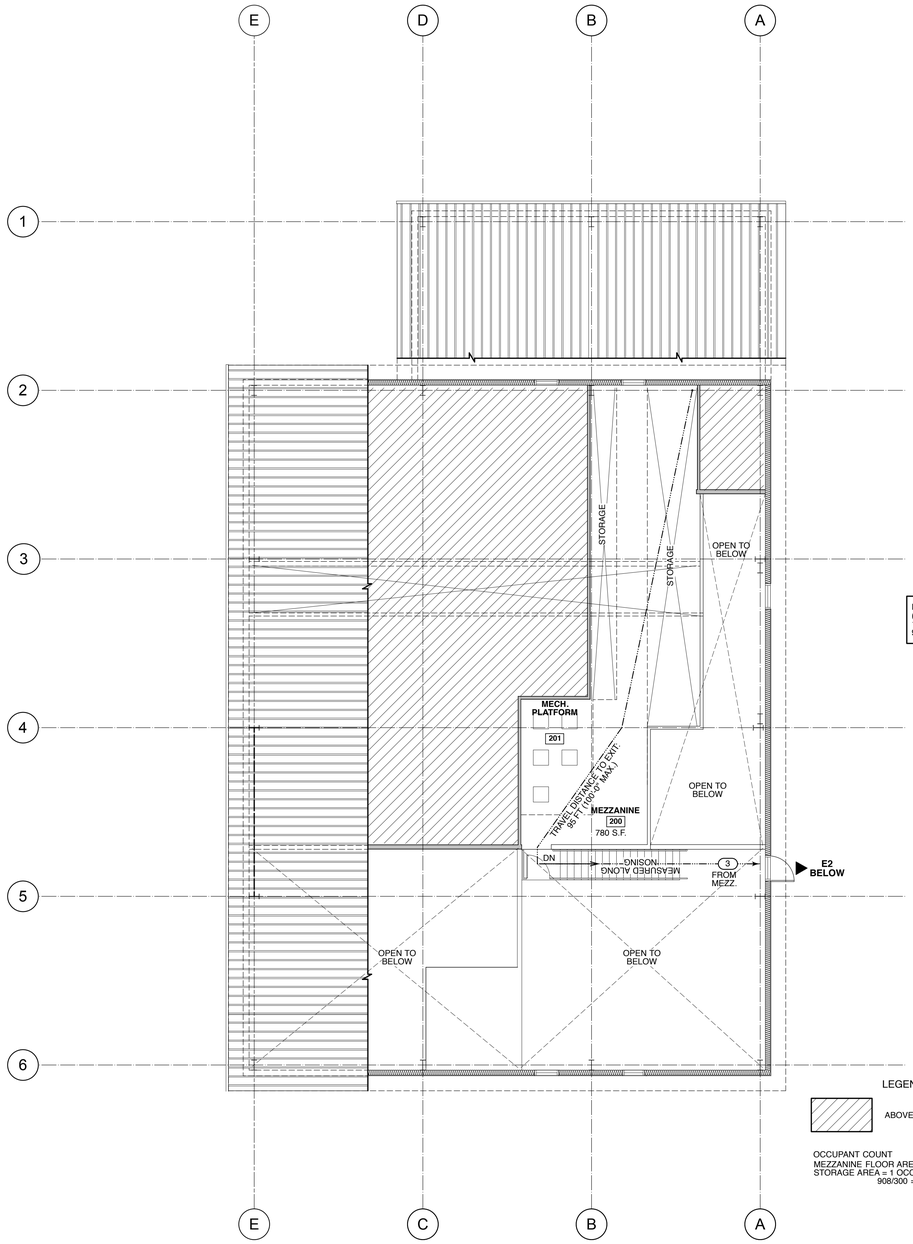

2 / G1.2 Mezzanine - Life Safety Plan
Scale: 1/8" = 1'-0"

LEGEND

ABOVE CEILING CAVITY

OCCUPANT COUNT
MEZZANINE FLOOR AREA:
STORAGE AREA = 1 OCC. PER 300 GROSS S.F.
908/300 = 3.02 = 3 OCCUPANTS

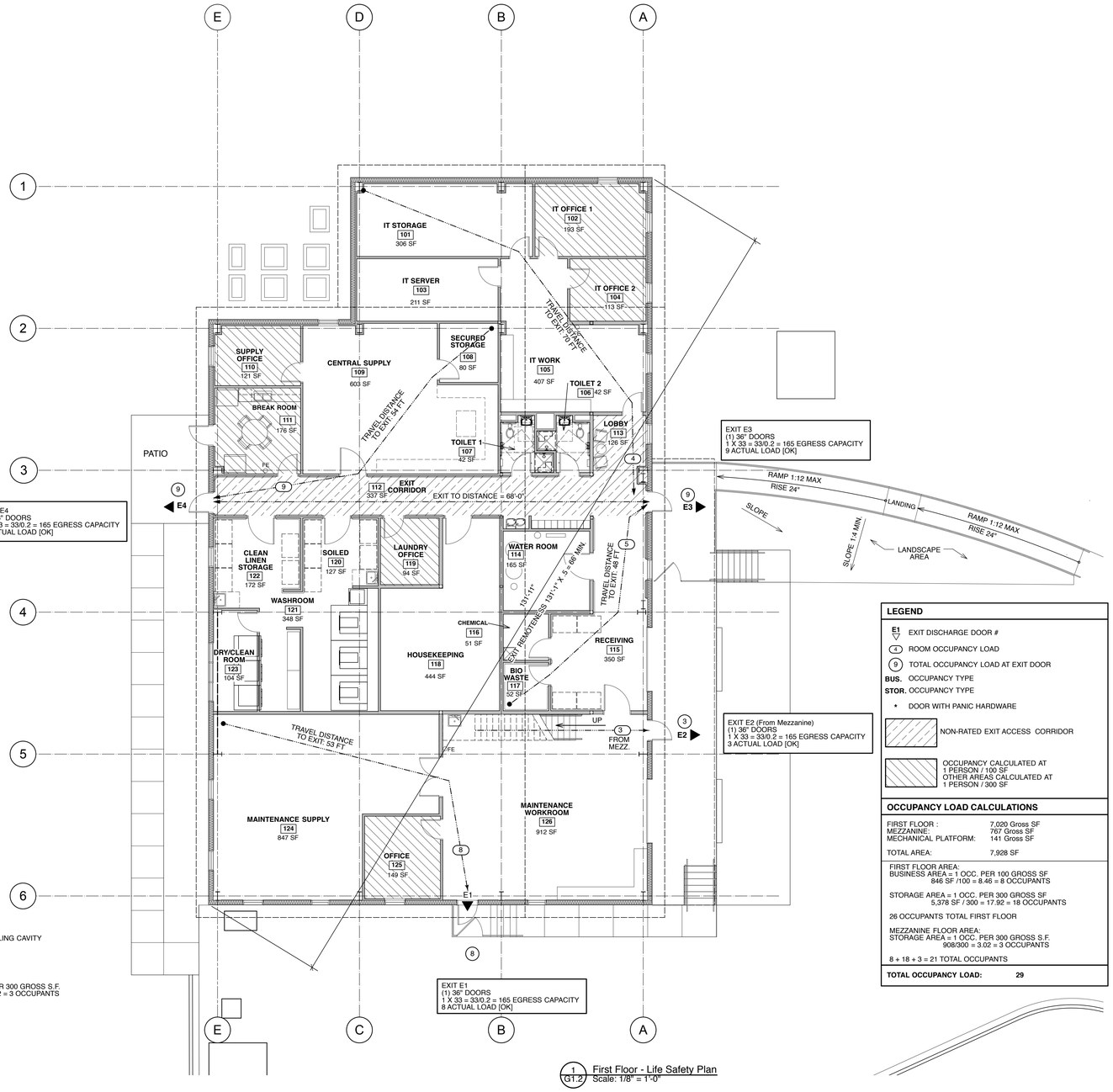

1 / G1.2 First Floor - Life Safety Plan
Scale: 1/8" = 1'-0"

LEGEND

- E1 ▽ EXIT DISCHARGE DOOR #
- (4) ROOM OCCUPANCY LOAD
- (9) TOTAL OCCUPANCY LOAD AT EXIT DOOR
- **BUS.** OCCUPANCY TYPE
- **STOR.** OCCUPANCY TYPE
- • DOOR WITH PANIC HARDWARE
- NON-RATED EXIT ACCESS CORRIDOR
- OCCUPANCY CALCULATED AT 1 PERSON / 100 SF; OTHER AREAS CALCULATED AT 1 PERSON / 300 SF

OCCUPANCY LOAD CALCULATIONS

FIRST FLOOR :	7,020 Gross SF
MEZZANINE:	767 Gross SF
MECHANICAL PLATFORM:	141 Gross SF
TOTAL AREA:	7,928 SF

FIRST FLOOR AREA:
BUSINESS AREA = 1 OCC. PER 100 GROSS SF
846 SF /100 = 8.46 = 8 OCCUPANTS

STORAGE AREA = 1 OCC. PER 300 GROSS SF
5,378 SF / 300 = 17.92 = 18 OCCUPANTS

26 OCCUPANTS TOTAL FIRST FLOOR

MEZZANINE FLOOR AREA:
STORAGE AREA = 1 OCC. PER 300 GROSS S.F.
908/300 = 3.02 = 3 OCCUPANTS

8 + 18 + 3 = 21 TOTAL OCCUPANTS

TOTAL OCCUPANCY LOAD: 29

BOWMAN MURRAY HEMINGWAY
ARCHITECTS
514 Market Street
Wilmington, NC 28401
Tel - (910) 762-2621
Fax - (910) 762-8506

BOWMAN, MURRAY, HEMINGWAY, ROBERTS, JR. REGISTERED ARCHITECTURAL CORPORATION NORTH CAROLINA WILMINGTON, N.C. CERT. NO. 50424

BRUCE F. BOWMAN REGISTERED ARCHITECT 5951 NORTH CAROLINA 7-21-20

THE DAVIS COMMUNITY
Central Services Center
1011 Porter's Neck Road
Wilmington, North Carolina 28411

REV.	DATE	DESCRIPTION
	7-20-2020	PERMIT SET

NO.	DATE	ISSUE NOTE

Project Manager: David Ball	Drawn By: DB/DP
Date: July 20, 2020	Reviewed By: Bruce Bowman
Project ID	

Sheet Title
LIFE SAFETY PLANS

Sheet No.
G1.2

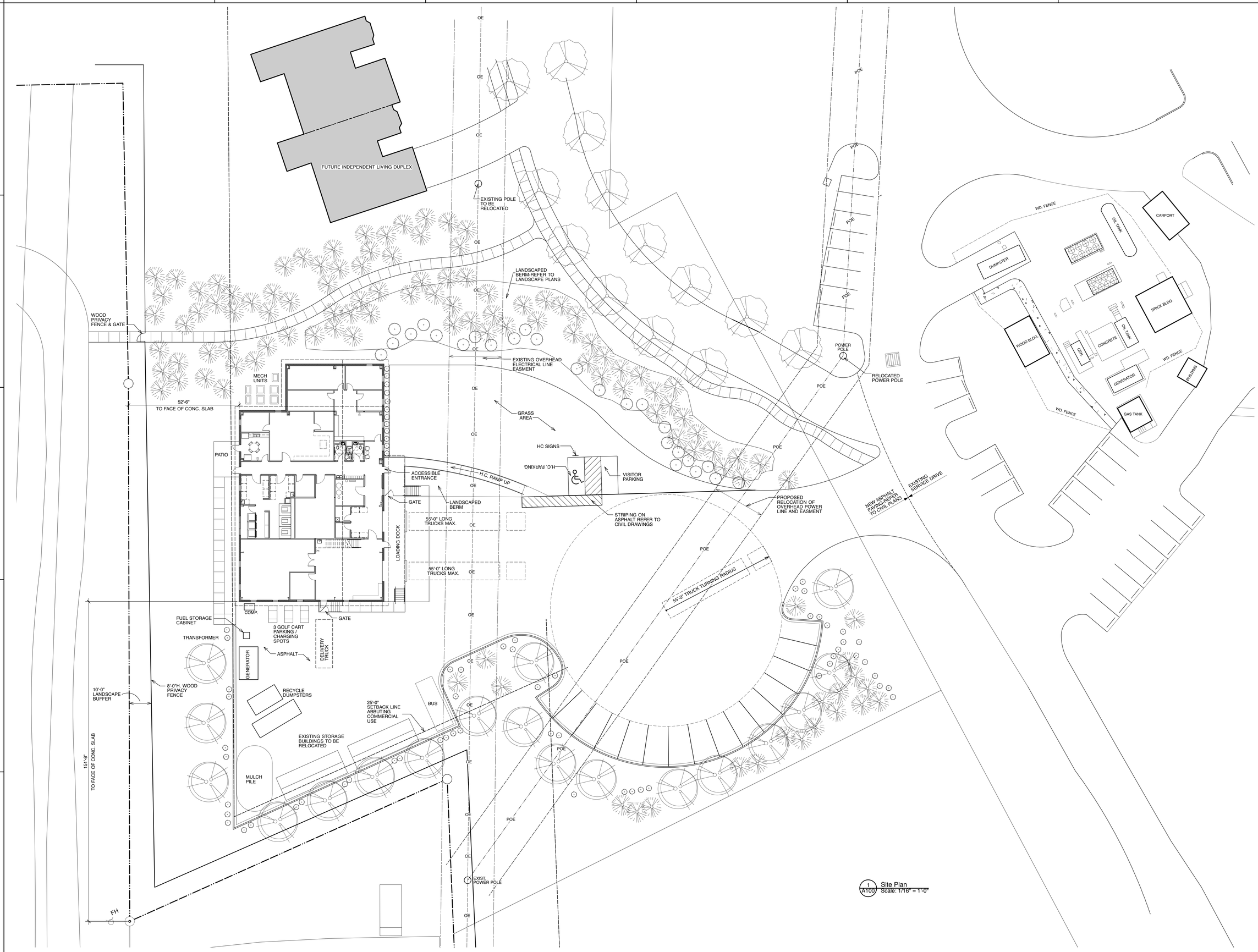

1 A100 Site Plan
Scale: 1/16" = 1'-0"

BOWMAN MURRAY HEMINGWAY
ARCHITECTS
514 Market Street
Wilmington, NC 28401
Tel - (910) 762-2621
Fax - (910) 762-8506

BOWMAN, MURRAY, HEMINGWAY, INCORPORATED REGISTERED ARCHITECTURAL CORPORATION CERT. NO. 50424 NORTH CAROLINA WILMINGTON, N.C.

BRUCE F. BOWMAN REGISTERED ARCHITECT 5951 NORTH CAROLINA 7.21.20

THE DAVIS COMMUNITY
Central Services Center

1011 Porter's Neck Road
Wilmington, North Carolina 28411

REV.	DATE	DESCRIPTION

NO.	DATE	ISSUE NOTE
	7-20-2020	PERMIT SET

Project Manager	Drawn By
David Ball	DB/DP
Date	Reviewed By
July 20, 2020	Bruce Bowman

Project ID

Sheet Title

SITE PLAN

Sheet No.

A100

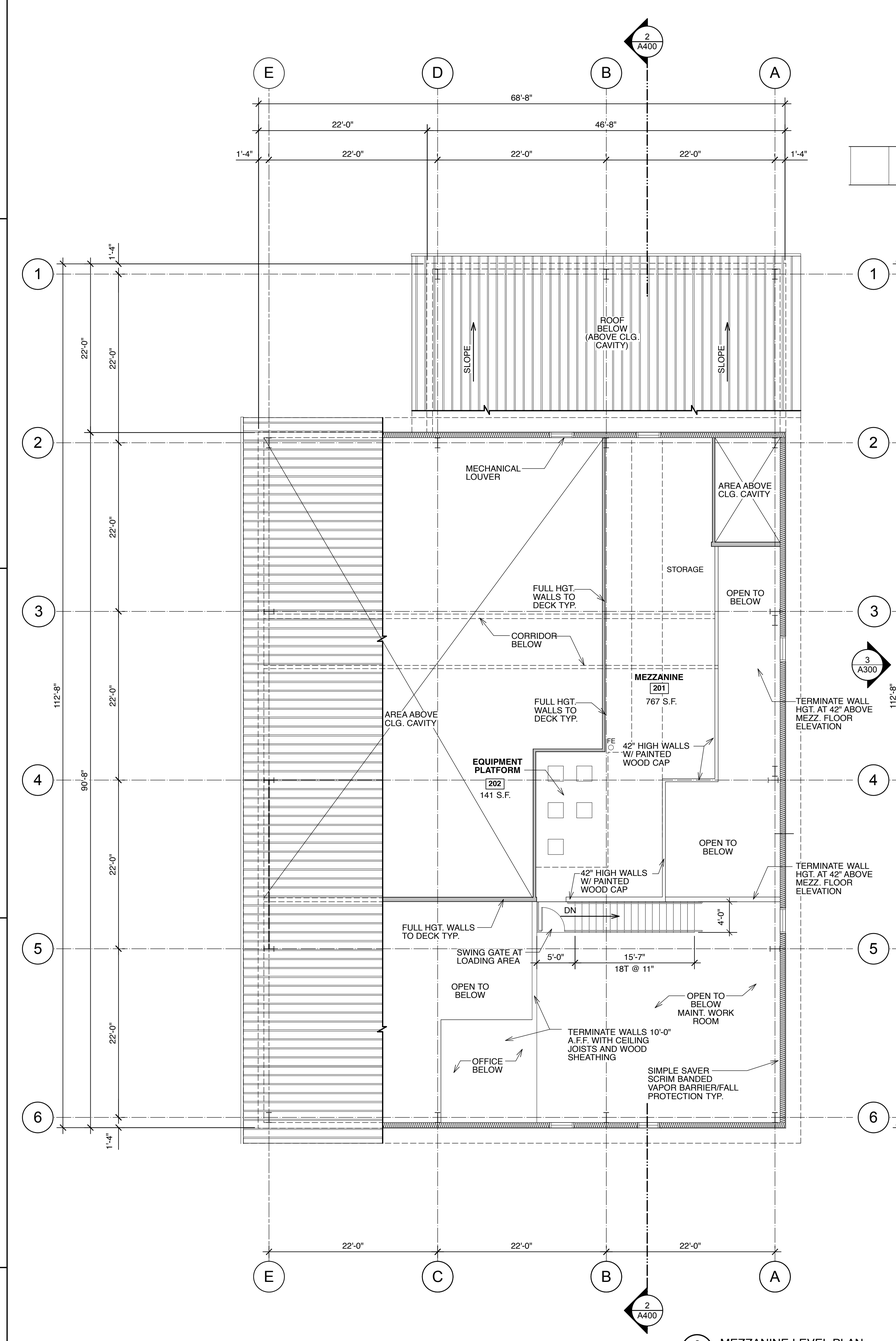

2 MEZZANINE LEVEL PLAN
Scale: 1/8" = 1'-0"

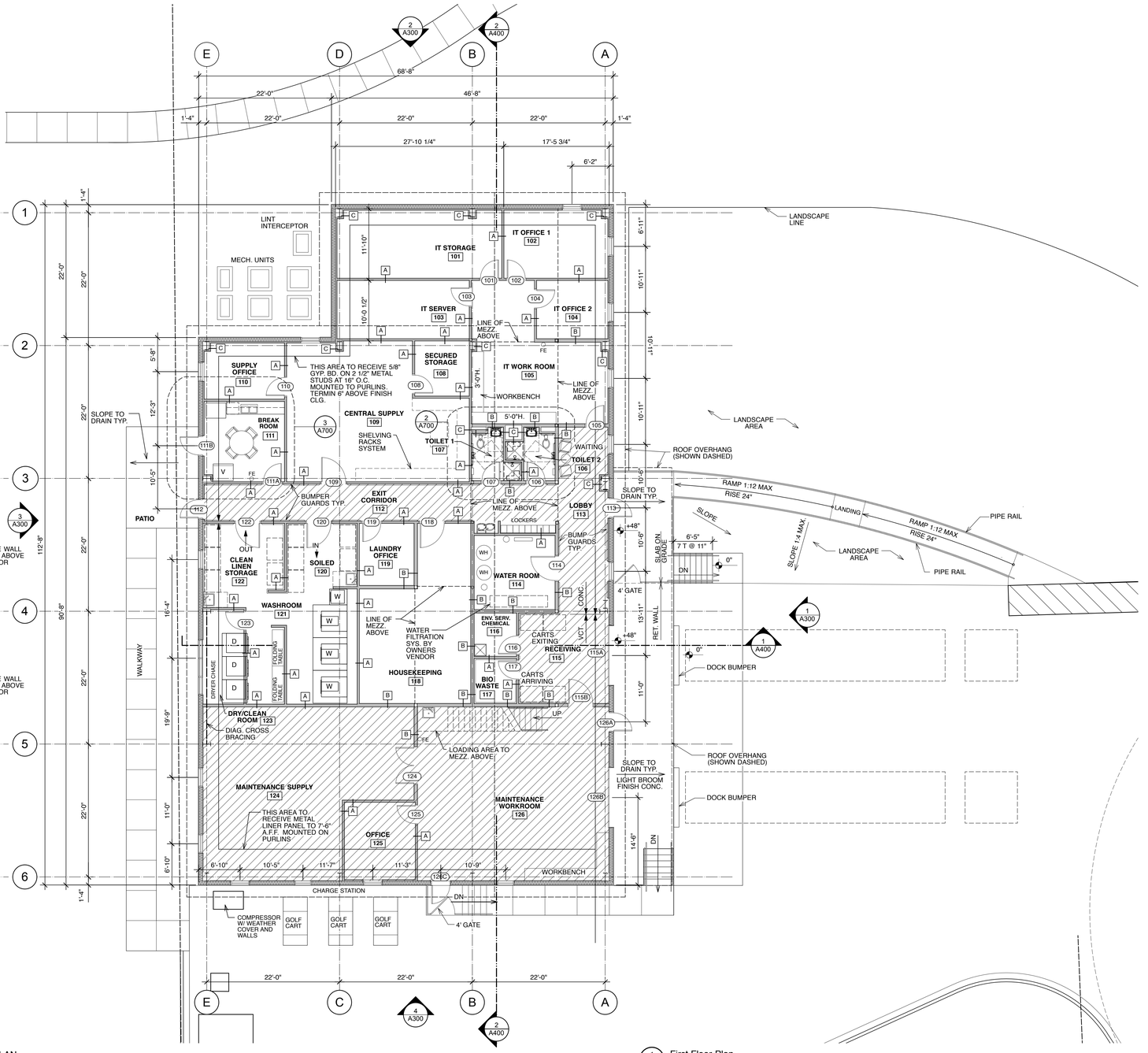

1 First Floor Plan
Scale: 1/8" = 1'-0"

LEGEND

A	PARTITION TYPES, SEE SHEET A-6.1
101	DOOR DESIGNATION
A	WINDOW / LOUVER DESIGNATION
D.S.	GUTTER DOWNSPOUT LOCATION - REFER TO 2/A2.1 FOR CONNECTION DETAIL
F.E.C.	FIRE EXTINGUISHER CABINET - COORDINATE LOCATION WITH FIRE MARSHALL PRIOR TO INSTALLATION
E.W.C	ELECTRIC WATER COOLER - SEE PLUMBING DRAWINGS
	MEZZANINE AREA OPEN TO FLOOR BELOW = 2,447 SF MEZZANINE AREA = 908 SF 2,414 / 33% = 798
FE	FIRE EXTINGUISHER AND WALL BRACKET

BOWMAN MURRAY HEMINGWAY
ARCHITECTS
514 Market Street
Wilmington, NC 28401
Tel - (910) 762-2621
Fax - (910) 762-8506

BOWMAN, MURRAY, HEMINGWAY, INCORPORATED REGISTERED ARCHITECTURAL CORPORATION NORTH CAROLINA WILMINGTON, N.C. CERT. NO. 50424

BRUCE F. BOWMAN REGISTERED ARCHITECT 5951 NORTH CAROLINA
7-21-20

THE DAVIS COMMUNITY
Central Services Center

1011 Porter's Neck Road
Wilmington, North Carolina 28411

REV.	DATE	DESCRIPTION

NO.	DATE	ISSUE NOTE
	7-20-2020	PERMIT SET

Project Manager	Drawn By
David Ball	DB/DP
Date	Reviewed By
July 20, 2020	Bruce Bowman

Project ID

Sheet Title

FLOOR PLANS

Sheet No.

A200

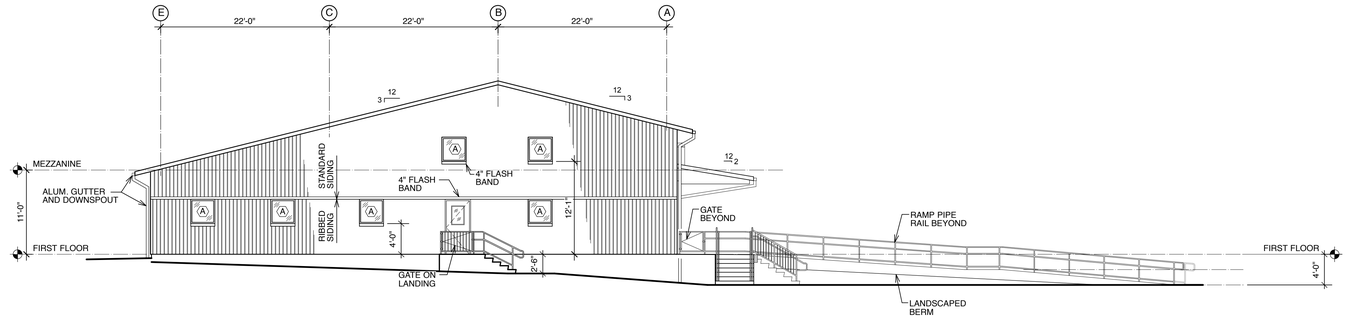

4 A300 SOUTH ELEVATION
Scale: 1/8" = 1'-0"

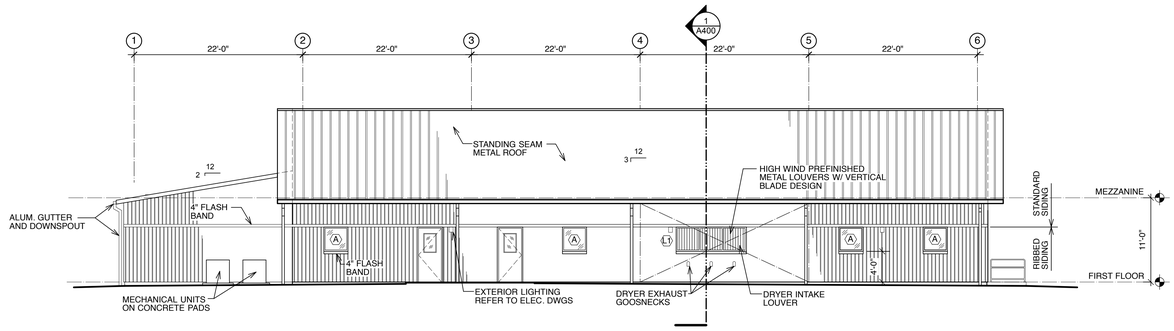

3 A300 WEST ELEVATION
Scale: 1/8" = 1'-0"

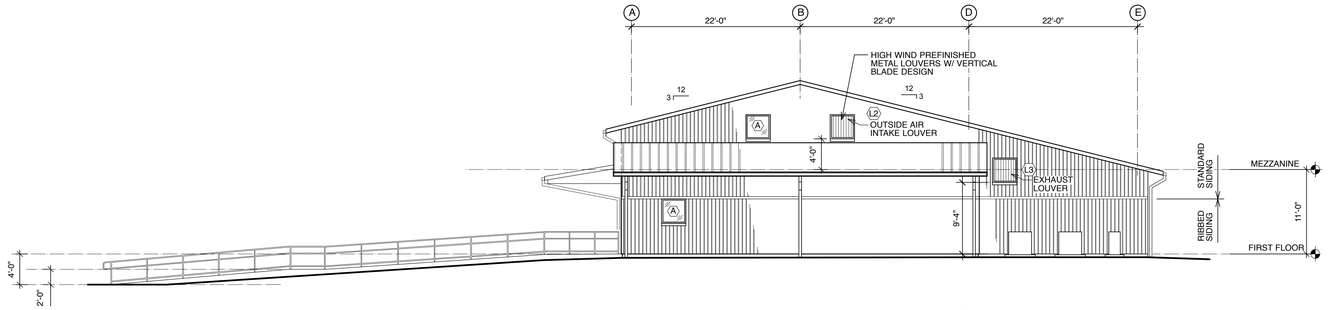

2 A300 NORTH NELEVATION
Scale: 1/8" = 1'-0"

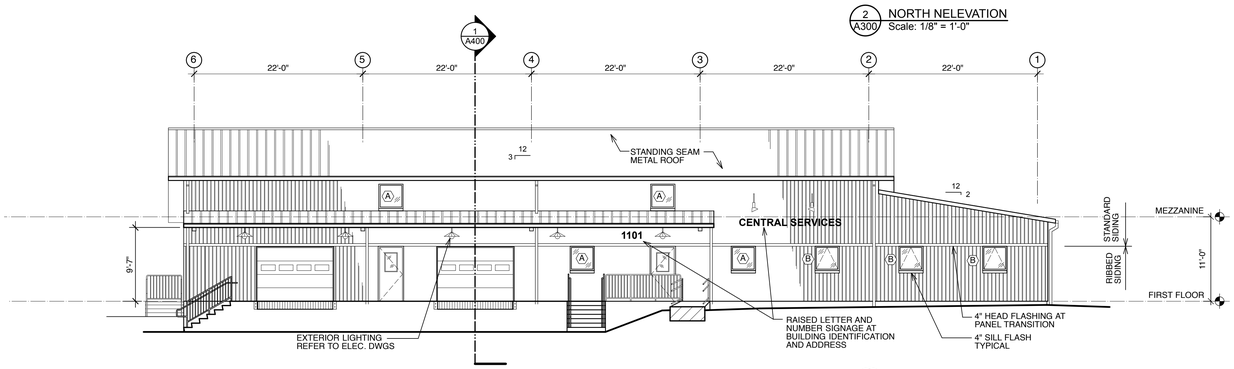

1 A300 EAST ELEVATION
Scale: 1/8" = 1'-0"

BOWMAN MURRAY HEMINGWAY
ARCHITECTS
514 Market Street
Wilmington, NC 28401
Tel - (910) 762-2621
Fax - (910) 762-8506

BOWMAN, MURRAY, HEMINGWAY, INCORPORATED REGISTERED ARCHITECTURAL CORPORATION NORTH CAROLINA WILMINGTON, N.C. CERT. NO. 50424

BRUCE F. BOWMAN REGISTERED ARCHITECT 5951
7-21-20

THE DAVIS COMMUNITY
Central Services Center

1011 Porter's Neck Road
Wilmington, North Carolina 28411

REV.	DATE	DESCRIPTION

NO.	DATE	ISSUE NOTE
	7-20-2020	PERMIT SET

Project Manager	Drawn By
David Ball	DB/DP
Date	Reviewed By
July 20, 2020	Bruce Bowman

Project ID

Sheet Title

BUILDING ELEVATIONS

Sheet No.

A300

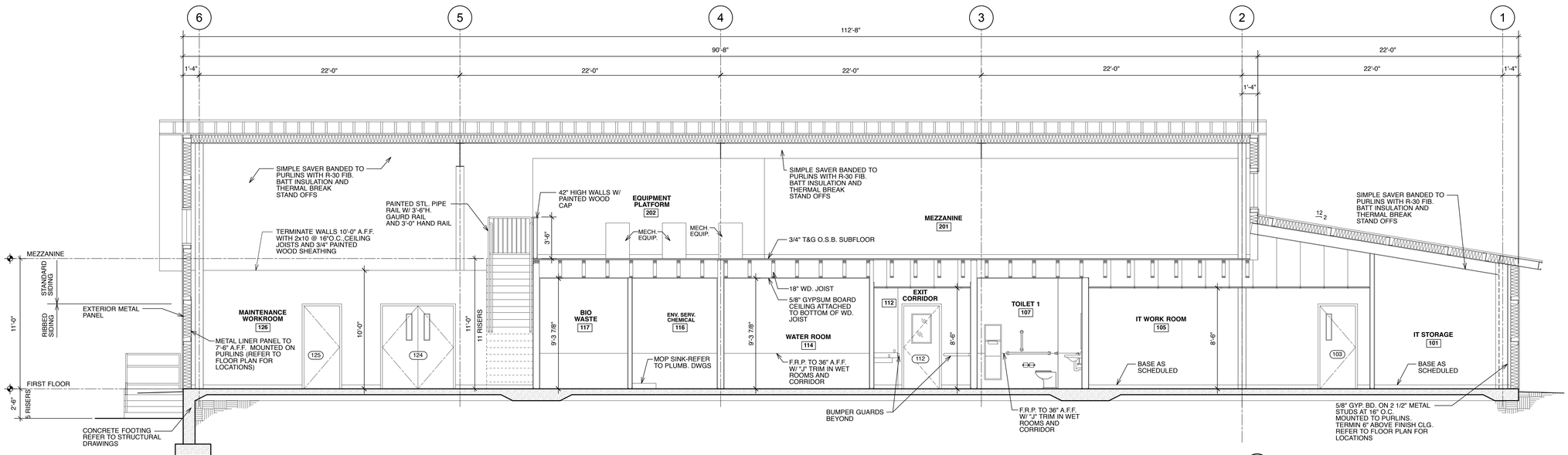

2 A400 Building Section
Scale: 1/4" = 1'-0"

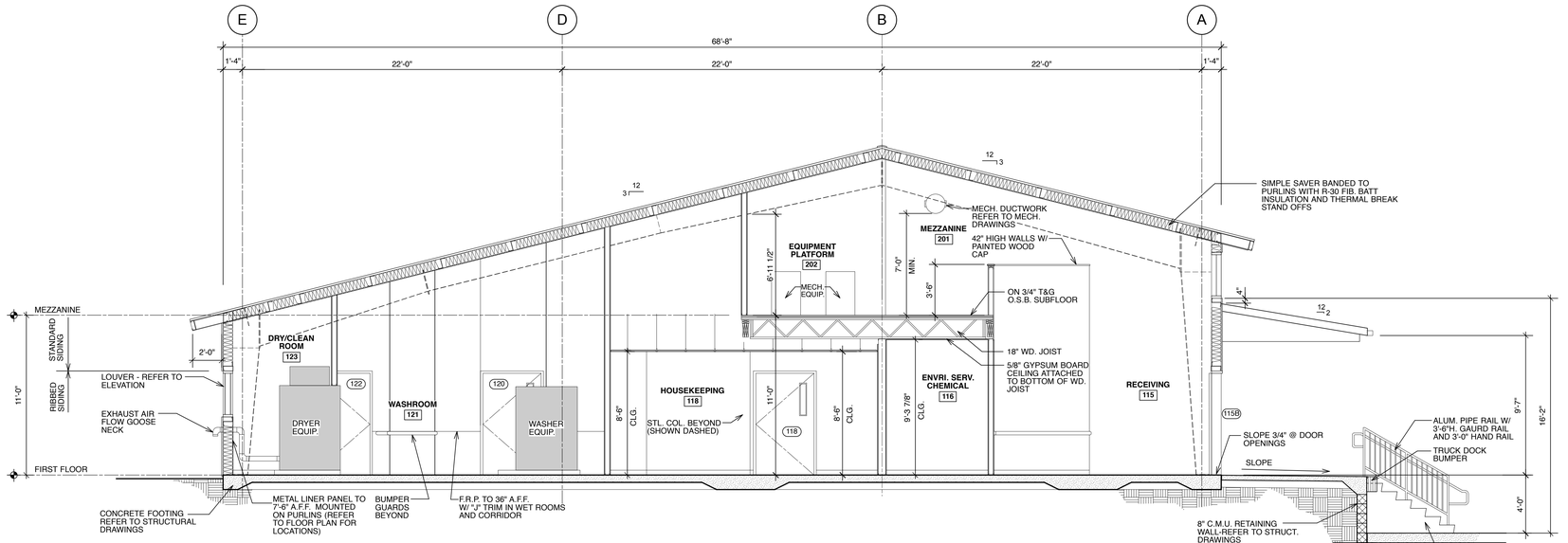

1 A400 Building Section
Scale: 1/4" = 1'-0"

BOWMAN MURRAY HEMINGWAY
ARCHITECTS
514 Market Street
Wilmington, NC 28401
Tel - (910) 762-2621
Fax - (910) 762-8506

BOWMAN, MURRAY, HEMINGWAY, ROGERS, JR. REGISTERED ARCHITECTURAL CORPORATION NORTH CAROLINA WILMINGTON, N.C. CERT. NO. 50424

BRUCE F. BOWMAN REGISTERED ARCHITECT 5951 NORTH CAROLINA
7-21-20

THE DAVIS COMMUNITY
Central Services Center

1011 Porter's Neck Road
Wilmington, North Carolina 28411

REV.	DATE	DESCRIPTION

NO.	DATE	ISSUE NOTE
	7-20-2020	PERMIT SET

Project Manager	Drawn By
David Ball	DB/DP
Date	Reviewed By
July 20, 2020	Bruce Bowman

Project ID

Sheet Title

BUILDING SECTIONS

Sheet No.

A400

Window Schedule

SYM.	SIZE: WxH (frame size)	TYPE	MATERIAL	GLAZING	EXT. FINISH	INT. FINISH	NOTES:	SYM.
A	3'-2" x 3'-2"	FIXED WINDOW	ALUMINUM	1" INSULATED	FACTORY FINISH	FACTORY FINISH		A
B	3'-2" x 3'-2"	AWNING WINDOW	ALUMINUM	1" INSULATED	FACTORY FINISH	FACTORY FINISH		B
L1	(3) 3'-2" x 3'-2"	MECH. LOUVER	ALUMINUM		KYNAR FINISH	KYNAR FINISH	HURRICANE LOUVER W/ BIRD SCREEN - REFER TO 1/A701	C
L2	3'-2" x 3'-2"	MECH. LOUVER	ALUMINUM		KYNAR FINISH	KYNAR FINISH	HURRICANE LOUVER W/ BIRD SCREEN - REFER TO 1/A701	D
L3	3'-2" x 3'-2"	MECH. LOUVER	ALUMINUM		KYNAR FINISH	KYNAR FINISH	HURRICANE LOUVER W/ BIRD SCREEN - REFER TO 1/A701	

Door Schedule

NO.	SIZE: WxHxT	DOOR MAT.	FRAME MAT.	ELEVATION DOOR	ELEVATION FRAME	HDW.	DOOR FINISH	FRAME FINISH	FIRE RATING	GLAZING	NOTES	NO.
101	3'-0" x 7'-0" x 1-3/4"	HOLLOW METAL	HOLLOW METAL	D-2	F-1	HW-4	PRE-FIN. / PT.	PRE-FIN. / PT.				101
102	3'-0" x 7'-0" x 1-3/4"	HOLLOW METAL	HOLLOW METAL	D-2	F-1	HW-3	PRE-FIN. / PT.	PRE-FIN. / PT.		1/4" TEMP.		102
103	3'-0" x 7'-0" x 1-3/4"	HOLLOW METAL	HOLLOW METAL	D-2	F-1	HW-3	PRE-FIN. / PT.	PRE-FIN. / PT.		1/4" TEMP.		103
104	3'-0" x 7'-0" x 1-3/4"	HOLLOW METAL	HOLLOW METAL	D-2	F-1	HW-3	PRE-FIN. / PT.	PRE-FIN. / PT.		1/4" TEMP.		104
105	3'-0" x 7'-0" x 1-3/4"	HOLLOW METAL	HOLLOW METAL	D-2	F-1	HW-3	PRE-FIN. / PT.	PRE-FIN. / PT.		1/4" TEMP.		105
106	3'-0" x 7'-0" x 1-3/4"	HOLLOW METAL	HOLLOW METAL	D-1	F-1	HW-6	PRE-FIN. / PT.	PRE-FIN. / PT.				106
107	3'-0" x 7'-0" x 1-3/4"	HOLLOW METAL	HOLLOW METAL	D-1	F-1	HW-6	PRE-FIN. / PT.	PRE-FIN. / PT.				107
108	3'-0" x 7'-0" x 1-3/4"	HOLLOW METAL	HOLLOW METAL	D-1	F-1	HW-5	PRE-FIN. / PT.	PRE-FIN. / PT.				108
109	4'-0" x 7'-0" x 1-3/4"	HOLLOW METAL	HOLLOW METAL	D-2	F-2	HW-7	PRE-FIN. / PT.	PRE-FIN. / PT.		1/4" TEMP.		109
110	3'-0" x 7'-0" x 1-3/4"	HOLLOW METAL	HOLLOW METAL	D-2	F-1	HW-3	PRE-FIN. / PT.	PRE-FIN. / PT.		1/4" TEMP.		110
111A	3'-0" x 7'-0" x 1-3/4"	HOLLOW METAL	HOLLOW METAL	D-2	F-1	HW-3	PRE-FIN. / PT.	PRE-FIN. / PT.		1/4" TEMP.		111A
111B	3'-0" x 7'-0" x 1-3/4"	HOLLOW METAL	HOLLOW METAL	D-3	F-1	HW-2	GALV / PT.	PRE-FIN. / PT.		1" INSUL. TEMP.		111B
112	3'-0" x 7'-0" x 1-3/4"	HOLLOW METAL	HOLLOW METAL	D-3	F-1	HW-1	GALV / PT.	PRE-FIN. / PT.		1" INSUL. TEMP.		112
113	3'-0" x 7'-0" x 1-3/4"	HOLLOW METAL	HOLLOW METAL	D-3	F-1	HW-1	GALV / PT.	PRE-FIN. / PT.		1" INSUL. TEMP.		113
114	4'-0" x 7'-0" x 1-3/4"	HOLLOW METAL	HOLLOW METAL	D-1	F-2	HW-7	PRE-FIN. / PT.	PRE-FIN. / PT.				114
115A	7'-0" x 10'-0"	INSUL. PANEL	STEEL	D-4	F-4	HW-9	PRE-FIN. / PT.	PRE-FIN. / PT.		INSUL.		115A
115B	4'-0" x 7'-0" x 1-3/4"	HOLLOW METAL	HOLLOW METAL	D-2	F-2	HW-4	PRE-FIN. / PT.	PRE-FIN. / PT.		1/4" TEMP.		115B
116	3'-0" x 7'-0" x 1-3/4"	HOLLOW METAL	HOLLOW METAL	D-1	F-1	HW-4	PRE-FIN. / PT.	PRE-FIN. / PT.				116
117	3'-0" x 7'-0" x 1-3/4"	HOLLOW METAL	HOLLOW METAL	D-1	F-1	HW-4	PRE-FIN. / PT.	PRE-FIN. / PT.				117
118	4'-0" x 7'-0" x 1-3/4"	HOLLOW METAL	HOLLOW METAL	D-2	F-2	HW-5	PRE-FIN. / PT.	PRE-FIN. / PT.		1/4" TEMP.		118
119	3'-0" x 7'-0" x 1-3/4"	HOLLOW METAL	HOLLOW METAL	D-2	F-1	HW-3	PRE-FIN. / PT.	PRE-FIN. / PT.		1/4" TEMP.		119
120	4'-0" x 7'-0" x 1-3/4"	HOLLOW METAL	HOLLOW METAL	D-2	F-2	HW-5	PRE-FIN. / PT.	PRE-FIN. / PT.		1/4" TEMP.		120
122	4'-0" x 7'-0" x 1-3/4"	HOLLOW METAL	HOLLOW METAL	D-2	F-2	HW-5	PRE-FIN. / PT.	PRE-FIN. / PT.		1/4" TEMP.		122
123	3'-0" x 7'-0" x 1-3/4"	HOLLOW METAL	HOLLOW METAL	D-1	F-1	HW-3	PRE-FIN. / PT.	PRE-FIN. / PT.				123
124	PR. 3'-0" x 7'-0" x 1-3/4"	HOLLOW METAL	HOLLOW METAL	D-2	F-3	HW-7	PRE-FIN. / PT.	PRE-FIN. / PT.		1/4" TEMP.		124
125	3'-0" x 7'-0" x 1-3/4"	HOLLOW METAL	HOLLOW METAL	D-2	F-1	HW-3	PRE-FIN. / PT.	PRE-FIN. / PT.		1/4" TEMP.		125
126A	3'-0" x 7'-0" x 1-3/4"	HOLLOW METAL	HOLLOW METAL	D-3	F-1	HW-1	PRE-FIN. / PT.	PRE-FIN. / PT.		1" INSUL. TEMP.		126A
126B	7'-0" x 10'-0"	INSUL. PANEL	STEEL	D-4	F-4	HW-9	PRE-FIN. / PT.	PRE-FIN. / PT.		INSUL.		126B
126C	3'-0" x 7'-0" x 1-3/4"	HOLLOW METAL	HOLLOW METAL	D-3	F-1	HW-2	GALV / PT.	PRE-FIN. / PT.		1" INSUL. TEMP.		126C

Finish Schedule

NO.	ROOM NAME	FLOOR MATERIAL	FLOOR FINISH	BASE MATERIAL	BASE FINISH	WALLS MATERIAL	WALLS FINISH	CEILING MATERIAL	CEILING FINISH	NOTES
101	IT STORAGE	VCT	FACTORY FINISH	RB-1	PRE-FINISHED	GYP. BD.	PAINT	EXPOSED	STRUCTURE	
102	IT OFFICE 1	VCT	FACTORY FINISH	RB-1	PRE-FINISHED	GYP. BD.	PAINT	EGAP	FACTORY FINISH	
103	IT SERVER	VCT	FACTORY FINISH	RB-1	PRE-FINISHED	GYP. BD.	PAINT	EGAP	EXPOSED	
104	IT OFFICE 2	VCT	FACTORY FINISH	RB-1	PRE-FINISHED	GYP. BD.	PAINT	EGAP	FACTORY FINISH	
105	IT WORK ROOM	VCT	FACTORY FINISH	RB-1	PRE-FINISHED	GYP. BD.	PAINT	EGAP	FACTORY FINISH	
106	TOILET 2	CONCRETE	LIQUID APPLIED	RB-2	PRE-FINISHED	GYP. BD.	PAINT	GYP. BD.	PAINT	WALL FINISH FRP TO 3'-6" A.F.F. PAINTED GYP. ABOVE
107	TOILET 1	CONCRETE	LIQUID APPLIED	RB-2	PRE-FINISHED	GYP. BD.	PAINT	GYP. BD.	PAINT	WALL FINISH FRP TO 3'-6" A.F.F. PAINTED GYP. ABOVE
108	SECURED STORAGE	VCT	FACTORY FINISH	RB-1	PRE-FINISHED	GYP. BD.	PAINT	EGAP	FACTORY FINISH	
109	CENTRAL SUPPLY	VCT	FACTORY FINISH	RB-1	PRE-FINISHED	GYP. BD.	PAINT	EGAP	FACTORY FINISH	
110	SUPPLY OFFICE	VCT	FACTORY FINISH	RB-1	PRE-FINISHED	GYP. BD.	PAINT	EGAP	FACTORY FINISH	
111	BREAK ROOM	VCT	FACTORY FINISH	RB-1	PRE-FINISHED	GYP. BD.	PAINT	EGAP	FACTORY FINISH	
112	EXIT CORRIDOR	VCT	FACTORY FINISH	RB-1	PRE-FINISHED	GYP. BD.	PAINT	GYP. BD.	EGAP	
113	LOBBY / WAITING	VCT	FACTORY FINISH	RB-1	PRE-FINISHED	GYP. BD.	PAINT	EXPOSED		EXPOSED ABOVE LEVEL 1 CLG.
114	WATER ROOM	CONCRETE	SEALED TROWELED	RB-2	PRE-FINISHED	GYP. BD.	PAINT	GYP. BD.	PAINT	
115	RECEIVING	CONCRETE	SEALED TROWELED	RB-1	PRE-FINISHED	GYP. BD./EXPOSED	PAINT	EXPOSED	PAINT	METAL LINER PANELS ON EXTERIOR WALLS TO 7'-6" A.F.
116	ENVIRONMENTAL SERVICE / CHEMICAL	CONCRETE	SEALED TROWELED	RB-1	PRE-FINISHED	GYP. BD.	PAINT	GYP. BD.	PAINT	WALL FINISH FRP TO 3'-6" A.F.F. PAINTED GYP. ABOVE
117	BIO WASTE	CONCRETE	SEALED TROWELED	RB-1	PRE-FINISHED	GYP. BD.	PAINT	GYP. BD.	PAINT	WALL FINISH FRP TO 3'-6" A.F.F. PAINTED GYP. ABOVE
118	HOUSEKEEPING	VCT	FACTORY FINISH	RB-1	PRE-FINISHED	GYP. BD.	PAINT	EGAP	PAINT/F.F.	
119	LAUNDRY OFFICE	VCT	FACTORY FINISH	RB-1	PRE-FINISHED	GYP. BD.	PAINT	EGAP	FACTORY FINISH	
120	SOILED	CONCRETE	LIQUID APPLIED	RB-2	PRE-FINISHED	GYP. BD.	PAINT	EXPOSED	STRUCTURE	WALL FINISH FRP TO 3'-6" A.F.F. PAINTED GYP. ABOVE
121	WASH ROOM	CONCRETE	LIQUID APPLIED	RB-2	PRE-FINISHED	GYP. BD.	PAINT	EXPOSED	STRUCTURE	WALL FINISH FRP TO 3'-6" A.F.F. PAINTED GYP. ABOVE
122	CLEAN LINEN STORAGE	CONCRETE	LIQUID APPLIED	RB-2	PRE-FINISHED	GYP. BD.	PAINT	EXPOSED	STRUCTURE	METAL LINER PANELS ON EXTERIOR WALLS TO 7'-6" A.F.
123	DRY / CLEAN ROOM	CONCRETE	LIQUID APPLIED	RB-2	PRE-FINISHED	GYP. BD./EXPOSED	PAINT	EXPOSED	STRUCTURE	
124	MAINTENANCE SUPPLY	CONCRETE	SEALED TROWELED	RB-1	PRE-FINISHED	GYP. BD./EXPOSED	PAINT	EXPOSED	STRUCTURE	METAL LINER PANELS ON EXTERIOR WALLS TO 7'-6" A.F.
125	OFFICE	VCT	FACTORY FINISH	RB-1	PRE-FINISHED	GYP. BD.	PAINT	EGAP	FACTORY FINISH	
126	MAINTENANCE WORK ROOM	CONCRETE	SEALED TROWELED	RB-1	PRE-FINISHED	GYP. BD./EXPOSED	PAINT	EXPOSED	STRUCTURE	METAL LINER PANELS ON EXTERIOR WALLS TO 7'-6" A.F.
201	MEZZANINE	STRUCTURE	PLYWOOD PAINTED	RB-1	PRE-FINISHED	GYP. BD./EXPOSED	PAINT	EXPOSED	STRUCTURE	
202	MECHANICAL PLATFORM	STRUCTURE	PLYWOOD PAINTED	RB-1	PRE-FINISHED	GYP. BD./EXPOSED	PAINT	EXPOSED	STRUCTURE	

	TOILET ACCESSORIES	MNTG. HT.
T1	Handicapped Grab Bar - 24"	36"
T2	Handicapped Grab Bar - 42"	36"
T3	Vertical Handicapped Grab Bar - 18"	40"
T4	Toilet Tissue Dispenser - Double Roll	18"
T5	Wall Mt. Soap Dispenser	40" (Bottom)
T6	Semi-Recessed Paper Towel Dispenser/Waste Rec.	48"
T7	Frame Mirror - 2'-0" Wide x 3'-0"	40" (Bottom)
T8	Coat Hook Mounted on Door	48"
T9	Handicapped Grab Bar - 24"x24"	33"-36"

NOTE: Mounting heights are to operable mechanism where applicable.

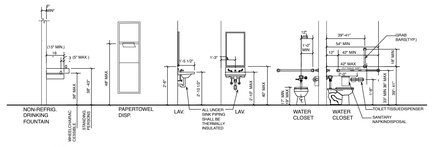

1 / A700 Enlarged Toilet Elevations
Scale: 1/4" = 1'-0"

Door Hardware

HW-1 ENTRANCE - SINGLE - FRONT/REAR
1 1/2 PR. HINGES
1 CLOSER
1 LOCKSET - ENTRANCE
1 THRESHOLD - WEATHER STRIP
HALF ARMOR PLATE ON PUSH SIDE

HW-2 EGRESS - SINGLE - OTHER EXTERIOR DOORS
1 1/2 PR. HINGES
1 CLOSER
1 LOCKSET - ENTRANCE FUNCTION (RIM PANIC)
1 THRESHOLD - WEATHER STRIP
HALF ARMOR PLATE ON PUSH SIDE

HW-3 OFFICE - SINGLE
1 1/2 PR. HINGES
1 LOCKSET - ENTRANCE / OFFICE FUNCTION

HW-4 STORAGE - SINGLE
1 1/2 PR. HINGES (2 PR. AT DOORS OVER 36" WIDE)
1 LOCKSET - STOREROOM FUNCTION
1 THRESHOLD - WEATHER STRIP
HALF ARMOR PLATE ON PUSH SIDE

HW-5 SECURED STORAGE - SINGLE - LAUNDRY, CENTRAL, SECURED, HOUSEKEEPING
2 PR. HINGES (2 PR. AT DOORS OVER 36" WIDE)
1 LOCKSET - STOREROOM FUNCTION
1 ELECTRIC STRIKE
1 CLOSER
HALF ARMOR PLATE ON PUSH SIDE
ADD AUTO DOOR OPERATOR AT LAUNDRY

HW-6 TOILET ROOM - SINGLE
1 1/2 PR. HINGES
1 LOCKSET - PRIVACY FUNCTION
1 MOP PLATE

HW-7 SERVICE DOORS - PAIR - MAINTENANCE
3 PR. HINGES
1 LOCKSET - ENTRANCE FUNCTION
1 HEAD / FOOT BOLTSET INACTIVE LEAF
2 HALF ARMOR PLATE PUSH SIDE

HW-8 NOT USED

HW-9 UPWARD ACTING SECTIONAL DOORS
10'-0" x 7'-0" INSULATED 4 PANEL WITH #2 VIEW PANEL
1 CYLINDER
BASIS OF DESIGN:
OVERHEAD DOOR COMPANY
THERMACORE DOOR SYSTEMS
EXTRA HEAVY DUTY INSULATED STEEL SECTIONAL DOOR
FINISH / COLOR : WHITE FLUSH PANEL
PANELS: 4 PANELS (#3 PANE ALUMINUM SASH SECTION)
LIFT: HIGH LIFT
OPERATION: ELECTRIC OPERATOR

DOOR HARDWARE NOTES:
1. DOOR HARDWARE SHALL BE CORBIN/RUSWINN ML2200 SERIES MORTISE LOCKSET WITH REMOVABLE CORE OR EQUAL WITH LEVER HANDLE US26D FINISH.

2. KEYWAY AND BITTING SHALL MATCH EXISTING SCHLAGE MASTER KEY SYSTEM AS DIRECTED BY OWNER'S REPRESENATIVE.

Finish Abbreviations

VCT - VINYL COMPOSITION TILE

RB-1 - BASE #1 4"H. RESILIENT BASE ON ALL GYPSUM WALLS

RB-2 - BASE #2 6"H. REINF. COVE BASE AT LIQUID APPLIED FLOORS

EGAP - EXPOSED GRID ACOUSTICAL PANEL

GYP. BD. - GYPSUM BOARD-PAINT SEMI-GLOSS ALL LOCATIONS OTHER THAN FRP OR LINER PANEL

P.T. - PAINT

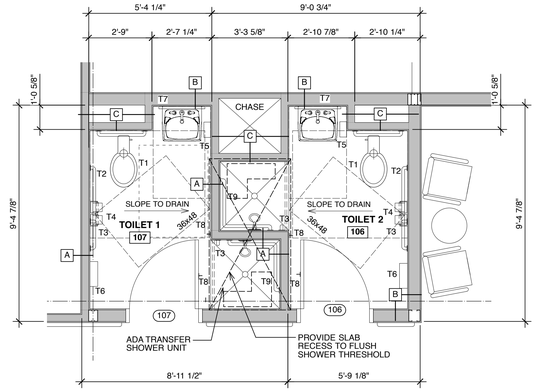

10 / A700 ENLARGED TOILET ROOM PLAN
Scale: 3/8" = 1'-0"

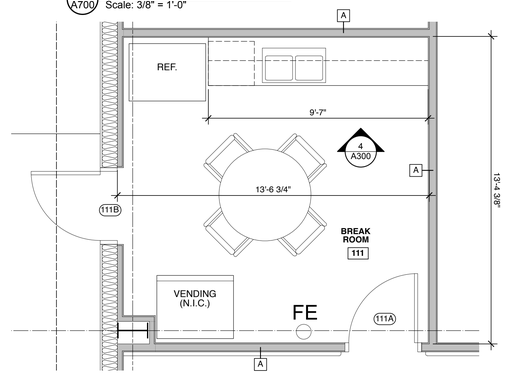

3 / A700 ENLARGED BREAK ROOM PLAN
Scale: 3/8" = 1'-0"

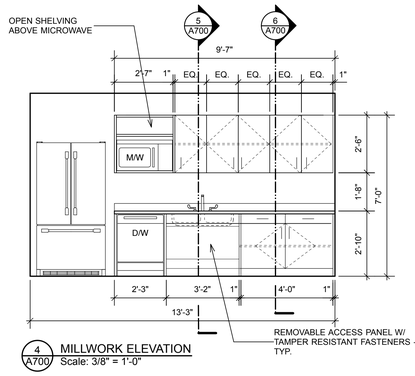

4 / A700 MILLWORK ELEVATION
Scale: 3/8" = 1'-0"

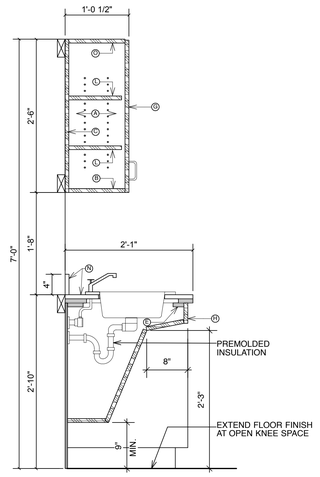

5 / A700 SECTION @ MILLWORK
Scale: 1" = 1'-0"

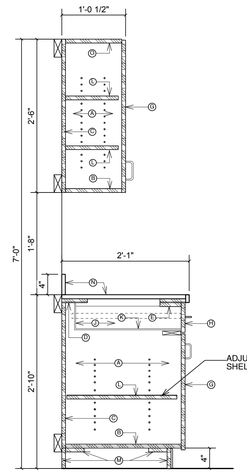

6 / A700 SECTION @ MILLWORK
Scale: 1" = 1'-0"

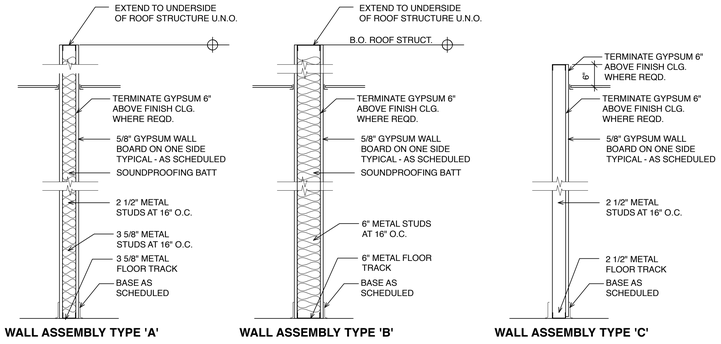

NOTES:
1. APPLY FRP ON WALLS UP TO 3'-0" A.F.F. IN THE FOLLOWING ROOMS:
ALSO APPLY BELOW BUMPER RAILS
LAUNDRY (EXCEPT DRYER CHASE)
BIO WASTE
ENV. SERVICE
TOILET 1 & 2
WATER ROOM AND AS NOTED

2. APPLY METAL LINER PANEL TO 7'-6" A.F.F. AS NOTED ON APPROX. 50% OF PERIMETER

3. PROVIDE MOISTURE RESISTANT GYPSUM BOARD AT ALL ROOMS WITH WET CONDITIONS.

4. REFER TO 2/A200 FOR PARTITONS THAT EXTEND TO STRUCTURE ABOVE

LEGEND OF MATERIALS

(A)	ENDS	3/4" MELAMINE	○ ✳
(B)	FLOOR	3/4" MELAMINE	○ ✳
(C)	BACK	1/2" MELAMINE	✳
(D)	BACK MOUNTING RAIL	3/4" MELAMINE	○ ✳
(E)	FRONT MOUNTING RAIL	3/4" MELAMINE	○ ✳
(F)	INT. MOUNTING RAIL	3/4" MELAMINE	○ ✳
(G)	DOOR	3/4" MELAMINE	○ ✳
(H)	DRAWER FRONT	3/4" MELAMINE	○ ✳
(J)	DRAWER SIDES & BACK	3/4" MELAMINE	○
(K)	DRAWER FLOOR	3/4" MELAMINE	○
(L)	SHELF	3/4" MELAMINE	○ ✳
(M)	TOE BOARD ASSEMBLY	3/4" HARDWOOD	○
(N)	COUNTERTOP/BACKSPLASH	1/2" SOLID SURFACE W/ 1-1/4" RADIUS EDGE	
(O)	WALL CABINET TOP	3/4" MELAMINE	○ ✳

○ WITH PLASTIC LAMINATE EXTERIOR
✳ WITH MATCHING EDGE

BOWMAN MURRAY HEMINGWAY
ARCHITECTS
514 Market Street
Wilmington, NC 28401
Tel - (910) 762-2621
Fax - (910) 762-8506

BOWMAN, MURRAY, HEMINGWAY, ARCHITECTS, P.A. REGISTERED ARCHITECTURAL CORPORATION NORTH CAROLINA WILMINGTON, N.C. CERT. NO. 50424

BRUCE F. BOWMAN REGISTERED ARCHITECT 5951 7-21-20

THE DAVIS COMMUNITY
Central Services Center

1011 Porter's Neck Road
Wilmington, North Carolina 28411

REV.	DATE	DESCRIPTION
	7-20-2020	PERMIT SET

NO.	DATE	ISSUE NOTE

Project Manager: David Ball	Drawn By: DB/DP
Date: July 20, 2020	Reviewed By: Bruce Bowman
Project ID	

Sheet Title
DOOR ,ROOM FINISH SCHEDULES, AND ENLARGED PLANS

Sheet No.
A700

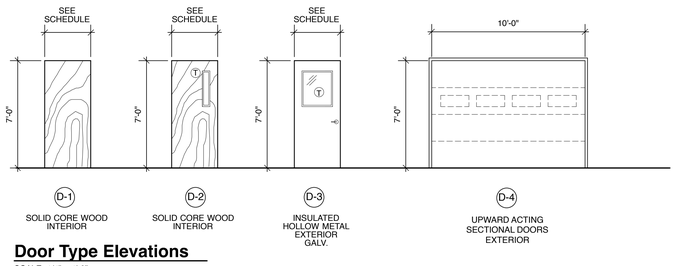

Door Type Elevations

SCALE: 1/4" = 1'-0"

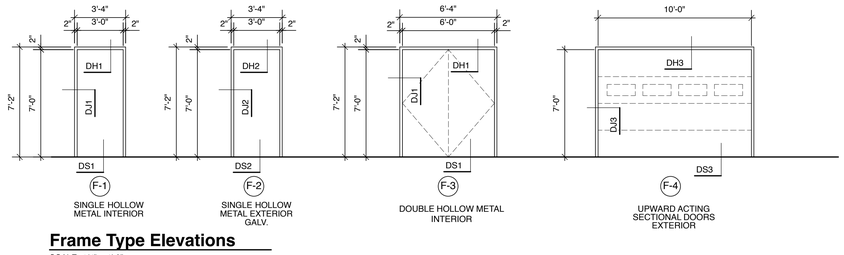

Frame Type Elevations

SCALE: 1/4" = 1'-0"

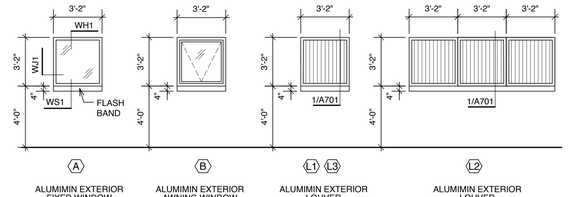

Window Type Elevations

SCALE: 1/4" = 1'-0"

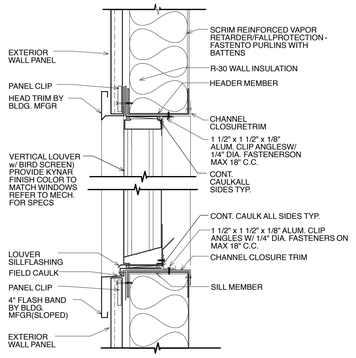

1 / A701 SECTION @ LOUVER
Scale: 1 1/2" = 1'-0"

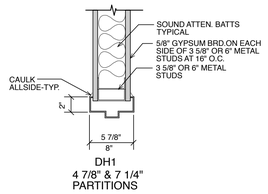

DH1
4 7/8" & 7 1/4" PARTITIONS

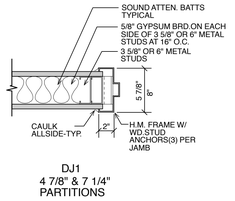

DJ1
4 7/8" & 7 1/4" PARTITIONS

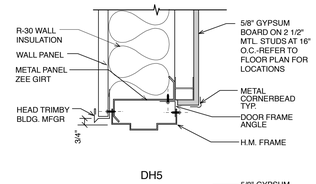

DH5

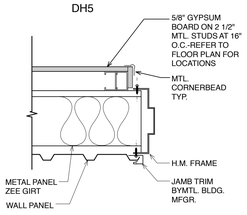

DJ5

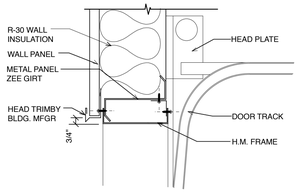

DH5

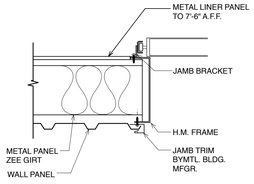

DJ5

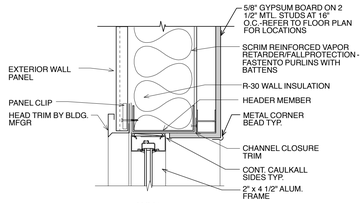

WH1

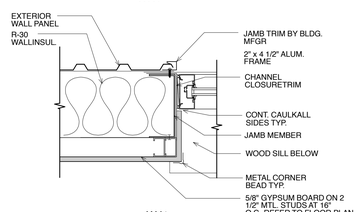

WJ1

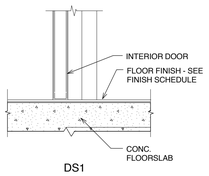

DS1
SCW DOOR@ INTERIOR

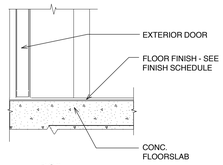

DS2
HOLLOW METAL DOOR @ EXTERIOR

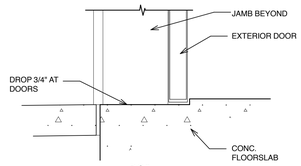

DS2
EXTERIOR SECTIONAL DOOR

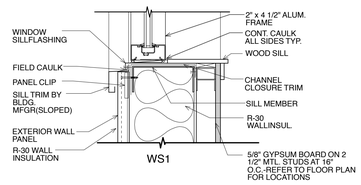

WS1

ALUMINUM WINDOW FIXED/AWNING

2 / A701 DOOR AND WINDOW DETAILS
Scale: 1 1/2" = 1'-0"

BOWMAN MURRAY HEMINGWAY
ARCHITECTS
514 Market Street
Wilmington, NC 28401
Tel - (910) 762-2621
Fax - (910) 762-8506

BOWMAN, MURRAY, HEMINGWAY, INCORPORATED REGISTERED ARCHITECTURAL CORPORATION NORTH CAROLINA WILMINGTON, N.C. CERT. NO. 5/A/24

BRUCE F. BOWMAN REGISTERED ARCHITECT 5951 NORTH CAROLINA
7-21-20

THE DAVIS COMMUNITY
Central Services Offices Center

1011 Porter's Neck Road
Wilmington, North Carolina 28411

REV.	DATE	DESCRIPTION

NO.	DATE	ISSUE NOTE
	7-20-2020	PERMIT SET

Project Manager	Drawn By
David Ball	DB/DP
Date	Reviewed By
July 20, 2020	Bruce Bowman

Project ID

Sheet Title

DOOR AND WINDOW DETAILS

Sheet No.

A701

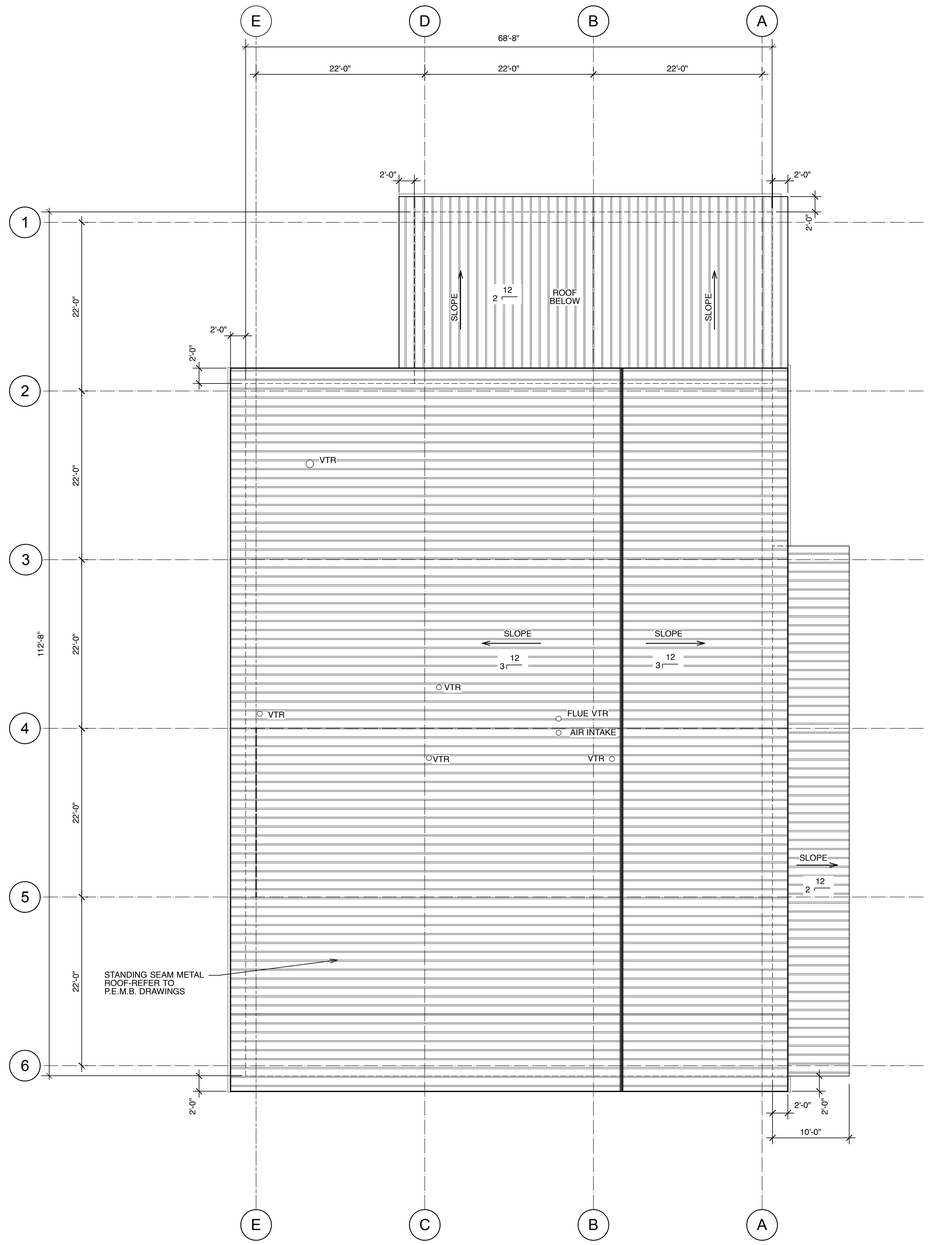

1 A800 ROOF PLAN
Scale: 1/8" = 1'-0"

BOWMAN MURRAY HEMINGWAY
ARCHITECTS
514 Market Street
Wilmington, NC 28401
Tel - (910) 762-2621
Fax - (910) 762-8506

BOWMAN, MURRAY, HEMINGWAY, ROGERS, JR. REGISTERED ARCHITECTURAL CORPORATION NORTH CAROLINA WILMINGTON, N.C. CERT. NO. 50424

BRUCE F. BOWMAN REGISTERED ARCHITECT 5951 NORTH CAROLINA

7-21-20

THE DAVIS COMMUNITY
Central Services Center

1011 Porter's Neck Road
Wilmington, North Carolina 28411

REV.	DATE	DESCRIPTION

NO.	DATE	ISSUE NOTE
	7-20-2020	PERMIT SET

Project Manager	Drawn By
David Ball	DB/DP
Date	Reviewed By
July 20, 2020	Bruce Bowman

Project ID

Sheet Title

ROOF PLAN AND DETAILS

Sheet No.

A800

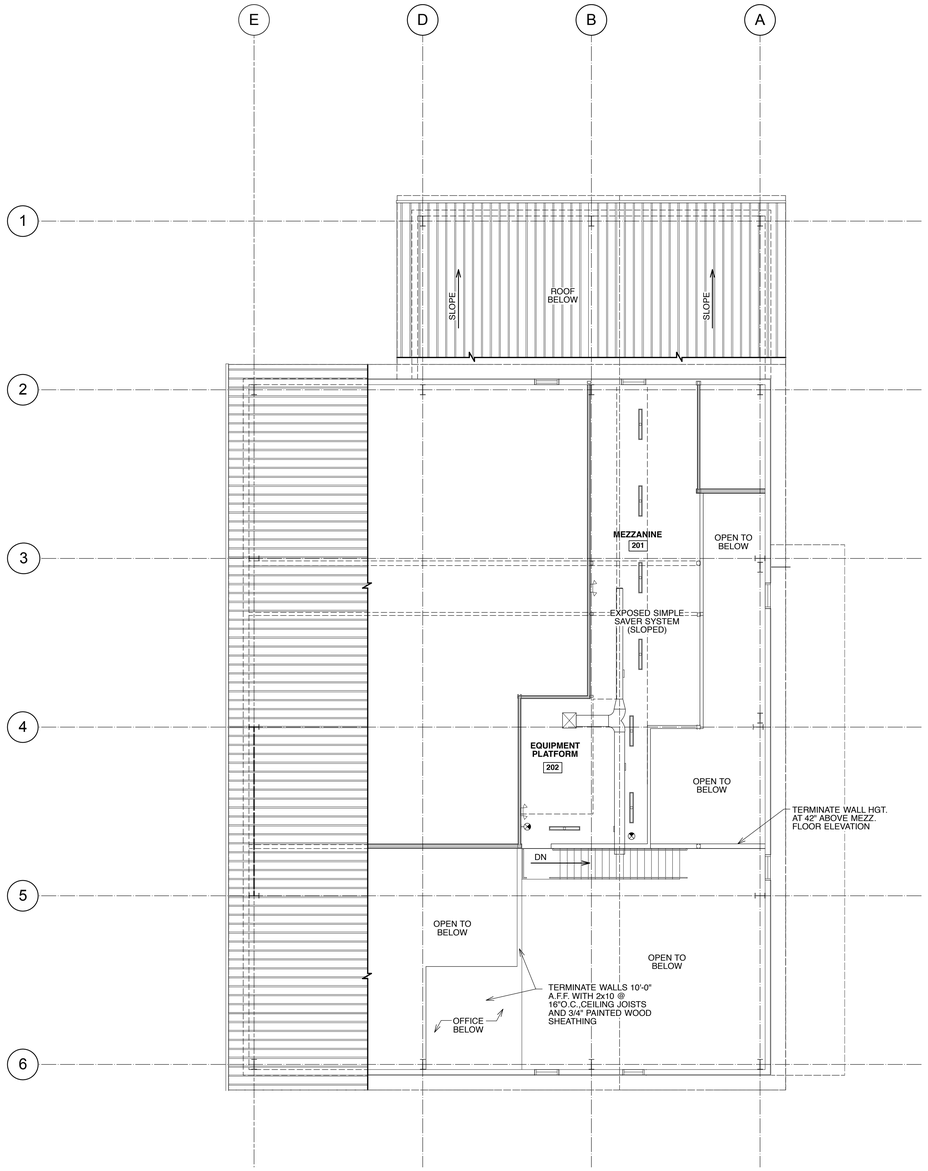

4 / A900 MEZZANINE LEVEL
Scale: 1/8" = 1'-0"



1 / A900 First Floor - Reflected Ceiling Plan
Scale: 1/8" = 1'-0"

LEGEND

- EXIT LIGHT - SEE ELECTRICAL
- EMERGENCY LIGHT FIXTURE - SEE ELECT.
- LAY-IN 24x48 LIGHT FIXTURE
- RECESSED CAN LIGHT FIXTURE
- HVAC SUPPLY DIFFUSER - SEE MECHANICAL
- HVAC RETURN DIFFUSER - SEE MECHANICAL
- EXHUAST FAN
- JUNCTION BOX - SEE ELECTRICAL
- 2'X2' ACOUSTICAL CEILING TILE AND GRID
- GYP | 9'-0" CEILING TYPE / CEILING HEIGHT
- GYP = GYPSUM BD., 5/8", PAINTED.
- EGAP = EXPOSED GRID ACOUSTIC PANEL

BOWMAN MURRAY HEMINGWAY
ARCHITECTS
514 Market Street
Wilmington, NC 28401
Tel - (910) 762-2621
Fax - (910) 762-8506

BOWMAN, MURRAY, HEMINGWAY, INCORPORATED REGISTERED ARCHITECTURE, ENGINEERING, INTERIORS NORTH CAROLINA WILMINGTON, N.C. CERT. NO. 50424

BRUCE F. BOWMAN REGISTERED ARCHITECT 5951 7.21.20

THE DAVIS COMMUNITY
Central Services Center

1011 Porter's Neck Road
Wilmington, North Carolina 28411

REV.	DATE	DESCRIPTION

NO.	DATE	ISSUE NOTE
	7-20-2020	PERMIT SET

Project Manager	Drawn By
David Ball	DB/DP
Date	Reviewed By
July 20, 2020	Bruce Bowman
Project ID	

Sheet Title

REFLECTED CEILING PLANS

Sheet No.

A900

1.0 CODES AND STANDARDS:

1.1 "2018 North Carolina State Building Code" and "International Building Code", 2015.

1.2 "Minimum Design Loads for Buildings and other Structures" SEI/ASCE 7-10.

1.3 "Building Code Requirements for Structural Concrete (ACI 318-14)" American Concrete Institute 2014.

1.4 "Manual of Standard Practice", Concrete Reinforcing Steel Institute, latest edition.

1.5 "Specification for Structural Steel Buildings (AISC 360-10)" American Institute of Steel Construction, 2011 – 14th Edition

1.6 "Structural Welding Code – Steel (AWS D1.1)" and "Structural Welding Code – Reinforcing Steel (AWS D1.4)", American Welding Society.

1.7 "National Design Specification for Wood Construction with 2015 NDS Supplement," ANSI/AWC NDS-2015.

2.0 DESIGN LOADS:
Project Located in: City of Wilmington, County of New Hanover, State of North Carolina.

2.1 Risk Category = II

2.2 Gravity Loads: (Reduced where allowed)

GRAVITY LOADS		
Location	Uniform (psf)	Concentrated (lbs) (Over 2.5"x2.5")
Roof Loads:		
Dead Load	BY PEMB	
Live Load	20	300
Floor Loads:		
Dead Load	35	
Floor Live Loads:		
Storage	125	

2.3 Drifting Snow Loads per N.C. Building Code.

Pg = 10 psf
I = 1.0
Ce = 0.9
Ct = 1.0

2.4 Wind Loads per N.C. State Building Codes, 2018 edition (IBC 2015) & ASCE 7-10 (3-second gust)

Main Wind Force Resisting System:
V 146 mph
Exposure Category "C"

Building is enclosed & Internal Pressure coefficient (GCpi) = +0.18 & -0.18
Topographic Factor Kzt = 1.0
Wind Directionality Factor, Kd = 0.85

Calculated Wind Base Shear (For MWFRS)
Vx = by Nucor Building Systems Vy = by Nucor Building Systems

Components and Cladding:
V 146 mph
Exposure Category "C"

Components and Cladding Wind Pressure (psf)									
Walls	Area < 10ft²		< 20ft²		Area < 50ft²		Area < 100ft²		Area < 500ft²	
Zone 4	51.2	-55.4	48.9	-53.2	45.8	-50.2	43.5	-47.8	38.1	-42.5
Zone 5	51.2	-68.4	48.9	-63.8	45.8	-57.7	43.5	-53.2	38.1	-42.5
Roof	Area < 10ft²		Area < 20ft²		Area < 50ft²		Area < 100ft²		Area < 500ft²	
Zone 1	29.4	-46.8	26.9	-45.5	23.4	-43.7	20.8	-42.5	20.8	-42.5
Zone 2	29.4	-81.5	26.9	-74.9	23.4	-66.3	20.8	-59.7	20.8	-59.7
Zone 3	29.4	-120.5	26.9	-112.7	23.4	-102.3	20.8	-94.4	20.8	-94.4

Notes:
1. Areas noted are effective wind areas as per ASCE 7-10, 26.2 definitions.
2. See figures below for Zone locations.
3. Plus and minus signs signify pressures acting toward and away from surfaces, respectively.
4. Design pressures shown in table are strength design wind pressures. Allowable stress design wind pressures may be calculated by factoring the pressures by 0.6.
5. Design pressures for effective wind areas between those noted in schedule may be interpolated.
6. Tributary area = greater of LxW or Lxl/3.
7. Deflections may be calculated based on 42% of these loads.

2.5 Seismic Loads per 2018 North Carolina State Building Code (IBC 2015) & ASCE 7-10

Risk Category = II
Site class = "D" (Per Geotechnical Report)
Spectral Response Coefficients:
SDS = 0.213g
SD1 = 0.138g

Seismic Design Category = C
Seismic Importance Factor = 1.0
Basic Seismic – Force – Resisting System

Building Frame System – by Nucor Building Systems
RX=RY=3.0, QX=QY=3.0, CDX=CDY=3.0
Cs = 0.071g
Design Base Shear Vx = Vy = by Nucor Building Systems
Building Height Limit = NL
Analysis Procedure – 12.8.1 ASCE 7-10
Equivalent Lateral Force Procedure

Bearing Wall System Mezzanine – Light frame walls with shear panels of gypsum board
RX=RY=2.0, QX=QY=2.5, CDX=CDY=2.0
Cs = 0.107g
Design Base Shear Vx = Vy = 12k
Building Height Limit = NL
Analysis Procedure – 12.8.1 ASCE 7-10
Equivalent Lateral Force Procedure

2.6 Guardrail designed per North Carolina State Building Code, Section 1607.8

Guardrail:
Uniform load = 50 plf, any direction – per 1607.8.1
Concentrated load = 200 lbs, any direction – per 1607.8.1.1
Intermediate Rail: (all those expect handrail) per 1607.8.1.2

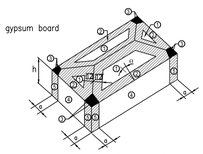

Hip Roof (7°< θ ≤27°)

a = 7ft "corner zone"

2.7 Flood Loads:
Project is not located in a flood zone.

3.0 FOUNDATIONS:

3.1 Foundation design is based on geotechnical report # 22:29144.A by ECS Southeast LLP Wilmington, NC dated June 9, 2020. This report is available for inspection at the office of the architect or owner. The recommendations contained in this report are herein made part of the requirements of these contract documents.

3.2 Footings shall bear on strata capable of sustaining a minimum bearing pressure of 3000 psf.

3.3 Top of footing (T/FTG) elevations are shown on the drawings or are to be determined by the Contractor in the field in accordance with the guidelines set forth in the drawings.

3.4 Bottom of exterior footings, grade beams and walls shall bear at a minimum depth of 1'-0" below final grade for frost protection.

3.5 Testing and Inspection:
a. All areas to have slabs on grade shall be proof rolled in accordance with and under observation of the Geotechnical Engineer and approved prior to preparation for concrete placement.
b. All foundation bearing strata shall be inspected and approved by the Geotechnical Engineer prior to any concrete placement.
c. Geotechnical Engineer shall be the sole judge as to suitability of all foundation and/or slab bearing strata.
d. Footing bearing elevations shall be adjusted in the field as required to meet the design bearing pressures by additional excavation or compaction and/or backfilling or by other means acceptable to the Geotechnical Engineer.

3.6 Undercutting to remove existing fill beneath footings and slab shall be performed at the direction of the Geotechnical Engineer.

3.7 Engineered Fill: All fill material shall be selected in accordance with the Geotechnical Report Material shall be a clean, low plastic soil with a plasticity index less than 30 (less than 15 is preferred), liquid limit less than 50, and unit weight of 120 pcf (+ 5 pcf)

3.8 Compaction: All fill shall be placed in loose lifts not exceeding 8 inches in thickness and compacted to a minimum of 96 percent Standard Proctor (ASTM D-698) except that the top 12 inches shall be compacted to a minimum of 98 percent Standard Proctor. Moisture shall be controlled to within 3 percent above or below optimum content.

3.9 Remove all topsoil and organic materials. The stripping should extend at least 10' beyond the proposed construction limits.

3.10 Contractor shall review all construction considerations as outlined in the Geotechnical report and bid accordingly.

4.0 CONCRETE:

4.1 Concrete Strength:
All concrete shall be in accordance with the American Concrete Institute (ACI) 301 and 318.

4.2 Concrete shall have a 28 day compressive strength and density as follows:
a. Footings and Interior Slab-on-grade.....3,000psi, Density = ±145pcf
b. Exterior Slab-on-grade.....4,000psi
c. CMU Grout Fill.....3,000psi pea gravel mix, Density = ±145pcf, Slump 8"-11" or grout per Structural Masonry Notes, this sheet.

4.3 Concrete Mix Designs:
d. Submittals: Submit written reports of each proposed concrete mix not less than 15 days prior to the start of work.
e. Mix designs, including water, cement ratios and slumps, shall be prepared in accordance with ACI 301-05, Section 4, Cement shall conform to ASTM C 150 Type 1 or at contractor's option, ASTM C 595 Type IP where fly ash is permitted. Normal weight aggregate shall conform to ASTM C 33 and light weight aggregate shall conform to ASTM C 330. No admixtures containing calcium chloride shall be permitted in any concrete.
f. Aggregate size shall be #67 stone for supported slabs or other formed concrete elements; #57 stone for slabs on grade and footings or other concrete elements formed from and poured against earth; #89 stone for masonry grout.
g. Water reducing admixture shall be used in all concrete.
h. Air entraining admixture in accordance with ACI 301 shall be used in all concrete exposed freezing and thawing during construction or service conditions.
i. Concrete subjected to freezing/thawing shall have a maximum water/cement ratio of 0.45 and shall contain the amount of air entraining agent specified in ACI 301-05 Section 4.

4.4 Curing:
See specifications for curing method options and apply within two (2) hours after completion of finishing to all concrete flatwork and walls, U.N.O., other than footings and grade beams.

4.5 Use a non-corrosive, non-chloride accelerating admixture in concrete exposed to temperatures below 40 degrees. Uniformly heat the water and aggregates to a temperature of not less than 50 degrees. Place and cure concrete in accordance with ACI 306.

4.6 When hot weather conditions exist, place and cure concrete in accordance with ACI 301. Cool ingredients before mixing to maintain concrete temp. at time of placement below 90 degrees.

4.7 Reinforcing in all abutting concrete, including footings shall be continuous through or around all corners or intersections. Dowels or splices shall be equal in size and spacing to the reinforcing in the abutting members.

4.8 Refer to architectural drawings for door and window openings, drips, reglets, washes, masonry anchors, brick ledge elevations, slab depressions and miscellaneous embedded plates, bolts, anchors, angles, etc.

4.9 Refer to plumbing, mechanical and electrical drawings for underfloor, perimeter and other drains and for sleeves, outlet boxes, conduit, anchors, etc. The various trades are responsible for their items.

4.10 Base plates, anchor rods, support angles and other steel exposed to earth or granular fill shall be covered with a minimum of 3" of concrete.

4.11 Fill slabs, not shown on the structural drawings, shall be reinforced with a minimum of 6 x 6 x W2.0 x W2.0 WWM unless noted otherwise on other drawings.

4.12 Finish surfaces to the following tolerances, according to ASTM E 1155, for a randomly trafficked floor surface:
a. Specified overall values of flatness, F(F) 25; and of levelness, F(L) 20; with minimum local values equal to ⅔ of the overall flatness and levelness values.
b. The composite F(F) and F(L) numbers shall be measured and reported within 72 hours after completion of slab concrete finishing operations and before removal of any supporting shores.

4.13 Non-shrink grout shall be pre-mixed, non-corrosive, non-metallic, non-staining containing silica sands, Portland cement, shrinkage compensating and water reducing agents. Product shall only require the addition of water. Minimum compressive strength shall be 2500 psi after one day and 7000 psi after 28 days. Grout shall be free of gas producing or air releasing and oxidizing agents and contain no corrosive iron, aluminum or gypsum.

4.14 Provide concrete grout – not mortar – for reinforced masonry lintel and bond beams where indicated on drawing or as scheduled.

4.15 Tolerance for anchor rods and other embedded items shall be per the AISC Code of Standard Practice Section 7.5.

4.16 Unless otherwise shown in the architectural drawings, provide 3/4-inch chamfers at all column, wall, slab or beam edges that are exposed to view in the finished structure.

4.17 Concrete cover for cast-in-place concrete reinforcement:
Concrete cast against & permanently exposed to earth:.....3 Inches
Concrete exposed to earth or weather:
No. 6 through No. 18 Bars:.....2 Inches
No. 5 Bar and smaller:.....1½" Inches
Concrete not exposed to weather or in contact with ground:
Slabs, Walls, Joists:
No. 11 Bar and smaller:.....¾" Inches
Beams, Columns:
Primary Reinforcement, Ties, Stirrups:.....1½" Inches

5.0 STRUCTURAL MASONRY:

5.1 All structural masonry shall conform to ACI 530 standards as appropriate to the material.

5.2 Concrete Masonry Units (CMU):
a. Units shall be lightweight cellular units conforming to ASTM C 90, Grade N-2. Concrete masonry net area unit strength shall be no less than 2,000psi in accordance with ASTM C 140, with a unit weight not exceeding 95 pcf.
b. Design compressive strength of CMU (fm) = 2,000psi.

5.3 Mortar shall conform to ASTM C 270. Mortar shall be type "S" and shall conform to the ASTM C270 proportion requirements.

5.4 Neither type "N" mortar nor masonry cement shall be used as part of the lateral force resisting system.

5.5 Grouting:
a. Grout shall conform to ASTM C476 as specified by proportion. Masonry grout shall conform to the ASTM proportion requirements for coarse grout with a slump of 8 to 11 inches. Contractor may substitute grout with pea gravel concrete masonry fill, see note 4.2 this sheet.
b. All bond beams shall be filled with grout and reinforced as indicated on the drawings (details or schedules). Mortar fill is not permitted.
c. All masonry wall cells or cavities indicated as reinforced shall be grouted for the full height of the wall, unless specifically noted otherwise on the drawings. Unreinforced walls indicated as grouted shall be grouted full height, unless specifically noted otherwise. Mortar fill is not permitted.
d. All masonry cells or cavities below grade shall be grouted solid unless specifically noted otherwise on the drawings. Mortar fill is not permitted.
e. Vertical grouting shall be low lift or high lift as follows:
(1) Low lift grouting shall be used for all cavity walls and may be used for all walls at the option of the Contractor. Lifts shall not exceed 4'-0" in height.
(2) High lift grouting is permissible only for filling of cellular masonry units and shall not exceed 12'-8" in height. Clean out holes shall be provided at the base of each grouted cell.
f. Grouting shall be stopped 1-1/2" below the top of a course to form a key at the joint.
g. Grouting of masonry beams or lintels shall be done in one continuous operation.
h. Consolidate pours with mechanical vibrator and reconsolidate by mechanical vibration after initial water loss and settlement has occured.
i. Mechanical vibrator shall be a low velocity vibrator with a ¾" head.

5.6 Masonry Reinforcing:
a. Foundation dowels may slope a maximum of 1:6 to align with wall cavities or vertical CMU cores. Greater slopes will require replacement of the foundation dowels.
b. Spliced reinforcing shall be lapped a length calculated per IBC 2107.5 OR 15" OR as shown on drawings, whichever is greatest. All splices shall be wired together.
c. Vertical reinforcing bars shall have a minimum clearance of ¼" from masonry and shall be held in position top and bottom and at intervals not exceeding 4'-0". Accessories for such support shall be used. Provide "AA Wire Products Company" (or approved equal) Rebar Positioner AA225 or AA239 for vertical bars and AA238 for horizontal bars or approved equal products from other suppliers.
d. Horizontal joint reinforcing shall be lapped no less than 6" all splices, including corners and tees where no control joint is used.
e. All horizontal joint reinforcing shall stop at control joints.
f. Horizontal reinforcing in bond beams shall be continuous through control joints.
g. All CMU walls shall have joint reinforcing @ 16"o.c. All joint reinforcing shall have (2) 9 gauge (0.148"ø or W1.7) side rods & cross rods @ 16"o.c.

5.7 Masonry contractor shall provide for and coordinate with other trades for placement of all items to be embedded or built into the masonry.

MINIMUM SPLICING LENGTH (L) FOR MASONRY	
BAR SIZE	SPLICE LENGTH
#3	16"
#4	22"
#5	26"
#6	43"
#7	60"

6.0 REINFORCING STEEL:

6.1 Reinforcing shall be domestic new billet steel conforming to ASTM A615, Grade 60 or 60S including stirrups and ties, except that reinforcing which is required to be welded shall conform to ASTM A706.

6.2 Field bending of concrete reinforcing steel is not permitted.

6.3 Welded wire mat and fabric shall conform to ASTM A184 and A185 respectively and shall be provided in flat sheets. Welded wire mat/fabric shall be lapped 0'-6" at all splices.

6.4 Bar Splices:

	f'c = 3,000psi		f'c = 4,000psi		f'c = 5,000psi	
Bar Size	Ld (in)	Class "B" Lap Splice (in)	Ld (in)	Class "B" Lap Splice (in)	Ld (in)	Class "B" Lap Splice (in)
#3	17	22	15	19	13	17
#4	22	29	19	25	17	23
#5	28	36	24	31	22	28
#6	33	43	29	37	26	34
#7	48	63	42	54	38	49
#8	55	72	48	62	43	56

1. Values are based on normal weight concrete.
2. Ld = minimum embed of rebar
3. Class "B" lap splice refers to minimum distance bars must be lapped for a full tension splice.

7.0 GENERAL WOOD FRAMING NOTES:

7.1 All sill and top plates shall be SYP #2 or better. Pressure treat all sill plates in contact with concrete or masonry.
All pressure treated 2x material shall be SYP #2 or better and shall be treated in accordance with AWPA Standard U1 to the requirements of Use Category 3B (UC3B) or Use Category 4A (UC4A).
All Laminated Veneer Lumber (LVL) shall be Louisiana Pacific, Gang-Lam 2950 F_b-2.0E or approved equal.

7.2 All floor trusses shall be Builders First Source or approved equal. Truss supplier shall construct trusses to provide full bearing on all walls and girders. The truss supplier shall also submit drawings for review prior to fabrications. The shop drawings shall show the following:
– Layout plan
– Bearing locations
– Truss elevations
– Mechanical openings
– Structural calculations
– North Carolina professional engineer seal to certify design

7.3 Floor deck/diaphragm
– Floor deck shall be 3/4-inch exterior grade tongue and groove Advantech or approved equal.
– Place long direction perpendicular to framing
– Stagger end joints
– Glue and nail panels down with 10d common

Provide the following nail pattern:
@ 6" O.C. @ panel edge
@ 12" O.C. @ interior of panel.

7.4 Wall Sheathing: See S2.01 and S4.01 for shear wall sheathing and nailing requirements

7.5 See plan for location of Shear Walls and detail sheets for framing requirements.

7.6 [X] number in box notes the required number of bundled studs in that location. Bundled studs shall rest on framing member below or provide solid blocking from sub-floor to plate or girder below. Good framing practices shall be used in all cases.

7.7 All strap and tie connections shall have z-max (g185) triple zinc coating (or hot-dipped galvanized). All nails shall be hot-dipped galvanized.

7.8 Do not bend coil straps.

7.9 Unless noted otherwise, connect all building components per table 2304.9.1 – fastening schedule, per IBC 2015.

8.0 LIGHT GAUGE STEEL FRAMING (DIETRICH):

8.1 All members shall be designed in accordance with the American Iron and Steel Institute (AISI) "Specifications for the Design of Cold-formed Steel Structural Members", Latest Edition.

8.2 All framing members shall be formed from corrosion-resistant steel corresponding to the requirements of ASTM A446, with a minimum yield strength of 33 ksi for joists and studs and 33 ksi for runners.

8.3 All members shown are standard designations of "Dietrich Industries, Inc."

8.4 Design of members indicated in structural drawings is based on minimum properties of products produced by "Dietrich Industries." No substitution of materials is acceptable for use without prior approval of the structural engineer. Substitutions shall meet or exceed all properties produced by "Dietrich Industries, Inc."

8.5 All shop drawing submittals shall show layout, spacing, sizes, thicknesses and types of cold-formed metal framing, fabrication, and fastening and anchorage details, including mechanical fasteners. Show reinforcing channels, opening framing, supplemental framing, strapping, bracing, bridging, splices, accessories, connection details and attachment to adjoining work.

8.6 Shop drawings, design calculations and other structural data shall be prepared and sealed by a qualified engineer. The Structural Engineer shall be legally qualified to practice in the jurisdiction where the project is located and shall be experienced in providing engineering services of the kind indicated.

8.7 All framing components shall be cut squarely for attachment to perpendicular members or as required for an angular fit tight against abutting members. All load bearing stud/walls shall be factory assembled into panels with studs bearing squarely and fully in top and bottom tracks.

8.8 Fastening components shall be by self-drilling screws or by welding as defined below UNO on the drawings.

8.9 Screwed connections:
a. Screws shall be type S-12 or type S-4 for all framing members per manufacturer's recommendations.
b. A minimum of three (3) exposed threads shall penetrate through at joined materials.
c. Corrosion-resistant cadmium-plated screws shall be used for screws attaching metal lath, masonry ties, and other exterior materials.

8.10 Welded connections:
a. Gas metal arc welding (GMAW) shall be used for 20 ga. Or lighter members. AWSE-705-3, E-705-E, E-705-6 wire electrodes .030"-.035" diameter shall be used with carbon dioxide, argon-oxygen or argon-carbon dioxide shielding. Welding equipment 60-100 amperes at 25 volts using 220-volt 3-phase electric service.
b. Shielded metal arc welding (SMAW) shall be used for 18 ga' and heavier members. AWS E-6012, E-6013, or E-7014 electrodes of 3/32" or 1/8" diameter shall be used. Welding equipment heat setting shall be varied dependent on material thickness.
c. All welds shall be touched up with zinc rich paint, or paint similar to that used by the framing member manufacturer.

8.11 Alignment of studs (plumbness) and walls (straightness) shall be within 1/960 of their respective heights and lengths.

8.12 Studs shall be plumbed, aligned, and securely attached to top and bottom runners. Splices in studs are not permitted.

8.13 Where manufacturer's recommendations for erection, attachment, assembly, bracing, alignment, or other installation, or assembly requirements are more stringent than indicated in these drawings, the manufacturer's recommendations shall apply.

STEEL THICKNESS						
Gauge:	Mils	Design Thickness		Minimum Thickness		Yield Strength
		Inches	mm	Inches	mm	ksi
20	33	0.0346	0.879	0.0329	0.836	33
18	43	0.0451	1.146	0.0428	1.087	33
16	54	0.0566	1.438	0.0538	1.367	50
14	68	0.0713	1.811	0.0677	1.720	50
12	97	0.1017	2.583	0.0966	2.454	50

9.0 POST-INSTALLED ANCHORS:

9.1 Except where indicated on the drawings, post-installed anchors shall consist of the following anchor types as provided by HILTI, Inc. Contact HILTI at (800) 879-8000 for product related questions.

Anchorage to Concrete
a. Adhesive anchors for cracked and uncracked concrete use:
1. HILTI HIT-HY 200 Safe Set System with HILTI HIT-Z Rod per ICC ESR-3187 (pending).
2. HILTI HIT-HY 200 Safe Set System with HILTI Hollow Drill Bit System with HAS-E threaded rod per ICC ESR-3187.
3. HILTI HIT-RE 500-SD Epoxy Adhesive Anchoring system with HAS-E threaded rod per ICC SR-2322 for slow cure applications.

b. Medium duty mechanical anchors for cracked and uncracked concrete use:
1. HILTI KWIK HUS EZ and KWIK HUS EZ-I Screw Anchors per ICC ESR-3027
2. HILTI KWIK BOLT-TZ Expansion Anchors per ICC ESR-1917
3. HILTI KWIK Bolt 3 Expansion Anchors (uncracked concrete only) per ICC ESR-2302

c. Heavy duty mechanical anchors for cracked and uncracked concrete use:
1. HILTI HDA Undercut Anchors per ICC ESR 1546
2. HILTI HSL-3 Expansion Anchors per ICC ESR 1545

Rebar Doweling into Concrete
a. Adhesive anchors for cracked and uncracked concrete use:
1. HILTI HIT-HY 200 Safe Set System with HILTI Hollow Drill Bit System with continuously deformed rebar per ICC ESR-3187.
2. HILTI HIT-RE 500-SD Epoxy Adhesive Anchoring System with continuously deformed rebar per ICC ESR-2322.

Anchorage to Solid Grouted Masonry
a. Adhesive Anchors use:
1. HILTI HIT-HY 70 Masonry Adhesive Anchoring System (ICC pending).
2. Steel anchor element shall be HILTI HAS-E continuously threaded rod or continuously deformed steel rebar.
b. Mechanical Anchors use:
1. HILTI KWIK BOLT-3 Expansion Anchors per ICC ESR 1385.

Anchorage to Hollow/Multi-wythe Masonry
a. Adhesive Anchors use:
1. HILTI HIT-HY 70 Masonry Adhesive Anchoring System per ICC ESR-3342.
2. Steel anchor element shall be HILTI HAS-E continuously threaded rod or continuously deformed steel rebar.
3. The appropriate size screen tube shall be used per adhesive manufacturer's recommendation.

9.2 Anchor capacity used in design shall be based on the technical data published by HILTI or such other method as approved by the Structural Engineer of record. Substitution requests for alternate products must be approved in writing by the Structural Engineer of record prior to use. Contractor shall provide calculations demonstrating that the substituted product is capable of achieving the performance values of the specified product. Substitutions will be evaluated by their having and ICC ESR showing compliance with the relevant building code for seismic uses, load resistance, installation category, and availability of comprehensive installation instructions. Adhesive anchor evaluation will also consider creep, in-service temperature and installation temperature.

9.3 Install anchors per the manufacturer instructions, as included in the anchor packaging.

9.4 Overhead adhesive anchors must be installed using the HILTI PROFI System.

9.5 The contractor shall arrange an anchor manufacturer's representative to provide onsite installation training for all of their anchoring products specified. The Structural Engineer of record must receive documented confirmation that all of the contractor's personnel who install anchors are trained prior to the commencement of installing anchors.

9.6 Anchor capacity is dependant upon spacing between adjacent anchors and proximity of anchors to edge of concrete. Install anchors in accordance with spacing and edge clearances indicated on the drawings.

9.7 Existing reinforcing bars in the concrete structure may conflict with specific anchor locations. Unless noted on the drawings that the bars can be cut, the contractor shall review the existing structural drawings and shall undertake to locate the position of the reinforcing bars at the locations of the concrete anchors, by HILTI FERROSCAN, GPR, X-ray, chipping or other means.

10.0 SHEAR WALL AND UPLIFT HOLDOWN SYSTEM:

10.1 See plans for shear wall locations and designations. See schedule on S4.01 for shear wall holdown requirements. See S4.01 for typical details.

11.0 PRE-ENGINEERED METAL BUILDING (PEMB):

11.1 Design the building system(s) in accordance with the building code.

11.2 Design the roof system(s) for the live loads or snow loads (whichever is greater) indicated and a collateral load of 7 psf in addition to the roof dead loads (including roof- and ceiling-mounted equipment), wind loads, and seismic loads. Parameters for the development of the snow, wind, and seismic loads are listed in the general notes. Include the effects of unbalanced snow load, snowdrift, sliding snow, rain-on-snow, and windward and leeward wind pressure and suction loads. Frames exposed to view shall be designed for an additional concentrated live load of 2,000 pounds located anywhere along the length of the frame. Roof purlins exposed to view shall be designed for an additional concentrated live load of 300 pounds located anywhere along the length of the purlin.

11.3 Load combinations shall be in accordance with the applicable building code unless the MBMA Metal Building Systems Manual load combinations are more stringent.

11.4 Design the building system(s) with hinged/pinned column bases. Fixed base columns are not allowed.

11.5 Building Lateral deflections/racking/drift limits shall be in accordance with "Serviceability Considerations" summary tables contained in AISC Steel Design Guide Series 3 "Serviceability Design Considerations for Low Rise Buildings" (1990). Frame drift shall be limited to H/120. Deflection limits shall not exceed deflection tolerances of equipment supported by the building.

11.6 Column bases shall be pinned bases without any moment transfer to the foundations.

11.7 Foundations shown supporting PEMB structures are for bidding purposes only; not for construction. PEMB manufacturer is responsible for the foundation design to support their structures. The foundations have been designed for the reactions shown. The reactions have not been reduced for dead plus wind load combinations. Redesign the foundations if the reactions for the building furnished exceed the indicated reactions by 10 percent. Calculations sealed by a Professional Engineer (Structural or Geotechnical) shall be submitted for review. Do not place foundations prior to the review and approval of the building system foundation loadings by the Structural Engineer of Record.

11.8 Pier and footing sizes and locations shown are based upon assumptions of the building system components, configurations, and loads. Coordinate all final details and dimensions to ensure that the foundation system is compatible with the building system(s) used.

11.9 Design and provide structural members for the support of HVAC units, ducts, fans, piping, electrical components, supported partitions, etc.

11.10 Design of the anchor rod diameters, projections, and embedment lengths are the responsibility of the PEMB manufacturer. Anchor rods are to be provided by the general contractor.

11.11 Submit final calculations sealed by the PEMB Structural Engineer. Final calculations shall include the combined maximum reaction for each column (i.e. the maximum reaction determined by the controlling load combination).

12.0 SUPPLEMENTAL FRAMING:

12.1 Provide supplemental framing for the support of pipes, conduits, light fixtures, etc. Supplemental framing shall consist of slotted steel channels, steel angles, hanger rods, and appropriate hardware. Finish for framing and hardware shall be galvanized or rust-inhibiting acrylic enamel paint.

12.2 Slotted Steel Channels: For exterior use, hot-dipped galvanized finish. For interior use, manufacturer's standard finish.

12.3 Steel Angles: for exterior use, hot-dipped galvanized. For interior use, prime with rust-inhibitive primer and finish paint two coats of alkyd enamel.

12.4 Hanger Rods: Galvanized carbon steel threaded rods.

12.5 Fastening Hardware: Finish shall match connected parts.

13.0 SHOP DRAWING SUBMITTAL:

13.1 Contractor shall submit Electronic copies (PDF format) of each shop drawing for review. Shop drawings shall be reviewed by the Contractor prior to submission to the Engineer. The Contractor shall allow 10 working days for shop drawing approval.

14.0 CONSTRUCTION AND SAFETY:

14.1 Woods Engineering P.A.'s responsibility is limited to the details and information shown on these drawings. It is the responsibility of the Contractor to provide adequate safety measures required by local codes as well as OSHA Standards for the Construction Industry. This should include, but not be limited to the following: Shoring to protect new as well as existing structures, Necessary Scaffolding, Material Handling Equipment, Trench Boxing.

15.0 STRUCTURAL INSPECTIONS:

15.1 Refer to Sheet S1.03 for all Structural Inspections requirements.

WOODS ENGINEERING
Consulting Structural Engineers
254 North Front Street Phone: 910.343.8007
Suite 201 Fax: 910.343.8088
Wilmington, NC 28401 www.woodseng.com

ABBREVIATIONS

@	AT
&	AND
AB	ANCHOR BOLTS
ACI	AMERICAN CONCRETE INSTITUTE
ADDL	ADDITIONAL
AFF	ABOVE FINISHED FLOOR
AISC	AMERICAN INSTITUTE OF STEEL CONSTRUCTION
AISI	AMERICAN IRON AND STEEL INSTITUTE
ALT	ALTERNATE
ARCH	ARCHITECTS – ARCHITECTURAL
ASTM	AMERICAN SOCIETY FOR TESTING AND MATERIALS
AWS	AMERICAN WELDING SOCIETY
B, BOTT	BOTTOM
BCX	BOTTOM CHORD EXTENSION
BFF	BELOW FINISHED FLOOR
BLDG	BUILDING
BM	BEAM
BOS	BOTTOM OF STEEL
BRG	BEARING
BTWN	BETWEEN
CFS	COLD FORMED STEEL
CJ	CONTRACTION JOINT
CL	CENTERLINE
CLR	CLEAR
CMU	CONCRETE MASONRY UNITS
COL	COLUMN
CONC	CONCRETE
CONN	CONNECTION
CONST JT	CONSTRUCTION JOINT
CONT	CONTINUOUS
CONTR	CONTRACTOR
CSJ	COMPOSITE STEEL JOIST
CTRD	CENTERED
DBA	DEFORMED BAR ANCHOR
DD	DELEGATED DESIGN
DEFL	DEFLECTION
DEPR	DEPRESSION – DEPRESSED
DET	DETAIL
DIAG	DIAGONAL
ø	DIAMETER
DIM	DIMENSION
DIST	DISTANCE
DWG(S)	DRAWING(S)
DWL(S)	DOWEL(S)
EA	EACH
ELEV	ELEVATION
EMBED	EMBEDDED – EMBEDMENT
ENG	ENGINEER
EOR	ENGINEER OF RECORD
EQ	EQUAL
EQUIP	EQUIPMENT
EF	EACH FACE
EJ	EXPANSION JOINT
EOD	EDGE OF DECK
EOM	EDGE OF MASONRY
EOS	EDGE OF SLAB
EOW	EDGE OF WALL
EW	EACH WAY
EXIST	EXISTING
EXP	EXPANSION
EXT	EXTERIOR
FDN	FOUNDATION
FFE	FINISHED FLOOR ELEVATION
FS	FAR SIDE
FTG	FOOTING
GA	GAUGE
GALV	GALVANIZED
GT	GIRDER TRUSS
HD	HEADED
HI	HIGH
HORIZ	HORIZONTAL
HSS	HOLLOW STRUCTURAL SECTION
HT	HIP TRUSS
IFM	INSIDE FACE OF MASONRY
INT	INTERIOR
JBE	JOIST BEARING ELEVATION
JT	JOINT
K	KIP-S
KB	KICKER BRACE
KSI	KIPS PER SQUARE INCH
(L)	LONG SIDE REINFORCEMENT
LB	LONG BAR
LBS	POUNDS
LLH	LONG LEG HORIZONTAL
LLV	LONG LEG VERTICAL
LO	LOW
LOC	LOCATION
LWC	LIGHT WEIGHT CONCRETE
MAX	MAXIMUM
MC	MOMENT CONNECTION
MECH	MECHANICAL
MFR	MANUFACTURER
MID	MIDDLE
MIN	MINIMUM
MISC	MISCELLANEOUS
MOW	MIDDLE OF WALL
MP	MASONRY PILASTER
d	NAILS – PENNY
No	NUMBER
NS	NEAR SIDE
NTS	NOT TO SCALE
NWC	NORMAL WEIGHT CONCRETE
OC	ON CENTER
OFB	OUTSIDE FACE OF BRICK
OFM	OUTSIDE FACE OF MASONRY
OFS	OUTSIDE FACE OF STUD
OPNG	OPENING
OPP	OPPOSITE HAND
PEBS	PRE-ENGINEERED BUILDING SUPPLIER
PED	PEDESTAL
PL	PLATE
PSF	POUNDS PER SQUARE FOOT
PSI	POUNDS PER SQUARE INCH
PSL	PARALLEL STRAND LUMBER
PLF	POUNDS PER LINEAR FOOT
PT	PRESSURE TREATED
REF	REFERENCE
REINF	REINFORCING
REQD	REQUIRED
(S)	SHORT SIDE REINFORCEMENT
SB	SHORT BAR
SCHD	SCHEDULE
SF	STEP FOOTING
SIM	SIMILAR
SOG	SLAB ON GRADE
SPEC(S)	SPECIFICATION(S)
SPF	SPRUCE PINE FUR
SQ	SQUARE
STD	STANDARD
STIFF	STIFFENER
STIRR	STIRRUP
STL	STEEL
STR	STRUCTURAL
SW	SHEAR WALL
SYP	SOUTHERN YELLOW PINE
T	TOP
TCX	TOP CHORD EXTENSION
TOC	TOP OF CONCRETE
TOS	TOP OF STEEL
TOW	TOP OF WALL
TYP	TYPICAL
UNO	UNLESS NOTED OTHERWISE
VB	VEHICLE BARRIER
VERT	VERTICAL
VIF	VERIFY IN FIELD
W	WITH
WWF	WELDED WIRE FABRIC

BOWMAN MURRAY HEMINGWAY
ARCHITECTS
514 Market Street
Wilmington, NC 28401
Tel - (910) 762-2621
Fax - (910) 762-8506

NORTH CAROLINA ENGINEERING CORPORATE SEAL No. C-1806 NORTH CAROLINA

NORTH CAROLINA PROFESSIONAL ENGINEER SEAL 041563 ADAM L. SISK

NORTH CAROLINA PROFESSIONAL ENGINEER SEAL 041563 ADAM L. SISK

Digitally signed by Adam L. Sisk, PE, SE
DN: E=adam@woodseng.com, CN="Adam L. Sisk, PE, SE", O="Woods Engineering, PA", L=Wilmington, S=North Carolina, C=US
Location: Wilmington, NC
Reason: I attest to the accuracy and integrity of this document
Contact Info: adam@woodseng.com, (910) 343-8007
Date: 2020.07.21 13:33:56-04'00'

THE DAVIS COMMUNITY
Central Services Center
1011 Porter's Neck Road
Wilmington, North Carolina 28411

REV.	DATE	DESCRIPTION
	7-20-2020	PERMIT SET

NO.	DATE	ISSUE NOTE

Project Manager	Drawn By
ALS	MBK
Date	**Reviewed By**
July 20, 2020	ALS

Project ID
20-3091

Sheet Title
General Notes

Sheet No.
S1.01

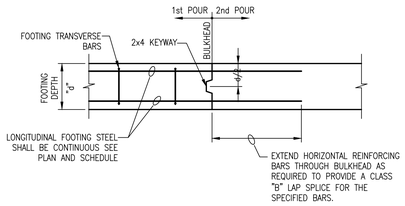

TYPICAL FOOTING CONSTRUCTION JOINT SECTION
SCALE: 3/4" = 1'-0"

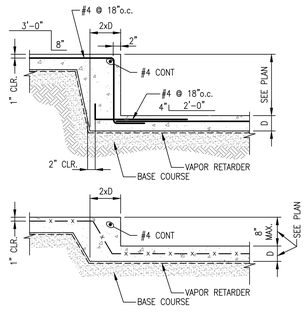

TYPICAL SLAB STEP
SCALE: 3/4" = 1'-0"

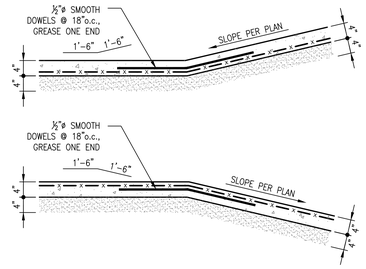

TYPICAL RAMP
AT SLAB ON GRADE
SCALE: 3/4" = 1'-0"

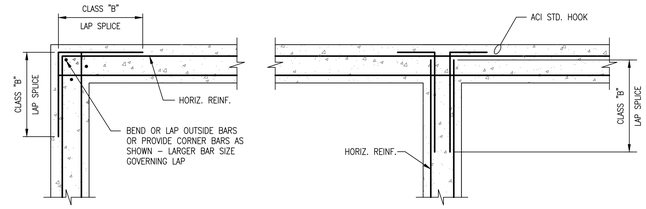

① WALL CORNERS

② WALL INTERSECTION

TYPICAL CORNER
REINFORCING FOR CONCRETE FOOTINGS
SCALE: 3/4" = 1'-0"

NOTE:
COORDINATE CONTROL JOINT LOCATION W/ARCHITECTURAL MAXIMUM SPACING OF 25' OR 3 TIMES THE WALL HT.

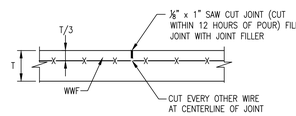

CONTRACTION JOINT DETAIL
NOT TO SCALE

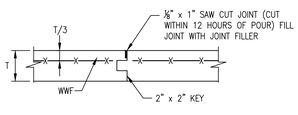

CONSTRUCTION JOINT DETAIL
NOT TO SCALE

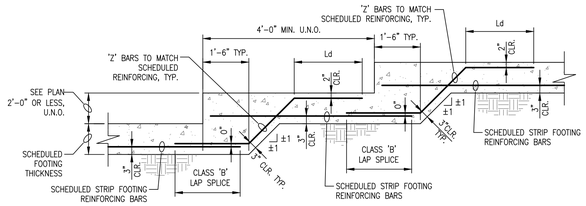

STEP FOOTING DETAIL
SCALE: 1/2" = 1'-0"

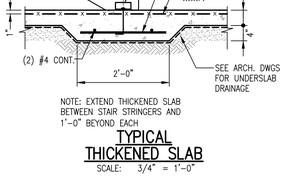

NOTE: EXTEND THICKENED SLAB BETWEEN STAIR STRINGERS AND 1'-0" BEYOND EACH

TYPICAL
THICKENED SLAB
SCALE: 3/4" = 1'-0"

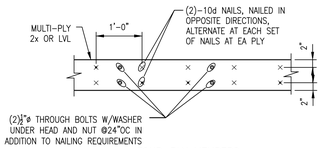

FOUR-PLY MEMBERS

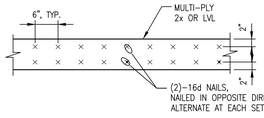

TWO-PLY AND THREE-PLY MEMBERS

TYPICAL NAILING PATTERN AT MULTI-PLY MEMBERS U.N.O.
SCALE: 3/4" = 1'-0"

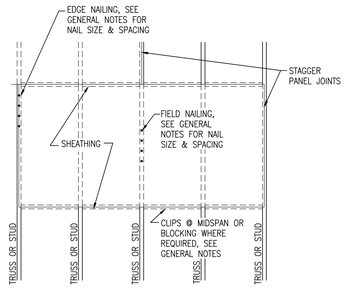

NAILING PATTERN FOR ROOF, FLOOR, OR WALL SHEATHING
SCALE: 1/2" = 1'-0"

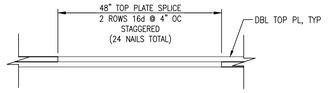

TYPICAL TOP PLATE SPLICE
SCALE: 1" = 1'-0"

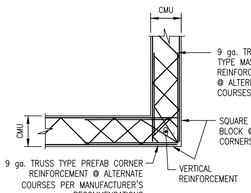

TYPICAL CMU CORNER

DETAIL "B"
SCALE: 3/4" = 1'-0"

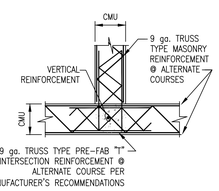

TYPICAL CMU INTERSECTION

DETAIL "C"
SCALE: 3/4" = 1'-0"

NOTE: TRUSS TYPE REINFORCEMENT SHOWN, HOWEVER LADDER OR TRUSS TYPES ARE ACCEPTABLE.

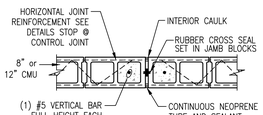

TYPICAL CONTROL JOINT

DETAIL "F"
SCALE: 3/4" = 1'-0"

NOTE:
COORDINATE CONTROL JOINT LOCATION W/ARCHITECTURAL MAXIMUM SPACING OF 25' OR 3 TIMES THE WALL HT.

GENERAL NOTE:
DETAILS SHOWN ON THIS SHEET ARE GENERIC IN NATURE AND MAY NOT PORTRAY EXACT CONDITIONS. THESE DETAILS ARE INTENDED TO PROVIDE GENERAL GUIDELINES FOR TYPICAL CONSTRUCTION CONDITIONS.

WOODS ENGINEERING
Consulting Structural Engineers
254 North Front Street
Suite 201
Wilmington, NC 28401
Phone: 910.343.8007
Fax: 910.343.8088
www.woodseng.com

BOWMAN MURRAY HEMINGWAY
ARCHITECTS
514 Market Street
Wilmington, NC 28401
Tel - (910) 762-2621
Fax - (910) 762-8506

WOODS ENGINEERING, P.A. CORPORATE SEAL No. C-1806 NORTH CAROLINA

NORTH CAROLINA PROFESSIONAL ENGINEER SEAL 041563 ADAM L. SISK

NORTH CAROLINA REGISTERED PROFESSIONAL ENGINEER SEAL 041563 ENGINEER ADAM L. SISK

Digitally signed by Adam L. Sisk, PE, SE
DN: E=adam@woodseng.com, CN="Adam L. Sisk, PE, SE", O="Woods Engineering, P.A", L=Wilmington, S=North Carolina, C=US
Location: Wilmington, NC
Reason: I attest to the accuracy and integrity of this document
Contact Info: adam@woodseng.com, (910) 343-8007
Date: 2020.07.21 13:54:11-04'00'

THE DAVIS COMMUNITY
Central Services Center

1011 Porter's Neck Road
Wilmington, North Carolina 28411

REV.	DATE	DESCRIPTION
	7-20-2020	PERMIT SET
NO.	DATE	ISSUE NOTE

Project Manager: ALS	Drawn By: MBK
Date: July 20, 2020	Reviewed By: ALS
Project ID: 20-3091	

Sheet Title: Typical Details

Sheet No.: S1.02

SCHEDULE FOR MATERIAL INSPECTIONS

BUILDING COMPONENTS OR MATERIAL	MATERIAL SUBMITTAL	INSPECTION / MONITORING	INSPECTION FREQUENCY	INSPECTOR QUALIFICATIONS	TEST REQUIREMENTS	TEST FREQUENCY	INSPECTION AGENCY
SOILS	1. REVIEW GEOTECHNICAL REPORT. 2. FILL MATERIAL SPECIFICATIONS. 3. VAPOR RETARDER	1. INSPECT SOILS PER ATTACHED 2015 IBC, TABLE 1705.6 FOR REQUIRED VERIFICATION AND INSPECTION. 2. INSPECT VAPOR BARRIER INSTALLATION. SEE PROJECT & MANUFACTURER SPECS.	1. ALL INSPECTIONS ARE PERIODIC EXCEPT FILL PLACEMENT AND COMPACTION WHICH IS CONTINUOUS.	1. QUALIFIED INSPECTION AGENCY A) INSPECTION AGENCY TO BE APPROVED BY SPECIAL INSPECTION COORDINATOR & BUILDING OFFICIAL.	1. PROVIDE VISUAL AND DCP TESTS PER ASTM STP-399 2. SUBGRADE DENSITY VERIFICATION	1. EACH ISOLATED FOOTING AND AT 20' INTERVALS FOR CONTINUOUS FOOTINGS. 2. AS REQUIRED TO VERIFY ENTIRE BUILDING PAD.	1. QUALIFIED INSPECTION AGENCY A) INSPECTION AGENCY TO BE APPROVED BY SPECIAL INSPECTION COORDINATOR & BUILDING OFFICIAL.
CONCRETE	1. SUBMIT CONCRETE MIX DESIGN. 2. SUBMIT MATERIAL CERTIFICATION 3. SUBMIT REBAR SHOP DRAWINGS.	1. INSPECT CONCRETE CONSTRUCTION PER ATTACHED 2015 IBC, TABLE 1705.3	1. AS OUTLINED PER TASK IN TABLE 1705.3	1. QUALIFIED INSPECTION AGENCY A) INSPECTION AGENCY TO BE APPROVED BY SPECIAL INSPECTION COORDINATOR & BUILDING OFFICIAL.	1. TEST CONCRETE FOR COMPRESSIVE STRENGTH, SLUMP, AIR CONTENT, TEMPERATURE AND BATCH TO PLACEMENT TIME.	1. SAMPLES FOR STRENGTH TESTS FOR EACH CLASS OF CONCRETE PLACED EACH DAY SHALL BE TAKEN NOT LESS THAN ONCE A DAY, NOR LESS THAN ONCE FOR EACH 150 YD^3 OF CONCRETE, NOR LESS THAN ONCE FOR EACH 5,000FT^2 OF SURFACE AREA FOR SLABS OR WALLS.	1. QUALIFIED INSPECTION AGENCY A) INSPECTION AGENCY TO BE APPROVED BY SPECIAL INSPECTION COORDINATOR & BUILDING OFFICIAL.
WOOD	1. SUBMIT MATERIAL CERTIFICATES. 2. SHEAR WALL HOLDOWN MATERIAL CERTIFICATES 3. SUBMIT SEALED FLOOR TRUSS SHOP DRAWINGS	1. INSPECT WOOD PLATES AND ROOF TRUSSES FOR GRADE AND SPACING PER APPROVED CONSTRUCTION DOCUMENTS. 2. INSPECT ROOF & BRACING LAYOUT, TYPE AND SPACING PER SHOP DRAWINGS. 3. VERIFY WOOD FRAMING INSTALLATION WITH APPROVED CONSTRUCTION DOCUMENTS. 4. INSPECT WOOD SHEAR WALL, FASTENING, BOLTING AND ANCHORING PER APPROVED CONSTRUCTION DOCUMENTS. 5. INSPECT ROOF DECK NAILING & VERIFY DECK TYPE. 6. INSPECT PARAPET STUDS AND CONNECTIONS PER APPROVED CONSTRUCTION DOCUMENTS.	1. PERIODIC.	1. QUALIFIED INSPECTION AGENCY A) INSPECTION AGENCY TO BE APPROVED BY SPECIAL INSPECTION COORDINATOR & BUILDING OFFICIAL.	1. VISUAL ONLY.	1. PERIODIC	1. QUALIFIED INSPECTION AGENCY A) INSPECTION AGENCY TO BE APPROVED BY SPECIAL INSPECTION COORDINATOR & BUILDING OFFICIAL.
COLD FORMED STEEL	1. SUBMIT SEALED WALL FRAMING SHOP DRAWINGS. 2. SUBMIT PRODUCT DATA SHEETS. 3. SUBMIT P.E. SEALED CALCULATIONS.	1. INSPECT ALL FIELD FABRICATED TRUSSES VS. APPROVED SHOP DRAWINGS. 2. INSPECT WALL FRAMING. 3. INSPECT MECHANICAL CONNECTIONS FROM TRUSS TO STEEL TUBE, STEEL TUBE TO WALL FRAMING AND ANCHORAGE OF WALL FRAMING TO CONCRETE.	1. & 2. CONTINUOUS 3. PERIODIC 4. PERIODIC	1. QUALIFIED INSPECTION AGENCY A) INSPECTION AGENCY TO BE APPROVED BY SPECIAL INSPECTION COORDINATOR & BUILDING OFFICIAL.	1. VISUAL INSPECTION BY A QUALIFIED INSPECTOR.	1. PERIODIC	1. QUALIFIED INSPECTION AGENCY A) INSPECTION AGENCY TO BE APPROVED BY SPECIAL INSPECTION COORDINATOR & BUILDING OFFICIAL.
ROOF CLADDING	1. NONE	1. VISUAL AND AS REQUIRED TO CERTIFY ROOF ATTACHMENT PER MANUFACTURER GUIDELINES.	1. PERIODIC.	1. QUALIFIED INSPECTION AGENCY A) INSPECTION AGENCY TO BE APPROVED BY SPECIAL INSPECTION COORDINATOR & BUILDING OFFICIAL.	1. PER MANUFACTURER AND 2015 IBC CODE FOR A WIND SPEED OF 130 MPH.	1. PERIODIC	1. QUALIFIED INSPECTION AGENCY A) INSPECTION AGENCY TO BE APPROVED BY SPECIAL INSPECTION COORDINATOR & BUILDING OFFICIAL.
MASONRY	1. SUBMIT MATERIAL CERTIFICATIONS.	INSPECT MASONRY PER ATTACHED ACI 530-13, TABLE 1.19.2. LEVEL B REQUIRED VERIFICATION AND INSPECTION OF MASONRY CONSTRUCTION.	AS OUTLINED PER TASK IN TABLE BELOW.	1. QUALIFIED INSPECTION AGENCY A) INSPECTION AGENCY TO BE APPROVED BY SPECIAL INSPECTION COORDINATOR & BUILDING OFFICIAL.	1. TEST GROUT (PEA GRAVEL CONCRETE) FOR SLUMP & COMPRESSIVE STRENGTH.	1. SAMPLES FOR STRENGTH TESTS FOR EACH CLASS OF CONCRETE PLACED EACH DAY SHALL BE TAKEN NOT LESS THAN ONCE A DAY, NOR LESS THAN ONCE FOR EACH 150 YD^3 OF CONCRETE, NOR LESS THAN ONCE FOR EACH 5,000FT^2 OF SURFACE AREA FOR SLABS OR WALLS.	1. QUALIFIED INSPECTION AGENCY A) INSPECTION AGENCY TO BE APPROVED BY SPECIAL INSPECTION COORDINATOR & BUILDING OFFICIAL.

REQUIRED VERIFICATION & INSPECTION OF SOILS

VERIFICATION & INSPECTION TASK	CONTINUOUS	PERIODIC
1. VERIFY MATERIALS BELOW FOOTINGS ARE ADEQUATE TO ACHIEVE THE DESIGN BEARING CAPACITY.	–	X
2. VERIFY EXCAVATIONS ARE EXTENDED TO PROPER DEPTH AND HAVE REACHED PROPER MATERIAL.	–	X
3. PERFORM CLASSIFICATION AND TESTING OF CONTROLLED FILL MATERIALS.	–	X
4. VERIFY USE OF PROPER MATERIALS, DENSITIES AND LIFT THICKNESS DURING PLACEMENT AND COMPACTION OF CONTROLLED FILL.	X	–
5. PRIOR TO PLACEMENT OF COMPACTED FILL, OBSERVE SUBGRADE AND VERIFY THAT SITE HAS BEEN PREPARED PROPERLY,	–	X

NOTE: SEE IBC-2015, TABLE 1705.6, CHAPTER 17

REQUIRED VERIFICATION & INSPECTION OF CONCRETE CONSTRUCTION FREQUENCY CHART

VERIFICATION & INSPECTION TASK	CONTINUOUS	PERIODIC
1. INSPECTION OF REINFORCING STEEL INCLUDING PRESTRESSING TENDONS, AND VERIFY PLACEMENT	–	X
2. REINFORCING BAR WELDING: a. VERIFY WEDABILITY OF REINFORCING BARS OTHER THAN ASTM A 706 b. INSPECT SINGLE-PASS FILLET WELDS, MAXIMUM $\frac{5}{16}$"; and c. INSPECT ALL OTHER WELDS.	– X	X X
3. INSPECTION OF ANCHORS CAST IN CONCRETE	–	X
4. INSPECT ANCHORS POST-INSTALLED IN HARDENED CONCRETE MEMBERS a. ADHESIVE ANCHORS INSTALLED HORIZONTALLY OR UPWARDLY INCLUDED ORIENTATIONS TO RESIST SUSTAINED TENSION LOADS. b. MECHANICAL ANCHORS AND ADHESIVE ANCHORS NOT DEFINED IN 4.a	X	 X
5. VERIFY USE OF REQUIRED DESIGN MIX.	–	X
6. PRIOR TO CONCRETE PLACEMENT, FABRICATE SPECIMENS FOR STRENGTH TESTS, PERFORM SLUMP AND AIR CONTENT TESTS, AND DETERMINE THE TEMPERATURE OF THE CONCRETE.	X	–
7. INSPECTION OF CONCRETE AND SHOTCRETE PLACEMENT FOR PROPER APPLICATION TECHNIQUES.	X	–
8. VERIFY MAINTENANCE OF SPECIFIED CURING TEMPERATURE AND TECHNIQUES.	–	X
9. INSPECTION OF PRESTRESSED CONCRETE: a. APPLICATION OF PRESTRESSING FORCES. b. GROUTING OF BONDED PRESTRESSING TENDONS	X X	– –
10. INSPECT ERECTION OF PRECAST CONCRETE MEMBERS.	–	X
11. VERIFY IN-SITU CONCRETE STRENGTH, PRIOR TO STRESSING OF TENDONS IN POST-TENSIONED CONCRETE AND PRIOR TO REMOVAL OF SHORES AND FORMS FROM BEAMS AND STRUCTURAL SLABS.	–	X
12. INSPECT FORMWORK FOR SHAPE, LOCATION AND DIMENSIONS OF THE CONCRETE MEMBER BEING FORMED.	–	X

NOTE: SEE IBC 2015, TABLE 1705.3 FOR REFERENCE STANDARDS.

REQUIRED LEVEL B VERIFICATION & INSPECTION OF MASONRY CONSTRUCTION FREQUENCY CHART

VERIFICATION & INSPECTION TASK	CONTINUOUS	PERIODIC
1. COMPLIANCE WITH REQUIRED INSPECTION PROVISIONS OF THE CONSTRUCTION DOCUMENTS AND THE APPROVED SUBMITTALS SHALL BE VERIFIED.	–	x
2. VERIFICATION OF f'_m AND f'_{MC} PRIOR TO CONSTRUCTION EXCEPT WHERE SPECIFICALLY EXEMPTED BY THIS CODE.	–	X
3. VERIFICATION OF SLUMP FLOW AND VSI AS DELIVERED TO THE SITE FOR SELF-CONSOLIDATING GROUT.	X	–
4. AS MASONRY CONSTRUCTION BEGINS, THE FOLLOWING SHALL BE VERIFIED TO ENSURE COMPLIANCE:		
a. PROPORTIONS OF SITE-PREPARED MORTAR.	–	X
b. CONSTRUCTION OF MORTAR JOINTS.	–	X
c. LOCATION OF REINFORCEMENT, CONNECTORS, PRESTRESSING TENDONS AND ANCHORAGES.	–	X
d. PRESTRESSING TECHNIQUE.	–	X
e. GRADE AND SIZE OF PRESTRESSING TENDONS AND ANCHORAGES.	–	X
5. DURING CONSTRUCTION THE INSPECTION PROGRAM SHALL VERIFY:		
a. SIZE AND LOCATION OF STRUCTURAL ELEMENTS.	–	X
b. TYPE, SIZE AND LOCATION OF ANCHORS, INCLUDING OTHER DETAILS OF ANCHORAGE OF MASONRY TO STRUCTURAL MEMBERS, FRAMES OR OTHER CONSTRUCTION.	–	X
c. SPECIFIED SIZE, GRADE AND TYPE OF REINFORCEMENT, ANCHOR BOLTS, PRESTRESSING TENDONS AND ANCHORAGES.	–	X
d. WELDING OF REINFORCING BARS.	X	–
e. PREPARATION, CONSTRUCTION AND PROTECTION OF MASONRY DURING COLD WEATHER (TEMPERATURE BELOW 40°F) OR HOT WEATHER (TEMPERATURE ABOVE 90°F).	–	X
f. APPLICATION AND MEASUREMENT OF PRESTRESSING FORCE.	X	–
6. PRIOR TO GROUTING, THE FOLLOWING SHALL BE VERIFIED TO ENSURE COMPLIANCE:		
a. GROUT SPACE IS CLEAN.	–	X
b. PLACEMENT OF REINFORCEMENT AND CONNECTORS, AND PRESTRESSING TENDONS AND ANCHORAGES.	–	X
c. PROPORTIONS OF SITE-PREPARED GROUT AND PRESTRESSING GROUT FOR BONDED TENDONS.	–	X
d. CONSTRUCTION OF MORTAR JOINTS.	–	X
7. GROUT PLACEMENT SHALL BE VERIFIED TO ENSURE COMPLIANCE:	X	–
a. GROUTING OF PRESTRESSING BONDED TENDONS.	X	–
8. PREPARATION OF ANY REQUIRED GROUT SPECIMENS, MORTAR SPECIMENS AND/OR PRISMS SHALL BE OBSERVED.	–	X

NOTE: SEE IBC 2015, SECTION 1705.4 FOR REFERENCE STANDARDS.

(a) FREQUENCY REFERS TO THE FREQUENCY OF INSPECTION, WHICH MAY BE CONTINUOUS DURING THE TASK LISTED OF PERIODICALLY DURING THE LISTED TASK, AS DEFINED IN THE TABLE
(b) REQUIRED FOR THE FIRST 5000 FT^2 OF AAC MASONRY
(c) REQUIRED AFTER THE FIRST 5000 FT^2 OF AAC MASONRY
(d) SEE TABLE 1.19.2 OF TMS 402/ACI 530/ASCE 5-13 FOR REFERENCE STANDARDS

WOODS ENGINEERING
Consulting Structural Engineers
254 North Front Street Phone: 910.343.8007
Suite 201 Fax: 910.343.8088
Wilmington, NC 28401 www.woodseng.com

BOWMAN MURRAY HEMINGWAY
ARCHITECTS
514 Market Street
Wilmington, NC 28401
Tel - (910) 762-2621
Fax - (910) 762-8506

NORTH CAROLINA PROFESSIONAL ENGINEER SEAL CORPORATE SEAL No. C-1806 NORTH CAROLINA

NORTH CAROLINA PROFESSIONAL ENGINEER SEAL 041563 REGISTERED ADAM L. SISK

Digitally signed by Adam L. Sisk, PE, SE
DN: E=adam@woodseng.com, CN=Adam L. Sisk, PE, SE*, O="Woods Engineering, PA", L=Wilmington, S=North Carolina, C=US
Location: Wilmington, NC
Reason: I am the author of this document
Contact Info: adam@woodseng.com; (910) 343-8007
Date: 2020.07.21 13:54:22-04'00'

NORTH CAROLINA PROFESSIONAL ENGINEER SEAL 041563 REGISTERED ADAM L. SISK

THE DAVIS COMMUNITY
Central Services Center
1011 Porter's Neck Road
Wilmington, North Carolina 28411

REV.	DATE	DESCRIPTION
	7-20-2020	PERMIT SET

NO.	DATE	ISSUE NOTE

Project Manager: ALS	Drawn By: MBK
Date: July 20, 2020	Reviewed By: ALS
Project ID: 20-3091	

Sheet Title: Structural Inspections

Sheet No.: S1.03

FLOOR FRAMING LEGEND

- LBW — INDICATES LOAD BEARING WALL WITH 600S162-43 STUDS @16"o.c.
- 18" FLOOR TRUSSES @ 24" o.c.
- PX — PRE-ENGINEERED METAL BUILDING STEEL COLUMN – SEE PEMB BASE PLATE INFO AND S301 FOR ANCHOR BOLT INFO
- Bx — WOOD BEAM, SEE PLAN FOR SIZE AND LOCATION
- SW-x — ½" GYPSUM BOARD SHEAR WALL @ SW-1 AND 7/16" OSB SHEATHING @ SW-2 SEE DETAILS ON S4.01
- INDICATES LOCATION OF S/HTT5 SHEAR WALL HOLDOWN – SEE S4.01
- H1 — INDICATES CFS HEADER SEE S4.01 FOR DETAILS
- INDICATES 8" CMU WALL – SEE S3.01

FOUNDATION LEGEND:

- FX — SPREAD FOOTING DESIGNATION SEE SCHEDULE THIS SHEET
- SF-X — STRIP FOOTING DESIGNATION SEE SCHEDULE THIS SHEET
- CJ — INDICATES CONCRETE SLAB CONTRACTION JOINTS, SEE S1.02 FOR TYPICAL DETAILS.
- PX — PRE-ENGINEERED METAL BUILDING STEEL COLUMN – SEE PEMB BASE PLATE INFO AND S3.01 FOR ANCHOR BOLT INFO
- P.F.X — INDICATES CONCRETE PIER – SEE S3.01
- SW-x — ½" GYPSUM BOARD SHEAR WALL @ SW-1 AND 7/16" OSB SHEATHING @SW-2 SEE DETAILS ON S4.01
- INDICATES LOCATION OF S/HTT5 SHEAR WALL HOLDOWN – SEE S4.01
- INDICATES STEEL X-BRACE LOCATIONS, AS PER PEMB PLANS
- INDICATES 8" CMU WALL – SEE S3.01

FOUNDATION NOTES:

1. SEE SHEET S1.01 FOR ADDITIONAL GENERAL NOTES, FOUNDATION NOTES, CONCRETE NOTES, AND REINFORCING STEEL NOTES. ALSO, SEE SHEET S1.02 FOR TYPICAL DETAILS. TYPICAL DETAILS ARE GENERALLY NOT SHOWN ON PLAN BUT RATHER ARE INTENDED TO DEFINE TYPICAL CONSTRUCTION CONDITIONS.
2. DATUM ELEVATION = TOP OF SLAB ELEVATION = ASSUMED 0'-0". OTHER ELEVATIONS ARE NOTED AS (+ OR –) FROM DATUM ELEVATION.
3. SLAB-ON-GRADE SHALL BE 4" THICK (SEE PLAN) 3000 psi CONCRETE WITH WWM 6x6xW2.0xW2.0 ON SUPPORT CHAIRS ON 15 mil VAPOR BARRIER, ON 6" COMPACTED SELECT GRANULAR MATERIAL ON WELL COMPACTED SUB GRADE. SEE S1.01 FOUNDATION NOTES FOR COMPACTION REQUIREMENTS, VERIFY COMPACTION w/QUALIFIED GEOTECHNICAL ENGINEER.
4. RELOCATE ANY UTILITY LINES THAT CONFLICT WITH THE FOUNDATIONS OR DROP THE FOUNDATIONS TO AN ELEVATION BELOW THE PROPOSED UTILITIES. RELOCATE ANY GRAVITY FLOW LINES THAT CONFLICT WITH SPREAD FOOTINGS AS SHOWN ON STRUCTURAL FOUNDATION PLANS. IF A GRAVITY FLOW LINE TRAVELS UNDER A CONTINUOUS STRIP FOOTING EITHER:
   a. DROP THE FOOTING ELEVATION BELOW THE PROPOSED LINE
   b. ENCASE THE LINE IN A STEEL PIPE 2" LARGER IN DIAMETER THAN THE LINE AND EXTEND THE PIPE 1'-0" PAST EACH SIDE OF THE CONCRETE FOOTING. BACKFILL THE TRENCH WITH #57 STONE. THE BEARING CAPACITY OF THIS AREA MUST MEET OR EXCEED THE ALLOWABLE SOIL BEARING CAPACITY.
5. REFER TO ARCHITECTURAL, MECHANICAL, ELECTRICAL, PLUMBING, AND OTHER DISCIPLINE DRAWINGS FOR OPENINGS AND DEPRESSIONS NOT SHOWN ON THESE DRAWINGS.
6. G.C. TO COORDINATE STEPS IN FOUNDATION FOR PLUMBING, ELECTRICAL, AND MECHANICAL.
7. PROVIDE STEEL SLEEVE FOR PLUMBING LINES UNDER FOUNDATIONS. SLEEVE SHALL BE 2" LARGER IN DIAMETER THAN PLUMBING LINE AT THAT LOCATION.
8. DIMENSIONS ARE FROM EDGE OF SLAB (E.O.S.) TO COLUMN CENTERLINE UNLESS NOTED OTHERWISE.
9. WHEN A SECTION IS CUT OR A DETAIL IS LABELED FOR A PARTICULAR CONDITION, THAT SECTION OR DETAIL SHALL APPLY FOR ALL SIMILAR CONDITIONS REGARDLESS OF WHETHER CUT OR LABELED, U.N.O.

#5 HAIRPIN BAR TYP.,U.N.O.

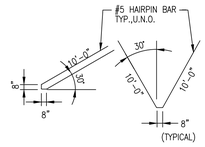

(TYPICAL)

STRIP FOOTING (SF-X) SCHEDULE

MARK	SIZE width x thickness x length	REINFORCEMENT	REMARKS
SF-1	1'-0" x 2'-0" x CONT.	(2) #4 CONT. BOTTOM	MONOLITHIC W/ SLAB
SF-2	2'-0" x 1'-0" x CONT.	(3) #4 CONT. BOTTOM	MONOLITHIC W/ SLAB
SF-3	3'-0" x 1'-2" x CONT.	(3) #5 BOTTOM	

SPREAD FOOTING (FX) SCHEDULE

MARK	SIZE length x width x thickness	TOP BARS	BOTTOM BARS	REMARKS
F3	3'-0" x 3'-0" x 2'-0"	(3) #5 E.W.	(3) #5 E.W.	MONOLITHIC W/ SLAB
F3A	3'-0" x 3'-0" x 1'-0"		(3) #5 E.W.	MONOLITHIC W/ SLAB
F3B	3'-0" x 3'-0" x 1'-0"		(3) #5 E.W.	MONOLITHIC W/ STRIP FOOTING
F4	4'-0" x 4'-0" x 2'-0"	(4) #5 E.W.	(4) #5 E.W.	MONOLITHIC W/ SLAB
F4A	4'-0" x 4'-0" x 1'-0"		(4) #5 E.W.	MONOLITHIC W/ STRIP FOOTING
F9.5x6	9'-6" x 6'-0" x 2'-0"	(7) #5 LONG (11) #5 SHORT	(7) #5 LONG (11) #5 SHORT	MONOLITHIC W/ SLAB
F7.5x4	7'-6" x 4'-0" x 2'-0"	(5) #5 LONG (9) #5 SHORT	(5) #5 LONG (9) #5 SHORT	MONOLITHIC W/ SLAB

FOUNDATION DESIGN IS BASED ON PRELIMINARY REACTIONS PROVIDED BY NUCOR. SUBMIT FINAL SEALED REACTIONS TO EOR FOR REVIEW PRIOR TO CONSTRUCTION.

FLOOR FRAMING PLAN NOTES:

1. FOR GENERAL FRAMING INFORMATION, SEE SHEET S1.01
2. HEADERS, BEAMS, SHEAR WALLS AND LOAD BEARING WALLS SHOWN ARE FOR FRAMING BELOW THIS LEVEL.
3. SUBFLOOR SHALL BE ¾" TONGUE AND GROOVE O.S.B. SPAN AS NOTED ON PLAN.
4. TOP OF SUBFLOOR =+11'-0" ABOVE DATUM
5. WHEN A SECTION IS CUT OR A DETAIL IS LABELED FOR A PARTICULAR CONDITION, THAT SECTION OR DETAIL SHALL APPLY FOR ALL SIMILAR CONDITIONS REGARDLESS OF WHETHER CUT OR LABELED, U.N.O.

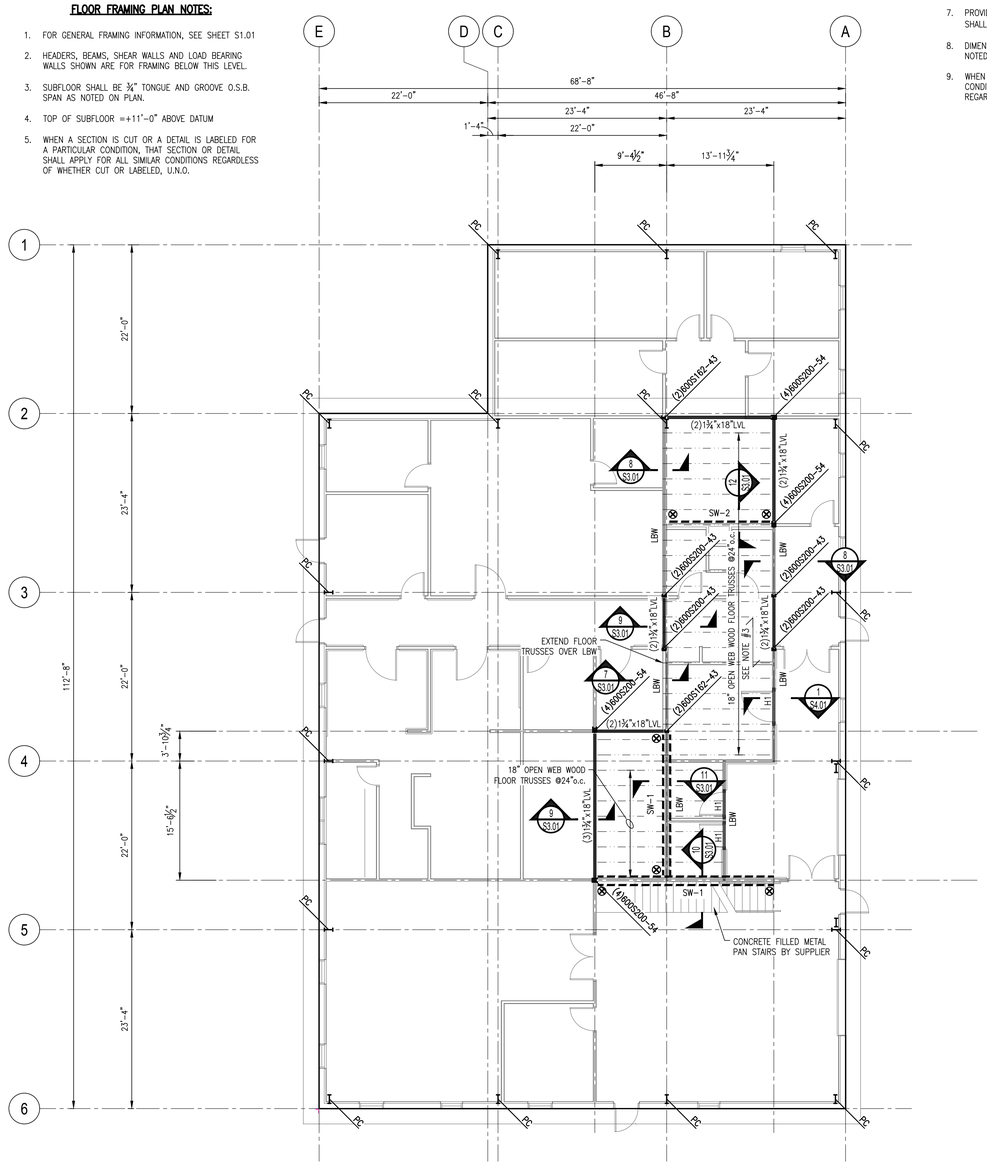

MEZZANINE FRAMING PLAN
SCALE: 1/8" = 1'-0"

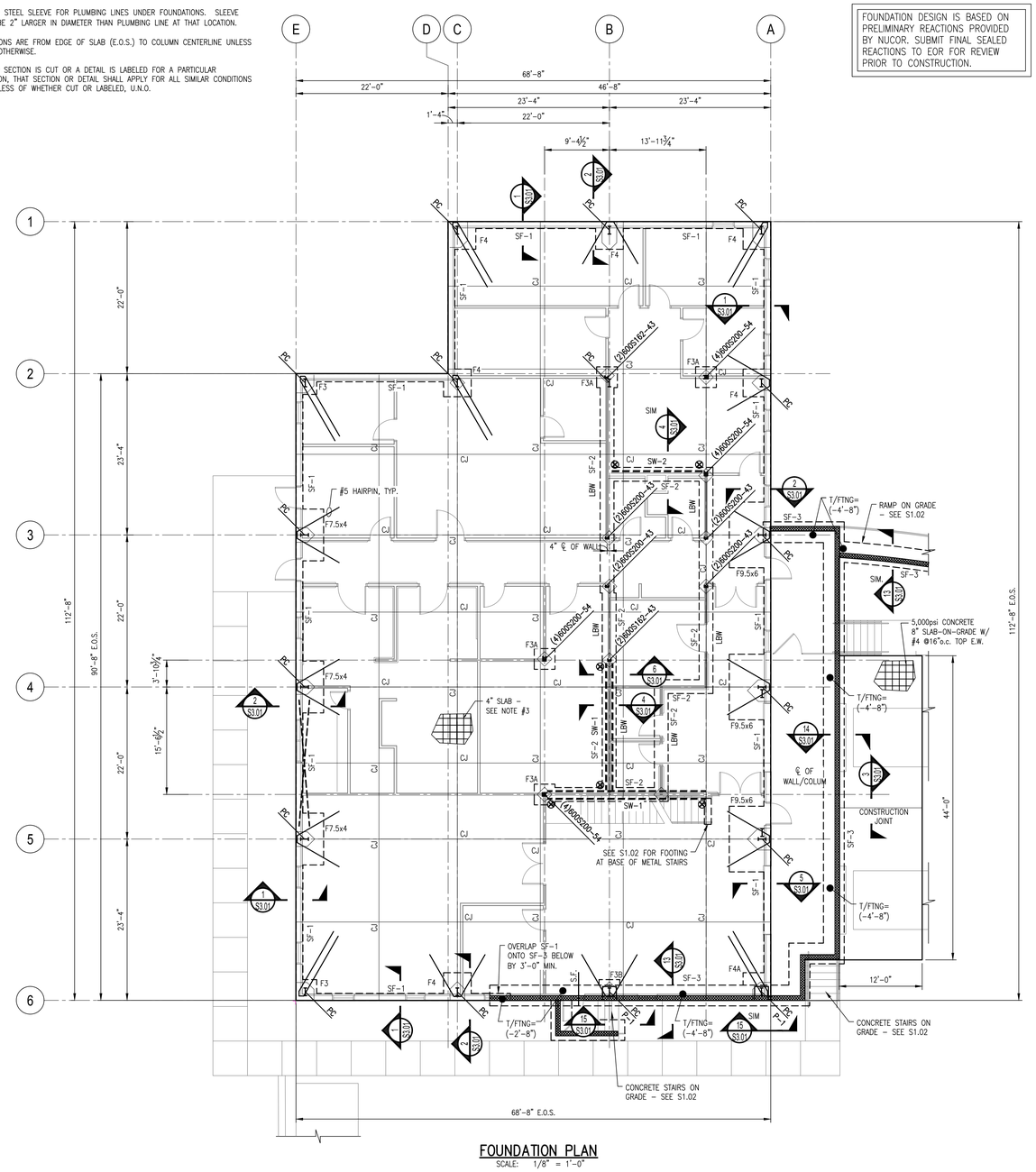

FOUNDATION PLAN
SCALE: 1/8" = 1'-0"

WOODS ENGINEERING
Consulting Structural Engineers
254 North Front Street Phone: 910.343.8007
Suite 201 Fax: 910.343.8088
Wilmington, NC 28401 www.woodseng.com

BOWMAN MURRAY HEMINGWAY
ARCHITECTS
514 Market Street
Wilmington, NC 28401
Tel - (910) 762-2621
Fax - (910) 762-8506

NORTH CAROLINA PROFESSIONAL ENGINEERING CORPORATE SEAL No. C-1806 NORTH CAROLINA

NORTH CAROLINA PROFESSIONAL ENGINEER SEAL 041563 ADAM L. SISK

NORTH CAROLINA PROFESSIONAL ENGINEER SEAL 041563 ADAM L. SISK

Digitally signed by Adam L. Sisk, PE, SE
DN: E=adam@woodseng.com, CN="Adam L. Sisk, PE, SE", O="Woods Engineering, PA", L=Wilmington, S=North Carolina, C=US
Location: Wilmington, NC
Reason: I attest to the accuracy and integrity of this document
Contact Info: adam@woodseng.com; (910) 343-8007
Date: 2020.07.21 13:54:29-04'00'

THE DAVIS COMMUNITY
Central Services Center

1011 Porter's Neck Road
Wilmington, North Carolina 28411

REV.	DATE	DESCRIPTION
	7-20-2020	PERMIT SET
NO.	DATE	ISSUE NOTE

Project Manager: ALS	Drawn By: MBK
Date: July 20, 2020	Reviewed By: ALS
Project ID: 20-3091	

Sheet Title
PEMB Foundation and Mezzanine Framing plan

Sheet No.
S2.01

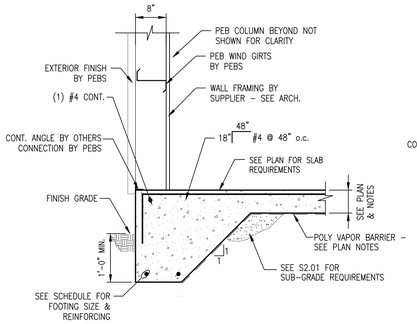

SECTION 1–1
SCALE: 3/4" = 1'-0"

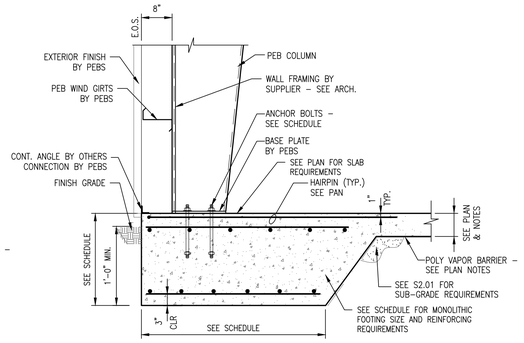

SECTION 2–2
SCALE: 3/4" = 1'-0"

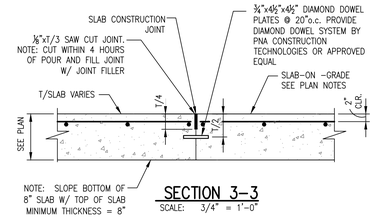

SECTION 3–3
SCALE: 3/4" = 1'-0"

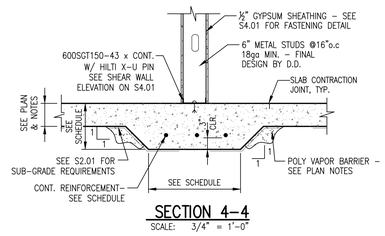

SECTION 4–4
SCALE: 3/4" = 1'-0"

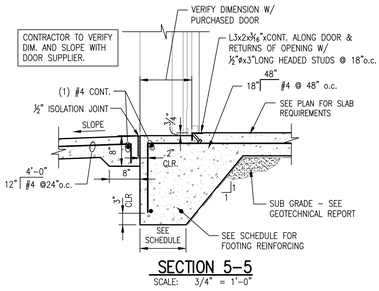

SECTION 5–5
SCALE: 3/4" = 1'-0"

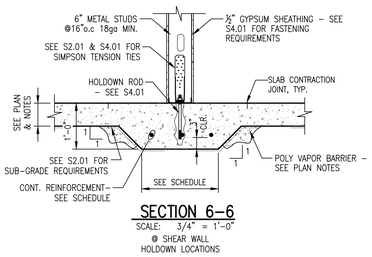

SECTION 6–6
SCALE: 3/4" = 1'-0"
@ SHEAR WALL HOLDOWN LOCATIONS

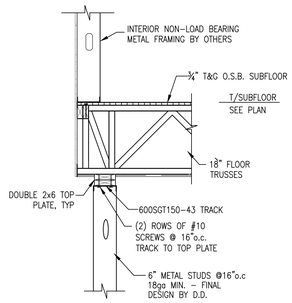

SECTION 7–7
SCALE: 3/4" = 1'-0"

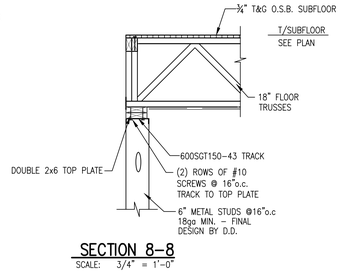

SECTION 8–8
SCALE: 3/4" = 1'-0"

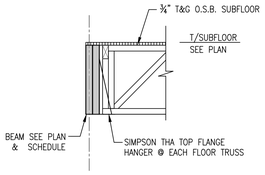

SECTION 9–9
SCALE: 3/4" = 1'-0"

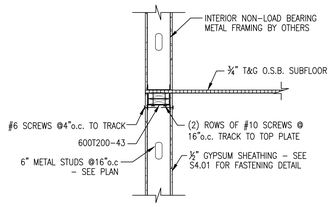

SECTION 10–10
SCALE: 3/4" = 1'-0"

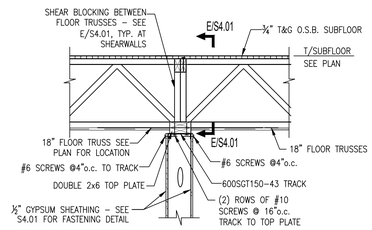

SECTION 11–11
SCALE: 3/4" = 1'-0"

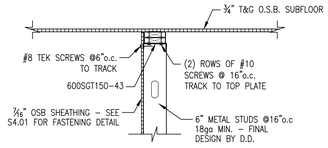

SECTION 12–12
SCALE: 3/4" = 1'-0"

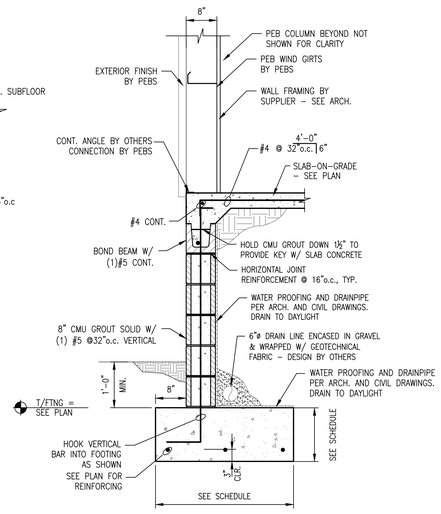

SECTION 13–13
SCALE: 3/4" = 1'-0"

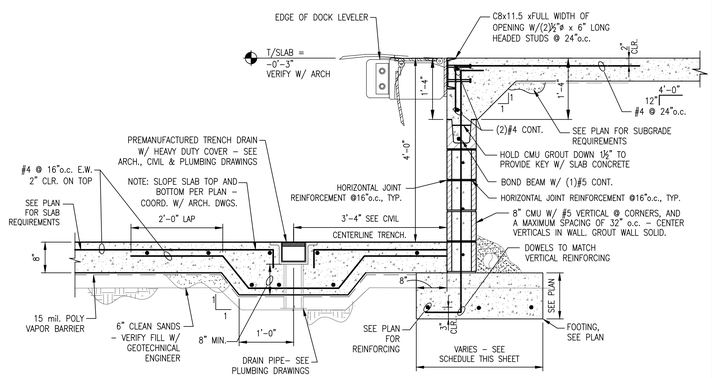

SECTION 14–14
SCALE: 3/4" = 1'-0"

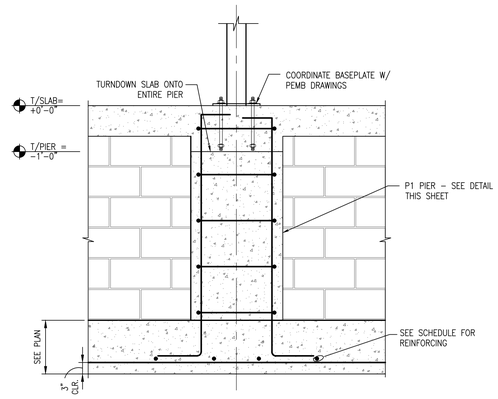

SECTION 15–15
SCALE: 3/4" = 1'-0"

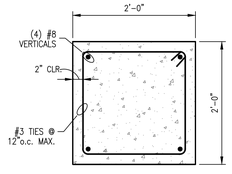

PIER "P1" PLAN VIEW
SCALE: 1" = 1'-0"

FOUNDATION SECTION NOTES

1. DO NOT SCALE SECTIONS. SEE PLANS AND SCHEDULES FOR SIZES NOT SHOWN.
2. REBAR IS SHOWN FOR REFERENCE ONLY. SEE PLANS AND SCHEDULES FOR REINFORCEMENT REQUIREMENTS. WHERE REINFORCEMENT IS SPECIFIED IN SECTIONS IT IS IN ADDITION TO SCHEDULES.
3. IF A HOOK IS SHOWN ON REINFORCEMENT A STANDARD HOOK PER ACI IS REQUIRED U.N.O.
4. IF A DISCREPANCY EXISTS BETWEEN THE SECTIONS AND PLAN THE MORE STRINGENT REQUIREMENTS SHALL APPLY

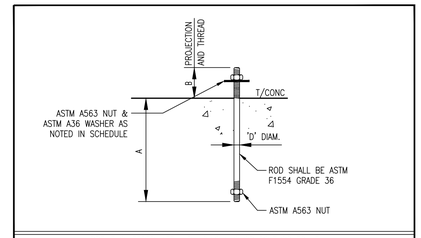

PRE–ENGINEERED METAL BUILDING ANCHOR BOLT SCHEDULE

MARK	BOLT DIAM. D	HOLE DIAMETER	A	B	TOP WASHER O.D. x t	LEVELING NUT	REMARKS
AB–1	¾"	1 5/16"	9"	5"	2" x ¼"	NO	

WOODS ENGINEERING
Consulting Structural Engineers
254 North Front Street Phone: 910.343.8007
Suite 201 Fax: 910.343.8088
Wilmington, NC 28401 www.woodseng.com

BOWMAN MURRAY HEMINGWAY
ARCHITECTS
514 Market Street
Wilmington, NC 28401
Tel - (910) 762-2621
Fax - (910) 762-8506

NORTH CAROLINA PROFESSIONAL ENGINEER CORPORATE SEAL No. C-1806 NORTH CAROLINA

NORTH CAROLINA PROFESSIONAL ENGINEER SEAL 041563 ADAM L. SISK

Digitally signed by Adam L. Sisk, PE, SE
DN: E=adam@woodseng.com, CN=Adam L. Sisk, PE, SE, O="Woods Engineering, P.A.", L=Wilmington, S=North Carolina, C=US
Location: Wilmington, NC
Reason: I attest to the accuracy and integrity of this document
Contact Info: adam@woodseng.com; (910) 343-8007
Date: 2020.07.21 13:54:35-04'00'

THE DAVIS COMMUNITY
Central Services Center
1011 Porter's Neck Road
Wilmington, North Carolina 28411

REV.	DATE	DESCRIPTION
	7-20-2020	PERMIT SET
NO.	DATE	ISSUE NOTE

Project Manager: ALS	Drawn By: MBK
Date: July 20, 2020	Reviewed By: ALS
Project ID: 20-3091	

Sheet Title: Foundation and Mezzanine Sections

Sheet No.: S3.01

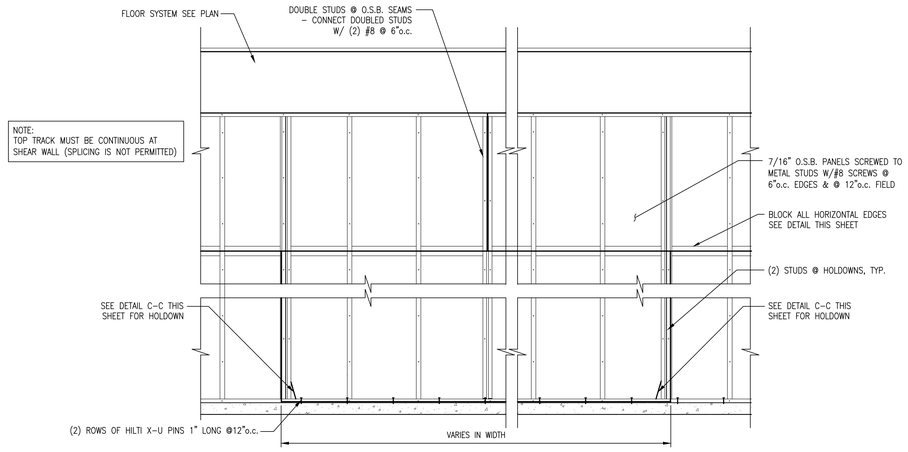

OSB PANEL SHEAR WALL ELEVATION @ SW–2

SCALE: 3/4" = 1'–0"

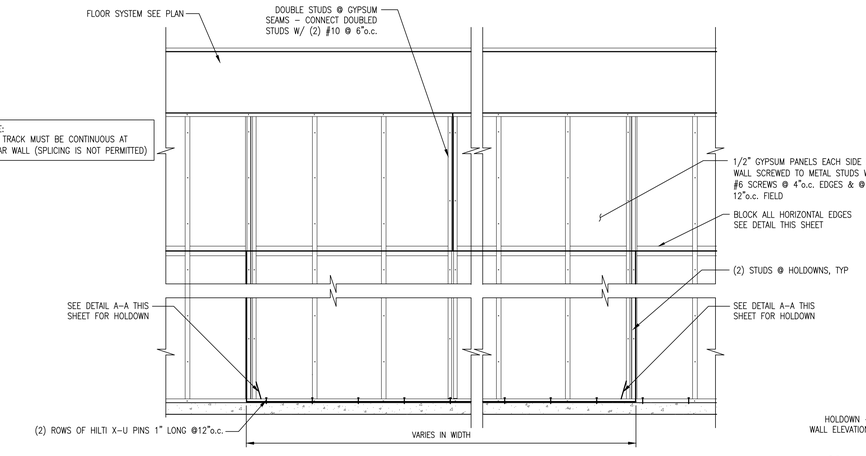

GYPSUM PANEL SHEAR WALL ELEVATION @ SW–1

SCALE: 3/4" = 1'–0"

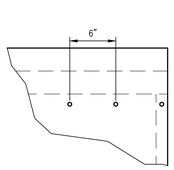

ENLARGED DETAIL

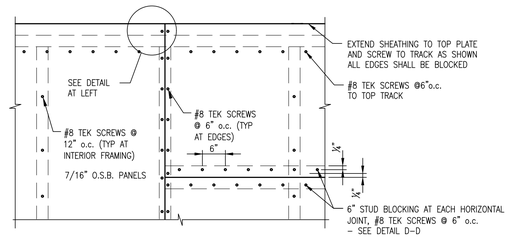

TYPICAL O.S.B. PANEL SHEAR WALL NAILING PATTERN @ SW–2

SHEAR WALL NOTES:

1. FOR GENERAL FRAMING INFORMATION, SEE SHEET S1.01
2. SEE DETAILS ON S3.01 & THIS SHEET FOR TYPICAL SHEAR WALL DETAILS.
3. SW–1: SHEAR WALL SHEATHING SHALL BE ½" GYPSUM BOTH SIDES OF WALL WITH #6 TYPE "S" OR "W" 1¼" LONG DRYWALL SCREWS @ 4"o.c. AT EDGES AND 12"o.c. IN FIELD, U.N.O.
4. SW–2: SHEAR WALL SHEATHING SHALL BE 7/16" OSB SINGLE SIDE W/ #8 TEK SCREWS @6"o.c. AT EDGES AND 12"o.c. IN FIELD, U.N.O.
5. ALL RODS SHALL BE ASTM A36.
6. ALL STUDS SHALL MATCH LOAD BEARING WALL SPACING AND SIZE.
7. ALL HOLDOWNS TO BE LOCATED A MAXIMUM DISTANCE OF 12" FROM END OF WALL (TYP. OF ALL SHEAR WALLS).
8. EPOXY SHALL BE HILTI HY–200. SEE DETAILS THIS SHEET FOR REQUIRED EMBEDMENT.

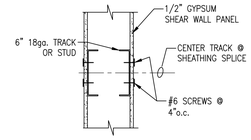

DETAIL B–B @ SW–1

SCALE: 1 1/2" = 1'–0"

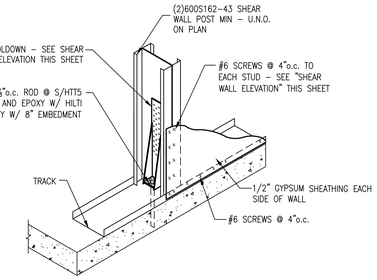

DETAIL A–A @ SW–1

SCALE: 3/4" = 1'–0"

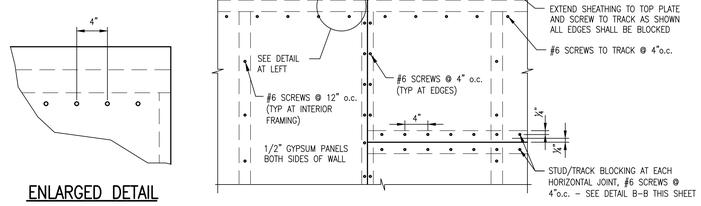

TYPICAL GYPSUM PANEL SHEAR WALL NAILING PATTERN @ SW–1

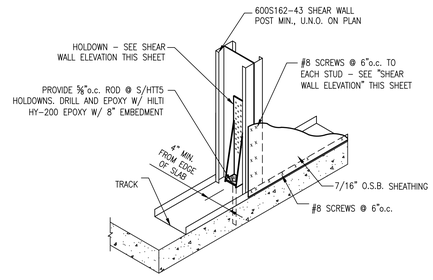

DETAIL C–C @ SW–2

SCALE: 3/4" = 1'–0"

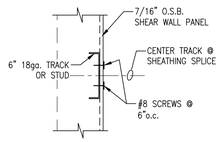

DETAIL D–D @ SW–2

SCALE: 1 1/2" = 1'–0"

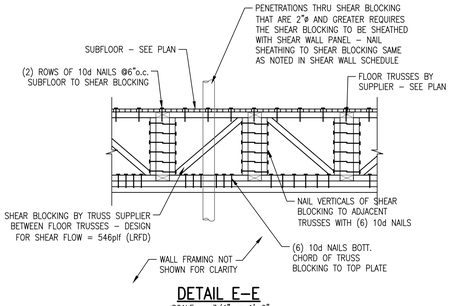

DETAIL E–E

SCALE: 3/4" = 1'–0"

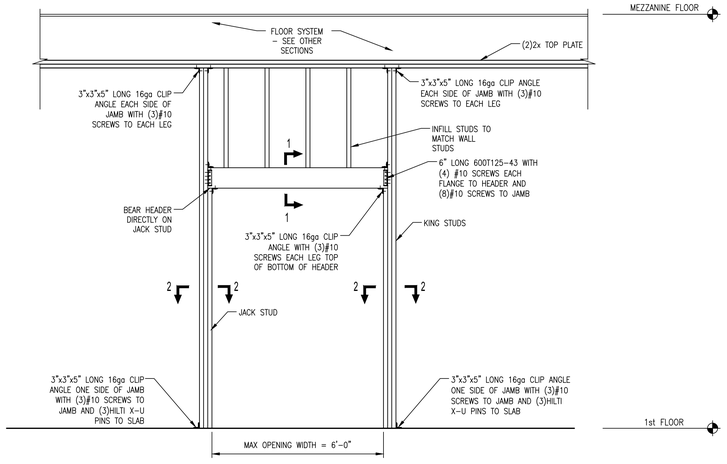

HEADER H1

SCALE: 1/2" = 1'–0"

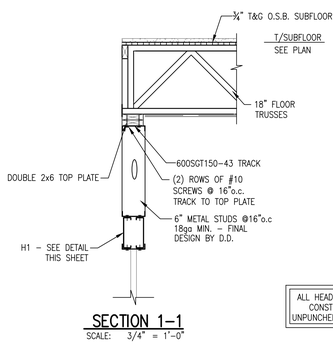

SECTION 1–1

SCALE: 3/4" = 1'–0"

ALL HEADERS ARE TO BE CONSTRUCTED WITH UNPUNCHED MATERIAL ONLY

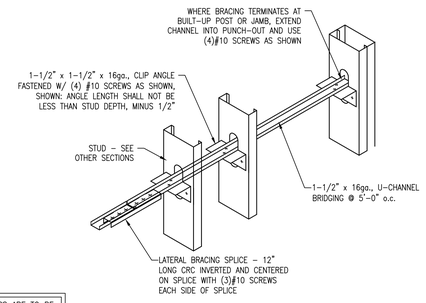

CRC BRIDGING DETAIL

SCALE: 3/4" = 1'–0"

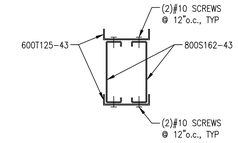

HEADER 1–1

SCALE: NTS = 1'–0"

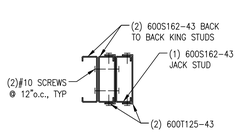

JAMB 2–2

SCALE: NTS = 1'–0"

WOODS ENGINEERING
Consulting Structural Engineers
254 North Front Street Phone: 910.343.8007
Suite 201 Fax: 910.343.8088
Wilmington, NC 28401 www.woodseng.com

BOWMAN MURRAY HEMINGWAY
ARCHITECTS
514 Market Street
Wilmington, NC 28401
Tel - (910) 762-2621
Fax - (910) 762-8506

WOODS ENGINEERING, P.A. CORPORATE SEAL No. C-1806 NORTH CAROLINA

NORTH CAROLINA PROFESSIONAL ENGINEER SEAL 041563 ADAM L. SISK

Digitally signed by Adam L Sisk, PE, SE
DN: E=adam@woodseng.com, CN=Adam L. Sisk, PE, SE", O="Woods Engineering, P.A", L=Wilmington, S=North Carolina, C=US
Location: Wilmington, NC
Reason: I am the author of this document
Contact Info: adam@woodseng.com; (910) 343-8007
Date: 2020.07.21 13:54:41-04'00'

NORTH CAROLINA PROFESSIONAL ENGINEER SEAL 041563 ADAM L. SISK

THE DAVIS COMMUNITY
Central Services Center
1011 Porter's Neck Road
Wilmington, North Carolina 28411

REV.	DATE	DESCRIPTION
	7-20-2020	PERMIT SET
NO.	DATE	ISSUE NOTE

Project Manager: ALS	Drawn By: MBK
Date: July 20, 2020	Reviewed By: ALS
Project ID: 20-3091	

Sheet Title: Shear Wall & Header Details and Sections

Sheet No.: S4.01

PLUMBING SPECIFICATIONS

PART 1 GENERAL

1.1 SCOPE OF WORK: THESE OUTLINE SPECIFICATIONS AND ACCOMPANYING DRAWINGS DESCRIBE SCOPE OF WORK REQUIRED FOR PLUMBING SYSTEMS. LABOR AND MATERIAL SHALL BE PROVIDED AS REQUIRED FOR A COMPLETE, WORKMANLIKE INSTALLATION OF ALL SYSTEMS SHOWN ON DIAGRAMMATIC DRAWINGS AND/OR AS SPECIFIED HEREIN.

1.2 CONTRACTOR: THE WORD "CONTRACTOR", "PLUMBING CONTRACTOR", AND "P.C." AS USED HEREIN SHALL MEAN THE PLUMBING INSTALLER UNLESS OTHERWISE QUALIFIED.

1.3 DRAWINGS: DRAWINGS ARE DIAGRAMMATIC AND MAY NOT COMPLETELY DESCRIBE EVERY DETAIL OF THE INSTALLATION. HOWEVER, CONTRACTOR IS RESPONSIBLE FOR FURNISHING COMPLETE SYSTEMS INCLUDING ALL REQUIRED EQUIPMENT AND ACCESSORIES TO OBTAIN FULLY FUNCTIONING PLUMBING SYSTEMS.

1.4 CODE COMPLIANCE: COMPLY WITH THE LATEST EDITIONS OF THE FOLLOWING STANDARDS AND CODES, INSOFAR AS THEY APPLY:

NORTH CAROLINA STATE BUILDING CODE (CODE), LATEST EDITION AND REVISIONS.

LOCAL JURISDICTION REQUIREMENTS.

1.5 PERMITS AND INSPECTIONS: OBTAIN ALL PERMITS, LICENSES, INSPECTIONS, ETC., SREQUIRED FOR THE WORK AND PAY FOR SAME. FURNISH A FINAL CERTIFICATE OF INSPECTION AND APPROVAL FROM THE AUTHORITY HAVING JURISDICTION PRIOR TO ACCEPTANCE OF THE WORK.

1.6 SUPERVISION: PROVIDE SKILLED SUPERINTENDENTS TO SUPERVISE THE WORK FROM THE BEGINNING TO COMPLETION AND FINAL INSPECTION.

1.7 PROGRESS OF WORK: PERFORM WORK IN ACCORDANCE WITH SCHEDULE AND REQUIREMENTS OF THE GENERAL CONTRACTOR [OWNER]. UNDER NO CIRCUMSTANCES SHALL THIS CONTRACTOR DELAY THE OVERALL PROJECT SCHEDULE.

1.8 COORDINATION: COORDINATE PLUMBING WORK WITH THE WORK OF OTHER TRADES. LOCATIONS SHOWN ON THE DRAWINGS ARE APPROXIMATE UNLESS SPECIFICALLY DIMENSIONED. ARRANGE PLUMBING SO AS NOT TO INTERFERE WITH THE WORK OF OTHER TRADES. VERIFY ACTUAL BUILDING STRUCTURE PRIOR TO PIPE FABRICATION AND ADJUST LAYOUT AS REQUIRED. INCLUDE ALL OFFSETS IN PIPING, FITTINGS, ETC. AS REQUIRED TO PROPERLY INSTALL EQUIPMENT.

1.9 EQUIPMENT LOCATIONS: DETERMINE EXACT EQUIPMENT AND MATERIALS LOCATIONS TO PROVIDE BEST ARRANGEMENT AND TO FACILITATE PROPER MAINTENANCE AND SERVICING OF EQUIPMENT.

1.10 LISTING AND LABELING: ALL EQUIPMENT SHALL BE LABELED OR LISTED BY UL OR OTHER APPROVED TESTING AGENCY WHERE REQUIRED.

1.11 STORAGE SPACE: CONSULT WITH THE GENERAL CONTRACTOR(OWNER) REGARDING JOB SITE STORAGE FOR PLUMBING MATERIALS TO BE INSTALLED UNDER THIS PROJECT. STORAGE SPACE MUST BE SECURED AND CONTRACTOR'S REPRESENTATIVE MUST BE ON JOB BEFORE ANY MATERIAL MAY BE RECEIVED.

1.12 CLEANUP: REMOVE ALL DEBRIS GENERATED IN THE ACCOMPLISHMENT OF WORK UNDER THIS PROJECT. CLEAN, REPLACE OR REPAIR ALL SURFACES SOILED OR DAMAGED DURING THE COURSE OF THE WORK. REMOVE DEBRIS DAILY SO TO MAINTAIN SAFE WORKING CONDITIONS.

1.13 ELECTRICAL WORK:

A. PERFORM ELECTRICAL WORK FOR PLUMBING EQUIPMENT IN COMPLIANCE WITH PROJECT ELECTRICAL REQUIREMENTS. ELECTRICAL WORK FOR PLUMBING EQUIPMENT NOT SPECIFICALLY INDICATED TO BE PROVIDED BY THE ELECTRICAL CONTRACTOR IN THE ELECTRICAL DRAWINGS AND SPECIFICATIONS FOR THIS PROJECT SHALL BE FURNISHED BY THE PLUMBING CONTRACTOR AS PART OF HIS WORK.

B. ELECTRICAL DRAWINGS ARE BASED ON ELECTRICAL CHARACTERISTICS INDICATED IN DRAWING PLUMBING EQUIPMENT SCHEDULES. ANY EQUIPMENT FURNISHED BY THE PLUMBING CONTRACTOR WHICH DOES NOT MATCH THE ELECTRICAL CHARACTERISTICS INDICATED IN THE DRAWING SCHEDULES SHALL BE COORDINATED WITH THE ELECTRICAL CONTRACTOR. ANY ADDITIONAL COSTS FOR ELECTRICAL INSTALLATION REQUIRED FOR EQUIPMENT NOT MATCHING THE DRAWING SCHEDULES SHALL BE BORNE BY THE PLUMBING CONTRACTOR.

1.14 PLUMBING WORK IN CONNECTION WITH OTHER CONTRACTS

A. PROVIDE PLUMBING SERVICES AS REQUIRED FOR ITEMS FURNISHED BY OTHER CONTRACTORS OR VENDORS AS SHOWN ON THE PLUMBING DRAWINGS. INCLUDE ROUGH-INS AND FINAL CONNECTIONS TO EQUIPMENT. LOCATIONS OF CONNECTIONS SHOWN ON THE DRAWINGS ARE APPROXIMATE AND SOME ADJUSTMENT OF ACTUAL CONNECTION LOCATIONS SHOULD BE ANTICIPATED. COORDINATE EXACT CONNECTION REQUIREMENTS. MAKE FINAL CONNECTIONS ONLY AFTER APPROVAL OF THE OTHER CONTRACTOR OR VENDOR, IN THE CONTRACTOR'S OR VENDOR'S PRESENCE.

B. NATURAL GAS SYSTEM- PROVIDE COMPLETE GAS PIPING SUPPLY FROM NATURAL GAS METER. COORDINATE EQUIPMENT GAS REQUIREMENTS WITH SUPPLIER. CONTRACTOR IS RESPONSIBLE FOR CONTACTING NATURAL GAS SUPPLIER AND COMPLYING WITH SUPPLIER CONNECTION AND SERVICE PIPING REQUIREMENTS. PROVIDE ALL REQUIRED VALVES, REGULATORS, ACCESSORIES AS SHOWN ON DRAWINGS.

C. SITE UTILITIES- IN GENERAL, WORK UNDER THIS DIVISION COVERS WORK TO FIVE FEET OUTSIDE BUILDINGS. EXTEND AND CONNECT WORK UNDER THIS DIVISION TO SITE UTILITIES AS REQUIRED.

D. OWNER FURNISHED EQUIPMENT- OBTAIN EXACT PLUMBING REQUIREMENTS AND ROUGH-IN LOCATIONS FOR OWNER FURNISHED EQUIPMENT. PROVIDE COMPLETE PLUMBING INSTALLATION FOR PROPER OPERATION OF EQUIPMENT.

1.15 SUBSTITUTIONS: MAJOR FIXTURES, EQUIPMENT, DEVICES, AND SPECIALTIES SHALL BE AS SCHEDULED ON THE DRAWINGS. MANUFACTURERS SHOWN OR NOTED ARE INTENDED FOR REFERENCE AS TO THE QUALITY AND TYPE OF EQUIPMENT DESIRED. COMPARABLE FIXTURES BY OTHER MANUFACTURERS MAY BE ACCEPTED IF, IN THE OPINION OF THE ARCHITECT/ENGINEER, THE LEVEL OF QUALITY IS EQUIVALENT TO SCHEDULED FIXTURES.

1.16 SUBMITTALS:

A. EQUIPMENT SUBMITTALS: SUBMIT ONE (1) ELECTRONIC COPY OF DESCRIPTIVE DATA FOR PLUMBING EQUIPMENT AND MATERIALS FOR APPROVAL BY THE ARCHITECT/ENGINEER. CLEARLY IDENTIFY ALL ITEMS.

B. OPERATING AND MAINTENANCE MANUALS: SUBMIT TWO COPIES OF COMPLETE OPERATING AND MAINTENANCE INSTRUCTIONS FOR ALL EQUIPMENT, INCLUDING NECESSARY CUT SHEETS, CHARTS, WRITTEN INSTRUCTIONS, WIRING DIAGRAMS, FINAL RECORD DRAWINGS, ETC. BIND IN SUITABLE HARD BACK RING BINDERS, PROPERLY INDEXED, AND DELIVER TO THE OWNER PRIOR TO BUILDING OCCUPANCY. IN ADDITION, AFFIX A FOLDER WITH TYPICAL "OWNERS INSTRUCTIONS" AND "MAINTENANCE INFORMATION" INSIDE THE MECHANICAL EQUIPMENT AS APPLICABLE. THE FOLDER SHALL ALSO INCLUDE A COMPLETE STARTUP LOG FOR THE EQUIPMENT.

1.17 RECORD DRAWINGS: MAINTAIN ONE SET OF "RED-LINED" RECORD DRAWINGS ON SITE AT ALL TIMES AND PROVIDE DRAWINGS TO ARCHITECT/ENGINEER PRIOR TO FINAL INSPECTION.

1.18 WARRANTY: WARRANTY THE MATERIALS AND WORKMANSHIP COVERED BY THESE DRAWINGS AND SPECIFICATIONS FOR A PERIOD OF ONE YEAR FROM THE DATE OF ACCEPTANCE BY THE OWNER. REPAIR AND/OR REPLACE ANY PARTS OF THE WORK THAT MAY PROVE TO BE DEFECTIVE AT NO ADDITIONAL COST TO THE OWNER WITHIN THE WARRANTY PERIOD.

PART 2 MATERIALS

2.1 GENERAL: ALL PLUMBING MATERIALS SHALL CONFORM TO APPLICABLE CODE REQUIREMENTS. [USE PIPING MATERIALS AND METHODS SUITABLE FOR USE IN RETURN AIR PLENUMS AS APPLICABLE,] UNLESS SPECIFICALLY INDICATED OTHERWISE, PROVIDE ALL NEW MATERIALS.

2.2 VALVES:

A. BALL VALVES, 3" AND SMALLER: ASTM B 62, 200 PSI WOG, TWO-PIECE CONSTRUCTION, BRASS BODY, STANDARD PORT, CHROME-PLATED BRASS BALL, REPLACEABLE "TFE" SEATS AND SEALS, VINYL-COVERED HANDLE, SOLDER ENDS.

B. CHECK VALVES, 3" AND SMALLER: MSS-SP-80, 125 PSI CWP, BRONZE BODY, Y-PATTERN, SOLDER ENDS.

2.3 HANGERS, SUPPORTS AND ANCHORS:

A. HANGERS, SUPPORTS AND ANCHORS - B-LINE, GRINNELL, PHD OR EQUAL, MANUFACTURED PRODUCTS. USE CLEVIS OR CLAMP HANGERS WITH THREADED ROD SUPPORTS AND SUITABLE FASTENERS TO BUILDING STRUCTURE. CHAIN, STRAP, PERFORATED STRAP, WIRE HANGERS OR WOOD PLUGS ARE PROHIBITED.

2.4 PIPING

A. DOMESTIC WATER PIPING (INTERIOR - ABOVE GROUND): ASTM B88 TYPE "L" HARD COPPER WITH SOLDER JOINTS; ASME B16.22 WROUGHT COPPER FITTINGS; ASTM B32 ALLOY SN95 (95%TIN/5%SILVER) SOLDER. ALL EXPOSED FIXTURE CONNECTION PIPING, SUCH AS EXTENSION TO FIXTURE STOPS, SHALL BE CHROME PLATED.

B. DOMESTIC WATER PIPING (BELOW GROUND OR SLAB): ASTM B88 TYPE "K" SOFT COPPER WITH SOLDER JOINTS; ASME B16.22 WROUGHT COPPER FITTINGS; ASTM B32 ALLOY SN95 (95%TIN/5%SILVER) SOLDER.

C. DRAIN, WASTE & VENT PIPING: ASTM D2665 PVC-DWV W/ PLAIN ENDS, SCHEDULE 40; SOCKET TYPE FITTINGS; PVC SOLVENT-CEMENTED JOINTS (COMBINATION SOLVENT CEMENTS ARE UNACCEPTABLE). CELLULAR CORE PIPE NOT ALLOWED.

D. DRAIN, WASTE & VENT PIPING (INTERIOR - ABOVE GROUND): ASTM A74 CAST IRON HUBLESS PIPE AND FITTINGS WITH MECHANICAL JOINT COUPLINGS COMPLYING WITH CISPI 310 OR ASTM C1277.

E. FORCE MAIN PIPING: ASTM D1785 SCH. 40 PVC PIPE & FITTINGS.

F. GAS PIPING: ASTM A53; TYPE E OR S; GRADE B; SCHEDULE 40; BLACK STEEL WITH MALLEABLE-IRON, ASME B16.3, CLASS 150, STANDARD PATTERN, THREADED ENDS PRE ASME B1.20.1. FLEXIBLE CONNECTORS SHALL BE ANSI Z21.24, COPPER ALLOY.

2.5 PIPE INSULATION:

A. PIPE INSULATION - MANSVILLE, KNAUF, OWENS-CORNING OR EQUAL. ASTM C547-77 CLASS 1 PREFORMED GLASS FIBER, 10 PCF MAX DENSITY WITH ALL PURPOSE PAPER AND FOIL JACKET.

B. WHERE DOMESTIC WATER PIPING IS EXPOSED TO VIEW, PROVIDE PVC JACKETING W/ PVC ELBOW JACKETS. PROVIDE VAPOR BARRIER ON ALL PIPE INSULATION.

C. INSULATION SCHEDULE:

DOMESTIC HOT AND COLD WATER

PIPE SIZE	THICKNESS
<1 INCH	1.0 INCH
1-1/4 THROUGH 2 INCHES	1.5 INCH

2.6 ADA INSULATION: TRUBRO OR EQUAL PREFORMED INSULATION COVERS FOR WATER AND WASTE CONNECTIONS UNDER SINKS AND LAVATORIES.

2.7 SPECIALITIES:

A. UNIONS - PROVIDE UNIONS TO PERMIT DISASSEMBLY FOR EQUIPMENT SERVICE, REPAIRS, OR REPLACEMENT. PROVIDE DIELECTRIC UNIONS FOR CONNECTIONS BETWEEN DISSIMILAR METALS.

B. ESCUTCHEONS - PROVIDE CHROME PLATED BRASS ESCUTCHEONS ON ALL EXPOSED PIPING PASSING THROUGH WALLS, FLOORS, OR CEILINGS.

2.8 BACKFLOW PREVENTERS - PROVIDE VACUUM BREAKER BACKFLOW PREVENTERS ON ALL HOSE OUTLETS AND OTHER LOCATIONS AS REQUIRED BY LOCAL AUTHORITY.

2.9 PLUMBING FIXTURES: PROVIDE FIXTURES AS SCHEDULED ON DRAWINGS OR EQUAL. INCLUDE ALL OPTIONS AND ACCESSORIES INDICATED OR AS REQUIRED FOR PROPER INSTALLATION.

PART 3 EXECUTION

3.1 PREPARATION: COMPARE DRAWINGS WITH FIELD CONDITIONS AND ADJUST INSTALLATION TO SUIT. NOTIFY ARCHITECT/ENGINEER OF ANY CONDITIONS WHICH WOULD PREVENT INSTALLATION OF PLUMBING WORK IN ACCORDANCE WITH THE INTENT OF THESE DOCUMENTS.

3.2 INSTALLATION: INSTALL ALL PLUMBING WORK IN ACCORDANCE WITH CODE, MANUFACTURER'S RECOMMENDATIONS AND GOOD INDUSTRY PRACTICE. ARRANGE WORK TO ALLOW EASY ACCESS TO EQUIPMENT FOR SERVICE AND MAINTENANCE.

3.3 INSTALL PLUMBING PIPING PER ACCEPTED INDUSTRY METHODS. PROVIDE PIPE SLEEVES WHERE PIPES PASS THROUGH WALLS.

3.4 PROVIDE ZONE SHUTOFF VALVES FOR WATER SUPPLIES ON BRANCH LINES AS PRESCRIBED BY CODE. LOCATE VALVES SO AS TO BE ACCESSIBLE.

3.5 INSTALL EQUIPMENT LEVEL AND PLUMB, PARALLEL AND PERPENDICULAR TO OTHER BUILDING SYSTEMS AND COMPONENTS IN EXPOSED INTERIOR SPACES, EXCEPT WHERE OTHERWISE INDICATED.

3.6 SLOPE WASTE PIPING AT 1/4"/FT FOR PIPE SIZES 2-1/2" AND LESS, AND 1/8"/FT FOR PIPE SIZES 3" AND LARGER. COORDINATE FINAL CONNECTIONS W/ GENERAL CONTRACTOR.

3.7 EXCAVATION - PERFORM ALL EXCAVATION, TRENCHING AND BACKFILLING NECESSARY TO INSTALL PLUMBING WORK. COMPLY WITH CODE. EXCAVATE TRENCHES OF UNIFORM WIDTHS TO PROVIDE A WORKING CLEARANCE ON EACH SIDE OF PIPE. EXCAVATE TRENCH WALLS VERTICALLY FROM TRENCH BOTTOM TO 12" HIGHER THAN TOP OF PIPE. SHAPE TRENCH BOTTOMS TO PROVIDE UNIFORM BEARING AND SUPPORT OF PIPES. SHAPE SUBGRADE TO PROVIDE CONTINUOUS SUPPORT FOR BELLS, JOINTS, AND BARRELS OF PIPES. REMOVE STONES AND SHARP OBJECTS TO AVOID POINT LOADING. SUPPORT PIPE ON UNDISTURBED SUBGRADE. BACKFILL WITH MATERIALS FREE OF PARTICLES LARGER THAN 1 INCH. BACKFILL AND COMPACT IN 12" LAYERS. BACKFILL AND COMPACT IN MANNER WHICH AVOIDS DAMAGE OR DISPLACEMENT.

3.8 SUPPORT AND FASTEN ALL ABOVE GROUND HORIZONTAL AND VERTICAL PIPING, EQUIPMENT ETC., SECURELY IN PLACE. SPACE, SECURE AND ADJUST HANGERS WITHOUT DEFLECTION OR SAG.

3.9 PROVIDE STEEL SUPPORTS, ANCHORS, FRAMES, BRACING, PLATES, BOLTS, NUTS, WASHERS, RODS, HANGERS, UPPER ATTACHMENTS, ETC., INCIDENTAL TO INSTALLATION OF WORK AS SPECIFIED OR REQUIRED. USE HANGERS COMPATIBLE TO COPPER PIPE WHERE BARE COPPER PIPE IS SUPPORTED.

3.10 SUPPORT EQUIPMENT FROM THE STRUCTURE IN AN APPROVED MANNER. NO PORTION OF THE STRUCTURE SHALL BE OVER STRESSED BY THE HANGING OPERATION OR BY THE FINAL SUPPORTS. PROVIDE AUXILIARY STRUCTURAL MEMBERS, SUCH AS 3"X3"X1/4" ANGLES, WHERE REQUIRED BETWEEN MEMBERS OF THE STRUCTURE AND SUPPORT EQUIPMENT OR DEVICE OFF ANGLES. ATTACHMENTS THAT ARE INADEQUATE, IN THE OPINION OF THE ARCHITECT/ENGINEER, SHALL BE REPLACED AS DIRECTED.

A. PIPE SUPPORT SPACING - AS FOLLOWS OR PER CODE IF MORE STRINGENT:

PVC - 4 FT INTERVALS FOR HORIZONTAL AND VERTICAL RUNS
COPPER - 6 FT INTERVALS FOR HORIZONTAL RUNS AND AT 4 FT INTERVALS FOR VERTICAL RUNS
STEEL - 6 FT INTERVALS FOR HORIZONTAL RUNS AND AT 4 FT INTERVALS FOR VERTICAL

3.11 PROVIDE CLEVIS STYLE HANGERS FOR INDIVIDUAL PIPE RUNS. ARRANGE HANGERS FOR WASTE PIPING SUCH THAT REQUIRED PIPE SLOPE IS MAINTAINED ALONG ENTIRE RUN OF PIPE.

3.12 ROUGH-INS - VERIFY FINAL LOCATION FOR ROUGH-INS W/ FIELD MEASUREMENTS AND WITH THE REQUIREMENTS OF THE ACTUAL EQUIPMENT TO BE CONNECTED. DETERMINE EXACT EQUIPMENT AND MATERIALS LOCATIONS TO PROVIDE BEST ARRANGEMENT AND TO FACILITATE PROPER MAINTENANCE AND SERVICING OF EQUIPMENT. DO NOT SCALE DRAWINGS. COORDINATE CLOSELY WITH G.C.

3.13 FLOOR MOUNT WATER CLOSETS - FIRMLY AFFIX FLOOR MOUNTED WATER CLOSETS TO FLOOR AND CAULK TO FLOOR USING WHITE SILICON CAULK.

3.14 WALL HUNG FIXTURES - FIRMLY SUPPORT FROM WALL (PROVIDE ADDITIONAL STRUCTURAL SUPPORT AS REQUIRED) AND CAULK TO WALL WITH WHITE SILICONE CAULK.

3.15 CUTTING & PATCHING - THIS CONTRACTOR IS RESPONSIBLE FOR ANY CUTTING AND PATCHING REQUIRED WHICH IS INCIDENTAL TO THE INSTALLATION OF HIS WORK. CUT, CHANNEL, CHASE, AND DRILL FLOORS, WALLS, PARTITIONS, CEILINGS, AND OTHER SURFACES NECESSARY FOR PLUMBING INSTALLATIONS. PERFORM CUTTING BY SKILLED MECHANICS OF THE TRADES INVOLVED. REPAIR CUT SURFACES USING MATERIALS MATCHING SPECIFIED MATERIALS AND METHODS REQUIRED FOR SURFACE.

3.16 CLEAN-UP: CONTRACTOR SHALL REMOVE ALL DEBRIS DUE TO THIS WORK AND SHALL REPAIR, CLEAN AND REPLACE ALL DAMAGED OR SOILED SURFACES AS A RESULT OF THIS WORK AT NO ADDITIONAL EXPENSE TO THE OWNER. REMOVAL OF DEBRIS SHALL BE DAILY AS REQUIRED TO MAINTAIN SAFE WORKING CONDITIONS.

3.17 TESTING AND START-UP

A. ALL COSTS OF TESTS SHALL BE BORNE BY THIS CONTRACTOR. SHOULD TEST REVEAL ANY DEFECTIVE MATERIAL OR WORKMANSHIP, SUCH WORK SHALL BE REPLACED AND TESTS REPEATED. ALL CORRECTIONS IN PIPING SHALL BE MADE USING NEW MATERIALS.

B. TESTING - TEST ALL PLUMBING SYSTEMS PER REQUIREMENTS OF CODE AND LOCAL AUTHORITY. PROVIDE DOCUMENTATION OF ACCEPTANCE.

C. DISINFECTION - DISINFECT POTABLE WATER SYSTEMS IN ACCORDANCE WITH CODE AND LOCAL AUTHORITY. PROVIDE WRITTEN DOCUMENTATION OF DISINFECTION ACCEPTANCE.

D. START-UP: START-UP, CHECK OUT AND ADJUST ALL PLUMBING WORK FOR PROPER OPERATION. DEMONSTRATE TO ARCHITECT/ENGINEER AND LOCAL AUTHORITY THAT ALL SYSTEMS ARE IN COMPLETE SERVICEABLE CONDITION AND WILL FUNCTION AS INTENDED.

E. CLEANING: AFTER ALL FIXTURES, EQUIPMENT, ETC., HAVE BEEN INSTALLED, THE ENTIRE SYSTEM SHALL BE THOROUGHLY CLEANED. ALL PIPE FITTINGS, EQUIPMENT, ETC., SHALL BE CLEANED OF PIPE JOINT COMPOUND, GREASE, METAL SHAVINGS, ETC., WHICH HAVE ACCUMULATED THEREON. ALL DAMAGE OR DISCOLORATION OF FIXTURES OR BUILDING DUE TO FAILURE TO CLEAN UP THOROUGHLY OR FLUSH OUT PIPING PROPERLY SHALL BE CORRECTED WITHOUT ADDITIONAL COST TO THE OWNER.

PLUMBING LEGEND

CA	COMPRESSED AIR PIPING
C	CONDENSATE PIPING
140°F	DOMESTIC 140°F WATER PIPING
140R	DOMESTIC 140°F RETURN WATER PIPING
	DOMESTIC COLD WATER PIPING
	DOMESTIC HOT WATER CIRCULATION PIPING
	DOMESTIC HOT WATER PIPING
F	FILTERED WATER PIPING
SP	FIRE SPRINKLER PIPING
FM	FORCE MAIN PIPING
NG	GAS PIPING (NAT. OR LP)
GW	GREASE WASTE PIPING
N2	NITROUS OXIDE PIPING
O2	O2 (OXYGEN) PIPING
OD	OVERFLOW ROOF DRAIN PIPING
RD	ROOF DRAIN PIPING
	SANITARY VENT PIPING
	SANITARY WASTE PIPING
T	TEPID WATER PIPING
VAC	VACUUM PIPING
	BACKFLOW PREVENTION DEVICE
	BALL VALVE
	CHECK VALVE
	CIRCUIT SETTER (BALANCING VALVE)
	CIRCULATION PUMP
	CONTROL VALVE
	EXTENT OF DEMOLITION
FCO	FLOOR CLEANOUT
FD	FLOOR DRAIN
FS	FLOOR SINK
	GAS-REGULATOR VALVE
	GATE VALVE
	GATE VALVE IN RISER
GCO	GRADE CLEANOUT
HB	HOSE BIBB
	PIPE CAP
	PIPE ELBOW
	PIPE ELBOW DOWN
	PIPE ELBOW UP
	PIPE TEE
	PIPE TEE DOWN
	PIPE TEE UP
SP FM	SUMP PUMP
1	DEMOLITION KEYED NOTE TAG
1	NEW WORK KEYED NOTE
	POINT OF CONNECTION - NEW TO EXISTING
	PRESSURE REDUCING VALVE
	SOLENOID VALVE
M 140°F	THERMOSTATIC MIXING VALVE
WCO	WALL CLEANOUT
WH	WALL HYDRANT
	WASHING MACHINE BOX
SA	WATER HAMMER ARRESTOR

NOTE: ALL ITEMS LISTED IN THIS SCHEDULE MAY NOT BE USED IN PROJECT

CBHF
Engineers, PLLC
2246 Yaupon Drive
Wilmington, NC 28401
Phone: 910.791.4000
Fax: 910.791.5266
www.cbhfengineers.com

© Copyright 2020CBHF Engineers, PLLC
NC# P-0506

PLUMBING ABBREVIATIONS

(X)	EXISTING
AAV	AIR ADMITTANCE VALVE
A.F.F.	ABOVE FINISHED FLOOR
A.R.C.I.	ACID RESISTANT CAST IRON
ADA	AMERICANS WITH DISABILITIES ACT
BRZ.	BRONZE
BT	BATHTUB
C.I.	CAST IRON
CO	CLEANOUT
CONC.	CONCRETE
DCW	DOMESTIC COLD WATER
DHW	DOMESTIC HOT WATER
DIA.	DIAMETER
E.C.I.	ENAMELED CAST IRON
EC	ELECTRICAL CONTRACTOR
EWC	ELECTRIC WATER COOLER
EWH	ELECTRIC WATER HEATER
FCO	FLOOR CLEANOUT
FD	FLOOR DRAIN
FS	FLOOR SINK
GA.	GAUGE
GAL.	GALLON
GC	GENERAL CONTRACTOR
GCO	GRADE CLEANOUT
GPF	GALLONS PER FLUSH
GPH	GALLONS PER HOUR
GPM	GALLONS PER MINUTE
GWH	GAS-FIRED WATER HEATER
HB	HOSE BIBB
INCL.	INCLUDED
KS	KITCHEN SINK
LAV	LAVATORY
LP	LIQUID PROPANE
MS	MOP SERVICE BASIN
NAT.	NATURAL GAS
NKL.	NICKEL
NON SIMULT.	NON SIMULTANEOUS
O.F.L.C.	OPEN FRONT LESS COVER
OB	OUTLET BOX
OC	ON CENTER
ORDL	OVERFLOW ROOF DRAIN LEADER
PC	PLUMBING CONTRACTOR
PRESS. BAL.	PRESSURE BALANCED
RCVY.	RECOVERY
RDL	ROOF DRAIN LEADER
SA	WATER HAMMER ARRESTOR
SH	SHOWER
SK	SINK
SLD.	SLIDE
SS	STAINLESS STEEL
TDH	TOTAL DYNAMIC HEAD
UR	URINAL
V	VENT
VB	VACUUM BREAKER
VC	VITREOUS CHINA
VR	VANDAL RESISTANT
VTR	VENT THROUGH ROOF
W	WASTE
WC	WATER CLOSET
WCO	WALL CLEANOUT
WH	WALL HYDRANT

NOTE: ALL ABBREVIATIONS MAY NOT BE USED IN PROJECT.

PLUMBING LOADS

WASTE (DRAINAGE FIXTURE UNITS)	29.5
WATER	44 GPM

BOWMAN MURRAY HEMINGWAY
ARCHITECTS
514 Market Street
Wilmington, NC 28401
Tel - (910) 762-2621
Fax - (910) 762-8506

NORTH CAROLINA PROFESSIONAL ENGINEER SEAL 10592 JAMES R. BENSON II
7/20/20

THE DAVIS COMMUNITY
Central Services Center
1011 Porter's Neck Road
Wilmington, North Carolina 28411

REV.	DATE	DESCRIPTION

NO.	DATE	ISSUE NOTE
	7-20-2020	PERMIT SET

Project Manager: JRB	Drawn By: JBS
Date: July 20, 2020	Reviewed By: JRB
Project ID: CBHF: 20060	

Sheet Title: PLUMBING SPECIFICATIONS, LEGEND, ABBREVIATIONS AND LOADS

Sheet No.: P001

PLUMBING FIXTURE SCHEDULE

DRAWING CODE	FIXTURE		DESCRIPTION	MANUFACTURER	MODEL	ALTERNATE APPROVED MANUFACTURERS	NOTES	PIPE SIZE			
								DCW	DHW	WASTE	VENT
WC1	HANDS FREE FLUSH VALVE. WATER CLOSET FLOOR MTD., 1.6GPF, ADA	BOWL	16.5" HIGH BOWL, ELONGATED, V.C., 2-1/8" TRAPWAY; TOP SPUD; MADERA	AMERICAN STANDARD	3043.001	ZURN, KOHLER		1"	-	4"	2"
		FLUSH VALVE	11.5" HIGH BATTERY OPERATED, 1.6GPF	SLOAN	SLOAN 8111	ZURN, TEC					
		SEAT	OFLC w/ SELF-SUSTAINING S.S. CHECK HINGE; HEIGHT 17-19" AFF	CHURCH	295SSCT	BEMIS, OLSONITE					
LAV1	LAVATORY WALL HUNG, 0.5GPM, ADA	BOWL	20x18 VITREOUS CHINA, RIM 34" AFF MAX.	AMERICAN STANDARD	0355.012	ZURN, CRANE	1,2,3,9,	1/2"	1/2"	2"	2"
		FAUCET	SOLID BRASS BODY, CHROME PLATED FINISH, 4"CENTERSET, INFARED SENSOR, BATTERY POWERED. 0.5GPM	MOEN	CA8301	SLOAN, ZURN					
		DRAIN	GRID STRAINER	MCGUIRE	155A	DEARBORN, DELTA					
		MIXING VALVE	LEAD FREE THERMOSTATIC MIXING VALVE - SETPOINT = 90°F INSTALL ON HOT WATER SUPPLY, ASSE 1070	CASH ACME	HG-135	LEONARD, WATTS					
SK1	2-COMPARTMENT COUNTERTOP SINK, 7.5" DEEP, ADA (SIDE APPROACH)	BOWL	33x22x7.5, 18 GA S.S.	ELKAY	LR3322	JUST, ACORN	2,4,5,9,	1/2"	1/2"	2"	2"
		FAUCET	180° SWING SPOUT, SINGLE LEVER HANDLE, 3 HOLE, 1.5GPM, SOLID BRASS CONSTRUCTION, CHROME FINISH	MOEN	8701	DELTA, ZURN					
		DRAIN	BASKET STRAINER	ELKAY	LK35	ZURN, MOEN					
MS1	MOP SINK	BASIN	24x24x10 MOLDED STONE w/ GRID STRAINER	FIAT	MSB-2424	FLORESTONE, ZURN		1/2"	1/2"	3"	2"
		FAUCET	BRASS CONSTRUCTION, ROUGH CHROME FINISH, INTEGRAL VACUUM BREAKER, INTEGRAL CHECK STOPS, 3/4"THREADED SPOUT, SERVICE STOPS, WALL MOUNT, VANDAL RESISTANT, LEVER HANDLES	MOEN	8124	DELTA, ZURN					
		ACCESSORIES	HOSE/BRACKET, MOP HANGER	MOEN	8198, 8199	DELTA, ZURN					
LS1	FLOOR MOUNT LAUNDRY SINK	SINK	23x22x12 MOLDED STONE w/ GRID DRAIN	FIAT	FL-1	SWANSTONE, MUSTEE	9,10	1/2"	1/2"	2"	2"
		FAUCET	CHROME PLATED BRASS, 4" WRIST BLADE HANDLES, VANDAL RESISTANT, CERAMIC CARTRIDGE	MOEN	74998	DELTA, ZURN					
SH1	PREFAB TRANSFER SHOWER, ADA	ENCLOSURE	36x36 ACRYLIC- 1/2" CURB MAX. w/ GRAB BARS, FOLD-UP SEAT, CENTER DRAIN, CURTAIN ROD AND SHOWER CURTAIN	AQUATIC	3636BFS	ACRYLINE, AQUARIUS		1/2"	1/2"	2"	2"
		VALVE	PRESS. BALANCED MIXING VALVE, LEVER HANDLE, DIVERTER, HEAD W/ ARM, FLANGE, WALL/HAND SHOWER, FLEXIBLE METAL HOSE, IN-LINE VAC. BREAKER, 30"SLIDE BAR, 1.5GPM	MOEN	8342EP15	DELTA, SYMMONS					
		DRAIN	4-3/8" DIA. NICKEL BRONZE STRAINER, PVC	SIOUX CHIEF	821	SMITH, ZURN					
EWC1	WALL HUNG WATER COOLER, ADA	FIXT	SPLIT LEVEL, S.S. TOP, LIGHT GREY BODY, BOTTLE FILLING STATION, 8 GPH @ 50/80/90, 120V/1PH WITH FILTER	ELKAY	ELZSTL8WSLP	HALSEY TAYLOR, OASIS	1,11	1/2"	-	2"	2"
GWH1	GAS WATER HEATER, 100 GAL, DIRECT VENT	FIXT	GLASS LINED, NAT. GAS, 199 MBH INPUT, 230 GPH RCVY. @ 100 DEG RISE	A.O. SMITH	BTH-199	BRADFORD WHITE, RHEEM		1-1/2"	1-1/2"	-	-
		EXP TANK	10 GAL DIAPHRAGM		TW-10					-	-
GWH2	GAS WATER HEATER, 100 GAL, DIRECT VENT	FIXT	GLASS LINED, NAT. GAS, 199 MBH INPUT, 230 GPH RCVY. @ 100 DEG RISE	A.O. SMITH	BTH-199	BRADFORD WHITE, RHEEM		1-1/2"	1-1/2"	-	-
		EXP TANK	10 GAL DIAPHRAGM		TW-10					-	-
FCO	FLOOR CLEANOUT	FIXT	C.I. BODY, 6-1/2"TOPS, ADJUSTABLE, SCORIATED, NICKEL BRONZE TOP	SIOUX CHIEF	834	ZURN, SMITH		-	-	MATCH	-
GCO	GRADE CLEANOUT	FIXT	C.I. BODY, RECESSED BRONZE PLUG.	SIOUX CHIEF	877	ZURN, SMITH		-	-	MATCH	-
WCO	WALL CLEANOUT	FIXT	ROUND S/S ACCESS COVER & SCREW, RECESS BRONZE THRD. PLUG	SIOUX CHIEF	870	ZURN, SMITH		-	-	MATCH	-
FD1	FLOOR DRAIN	FIXT	FINISHLINE ADJUSTABLE, SCH. 40 HUB CONNECTION, ABS/PVC BASE ADAPTER, ROUND NICKEL BRONZE STRAINER	SIOUX CHIEF	832	ZURN, SMITH		-	-	MATCH	-
LI1	LINT INTERCEPTOR	FIXT	INDOOR/OUTDOOR POLYETHYLENE INT INTERCEPTOR,	SCHIER	PS-125-S			-	-	6"	-
CP1	HOT WATER RECIRCULATION PUMP	FIXT	IN-LINE WET ROTOR, STAINLESS STEEL VOLUTE, 3-SPEED, 115/1/60, 125W. BUILT IN THERMAL PROTECTION. 10GPM@10'TDH	GRUNDFOS	UPS 15-55	B&G, MYERS		-	MATCH	-	-
HB1	INTERIOR HOSE BIBB	FIXT	POLISHED CHROME, VACUUM BREAKER, WHEEL HANDLE, 3/4" HOSE THREAD	WOODFORD	24	ZURN, WATTS		1/2"	-	-	-
WH1	WALL HYDRANT	FIXT	CHROME PLATED BRASS, ANTI-SIPHON, VACUUM BREAKER, REMOVABLE TEE HANDLE, 3/4" HOSE THREAD	WOODFORD	65	ZURN, WATTS		3/4"	-	-	-
OB1	ICE MAKER BOX	FIXT	ABS HOUSING, 1/4 TURN BALL VALVE, CHROME PLATED BRASS, SHOCK ARRESTORS	SIOUX CHIEF	696	OATEY, IPS		1/2"	-	-	-
RPZ	BACKFLOW PREVENTER	FIXT	REDUCED PRESS. ZONE TYPE, LEAD FREE	WATTS	LF009	FEBCO, WILKINS		MATCH			
TMV1	THERMOSTATIC MIXING VALVE	FIXT	THERMOSTATIC MIXING VALVE WITH THERMOMETER AND SHUT OFF VALVE	LAWLER	802	WATTS, LEONARD		1"	1"	-	-

NOTES
1. PROVIDE MATCHING WALL HANGER. COORDINATE WITH G.C. FOR WALL REINFORCING.
2. PROVIDE BRASS 1-1/2" TAILPIECE, CAST BRASS SLIP JOINT P-TRAP WITH CLEANOUT; PROVIDE ADA OFFSET ARRANGEMENT WHERE REQUIRED.
3. PROVIDE ADA INSULATION KIT
4. COORDINATE WITH MILLWORK.
5. COORDINATE ADA MILLWORK ENCLOSURE FOR WATER AND DRAIN PIPING UNDER SINK.
6. TRIP LEVER OR FLUSH HANDLE TO BE LOCATED ON WIDE SIDE OF STALL OR TOILET ROOM.
7. PROVIDE TRAP PRIMER
8. FIELD ROUTE 1" DRAIN PAN DRAIN PIPING TO CLOSEST INDIRECT DRAIN OR SPILL TO GRADE.
9. PROVIDE 1/2" IPS X 3/8" OD ANGLE BRASS STOP(S) WITH RIGID COPPER RISERS. ALL EXPOSED PIPING SHALL BE CHROME PLATED.
10. PROVIDE INLINE CHECK VALVES FOR WATER SUPPLY LINES.
11. PROVIDE 1/2"IPS x 3/8" O.D. BRASS STOP CONCEALED BEHIND CABINET.

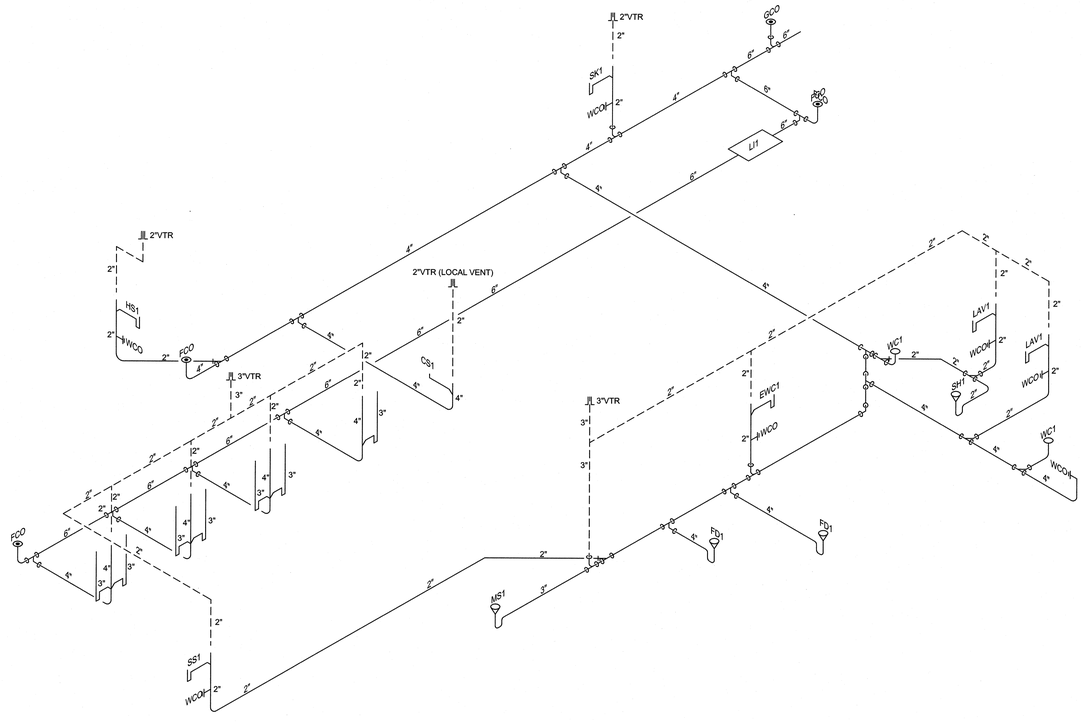

E1 / P002 WASTE-VENT RISER DIAGRAM
Not To Scale

CBHF Engineers, PLLC
2246 Yaupon Drive
Wilmington, NC 28401
Phone: 910.791.4000
Fax: 910.791.5266
www.cbhfengineers.com
NC# P-0506

© Copyright 2020CBHF Engineers, PLLC

BOWMAN MURRAY HEMINGWAY
ARCHITECTS
514 Market Street
Wilmington, NC 28401
Tel - (910) 762-2621
Fax - (910) 762-8506

NORTH CAROLINA PROFESSIONAL ENGINEER SEAL 40592 JAMES R. BENSON, II 7/20/20

THE DAVIS COMMUNITY
Central Services Center
1011 Porter's Neck Road
Wilmington, North Carolina 28411

REV.	DATE	DESCRIPTION

NO.	DATE	ISSUE NOTE
	7-20-2020	PERMIT SET

Project Manager: JRB	Drawn By: JBS
Date: July 20, 2020	Reviewed By: JRB
Project ID: CBHF: 20060	

Sheet Title: PLUMBING SCHEDULES AND RISER DIAGRAM

Sheet No.: P002

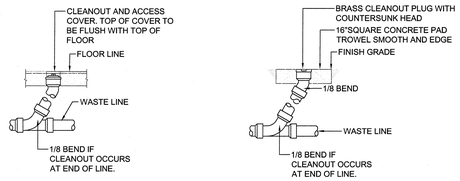

FLOOR CLEANOUT (FCO)

GRADE CLEANOUT (GCO)

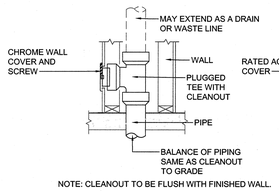

NOTE: CLEANOUT TO BE FLUSH WITH FINISHED WALL.

WALL CLEANOUT (WCO)

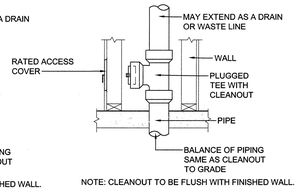

NOTE: CLEANOUT TO BE FLUSH WITH FINISHED WALL.

WALL CLEANOUT (WCO) RATED WALL

B1 / P003 CLEANOUT DETAILS
Not To Scale

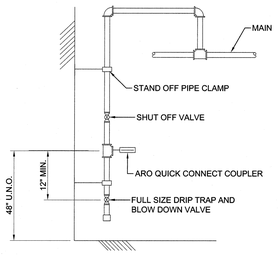

B3 / P003 COMPRESSED AIR DROP DETAIL
Not To Scale

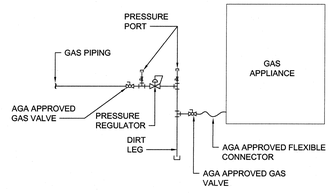

B4 / P003 GAS APPLIANCE CONNECTION DETAIL
Not To Scale

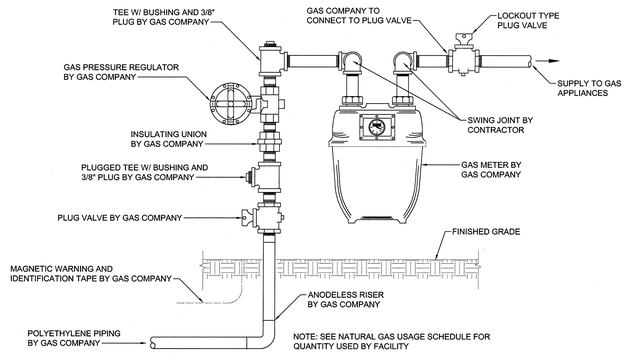

B5 / P003 GAS SERVICE DETAIL
Not To Scale

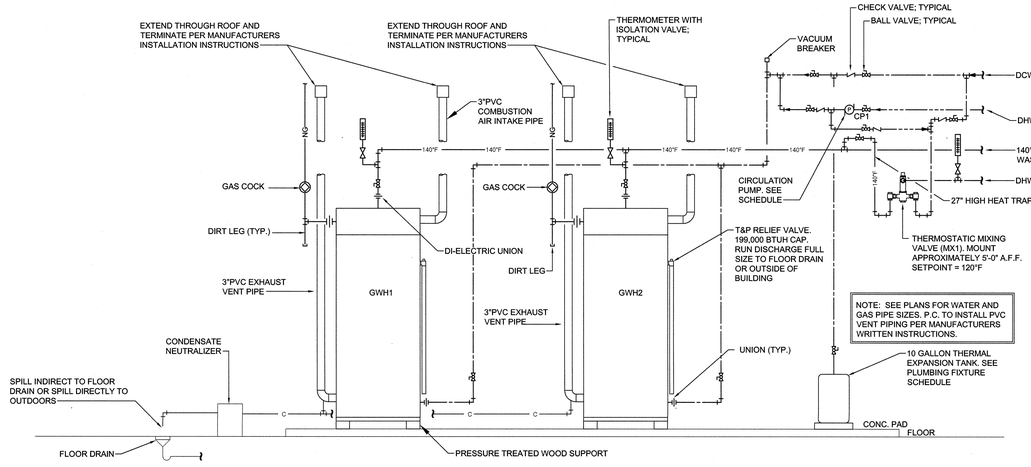

D1 / P003 GAS WATER HEATER DETAIL
Not To Scale

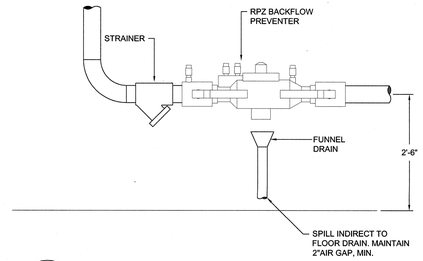

D4 / P003 REDUCED PRESSURE BACKFLOW PREVENTER DETAIL
Not To Scale

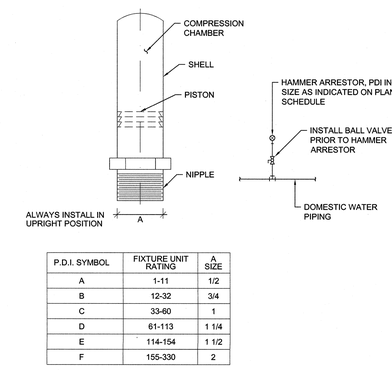

P.D.I. SYMBOL	FIXTURE UNIT RATING	A SIZE
A	1-11	1/2
B	12-32	3/4
C	33-60	1
D	61-113	1 1/4
E	114-154	1 1/2
F	155-330	2

D5 / P003 HAMMER ARRESTOR SCHEDULE AND DETAIL
Not To Scale

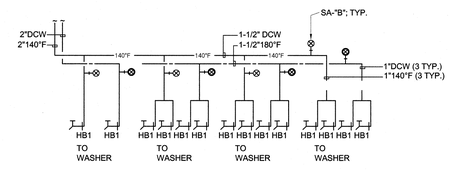

E1 / P003 COMMERCIAL WASHER WATER CONNECTION DETAIL
Not To Scale

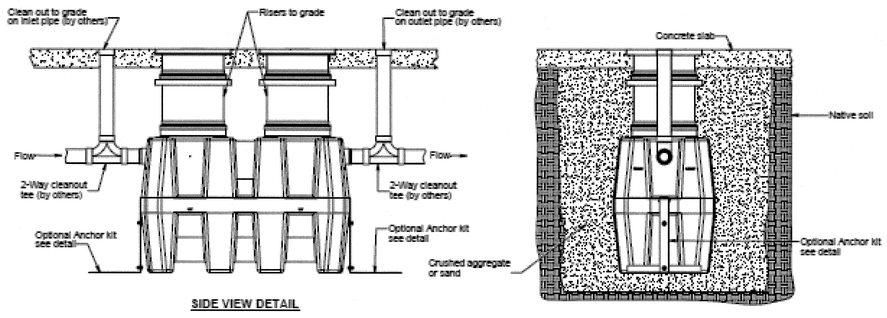

SIDE VIEW DETAIL

E4 / P003 LINT INTERCEPTOR DETAIL
Not To Scale

CBHF Engineers, PLLC
2246 Yaupon Drive
Wilmington, NC 28401
Phone: 910.791.4000
Fax: 910.791.5266
www.cbhfengineers.com
NC# P-0506
© Copyright 2020CBHF Engineers, PLLC

BOWMAN MURRAY HEMINGWAY
ARCHITECTS
514 Market Street
Wilmington, NC 28401
Tel - (910) 762-2621
Fax - (910) 762-8506

NORTH CAROLINA PROFESSIONAL ENGINEER SEAL 10592 JAMES B. SENSOR II
7/20/20

THE DAVIS COMMUNITY
Central Services Center
1011 Porter's Neck Road
Wilmington, North Carolina 28411

REV.	DATE	DESCRIPTION

NO.	DATE	ISSUE NOTE
	7-20-2020	PERMIT SET

Project Manager: JRB	Drawn By: JBS
Date: July 20, 2020	Reviewed By: JRB
Project ID: CBHF: 20060	

Sheet Title: PLUMBING DETAILS

Sheet No.: P003

KEYED NOTES DOMESTIC WATER PLAN

1. PROVIDE (1) 3/4" DCW CONNECTION AND (1) 3/4" DHW CONNECTION
2. PROVIDE (2) 3/4" DCW CONNECTIONS AND (2) 3/4" DHW CONNECTIONS.
3. PROVIDE AND INSTALL CIRC SETTER BALANCING VALVE WITH SHUT OFF VALVE.
4. MAIN SHUTOFF VALVE IN VALVE BOX
5. 2" DOMESTIC WATER SERVICE. REFER TO SITE UTILITY PLAN FOR CONTINUATION.
6. P.C. TO PROVIDE AND INSTALL DISHWASHER CONNECTION KIT.
7. REFER TO GAS WATER HEATER DETAIL FOR FURTHER INFORMATION.
8. WATER SOFTNER TO BE PROVIDE BY OWNER. P.C. TO PROVIDE PIPING CONNECTIONS AND A FULL SIZE BYPASS AROUND SOFTENER EQUIPMENT.
9. PIPE DISCHARGE FROM RPZ INDIRECT TO FLOOR DRAIN.

KEYED NOTES WASTE-VENT PLAN

1. 4" STANDPIPE 36" IN LENGTH, MIN.
2. DOUBLE 4" STANDPIPE. 36" IN LENGTH, MIN.
3. TO SANITARY SEWER. SEE SITE UTILITY PLAN FOR CONTINUATION.

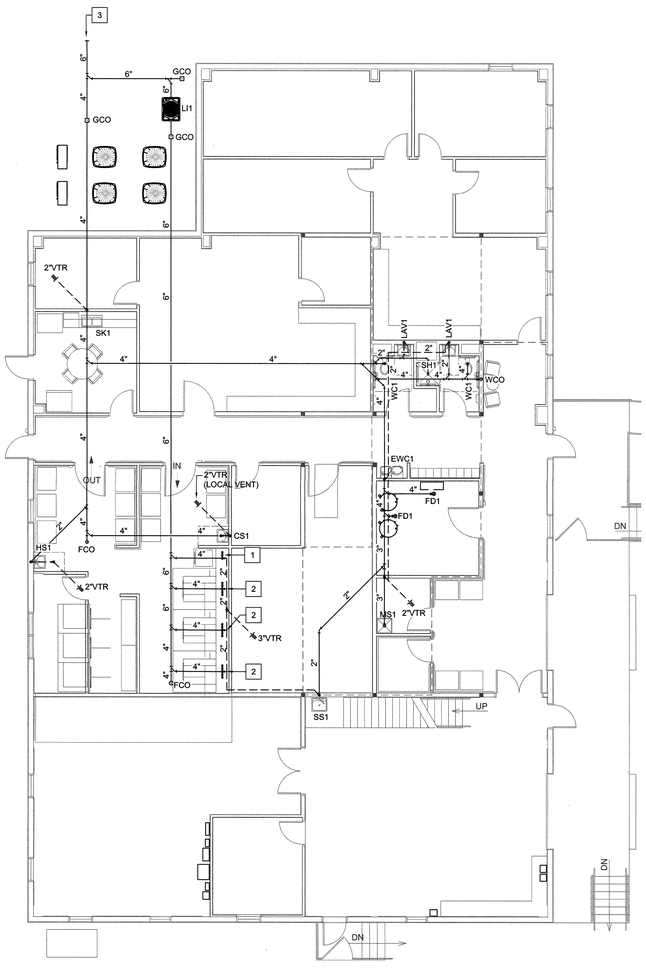

PROJECT NORTH

1 / P101 **FIRST FLOOR WASTE-VENT PLAN**

scale: 1/8"=1'-0"

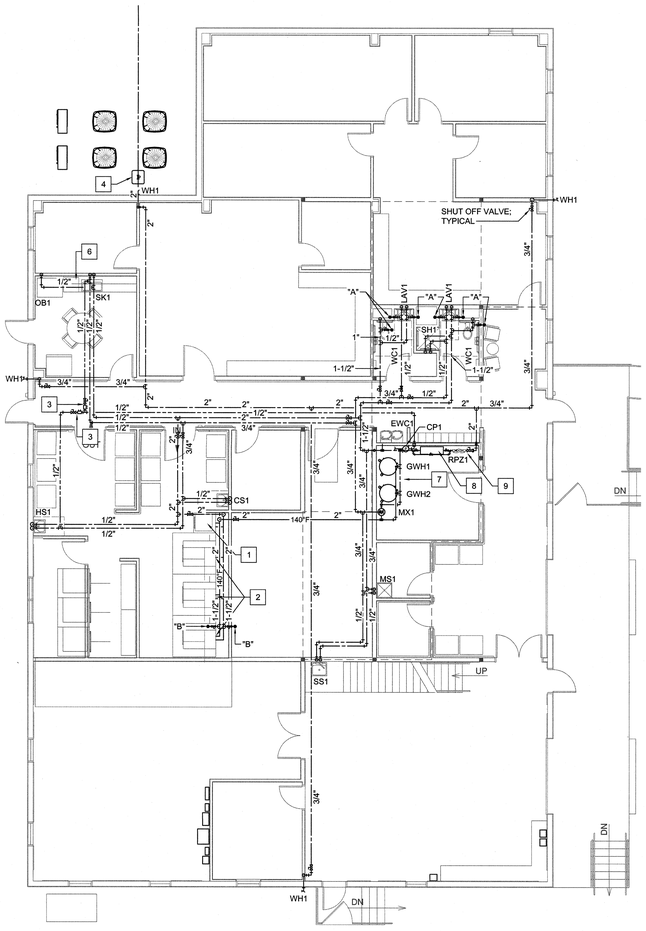

PROJECT NORTH

2 / P101 **FIRST FLOOR DOMESTIC WATER PLAN**

scale: 1/8"=1'-0"

CBHF Engineers, PLLC
2246 Yaupon Drive
Wilmington, NC 28401
Phone: 910.791.4000
Fax: 910.791.5266
www.cbhfengineers.com
NC# P-0506

© Copyright 2020CBHF Engineers, PLLC

BOWMAN MURRAY HEMINGWAY ARCHITECTS
514 Market Street
Wilmington, NC 28401
Tel - (910) 762-2621
Fax - (910) 762-8506

NORTH CAROLINA PROFESSIONAL ENGINEER SEAL 10362 JAMES R. BENSON

THE DAVIS COMMUNITY
Central Services Center

1011 Porter's Neck Road
Wilmington, North Carolina 28411

REV.	DATE	DESCRIPTION

NO.	DATE	ISSUE NOTE
	7-20-2020	PERMIT SET

Project Manager: JRB	Drawn By: JBS
Date: July 20, 2020	Reviewed By: JRB
Project ID: CBHF: 20060	

Sheet Title: PLUMBING WASTE-VENT AND DOMESTIC WATER PLANS

Sheet No.: P101

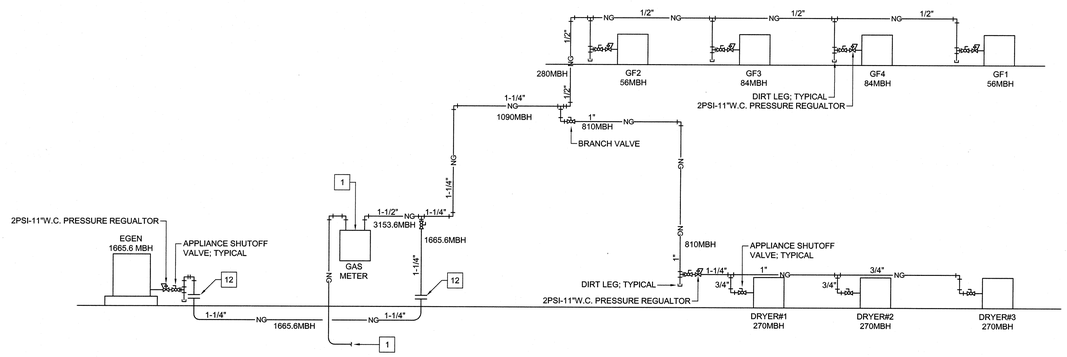

3 / P101 **GAS PIPING RISER DIAGRAM**
scale: NONE

KEYED NOTES

1. GAS METER AND GAS SERVICE BY GAS UTILITY.
2. GAS PIPING DOWN TO BELOW GRADE TO EMERGENCY GENERATOR. INSTALL PER PIPING PER CHAPTER 4 OF THE NC FUEL GAS CODE, LATEST EDITION.
3. 2 PSI-11"W.C. PRESSURE REGULATOR.
4. RELOCATED AIR COMPRESSOR. SUPPLIED BY OWNER, INSTALLED BY CONTRACTOR.
5. RISE PIPING IN WALL AND ROUTE TO MAINTENANCE ROOM. ROUTE HIGH ALONG WALL.
6. ROUTE PIPING ABOVE OFFICE CEILING.
7. ROUTE GAS PIPING UP ALONG INTERIOR WALL AND ROUTE HIGH ACROSS ROOM.
8. ROUTE PIPING UP TO MECHANICAL MEZZANINE ABOVE. SEE CONTINUATION ON PLAN 2 THIS SHEET.
9. COMPRESSED AIR DROP. SEE DETAIL B3/P003.
10. GAS PIPING FROM BELOW.
11. REFER TO DETAIL B4/P003 FOR PIPING CONNECTION DETAIL.
12. TRANSITION TO UNDERGROUND PIPING MATERIAL.

GAS LOAD SCHEDULE

FIXTURE TAG	DESCRIPTION	BTUH RATING	QUANTITY	TOTAL
GWH1	GAS-FIRED WATER HEATER	199,000	1	199,000
GWH2	GAS-FIRED WATER HEATER	199,000	1	199,000
GF1	GAS-FIRED FURNACE	56,000	1	56,000
GF2	GAS-FIRED FURNACE	56,000	1	56,000
GF3	GAS-FIRED FURNACE	84,000	1	84,000
GF4	GAS-FIRED FURNACE	84,000	1	84,000
DRYER1	GAS-FIRED DRYER	270,000	1	270,000
DRYER2	GAS-FIRED DRYER	270,000	1	270,000
DRYER3	GAS-FIRED DRYER	270,000	1	270,000
EGEN	EMERGENCY GENERATOR	1,665,600	1	1,665,600
TOTAL LOAD				3,153,600
BUILDING SERVICE GAS PRESSURE				2 psi

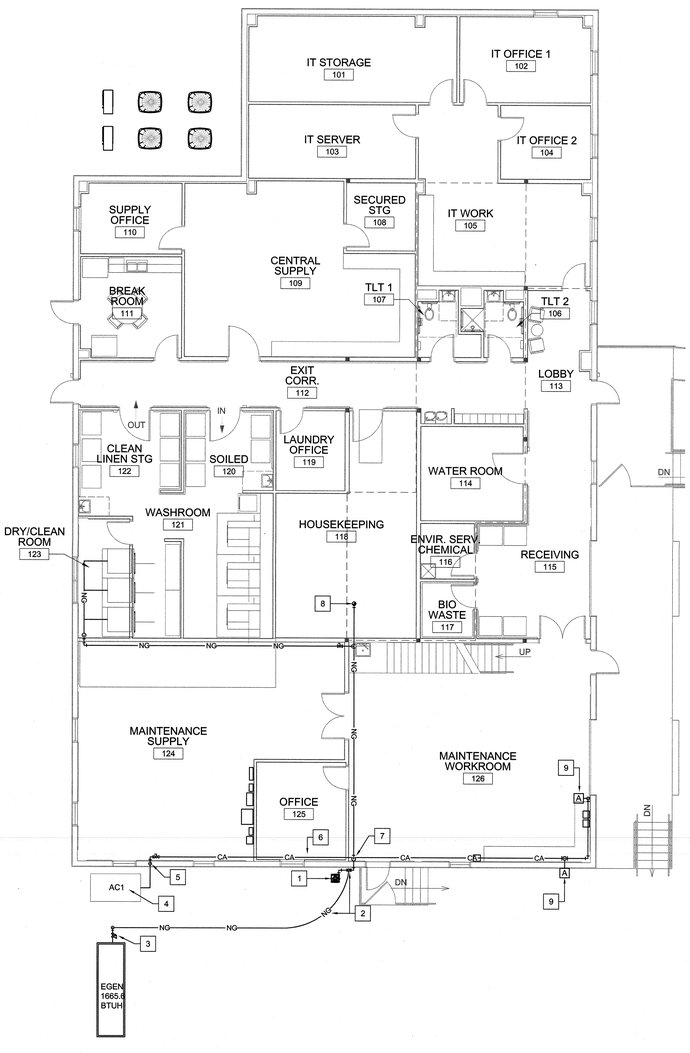

PROJECT NORTH
1 / P101 **FIRST FLOOR PLAN**
scale: 1/8"=1'-0"

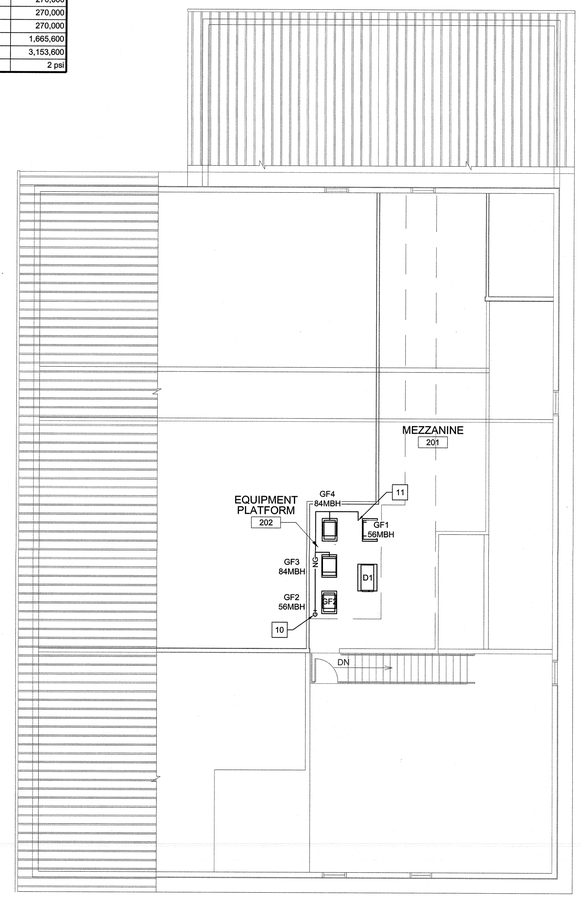

PROJECT NORTH
2 / P101 **MEZZANINE FLOOR PLAN**
scale: 1/8"=1'-0"

CBHF Engineers, PLLC
2246 Yaupon Drive
Wilmington, NC 28401
Phone: 910.791.4000
Fax: 910.791.5266
www.cbhfengineers.com
NC# P-0506
© Copyright 2020CBHF Engineers, PLLC

BOWMAN MURRAY HEMINGWAY
ARCHITECTS
514 Market Street
Wilmington, NC 28401
Tel - (910) 762-2621
Fax - (910) 762-8506

NORTH CAROLINA PROFESSIONAL ENGINEER SEAL 10592 JAMES R. BENSON III 7/20/20

THE DAVIS COMMUNITY
Central Services Center
1011 Porter's Neck Road
Wilmington, North Carolina 28411

REV.	DATE	DESCRIPTION
	7-20-2020	PERMIT SET

NO.	DATE	ISSUE NOTE

Project Manager: JRB	Drawn By: JBS
Date: July 20, 2020	Reviewed By: JRB
Project ID: CBHF: 20060	

Sheet Title: PLUMBING NATURAL GAS AND COMPRESSED AIR PLANS AND RISER

Sheet No.: P201

CBHF
Engineers, PLLC
2246 Yaupon Drive
Wilmington, NC 28401
Phone: 910.791.4000
Fax: 910.791.5266
www.cbhfengineers.com
NC# P-0506
© Copyright 2020CBHF Engineers, PLLC

ABBREVIATIONS

Term	Abbreviation
ABOVE FINISHED FLOOR	AFF
ABOVE SEA LEVEL	ASL
ACROSS THE LINE	ACL
AIR CONDITION(-ING, -ED)	AIR COND
AIR-HANDLING UNIT	AHU
AMBIENT	AMB
AMERICAN NATIONAL STANDARDS INSTITUTE	ANSI
AMPERE (AMP, AMPS)	AMP
APPARATUS DEW POINT	ADP
APPROXIMATE	APPROX
ATMOSPHERE	ATM
AVERAGE	AVG
BRAKE HORSEPOWER	BHP
BROWN & SHARPE WIRE GAGE	B&S
BRITISH THERMAL UNIT	BTU
BUILDING	BLDG
CELSIUS	°C
CHILLED WATER RETURN	CHWR
CHILLED WATER SUPPLY	CHWS
COEFFICIENT, VALVE FLOW	CV
COMPRESSOR	COMP
CONDENS(-ER, -ING, -ATION)	COND
CONNECTION	CONN
COOLING LOAD	CLG LOAD
CUBIC FEET	CU FT
CUBIC INCH	CU IN
CUBIC FEET PER MINUTE	CFM
CFM, STANDARD CONDITIONS	SCFM
DECIBEL	DB
DEGREE	DEG OR °
DEW-POINT TEMPERATURE	DPT
DIAMETER	DIA
DIAMETER, INSIDE	ID
DIAMETER, OUTSIDE	OD
DIFFERENCE OR DELTA	DIFF
DRY-BULB TEMPERATURE	DBT
ENERGY EFFICIENCY RATING	ERR
EFFICIENCY	EFF
ELEVATION	EL
ENTERING	ENT
ENTERING WATER TEMPERATURE	EWT
ENTERING AIR TEMPERATURE	EAT
EXTERNAL AMBIENT TEMPERATURE	EAT
FACE VELOCITY	FVEL
FAHRENHEIT	°F
FEET PER MINUTE	FPM
FEET PER SECOND	FPS
FOOT OR FEET	FT
GAGE OR GAUGE	GA
GALLONS	GAL
GALLONS PER HOUR	GPH
GALLONS PER MINUTE	GPM
GALLONS PER DAY	GPD
GRAINS	GR
HEAD	HD
HEIGHT	HGT
HIGH-PRESSURE STEAM	HPS
HORSEPOWER	HP
HOUR(S)	HR
HUMIDITY, RELATIVE	RH
INTERGRATED PART LOAD VALUES	IPLV
INCH	IN.
IRON PIPE SIZE	IPS
KILOVOLT-AMP	KVA
KILOWATT	KW
KILOWATT HOUR	KWH
LEAVING AIR TEMPERATURE	LAT
LEAVING WATER TEMPERATURE	LWT
LENGTH	LG
LINEAR FEET	LF
LOW-PRESSURE STEAM	LPS
MAXIMUM	MAX
MEDIUM-PRESSURE STEAM	MPS
MILES PER HOUR	MPH
MINIMUM	MIN.
MINUTE	MIN
MANUFACTURER	MFR
NOISE CRITERIA	NC
NON-STANDARD PART LOAD	NPLV
NORMALLY OPEN	NO
NORMALLY CLOSED	NC
NOT APPLICABLE	N/A
NOT IN CONTACT	N I C
NOT TO SCALE	NTS
NUMBER	NO
ON CENTER	OC
OUNCE	OZ
OUTSIDE AIR	OA
PARTS PER MILLION	PPM
PERCENT	%
POUNDS	LBS
POUNDS PER SQUARE FOOT	PSF
PRESSURE	PRESS
QUANTITY	QTY
RATED LOAD AMPS	RLA
RECIRCULATE	RECIRC
REFRIGERANT (12, 22, ETC.)	R12, R22
RELATIVE HUMIDITY	RH
RETURN AIR	RA
REVOLUTIONS PER MINUTE	RPM
REVOLUTIONS PER SECOND	RPS
SAFETY FACTOR	SF
SECOND	S
SHADING COEFFICIENT	SC
SPECIFICATION	SPEC
SQUARE	SQ
STANDARD	STD
STATIC PRESSURE	SP
SUPPLY	SPLY
SUPPLY AIR	SA
TEMPERATURE	TEMP
TEMPERATURE DIFFERENCE	TD
THERMOSTAT	T STAT
TONS OF REFRIGERATION	TONS
TO BE DETERMINED	TBD
TOTAL DYNAMIC HEAD	TDH
U-FACTOR	U
VARIABLE AIR VOLUME	VAV
VELOCITY	VEL
VENTILATION, VENT	VENT
VERTICAL	VERT
VOLT	V
VOLT AMPERE	VA
VOLUME	VOL
WATER PRESSURE DROP	WPD
WATT	W
WATT-HOUR	WH
WEIGHT	WT
WET BULB	WB
YARD	YD
YEAR	YR

NOTE: ALL ABBREVIATIONS MAY NOT BE USED IN PROJECT.

MECHANICAL SPECIFICATIONS

PART 1 GENERAL

1.1 SCOPE OF WORK: THESE DRAWINGS AND SPECIFICATIONS DESCRIBE THE SCOPE OF WORK REQUIRED FOR PROJECT MECHANICAL HEATING, VENTILATING AND AIR CONDITIONING SYSTEMS. CONTRACTOR SHALL PROVIDE ALL LABOR AND MATERIAL REQUIRED FOR COMPLETE, FULLY FUNCTIONING MECHANICAL SYSTEMS COMPLYING WITH THE INTENT OF THE DRAWINGS AND SPECIFICATIONS.

1.2 CONTRACTOR: THE WORD "CONTRACTOR" AS USED HEREIN SHALL MEAN THE HVAC INSTALLER UNLESS OTHERWISE QUALIFIED.

1.3 DRAWINGS: DRAWINGS ARE DIAGRAMMATIC AND MAY NOT COMPLETELY DESCRIBE EVERY DETAIL OF THE INSTALLATION. HOWEVER, CONTRACTOR IS RESPONSIBLE FOR FURNISHING COMPLETE SYSTEMS INCLUDING ALL REQUIRED EQUIPMENT AND ACCESSORIES TO OBTAIN FULLY FUNCTIONING HVAC SYSTEMS.

1.4 CODE COMPLIANCE: COMPLY WITH THE LATEST EDITIONS OF THE FOLLOWING STANDARDS AND CODES, INSOFAR AS THEY APPLY:

A. NORTH CAROLINA STATE BUILDING CODE, LATEST EDITION AND REVISIONS

B. LOCAL JURISDICTION REQUIREMENTS: INCLUDE ALL WORK TO COMPLY WITH CODES WHETHER INDICATED ON DRAWINGS OR NOT. NOTIFY ENGINEER OF DISCREPANCIES BETWEEN DRAWINGS AND CODES PRIOR TO BEGINNING WORK.

1.5 PERMITS AND INSPECTIONS: OBTAIN ALL PERMITS, LICENSES, INSPECTIONS, ETC., REQUIRED FOR THE WORK AND PAY FOR SAME. FURNISH A FINAL CERTIFICATE OF INSPECTION AND APPROVAL FROM THE AUTHORITY HAVING JURISDICTION PRIOR TO ACCEPTANCE OF THE WORK.

1.6 MANUFACTURER'S RECOMMENDATIONS: INSTALL ALL EQUIPMENT IN STRICT ACCORDANCE WITH MANUFACTURER'S RECOMMENDATIONS.

1.7 WORKMANSHIP: UTILIZE SKILLED MECHANICS TO OBTAIN A HIGH QUALITY PROFESSIONAL FINISH INSTALLATION WHEN COMPLETED. WORK OF UNACCEPTABLE QUALITY SHALL BE REMOVED AND REWORKED AT NO ADDITIONAL COST. ENGINEER SHALL BE THE JUDGE OF WORKMANSHIP AND THEIR OPINION WILL BE FINAL. IN ADDITION, ANY EXISTING CONSTRUCTION DAMAGED BY THE CONTRACTOR SHALL BE REPAIRED OR REPLACED TO THE SATISFACTION OF THE ENGINEER BY THE CONTRACTOR AT NO ADDITIONAL COST.

1.8 SUPERVISION: PROVIDE SKILLED SUPERINTENDENTS TO SUPERVISE THE WORK FROM THE BEGINNING TO COMPLETION AND FINAL INSPECTION.

1.9 PROGRESS OF WORK: PERFORM WORK IN ACCORDANCE WITH SCHEDULE AND REQUIREMENTS OF THE OWNER. UNDER NO CIRCUMSTANCES SHALL THIS CONTRACTOR DELAY THE OVERALL PROJECT SCHEDULE.

1.10 COORDINATION: COORDINATE MECHANICAL WORK WITH THE WORK OF OTHER TRADES. LOCATIONS SHOWN ON THE DRAWINGS ARE APPROXIMATE UNLESS SPECIFICALLY DIMENSIONED. LAYOUT MECHANICAL WORK SO AS NOT TO INTERFERE WITH THE WORK OF OTHER TRADES. VERIFY ACTUAL BUILDING STRUCTURE PRIOR TO DUCT FABRICATION AND ADJUST ARRANGEMENT AS REQUIRED. INCLUDE ALL OFFSETS IN DUCTS, FITTINGS, PIPING, ETC. AS REQUIRED TO PROPERLY INSTALL EQUIPMENT.

1.11 EQUIPMENT LOCATIONS: DETERMINE EXACT EQUIPMENT AND MATERIALS LOCATIONS TO PROVIDE BEST ARRANGEMENT AND TO FACILITATE PROPER MAINTENANCE AND SERVICING OF EQUIPMENT.

1.12 LISTING AND LABELING: ALL EQUIPMENT SHALL BE LABELED OR LISTED BY UL OR OTHER APPROVED TESTING AGENCY WHERE REQUIRED.

1.13 STORAGE SPACE: CONSULT WITH THE OWNER REGARDING JOB SITE STORAGE FOR MECHANICAL MATERIALS TO BE INSTALLED UNDER THIS PROJECT. STORAGE SPACE MUST BE SECURED AND CONTRACTOR'S REPRESENTATIVE MUST BE ON JOB BEFORE ANY MATERIAL MAY BE RECEIVED.

1.14 CLEANUP: REMOVE ALL DEBRIS GENERATED IN THE ACCOMPLISHMENT OF WORK UNDER THIS PROJECT. CLEAN, REPLACE OR REPAIR ALL SURFACES SOILED OR DAMAGED DURING THE COURSE OF THE WORK. REMOVE DEBRIS DAILY SO TO MAINTAIN SAFE WORKING CONDITIONS.

1.15 ELECTRICAL WORK

A. PERFORM ELECTRICAL WORK FOR MECHANICAL EQUIPMENT IN COMPLIANCE WITH PROJECT ELECTRICAL REQUIREMENTS. ELECTRICAL WORK FOR MECHANICAL EQUIPMENT NOT SPECIFICALLY INDICATED TO BE PROVIDED BY THE ELECTRICAL CONTRACTOR IN THE ELECTRICAL DRAWINGS AND SPECIFICATIONS FOR THIS PROJECT SHALL BE FURNISHED BY THE MECHANICAL CONTRACTOR AS PART OF HIS WORK.

B. ELECTRICAL DRAWINGS ARE BASED ON ELECTRICAL CHARACTERISTICS INDICATED IN DRAWING MECHANICAL EQUIPMENT SCHEDULES. ANY EQUIPMENT FURNISHED BY THE MECHANICAL CONTRACTOR WHICH DOES NOT MATCH THE ELECTRICAL CHARACTERISTICS INDICATED IN THE DRAWING SCHEDULES SHALL BE COORDINATED WITH THE ELECTRICAL CONTRACTOR. ANY ADDITIONAL COSTS FOR ELECTRICAL INSTALLATION REQUIRED FOR EQUIPMENT NOT MATCHING THE DRAWING SCHEDULES SHALL BE BORNE BY THE MECHANICAL CONTRACTOR.

C. LOW VOLTAGE CONTROL WIRING FOR MECHANICAL SYSTEMS SHALL BE FURNISHED BY THE MECHANICAL CONTRACTOR.

1.16 SUBMITTALS: SUBMIT ONE (1) ELECTRONIC COPY OF DESCRIPTIVE DATA FOR MECHANICAL EQUIPMENT AND MATERIALS INCLUDING GRILLES AND DAMPERS FOR APPROVAL BY THE ENGINEER. CLEARLY IDENTIFY ALL ITEMS.

1.17 OPERATING AND MAINTENANCE MANUALS: SUBMIT TWO COPIES OF COMPLETE OPERATING AND MAINTENANCE INSTRUCTIONS FOR ALL EQUIPMENT, INCLUDING NECESSARY CUT SHEETS, CHARTS, WRITTEN INSTRUCTIONS, WIRING DIAGRAMS, FINAL AS-BUILT DRAWINGS WITH BALANCED AIRFLOWS INDICATED, ETC. BIND IN SUITABLE HARD BACK RING BINDERS, PROPERLY INDEXED, AND DELIVER TO THE OWNER PRIOR TO BUILDING OCCUPANCY. IN ADDITION, AFFIX A FOLDER WITH TYPICAL "OWNER'S INSTRUCTIONS" AND "MAINTENANCE INFORMATION" INSIDE THE MECHANICAL EQUIPMENT AS APPLICABLE. THE FOLDER SHALL ALSO INCLUDE A COMPLETE STARTUP LOG FOR THE EQUIPMENT.

1.18 RECORD DRAWINGS: MAINTAIN ONE SET OF "RED-LINED" RECORD DRAWINGS ON SITE AT ALL TIMES AND PROVIDE DRAWINGS TO ENGINEER PRIOR TO FINAL INSPECTION.

1.19 WARRANTY: WARRANTY THE MATERIALS AND WORKMANSHIP COVERED BY THESE DRAWINGS AND SPECIFICATIONS FOR A PERIOD OF ONE YEAR FROM THE DATE OF ACCEPTANCE BY THE OWNER. REPAIR AND/OR REPLACE ANY PARTS OF ANY SYSTEM THAT MAY PROVE TO BE DEFECTIVE AT NO ADDITIONAL COST TO THE OWNER WITHIN THE WARRANTY PERIOD. PROVIDE 5 YEAR WARRANTY FOR ALL AIR CONDITIONING COMPRESSORS. FURNISH WARRANTY CERTIFICATES FOR ALL MECHANICAL EQUIPMENT. WARRANTY TO COMMENCE UPON DATE OF ACCEPTANCE OF WORK BY OWNER.

PART 2 MATERIALS

2.1 EQUIPMENT

A. MODELS AS SCHEDULED ON THE DRAWINGS. MANUFACTURERS INDICATED ARE INTENDED TO ESTABLISH THE QUALITY AND TYPE OF EQUIPMENT DESIRED. COMPARABLE EQUIPMENT WILL BE CONSIDERED FOR APPROVAL BY THE ARCHITECT/ENGINEER

B. INCLUDE ALL ACCESSORIES INDICATED OR AS RECOMMENDED BY THE MANUFACTURER FOR PROPER OPERATION.

2.2 DUCTWORK

A. DUCT CONSTRUCTION : GALVANIZED STEEL CONSTRUCTED, BRACED, SUPPORTED AND INSTALLED ACCORDING TO SMACNA HVAC DUCT CONSTRUCTION STANDARDS, 1" PRESSURE CLASS, SEAL CLASS A. SEAL USING APPROVED TYPE DUCT SEALING MASTIC OR TAPE DIPPED IN OR BRUSHED WITH ADHESIVE ("HARDCAST" DT-TAPE W/FTA-20 ADHESIVE OR "UNITED MCGILL" MTD TAPE W/MTD-20 ADHESIVE). "DUCT TAPE" IS UNACCEPTABLE FOR DUCT SEALING. "DUCT-MATE" OR EQUAL TRANSVERSE JOINT CONNECTION METHODS WILL BE ACCEPTABLE ONLY IF A LETTER FROM THE MANUFACTURER IS PRESENTED TO THE ENGINEER STATING THAT THE CONTRACTOR'S INSTALLATION METHODS ARE APPROVED BY THE MANUFACTURER AND THAT ALL MANUFACTURER'S RECOMMENDATIONS WILL BE FOLLOWED. THERE WILL BE NO EXCEPTIONS TO THIS STIPULATION.

B. DUCT SIZES INDICATED ARE INSIDE FREE AREA DIMENSIONS. DUCT DIMENSIONS SHALL BE ADJUSTED TO SUIT FIELD CONDITIONS USING EQUIVALENT SIZE PER ASHRAE STANDARD. RECTANGULAR OR ROUND DUCTWORK MAY BE USED AT CONTRACTOR OPTION PROVIDED EQUIVALENT SIZE PER ASHRAE STANDARD IS USED.

C. BRANCH DUCTS: PROVIDE MANUFACTURED TAKE-OFF FITTINGS WITH EXTRACTOR AND VOLUME DAMPER WITH LOCKING QUADRANT OPERATOR AND INSULATION GUARD, GENERAL ENVIRONMENT CORPORATION OR EQUAL, FOR ALL BRANCH RUNOUTS TO SUPPLY REGISTERS AND DIFFUSERS. UNLESS OTHERWISE NOTED, MATCH SUPPLY BRANCH DUCT SIZE TO DIFFUSER SIZE.

D. ELBOWS: ALL SQUARE BENDS OR ELBOW FITTINGS SHALL BE FITTED WITH APPROVED TYPE DOUBLE THICKNESS TURNING VANES.

E. FLEXIBLE DUCT: FACTORY INSULATED, R-8, MINIMUM, UL 181 CLASS 1. MAXIMUM FLEX DUCT RUNOUT LENGTH NOT TO EXCEED 8' UNLESS OTHERWISE NOTED. INSTALL AND SUPPORT FLEXIBLE DUCTS IN STRICT ACCORDANCE WITH MANUFACTURER'S INSTRUCTIONS.

F. FLEXIBLE CONNECTIONS: PROVIDE FLEXIBLE CONNECTOR, VENTFABRICS OR EQUAL, AT ALL MECHANICAL EQUIPMENT CONNECTIONS TO DUCT SYSTEM.

G. PROVIDE REMOVABLE ACCESS PANELS IN CEILINGS AND ACCESS DOORS (WITH AIR TIGHT GASKETS) IN DUCTWORK AS REQUIRED FOR ACCESS TO DAMPERS OR OTHER DUCT MOUNTED EQUIPMENT.

2.3 AIR DISTRIBUTION

A. DIFFUSERS AND REGISTERS: MODELS AS SCHEDULED ON THE DRAWINGS. MANUFACTURERS INDICATED ARE INTENDED TO ESTABLISH THE QUALITY AND TYPE OF EQUIPMENT DESIRED. COMPARABLE EQUIPMENT WILL BE CONSIDERED FOR APPROVAL BY THE ENGINEER. INCLUDE FINISH AND ACCESSORIES AS INDICATED.

B. LOUVERS: MODELS AS SCHEDULED ON THE DRAWINGS OR EQUAL.

2.4 PIPING

A. REFRIGERANT PIPING: TYPE ACR COPPER WITH WROUGHT COPPER FITTINGS AND BRAZED JOINTS. SIZE & INSTALL IN STRICT ACCORDANCE W/ REFRIGERATION EQUIPMENT MANUFACTURER RECOMMENDATIONS.

B. REFRIGERANT ACCESSORIES: PROVIDE FOR EACH REFRIGERANT CIRCUIT:
1. SIGHT GLASS WITH MOISTURE INDICATOR, FILTER DRYER, SOLENOID VALVE AND EXPANSION VALVE.
2. GAUGES, CHARGING VALVES, RELIEF VALVES, LOW LIMIT CONTROLS, AND SPECIALTIES REQUIRED FOR A COMPLETE AND SAFE INSTALLATION.
3. ALL ACCESSORIES AS RECOMMENDED BY THE REFRIGERATION EQUIPMENT MANUFACTURER.
4. VALVES AND SPECIALTIES SHALL BE AS MADE BY MUELLER, HENRY, ALCO, OR EQUAL.

C. CONDENSATE PIPING: SCH 40 PVC W/ SOLVENT WELD JOINTS. PROVIDE TRAP AT COOLING COIL DRAIN CONNECTION. PROVIDE CLEANOUTS AT CHANGE IN DIRECTION. EXTEND CONDENSATE PIPING TO APPROVED DISCHARGE LOCATION.

2.5 INSULATION

A. DUCT INSULATION: R-8 MINIMUM, 2" FIBERGLASS BLANKET INSULATION, ASTM C553, TYPE II, 0.75 PCF CLASS F-1, ASTM 84E FLAME SPREAD/SMOKE DEVELOPED RATING LESS THAN 25/50. PROVIDE WITH FACTORY APPLIED ALL-PURPOSE, LAMINATED GLASS-FIBER-REINFORCED, FLAME-RETARDANT KRAFT PAPER AND ALUMINUM FOIL JACKET. INSTALL ON ALL CONCEALED HVAC SUPPLY, RETURN, MAKE-UP AIR DUCTS AND PLENUMS.

B. REFRIGERANT PIPING INSULATION: ELASTOMERIC CLOSED CELL PIPE INSULATION, ARMAFLEX AP OR EQUAL, 1½" THICK. PROTECT ALL EXTERIOR, EXPOSED PIPE INSULATION WITH ARMAFLEX WB FINISH.

C. CONDENSATE DRAIN PIPING INSULATION: ELASTOMERIC CLOSED CELL PIPE INSULATION, ARMAFLEX AP OR EQUAL, 1/2" THICK. PROTECT ALL EXTERIOR, EXPOSED PIPE INSULATION WITH ARMAFLEX WB FINISH.

2.6 CONTROLS

A. TEMPERATURE CONTROLS: SEE DRAWING SCHEDULES AND DETAILS.

B. TOILET EXHAUST: SEE DRAWING SCHEDULES AND DETAILS.

2.7 SUPPORTS

A. HANGERS, SUPPORTS, AND ANCHORS: SUPPORT AND FASTEN ALL DUCTWORK, PIPING, EQUIPMENT, ETC., SECURELY IN PLACE USING APPROVED STEEL HANGERS AND FASTENERS. CHAIN, STRAP, PERFORATED STRAP, WIRE HANGERS, OR WOOD PLUGS ARE PROHIBITED.

B. INCLUDE STEEL SUPPORTS, ANCHORS, FRAMES, BRACING, PLATES, BOLTS, NUTS, WASHERS, ETC. INCIDENTAL TO INSTALLATION OF WORK.

C. PROVIDE AUXILIARY STRUCTURAL MEMBERS WHERE REQUIRED BETWEEN MEMBERS OF THE STRUCTURE.

2.8 REFRIGERANT: FURNISH A FULL CHARGE OF REFRIGERANT FOR EACH SYSTEM AND MAINTAIN THE CHARGE FOR A PERIOD OF ONE YEAR FROM DATE OF ACCEPTANCE AND REPLACE ANY THAT MAY BE LOST (UNLESS LOSS IS DETERMINED TO BE CAUSED BY THE OWNER).

PART 3 EXECUTION

3.1 PREPARATION: REVIEW CONSTRUCTION DOCUMENTS AND VERIFY ARRANGEMENT WITH FIELD CONDITIONS. COORDINATE PROPOSED MECHANICAL EQUIPMENT AND SYSTEMS WITH ASSOCIATED WORK OF OTHER TRADES.

3.2 INSTALLATION: INSTALL ALL MECHANICAL WORK IN ACCORDANCE WITH CODE, MANUFACTURER'S RECOMMENDATIONS AND GOOD INDUSTRY PRACTICE. ARRANGE WORK TO ALLOW EASY ACCESS TO EQUIPMENT FOR SERVICE AND MAINTENANCE.

3.3 DUCTWORK: LAYOUT DUCTWORK TO AVOID INTERFERENCES AND MAXIMIZE USABLE SPACE IN THE BUILDING.

3.6 PIPING: ROUTE PIPING NEATLY, PARALLEL TO BUILDING WALLS. WHERE REQUIRED, SLOPE PIPING FOR PROPER DRAINAGE.

3.7 DUCT INSULATION: INSTALL BLANKET INSULATION TIGHT AND SMOOTH. OVERLAP JOINTS 3 INCHES. SEAL JOINTS, BREAKS, AND PUNCTURES WITH VAPOR BARRIER COMPOUND.

3.8 PIPING INSULATION: INSTALL INSULATION NEATLY. APPLY ADHESIVE TO BOTH FACES OF JOINT TO OBTAIN FULLY ADHERED, VAPOR TIGHT INSTALLATION. FINISH ALL INSULATION EXPOSED TO WEATHER WITH MANUFACTURE APPROVED WEATHERPROOF COATING.

3.9 CONTROLS: INSTALL AND WIRE ALL CONTROLS COMPLETE TO OBTAIN INTENDED SEQUENCE OF OPERATION.

3.10 HANGERS AND SUPPORTS: HANG AND SUPPORT EQUIPMENT, DUCTS AND PIPING IN A SUBSTANTIAL MANNER FROM THE BUILDING STRUCTURE. SPACE HANGERS IN ACCORDANCE WITH CODE AND SO AS TO AVOID EXCESS DEFLECTION OR SAG. PROVIDE SEISMIC DESIGN HANGERS WHERE REQUIRED. NO PORTION OF THE STRUCTURE SHALL BE OVER STRESSED BY THE HANGING OPERATION OR BY THE FINAL SUPPORTS. ATTACHMENTS DEEMED INADEQUATE BY THE ENGINEER SHALL BE REWORKED AS DIRECTED. PROVIDE VIBRATION ISOLATION FOR MOVING MACHINERY.

3.11 REFRIGERANT PIPING TESTS: PLACE REFRIGERANT PIPING UNDER A TEST PRESSURE USING ANHYDROUS CARBON DIOXIDE OR NITROGEN BEFORE DEHYDRATING WITH A VACUUM PUMP TO A VACUUM OF 26 INCHES HG. SEE CONDENSING UNIT, COMPRESSOR OR COMPRESSOR UNIT NAME PLATE FOR TEST PRESSURES. MAINTAIN VACUUM FOR A MINIMUM OF 24 HOURS. REFRIGERATION COMPRESSOR SHALL NOT BE USED FOR THIS PURPOSE. AFTER SYSTEM IS VACUUM TESTED, CHARGE WITH SYSTEM REFRIGERANT AND LEAK TEST ENTIRE CIRCUIT WITH ELECTRONIC TESTER.

3.12 LABELS: LABEL ALL EQUIPMENT AND DEVICES WITH BAKELITE ENGRAVED PLATES SCREWED IN PLACE. "TAPEWRITER" AND ADHESIVE LABELS ARE UNACCEPTABLE.

3.13 START-UP: VERIFY INSTALLATION IS COMPLETE AND READY FOR START-UP. START-UP ALL EQUIPMENT IN STRICT ACCORDANCE WITH MANUFACTURER'S RECOMMENDATIONS USING FACTORY CERTIFIED MECHANICS. AFTER START-UP, VERIFY AND DOCUMENT THAT EQUIPMENT IS OPERATING PROPERLY WITHIN MANUFACTURER'S SPECIFIED TOLERANCES.

3.14 TESTING AND BALANCING: BALANCE AIR FLOWS TO OBTAIN AIR QUANTITIES SHOWN ON DRAWINGS. ADJUST DAMPERS FOR ALL AIR OUTLETS AND RECORD VELOMETER READINGS WHICH CORRESPOND TO DESIGN FLOW RATES AT EACH OUTLET. RECORD DESIGN AND FINAL READINGS ON APPROVED FORMS. SUBMIT TWO COPIES FOR REVIEW AND APPROVAL BY ENGINEER. UPON COMPLETION OF ALL BALANCING AND TESTING, SCHEDULE A TIME FOR ENGINEER TO PERFORM RANDOM CHECKING OF TYPICAL OUTLETS. CONTRACTOR SHALL PROVIDE TECHNICIANS AND MEASURING DEVICES FOR THIS TESTING.

3.15 COMMISSIONING: DEMONSTRATE AND DOCUMENT OPERATION OF ALL MECHANICAL SYSTEMS INSTALLED UNDER THIS CONTRACT IN THE PRESENCE OF THE ENGINEER. INCLUDE ALL TESTS, TRIAL OPERATIONS, ETC. AS REQUIRED TO PROVE THAT ALL SYSTEMS ARE IN COMPLETE SERVICEABLE CONDITION AND WILL FUNCTION AS INTENDED. ALL COSTS OF COMMISSIONING SHALL BE BORNE BY THIS CONTRACTOR.

3.16 TRAINING: TRAIN OWNER PERSONNEL IN THE PROPER OPERATION AND MAINTENANCE OF MECHANICAL SYSTEMS. PROVIDE WRITTEN DOCUMENTATION INCLUDING NAMES OF OWNER PERSONNEL ATTENDING TRAINING.

3.17 CLEAN-UP: CLEAN ALL EQUIPMENT AND DEVICES AND INSTALL NEW FILTERS IN EQUIPMENT IMMEDIATELY PRIOR TO OWNER ACCEPTANCE AND OCCUPANCY.

MECHANICAL SUMMARY

MECHANICAL SYSTEMS, SERVICE SYSTEMS AND EQUIPMENT	
CLIMATE ZONE	3A - WARM/HUMID
WINTER DRY BULB:	23°F
SUMMER DRY BULB	95°F
INTERIOR DESIGN CONDITIONS	
WINTER DRY BULB	70°DF
SUMMER DRY BULB	75°F
RELATIVE HUMIDITY	60°RH*
	*DESIGN- NOT CONTROLLED
BUILDING HEATING LOAD:	89.1 MBH
BUILDING COOLING LOAD:	113.8 MBH
MECHANICAL SPACING CONDITIONING SYSTEM	
UNITARY	
DESCRIPTION OF UNIT:	SEE SCHEDULES
HEATING EFFICIENCY:	SEE SCHEDULES
COOLING EFFICIENCY:	SEE SCHEDULES
SIZE CATEGORY OF UNIT:	SEE SCHEDULES
BOILER	
SIZE CATEGORY, IF OVERSIZED STATE REASON:	N/A
CHILLER	
SIZE CATEGORY, IF OVERSIZED STATE REASON:	N/A
LIST EQUIPMENT EFFICIENCIES:	SEE SCHEDULES

MECHANICAL LEGEND

DAHU#	DUCTLESS AIR HANDLING UNIT NUMBER
DCU#	DUCTLESS CONDENSING UNIT NUMBER
DX#	COOLING COIL UNIT NUMBER
GF#	GAS FURNACE UNIT NUMBER
HP#	HEAT PUMP UNIT NUMBER
PV#	POWER VENTILATOR NUMBER
R#	RETURN GRILLE NUMBER
RPM	ROTATIONS PER MINUTE
S#	SUPPLY DIFFUSER NUMBER
Ⓣ	THERMOSTAT
⊠	SUPPLY DIFFUSER
◪	RETURN GRILLE
└─	MANUAL VOLUME DAMPER
M──	MOTORIZED DAMPER
──── C ────	CONDENSATE PIPING
──── R ────	REFRIGERANT PIPING
S/R – AIR TYPE DESIGNATOR / CFM VALUE	DIFFUSER/GRILLE TAG

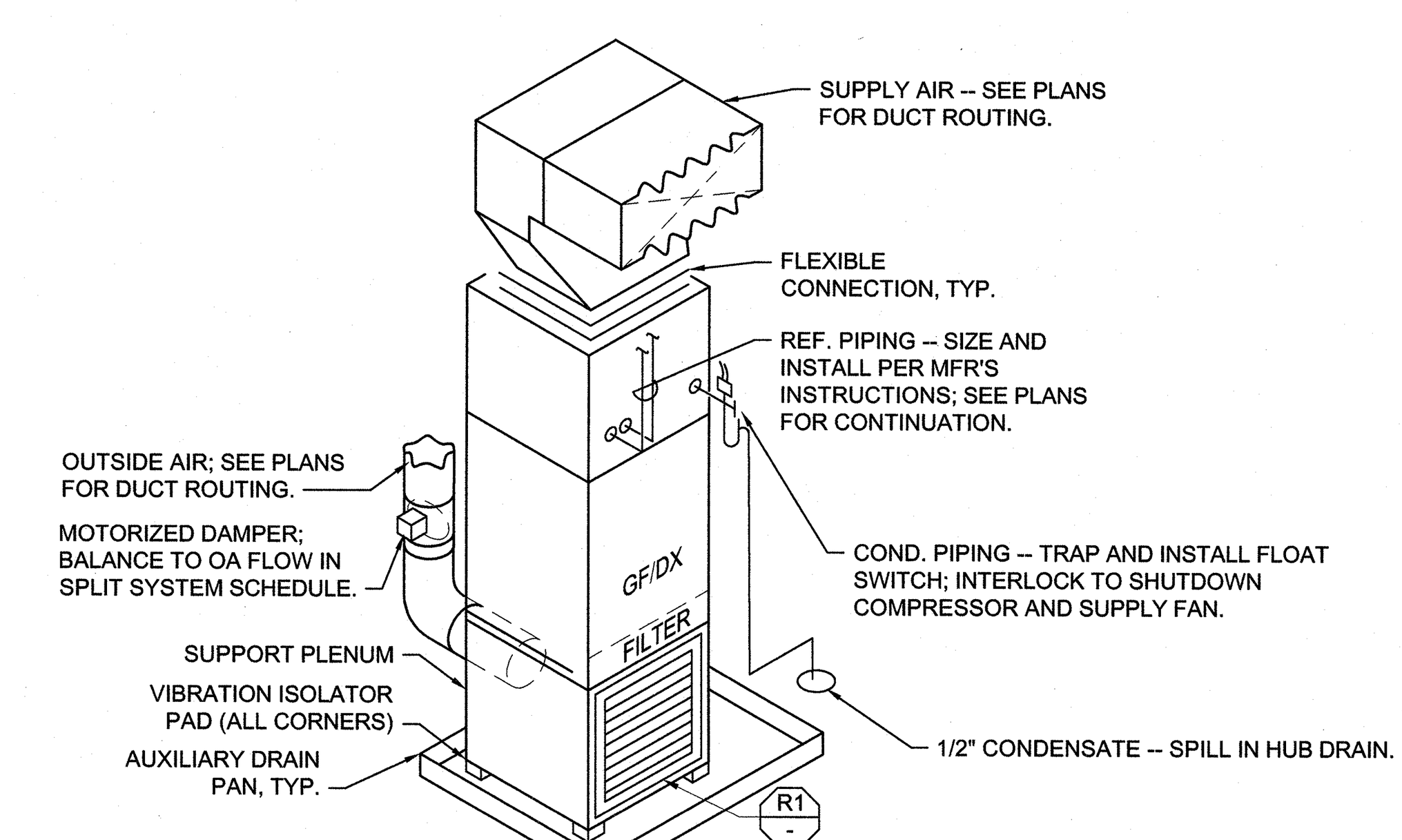

1 / M001 **GF1/DX1 SPLIT SYSTEM DETAIL**
Not To Scale

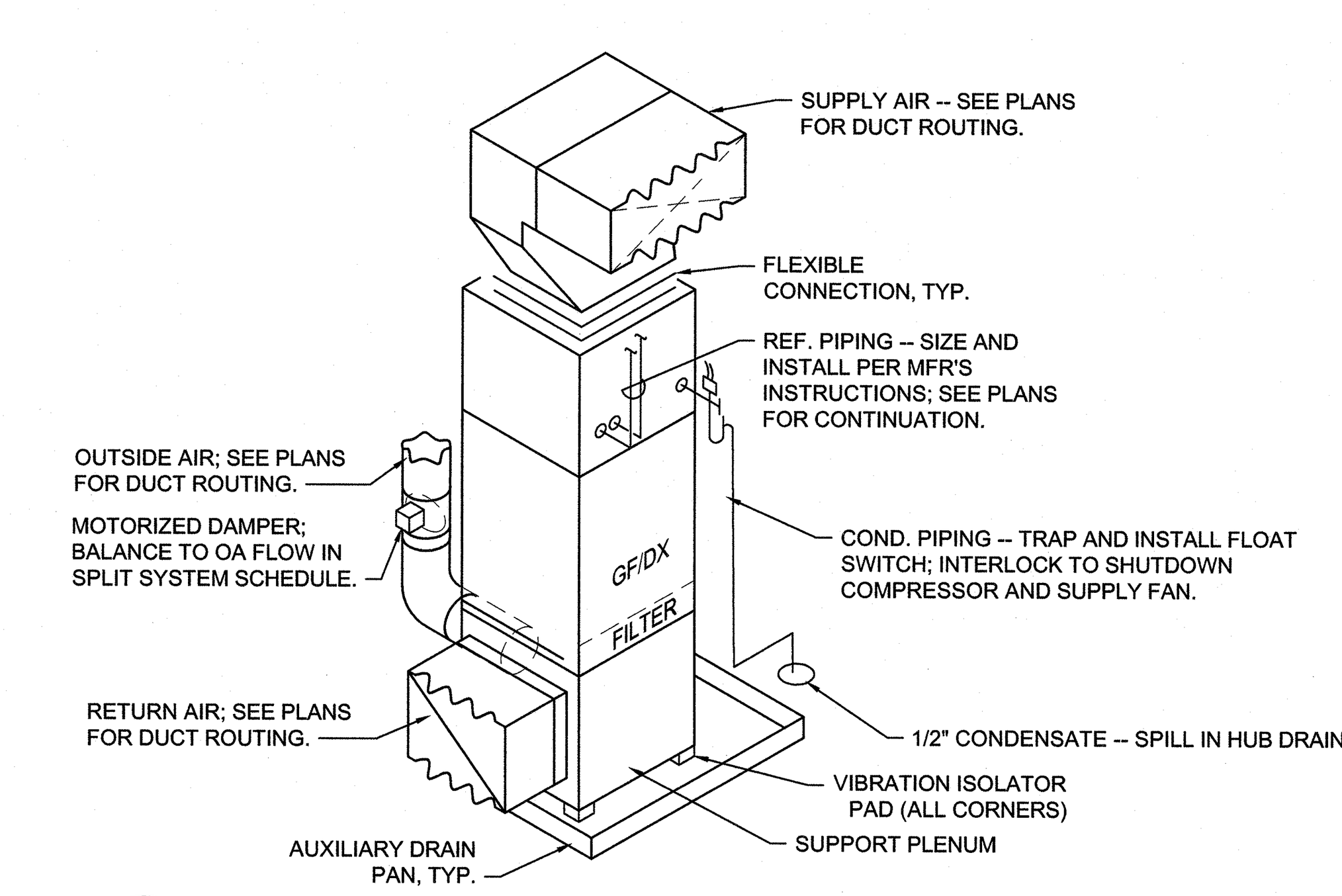

2 / M001 **GF2/DX2, GF3/DX3, GF4/DX4 SPLIT SYSTEM DETAIL**
Not To Scale

BOWMAN MURRAY HEMINGWAY
ARCHITECTS
514 Market Street
Wilmington, NC 28401
Tel - (910) 762-2621
Fax - (910) 762-8506

NORTH CAROLINA PROFESSIONAL ENGINEER SEAL 10592 JAMES R. BENSON, III 7/20/20

THE DAVIS COMMUNITY Central Services Center

1011 Porter's Neck Road
Wilmington, North Carolina 28411

REV.	DATE	DESCRIPTION

NO.	DATE	ISSUE NOTE
	7-20-2020	PERMIT SET

Project Manager: JRB	Drawn By: CRG
Date: July 20, 2020	Reviewed By: JRB
Project ID: CBHF: 20060	

Sheet Title: HVAC SPECIFICATIONS, NOTES, LEGEND, DETAILS AND SUMMARY

Sheet No.: M001

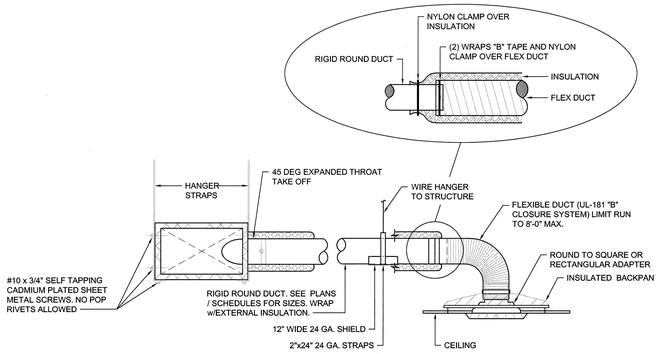

1 M002 **DIFFUSER CONNECTION DETAIL**
Not To Scale

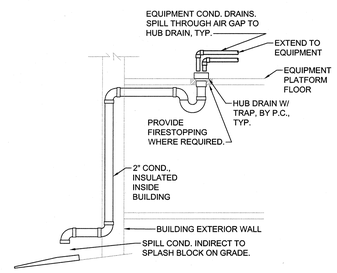

2 M002 **CONDENSATE DRAIN DETAIL**
Not To Scale

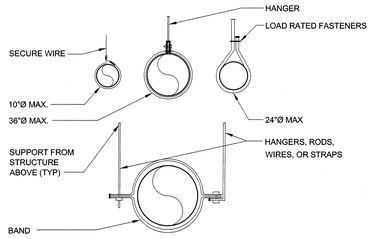

3 M002 **ROUND DUCT SUPPORT DETAIL**
Not To Scale

NOTE:
1. MESH SHALL BE FURNISHED IN SHEETS.
2. ALL PAD EDGES SHALL BE CHAMFERED.
3. CONCRETE COMPRESSIVE STRENGTH SHALL BE 3,000 PSI AT 28 DAYS
4. ONLY ANCHOR EQUIPMENT WITH MANUFACTURER SUPPLIED ANCHOR MOUNTS

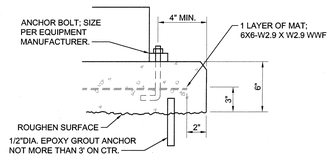

4 M002 **EQUIPMENT PAD DETAIL**
Not To Scale

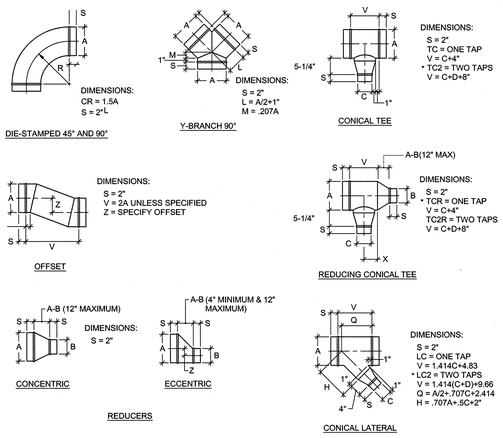

5 M002 **ROUND DUCT FITTING DETAILS**
Not To Scale

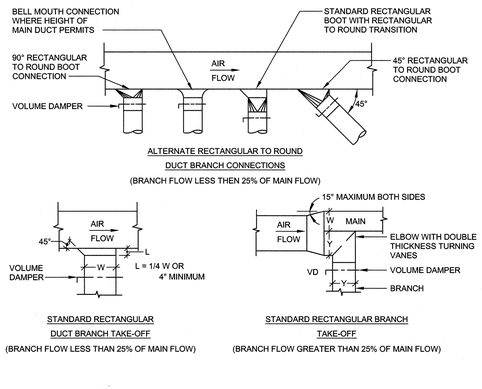

6 M002 **ROUND/RECT. DUCT TAKE-OFF FITTING DETAILS**
Not To Scale

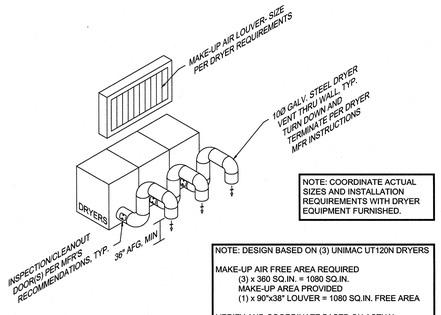

NOTE: COORDINATE ACTUAL SIZES AND INSTALLATION REQUIREMENTS WITH DRYER EQUIPMENT FURNISHED.

NOTE: DESIGN BASED ON (3) UNIMAC UT120N DRYERS

MAKE-UP AIR FREE AREA REQUIRED
(3) x 360 SQ.IN. = 1080 SQ.IN.
MAKE-UP AREA PROVIDED
(1) x 90"x38" LOUVER = 1080 SQ.IN. FREE AREA

VERIFY AND COORDINATE BASED ON ACTUAL EQUIPMENT INSTALLED

7 M002 **DRYER INSTALLATION DETAIL**
Not To Scale

PACKAGED DEHUMIDIFIER SCHEDULE

DRAWING CODE	DESIGN BASIS MANUFACTURER	ALTERNATE APPROVED MANUFACTURERS	MODEL	DEHUMID. CAPACITY @ 80°F/60%RH (PINTS/DAY)	INDOOR SECTION FAN SA (CFM)	FAN OA (CFM)	FAN ESP (IN H2O)	ELECTRICAL (SINGLE POINT) VOLTAGE (V/PH/HZ)	MCA (AMPS)	MOCP (AMPS)	WEIGHT (LBS)	NOTES	ACCESSORIES
D1	ULTRA-AIRE	NOVELAIRE, BRY-AIR	XT205H	205.0	495	-	0.20	120/1/60	13.2	20	140	1	A
NOTES: 1 REFER TO SPECIFICATIONS SHEET M001.													
ACCESSORIES A MATCHING DEH3000 WALL MOUNT HUMIDITY CONTROL.													

DIFFUSERS, REGISTERS AND GRILLES SCHEDULE

DRAWING CODE	BASIS OF DESIGN MANUFACTURER	BASIS OF DESIGN MODEL	ALTERNATE APPROVED MANUFACTURERS	TYPE	SERVICE	NECK SIZE (IN.)	MODULE SIZE (IN.)	MATERIAL	FINISH	MOUNTING	NOTES	ACCESSORIES
S1	PRICE	ASCD	METALAIRE, TITUS	SQUARE CEILING DIFFUSER	SUPPLY	6Ø	24 X 24	ALUMINUM	WHITE	T-BAR	1,2	A
S2	PRICE	ASCD	METALAIRE, TITUS	SQUARE CEILING DIFFUSER	SUPPLY	8Ø	24 X 24	ALUMINUM	WHITE	T-BAR	1,2	A
S3	PRICE	ASCD	METALAIRE, TITUS	SQUARE CEILING DIFFUSER	SUPPLY	6Ø	12 X 12	ALUMINUM	WHITE	CEILING SURFACE	1,2	A
S4	PRICE	620D	METALAIRE, TITUS	DOUBLE DEFLECTION LOUVER FACE GRILLE	SUPPLY	8 X 6	-	ALUMINUM	WHITE	WALL SURFACE	1,2	A
S5	PRICE	620D	METALAIRE, TITUS	DOUBLE DEFLECTION LOUVER FACE GRILLE	SUPPLY	8 X 6	-	ALUMINUM	WHITE	DUCT SURFACE	1,2	A
S6	PRICE	620D	METALAIRE, TITUS	DOUBLE DEFLECTION LOUVER FACE GRILLE	SUPPLY	10 X 6	-	ALUMINUM	WHITE	DUCT SURFACE	1,2	A
S7	PRICE	620D	METALAIRE, TITUS	DOUBLE DEFLECTION LOUVER FACE GRILLE	SUPPLY	14 X 8	-	ALUMINUM	WHITE	DUCT SURFACE	1,2	A
S8	PRICE	620D	METALAIRE, TITUS	DOUBLE DEFLECTION LOUVER FACE GRILLE	SUPPLY	22 X 10	-	ALUMINUM	WHITE	DUCT SURFACE	1,2	A
R1	PRICE	630	METALAIRE, TITUS	FIXED FACE GRILLE	RETURN	22 X 22	-	ALUMINUM	BARE	DUCT SURFACE	1	-
R2	PRICE	630	METALAIRE, TITUS	FIXED FACE GRILLE	RETURN	20 X 20	24 X 24	ALUMINUM	WHITE	T-BAR	1	-
R3	PRICE	630	METALAIRE, TITUS	FIXED FACE GRILLE	RETURN	24 X 20	-	ALUMINUM	WHITE	WALL SURFACE	1	-
R4	PRICE	630	METALAIRE, TITUS	FIXED FACE GRILLE	RETURN	16 X 16	-	ALUMINUM	WHITE	WALL SURFACE	1	-
NOTES: 1 REFER TO SPECIFICATIONS SHEET M001.												
2 DUCT BRANCH CONNECTION SIZE TO BE EQUAL TO THE NECK SIZE OF DIFFUSER UNLESS NOTED OTHERWISE ON PLANS.												
ACCESSORIES: A VOLUME DAMPER												

POWER VENTILATOR SCHEDULE

DRAWING CODE	BASIS OF DESIGN MANUFACTURER	BASIS OF DESIGN MODEL	ALTERNATE APPROVED MANUFACTURERS	FAN TYPE	SERVICE	CAPACITIES AIRFLOW (CFM)	ESP (IN. WG.)	DRIVE ARRANGEMENT	FAN RPM	ELECTRICAL MOTOR TYPE	MOTOR SIZE (W)	V/PH/HZ	FLA	MOCP	SONES	WEIGHT (LBS.)	NOTES	ACCESSORIES
PV1	GREENHECK	SP-A125	TWIN CITY, PENNBARRY	CEILING-MOUNTED VENTILATORS	EXHAUST	100	0.25	DIRECT	1,053	PSC	18	115/1/60	0.6	15	0.5	17	1,3	A,B
PV2	GREENHECK	SP-A125	TWIN CITY, PENNBARRY	CEILING-MOUNTED VENTILATORS	EXHAUST	100	0.25	DIRECT	1,053	PSC	18	115/1/60	0.6	15	0.5	17	1,3	A,B
PV3	GREENHECK	SP-A190	TWIN CITY, PENNBARRY	IN-LINE CENTRIFUGAL FANS	EXHAUST	115	0.25	DIRECT	1,104	PSC	22	115/1/60	1.3	15	0.7	17	1,2	A,B
PV4	GREENHECK	SP-A125	TWIN CITY, PENNBARRY	CEILING-MOUNTED VENTILATORS	EXHAUST	80	0.30	DIRECT	1,050	PSC	18	115/1/60	0.2	15	0.9	17	1,2	A,B
PV5	GREENHECK	SP-A125	TWIN CITY, PENNBARRY	CEILING-MOUNTED VENTILATORS	EXHAUST	80	0.30	DIRECT	1,050	PSC	18	115/1/60	0.2	15	0.9	17	1,2	A,B
NOTES: 1 REFER TO SPECIFICATIONS SHEET M001.																		
2 FAN TO RUN CONTINUOUSLY.																		
3 CONTROLLED V/A OCCUPANCY SENSOR. REFER TO ELECTRICAL PLANS.																		
ACCESSORIES: A UNIT MOUNTED SPEED CONTROLLER																		
B GRAVITY DAMPER																		

LOUVER SCHEDULE

DRAWING CODE	BASIS OF DESIGN MANUFACTURER	BASIS OF DESIGN MODEL	ALTERNATE APPROVED MANUFACTURERS	TYPE	FRAME	DESCRIPTION	MATERIAL	LOUVER DEPTH (IN.)	SIZE (W x H) (IN.)	SERVICE	AIRFLOW (CFM)	PERFORMANCE RATINGS FREE AREA (SF)	S.P. LOSS (IN. H20)	WATER PENETRATION (OZ./SF)	NOTES	ACCESSORIES
L1	RUSKIN	EME6325D	GREENHECK, POTTORFF	FIXED	CHANNEL	VERTICAL, WIND-DRIVEN-RAIN-RESISTANT	ALUMINUM	6	90x38	INTAKE	4,200	7.50	N/A	0.00	1,2,3	-
L2	RUSKIN	EME6325D	GREENHECK, POTTORFF	FIXED	CHANNEL	VERTICAL, WIND-DRIVEN-RAIN-RESISTANT	ALUMINUM	6	38x38	INTAKE	660	3.86	0.02	0.00	1,2	-
L3	RUSKIN	EME6325D	GREENHECK, POTTORFF	FIXED	CHANNEL	VERTICAL, WIND-DRIVEN-RAIN-RESISTANT	ALUMINUM	6	38x38	EXHAUST	660	3.86	0.02	0.00	1,2	-
NOTES: 1. REFER TO SPECIFICATIONS SHEET M001.																
2. FINISH AS SELECTED BY ARCHITECT FROM MANUFACTURER'S FULL RANGE OF COLOR AND GLOSS.																
3. LOUVER FREE AREA TO MEET SCHEDULED VALUE TO COMPLY WITH DRYER INSTALLATION REQUIREMENTS.																
ACCESSORIES:																

SPLIT SYSTEM SCHEDULE

DRAWING CODE (GAS FURNACE/ COOLING COIL/ OUTDOOR UNIT)	DESIGN BASIS MFR	MODEL INDOOR UNIT	MODEL COOLING COIL	MODEL OUTDOOR UNIT	ALTERNATE APPROVED MFRS	ARI COOLING 80/67/95 TOTAL (MBH)	SENS (MBH)	HEATING (HEAT PUMP) TOTAL (MBH)	EFFICIENTY	HEATING (NATGAS) INPUT (MBH)	OUTPUT (MBH)	MIN SEER	INDOOR UNIT FAN SA (CFM)	OA (CFM)	ESP (IN H2O)	ELECTRICAL (SINGLE POINT) VOLTAGE (V/PH/HZ)	FLA (AMPS)	MOCP (AMPS)	WEIGHT (LBS)	OUTDOOR UNIT ELECTRICAL VOLTAGE (V/PH/HZ)	MCA (AMPS)	MOCP (AMPS)	WEIGHT (LBS)	NOTES	ACCESSORIES
GF1/DX1/HP1	RHEEM	R96VA0852521MSB	RCF4821MTA	RP1648AJ2NA	TRANE, YORK	49.8	38.0	45.5	COP 3.7	84.0	82.0	15.0	1,600	140	0.50	115/1/60	8.8	15	212	208/1/60	31.0	50	257	1,2,3	A,B,C
GF2/DX2/HP2	RHEEM	R96VA0402317MSA	RCF2417STAM	RP1524BJ1NA	TRANE, YORK	26.1	18.3	11.5	COP 3.6	42.0	41.0	15.0	800	80	0.50	115/1/60	5.9	15	162	208/1/60	15.0	25	152	1	A,B,C
GF3/DX3/HP3	RHEEM	R96VA0852521MSB	RCF4821MTA	RP1648AJ2NA	TRANE, YORK	49.8	38.0	45.5	COP 3.7	84.0	82.0	15.0	1,440	270	0.50	115/1/60	8.8	15	212	208/1/60	31.0	50	257	1	A,B,C
GF4/DX4/HP4	RHEEM	R96VA0602317MSA	RCF3621MTA	RP1636AJ2NA	TRANE, YORK	39.4	29.3	34.6	COP 3.6	56.0	55.0	15.0	1,200	170	0.50	115/1/60	5.1	15	194	208/1/60	25.0	40	199	1	A,B,C
NOTES: 1 REFER TO SPECIFICATIONS SHEET M001.																									
2 FILTER VELOCITY NOT TO EXCEED 350 FPM																									
3 IF AN ALTERNATE MANUFACTURER'S EQUIPMENT IS SELECTED, MECHANICAL CONTRACTOR SHALL BE RESPONSIBLE FOR VERIFYING THAT THE EQUIPMENT WILL FIT AND ELECTRICAL/CONTROLS REQUIREMENTS MATCH PROPOSED EQUIPMENT.																									
ACCESSORIES: A PROGRAMMABLE SETBACK AUTOCHANGEOVER HEAT-COOL THERMOSTAT.																									
B MERV 8 FILTER RACK																									
C PVC FLUE VENT AND COMBUSTION AIR INTAKE THROUGH ROOF PER MANUFACTURER RECOMMENDATIONS. INCLUDE MATCHING ROOF TERMINALS.																									

MINI-SPLIT SYSTEM SCHEDULE

DRAWING CODE (INDOOR)	DRAWING CODE (OUTDOOR)	BASIS OF DESIGN MANUFACTURER	BASIS OF DESIGN MODEL INDOOR UNIT	INDOOR UNIT CONFIGURATION	BASIS OF DESIGN MODEL OUTDOOR UNIT	ALTERNATE APPROVED MANUFACTURERS	SYSTEM TYPE	ARI COOLING 80/67/95 TOTAL (MBH)	SENS (MBH)	ARI HEATING 70/47 TOTAL (MBH)	MIN SEER	MIN COP	INDOOR UNIT FAN SA MIN-MAX (CFM)	ELECTRICAL VOLTAGE (V/PH/HZ)	MCA (AMPS)	WEIGHT (LBS)	OUTDOOR UNIT ELECTRICAL VOLTAGE (V/PH/HZ)	MCA (AMPS)	MOCP (AMPS)	WEIGHT (LBS)	NOTES	ACCESSORIES
DAH1.1		MITSUBISHI	MSZ-GL12NA	WALL MOUNTED		DAIKIN, LG	HEAT PUMP	11.4	8.7	11.3	19.0	3.9	145-399	208/1/60	1.0	22					1,2	A,B,C,D
DAH1.2	DHP1	MITSUBISHI	MSZ-GL09NA	WALL MOUNTED	MXZ-3C30NA2	DAIKIN, LG	HEAT PUMP	8.6	7.9	8.6	19.0	3.9	145-399	208/1/60	1.0	22	208/1/60	22.1	25	137	1,2	A,B,C,D
DAH1.3		MITSUBISHI	SLZ-KF09NA	CEILING CASSETTE - 4 WAY		DAIKIN, LG	HEAT PUMP	8.5	7.2	8.6	19.0	3.9	212-311	208/1/60	1.0	41					1,2	A,B,C
DAH2.1		MITSUBISHI	MSZ-GL12NA	WALL MOUNTED		DAIKIN, LG	HEAT PUMP	11.4	8.7	11.3	19.0	3.9	145-399	208/1/60	1.0	22					1,2	A,B,C,D
DAH2.2	DHP2	MITSUBISHI	SLZ-KF09NA	CEILING CASSETTE - 4 WAY	MXZ-3C30NA2	DAIKIN, LG	HEAT PUMP	8.5	7.7	8.6	19.0	3.9	230-300	208/1/60	1.0	31	208/1/60	22.1	25	137	1,2	A,B,C
DAH2.3		MITSUBISHI	MLZ-KP09NA	CEILING CASSETTE - 1 WAY		DAIKIN, LG	HEAT PUMP	8.5	7.2	8.6	19.0	3.9	212-311	208/1/60	1.0	41					1,2	A,B,C
NOTES: 1 REFER TO SPECIFICATIONS SHEET M001.																						
2 ELECTRICAL CONTRACTOR TO PROVIDE CONDUIT AND CONDUCTOR FROM OUTDOOR UNIT TO INDOOR UNIT.																						
ACCESSORIES: A WIRED WALL-MOUNTED REMOTE CONTROLLER																						
B CONCRETE MOUNTING PAD FOR OUTDOOR UNIT																						
C SEACOAST COATING PROTECTION ON OUTDOOR UNIT.																						
D ASPEN MINI WHITE CONDENSATE PUMP AND RESERVOIR OR EQUAL WITH CAPACITY OF 1.6 GAL/HR AT 33 FT OF HEAD. INTERLOCK TO SHUTDOWN UNIT.																						

CBHF Engineers, PLLC
2246 Yaupon Drive
Wilmington, NC 28401
Phone: 910.791.4000
Fax: 910.791.5266
www.cbhfengineers.com
NC# P-0506

© Copyright 2020CBHF Engineers, PLLC

BOWMAN MURRAY HEMINGWAY
ARCHITECTS
514 Market Street
Wilmington, NC 28401
Tel - (910) 762-2621
Fax - (910) 762-8506

NORTH CAROLINA PROFESSIONAL ENGINEER SEAL 10592 JAMES R. BENSON, II

THE DAVIS COMMUNITY
Central Services Center
1011 Porter's Neck Road
Wilmington, North Carolina 28411

REV.	DATE	DESCRIPTION
	7-20-2020	PERMIT SET

NO.	DATE	ISSUE NOTE

Project Manager: JRB	Drawn By: CRG
Date: July 20, 2020	Reviewed By: JRB
Project ID: CBHF: 20060	

Sheet Title: HVAC SCHEDULES AND DETAILS

Sheet No.: M002

KEYED NOTES

1. INSTALL UNIT (GF1/DX1) ON A RETURN AIR SUPPORT PLENUM WITH RETURN GRILLE (R1), SEE DETAIL 1/M-001 FOR MORE INFORMATION. ROUTE FLUE VENT AND AIR INTAKE TO ROOF AND INSTALL BEHIND RIDGE - WHILE MAINTAINING MANUFACTURER'S RECOMMENDED CLEARANCES. ROUTE CONDENSATE TO HUB DRAIN.
2. INSTALL UNITS (GF2/DX2, GF3/DX3, AND GF4/DX4) ON A RETURN AIR SUPPORT PLENUM AND ROUTE RETURN AIR DUCTWORK AS INDICATED ON PLAN - SEE DETAIL 2/M001 FOR MORE INFORMATION. ROUTE FLUE VENT AND AIR INTAKE TO ROOF AND INSTALL BEHIND RIDGE - WHILE MAINTAINING MANUFACTURER'S RECOMMENDED CLEARANCES. ROUTE CONDENSATE TO HUB DRAIN.
3. SUSPEND DEHUMIDIFIER (D1) FROM ABOVE - FREE BLOW INTO MEZZANINE AREA. ROUTE CONDENSATE TO HUB DRAIN.
4. INSTALL HUB DRAIN AND ROUTE 2" INSULATED CONDENSATE PIPING OUTSIDE AS SHOWN ON PLAN.
5. ROUTE 2" INSULATED CONDENSATE PIPING AS SHOWN ON PLAN.
6. SPILL CONDENSATE INDIRECT TO SPLASH BLOCK ON GRADE.
7. REFRIGERANT LINESETS.
8. ROUTE DUCTWORK AS HIGH AS PRACTICAL.
9. INSTALL OUTDOOR UNITS ON CONCRETE PAD WHILE MAINTAINING MANUFACTURER'S RECOMMENDED CLEARANCE, TYP.
10. INSTALL DAH1.1 AND DAH2.1 WITH BOTTOM OF UNIT 7' A.F.F.
11. SEE MEZZANINE LEVEL PLAN 2/M101 FOR CONTINUATION.
12. ROUTE DUCTWORK OVER MEZZANINE AS HIGH AS PRACTICAL. TO MAINTAIN WALKING CLEARANCE.

CBHF
Engineers, PLLC
2246 Yaupon Drive
Wilmington, NC 28401
Phone: 910.791.4000
Fax: 910.791.5266
www.cbhfengineers.com
NC# P-0506

© Copyright 2020CBHF Engineers, PLLC

BOWMAN MURRAY HEMINGWAY
ARCHITECTS
514 Market Street
Wilmington, NC 28401
Tel - (910) 762-2621
Fax - (910) 762-8506

NORTH CAROLINA PROFESSIONAL ENGINEER SEAL 40692 JAMES R. BENSON
7/20/20

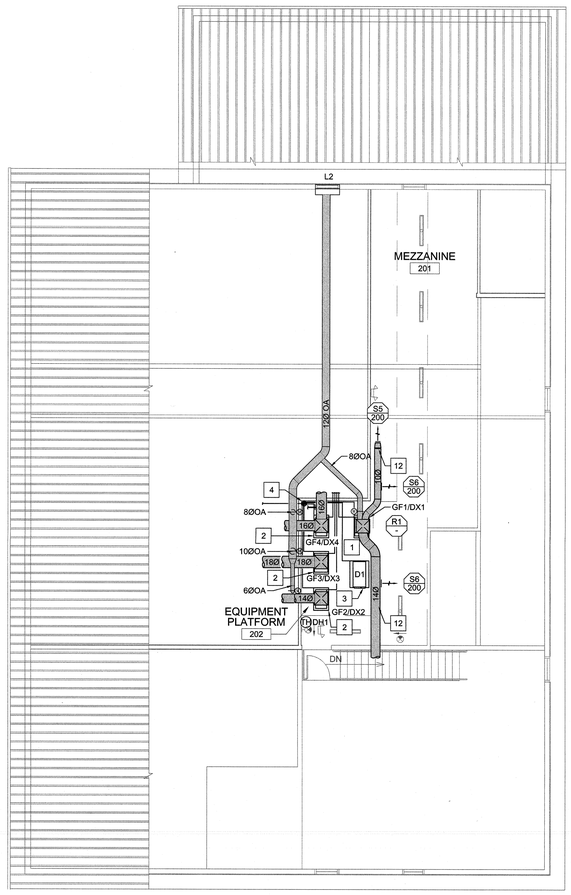

PROJECT NORTH

2 / M101 **MEZZANINE LEVEL PLAN**
scale: 1/8"=1'-0"

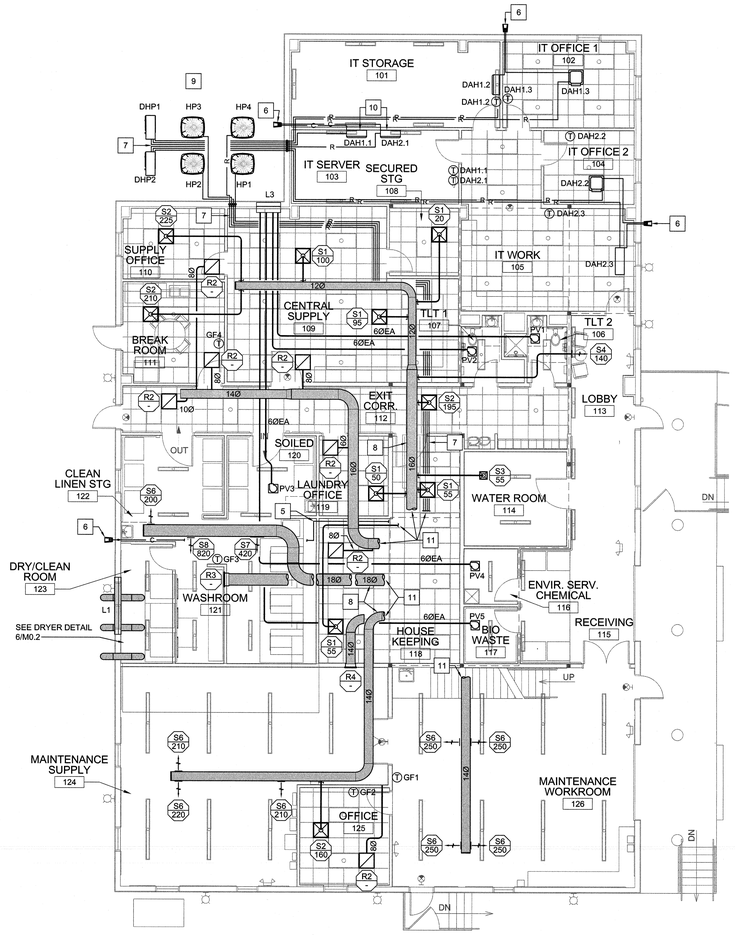

PROJECT NORTH

1 / M101 **FIRST FLOOR PLAN**
scale: 1/8"=1'-0"

THE DAVIS COMMUNITY
Central Services Center
1011 Porter's Neck Road
Wilmington, North Carolina 28411

REV.	DATE	DESCRIPTION

NO.	DATE	ISSUE NOTE
	7-20-2020	PERMIT SET

Project Manager: JRB	Drawn By: CRG
Date: July 20, 2020	Reviewed By: JRB
Project ID: CBHF: 20060	

Sheet Title
HVAC FIRST FLOOR AND MEZZANINE PLANS

Sheet No.
M101

Abbreviations

A	AMPERES
AC	ALTERNATING CURRENT
AFF	ABOVE FINISHED FLOOR
AFG	ABOVE FINISHED GRADE
ALUM	ALUMINUM
AMP	AMPERE
ATS	AUTOMATIC TRANSFER SWITCH
AUTO	AUTOMATIC
AUX	AUXILIARY
AWG	AMERICAN WIRE GAUGE
BLDG	BUILDING
C	CONDUIT
CB	CIRCUIT BREAKER
CFM	CUBIC FEET PER MINUTE
CKT	CIRCUIT
CLF	CURRENT LIMITING FUSE
CLG	CEILING
CPT	CONTROL POWER TRANSFORMER
CR	CONTROL RELAY
CS	CONTROL SWITCH
CT	CURRENT TRANSFORMER
CU	COPPER
DC	DIRECT CURRENT
DI	DOOR INTERLOCK
DN	DOWN
E	EXISTING
EC	ELECTRICAL CONTRACTOR
EG	EQUIPMENT GROUND
ELECT	ELECTRICAL
ELEV	ELEVATION
EM	EMERGENCY
ENCL	ENCLOSURE
EQUIP	EQUIPMENT
EWC	ELECTRIC WATER COOLER
EWH	ELECTRIC WATER HEATER
FLEX	FLEXIBLE
GALV	GALVANIZED
GC	GENERAL CONTRACTOR
GEN	GENERATOR
GFI	GROUND FAULT INTERRUPTING
G, GRD	GROUND
GRS	GALVANIZED RIGID STEEL
HDSS	HEAVY DUTY SAFETY SWITCH
HID	HIGH INTENSITY DISCHARGE
HP	HORSEPOWER
HPS	HIGH PRESSURE SODIUM
HT	HEIGHT
HZ	HERTZ
IDU	INDOOR UNIT
INST	INSTANTANEOUS
INSTR	INSTRUMENT
KEC	KITCHEN EQUIPMENT CONTRACTOR
LA	LIGHTNING ARRESTOR
MC	MECHANICAL CONTRACTOR
MCC	MOTOR CONTROL CENTER
MECH	MECHANICAL
MFR	MANUFACTURER
MH	METAL HALIDE
MTD	MOUNTED
MTG	MOUNTING
NC	NORMALLY CLOSED
NO	NUMBER
NTS	NOT TO SCALE
OC	ON CENTER
ODU	OUTDOOR UNIT
OL	OVERLOAD
P	POLE
PC	PLUMBING CONTRACTOR OR PHOTOCELL
ø	PHASE
PL	PILOT LIGHT
PR	PAIR
PT	POTENTIAL TRANSFORMER
PVC	POLYVINYL CHLORIDE
QTY	QUANTITY
R	EXISTING TO REMAIN
RECEPT	RECEPTACLE
RGC	RIGID GALVANIZED CONDUIT
RL	RELOCATE OR RELOCATED
RM	ROOM
RPZ	REDUCED PRESSURE ZONE BACKFLOW PREVENTOR
SEC	SECONDS OR SECONDARY
SPECS	SPECIFICATIONS
SN	SOLID NEUTRAL
SS	STAINLESS STEEL
SW	SWITCH
SWGR	SWITCHGEAR
TC	TIME DELAY ON CLOSING
TEL	TELEPHONE
TO	TIME DELAY ON OPENING
TS	TIME SWITCH
TW	TWISTED
TYP	TYPICAL
UG	UNDERGROUND
UNO	UNLESS NOTED OTHERWISE
V	VOLTS
W	WATTS
WP	WEATHERPROOF
XFMR	TRANSFORMER

Legend

	RACEWAY CONCEALED ABOVE CEILING OR IN WALLS
	RACEWAY EXPOSED ON WALLS OR CEILING
	RACEWAY CONCEALED BELOW OR IN SLAB/FLOOR
PPA-1,3	HOMERUN TO PANEL, ARROWS INDICATE NO. OF CIRCUITS
	FLEXIBLE METAL CONDUIT OR LIQUIDTIGHT FLEX AS APPLICABLE
3/4" C.	CONDUIT: SIZE AND FILL AS NOTED
3 #12 & 1 #12 EG	THREE NO. 12 AWG CONDUCTORS AND ONE NO. 12 AWG EQUIPMENT GROUND
	GROUND AS PRESCRIBED BY CODES, OR AS SHOWN
$	SINGLE POLE SWITCH, 48" AFF, UNO
$_3$	THREE WAY SWITCH, 48" AFF, UNO
$_4$	FOUR WAY SWITCH, 48" AFF, UNO
$_D$	DIMMER SWITCH, 48" AFF, UNO
$_O$	WALL BOX OCCUPANCY SENSOR, 48" AFF UNO, SEE SPECS SECTION 262726
3$_O$	THREE WAY WALL BOX OCCUPANCY SENSOR, 48" AFF, UNO, SEE SPECS SECTION 262726
D$_O$	WALL BOX COMBINATION OCCUPANCY SENSOR/DIMMER SWITCH, 48" AFF, UNO, SEE SPECS SECTION 262726
$_{WP}$	WEATHERPROOF SINGLE POLE SWITCH, 48" AFF, UNO
OS	FLUSH CEILING MOUNTED OCCUPANCY SENSOR WITH FAN AND POWER PACK, SEE SPECS SECTION 262726.
J	JUNCTION BOX, SIZE AS SPECIFIED OR REQUIRED
	DUPLEX RECEPTACLE, 18" AFF, UNO
	DUPLEX RECEPTACLE, 42" AFF, UNO
GFI	GROUND FAULT RECEPTACLE, 18" AFF
GFI	GROUND FAULT RECEPTACLE, 42" AFF
Q	QUADRAPLEX RECEPTACLE, 18" AFF, UNO
Q	QUADRAPLEX RECEPTACLE, 42" AFF, UNO
WP	WEATHERPROOF DUPLEX RECEPTACLE, 18" AFF, UNO
WP	WEATHERPROOF DUPLEX RECEPTACLE, 42" AFF, UNO
	TELECOMMUNICATIONS OUTLET, 18" AFF, UNO, WITH 1-3/4" C. TO ACCESSIBLE CEILING CAVITY. PROVIDE AND INSTALL 2 CAT-6 CABLES PER OUTLET, SEE FUNCTIONAL TELECOMMUNICATIONS RISER DIAGRAM
WAP	CEILING MOUNTED WIRELESS ACCESS POINT WITH 1 CAT-6 CABLE, SEE FUNCTIONAL TELECOMMUNICATION RISER DIAGRAM
	CABLE TELEVISION OUTLET, 18" AFF, UNO, WITH 1-3/4" EMPTY C. TO ACCESSIBLE CEILING CAVITY. CABLES PROVIDED AND INSTALLED BY OWNER
TS	TIME SWITCH, SEE SPECS.
PC	PHOTOCELL
	ELECTRICAL DISTRIBUTION PANELBOARD, SEE PANEL SCHEDULE
30 SAF. SW. PLAN / 30 SAF. SW. ELEVATION / CIRC. BKR. PLAN / CB 30 CIRC. BKR. ELEVATION	ENCLOSED CIRCUIT BREAKER OR FUSIBLE HEAVY DUTY SAFETY SWITCH, 250 OR 600 VOLT AS APPLICABLE, NEMA-1 ENCLOSURE, 3P, 4W, UNO "30" INDICATES RATING IN AMPERES "CB" INDICATES ENCLOSED CIRCUIT BREAKER "2P" INDICATES 2 POLE, 3 WIRE "3P" INDICATES 3 POLE, 3 WIRE "NF" INDICATES NON-FUSIBLE SAFETY SWITCH "SE" INDICATES U.L. SERVICE ENTRANCE LABEL "3R" INDICATES NEMA-3R ENCLOSURE
LX	RECESS MOUNTED LED LIGHTING FIXTURE, LETTER INDICATES FIXTURE TYPE, SEE LIGHTING FIXTURE SCHEDULE
LX	SURFACE/PENDANT MOUNTED LED LIGHTING FIXTURE. LETTER INDICATES FIXTURE TYPE, SEE LIGHTING FIXTURE SCHEDULE
LX	RECESSED LED DOWNLIGHTING FIXTURE. LETTER INDICATES FIXTURE TYPE, SEE LIGHTING FIXTURE SCHEDULE
LX	CEILING OUTLET AND LED TYPE LIGHTING FIXTURE. LETTER INDICATES FIXTURE TYPE, SEE LIGHTING FIXTURE SCHEDULE
LX	WALL OUTLET AND LED TYPE LIGHTING FIXTURE. LETTER INDICATED FIXTURE TYPE, SEE LIGHTING FIXTURE SCHEDULE
X1	CEILING OUTLET AND SINGLE FACE EXIT SIGN WITHOUT CHEVRONS, SEE LIGHTING FIXTURE SCHEDULE
X1	CEILING OUTLET AND SINGLE FACE EXIT SIGN WITH CHEVRONS AS INDICATES, SEE LIGHTING FIXTURE SCHEDULE
X1	CEILING OUTLET AND DOUBLE FACE EXIT SIGN WITH CHEVRONS AS INDICATES, SEE LIGHTING FIXTURE SCHEDULE
X2	WALL OUTLET AND SINGLE FACE EXIT SIGN WITHOUT CHEVRONS, SEE LIGHTING FIXTURE SCHEDULE
X2	WALL OUTLET AND SINGLE FACE EXIT SIGN WITH CHEVRONS AS INDICATES, SEE LIGHTING FIXTURE SCHEDULE
X2	WALL OUTLET AND DOUBLE FACE EXIT SIGN WITH CHEVRONS AS INDICATES, SEE LIGHTING FIXTURE SCHEDULE
E1	WALL OUTLET AND EMERGENCY LIGHTING FIXTURE, SEE LIGHTING FIXTURE SCHEDULE

Electrical General Notes

1. ALL EQUIPMENT SHOWN DOTTED OR DASHED IS BY OTHERS OR IS EXISTING, AS NOTED.
2. THE DRAWINGS INDICATE THE NUMBER OF BRANCH CIRCUIT HOMERUN PHASE CONDUCTORS VIA ARROWHEADS. PROVIDE NEUTRAL AND EQUIPMENT GROUND CONDUCTORS AS REQUIRED. ADDITIONAL CONDUCTORS REQUIRED FOR CONTROL SHALL BE INCLUDED EVEN IF NOT EXPLICITLY SHOWN.
3. ALL MOTORS, DRY TYPE TRANSFORMERS AND OTHER VIBRATING EQUIPMENT SHALL BE CONNECTED TO THE CONDUIT SYSTEM BY MEANS OF A SHORT SECTION (18 INCH MINIMUM) OF FLEXIBLE CONDUIT UNLESS OTHERWISE INDICATED. AN EQUIPMENT GROUNDING CONDUCTOR SHALL BE INSTALLED INSIDE THE FLEXIBLE CONDUIT AND TERMINATE AT THE LOAD END WITH AN APPROVED GROUNDING CLAMP OR LUG.
4. SURFACE MOUNTED PANELBOARDS, JUNCTION, OUTLET AND PULL BOXES, RACEWAYS, ETC., INSTALLED ON EXTERIOR SURFACES OR INSIDE ON EXTERIOR WALLS SHALL BE SUPPORTED BY SPACERS TO PROVIDE A 1/4" MINIMUM CLEARANCE BETWEEN THE WALL AND EQUIPMENT.
5. CEILING MOUNTED DEVICES INSTALLED IN ACOUSTICAL TILE CEILING AREAS SHALL BE SUPPORTED FROM THE STRUCTURE ABOVE WITH RODS OF SUFFICIENT SIZE TO PREVENT VERTICAL MOVEMENT OF THE OUTLET BOX. BRIDGES ALONE ARE NOT ADEQUATE UNLESS SPECIFICALLY APPROVED. CEILING MOUNTED EXIT LIGHT FIXTURES SHALL BE INSTALLED LEVEL. DO NOT SUPPORT DEVICES FROM ACOUSTICAL CEILING TILE.
6. INSTALL WIRING DEVICES AT HEIGHTS AS SHOWN ON THE DRAWINGS. ALSO COORDINATE MOUNTING HEIGHTS WITH THE ARCHITECTURAL DRAWINGS AND CASEWORK DETAILS. IF CONFLICTING, ARCHITECTURAL DRAWINGS AND DETAILS SHALL GOVERN.
7. PROVIDE GROUND FAULT CIRCUIT-INTERRUPTER (GFCI) PROTECTION FOR PERSONNEL IN ACCORDANCE WITH THE NEC INCLUDING ALL ELECTRIC WATER COOLERS, EXTERIOR RECEPTACLES AND RECEPTACLES IN AREAS SUBJECT TO POSSIBLE WET CONDITIONS. ALL RECEPTACLES INSTALLED WITHIN 6 FEET OF A SINK SHALL BE GFI PROTECTED. ALL RECEPTACLES IN NON-RESIDENTIAL KITCHENS SHALL BE GFI PROTECTED.
8. GFCI RECEPTACLES SHALL BE READILY ACCESSIBLE AFTER INSTALLATION. IF CONDITIONS OF THE INSTALLATION TO NOT ALLOW FOR READY ACCESS, PROVIDE A STANDARD RECEPTACLE AND PROVIDE A GFCI CIRCUIT BREAKER TO FEED THE CIRCUIT.
9. IN AREAS IN WHICH DUAL LEVEL SWITCHING IS INDICATED (TYPICALLY BY 2 OR MORE ADJACENT, GANGED SWITCHES), PROVIDE THE APPROPRIATE NUMBER OF CONDUCTORS TO FACILITATE THIS FUNCTION (AS TYPICALLY SHOWN).
10. CONNECT BATTERY PACK TYPE EMERGENCY AND EXIT LIGHTING FIXTURES AND EMERGENCY BATTERY (BODINE TYPE) DRIVERS TO THE UNSWITCHED LIGHTING CIRCUIT SERVING THE SPACE LIGHTED BY THE EMERGENCY AND EXIT FIXTURES. THESE CONNECTIONS ARE INTENTIONALLY NOT SHOWN TO MAINTAIN DRAWING CLARITY.
11. COORDINATE LIGHTING FIXTURE LOCATIONS WITH THE ARCHITECTURAL REFLECTED CEILING PLAN. IF CONFLICTS ARE NOTED, REQUEST CLARIFICATION FROM THE ARCHITECT/ENGINEER BEFORE PROCEEDING.
12. ADJACENT SWITCHES SHALL BE GANGED. INSTALL BARRIERS BETWEEN UNLIKE VOLTAGE SECTIONS.
13. ADJACENT RECEPTACLES AND DATA/TELEPHONE OUTLETS SHALL BE INSTALLED 6 INCHES CENTER TO CENTER AND SHALL BE AT THE SAME ELEVATION.
14. SEPARATE NEUTRALS ARE REQUIRED FOR ALL DIMMED LIGHTING CIRCUITS.
15. WHERE THE DRAWINGS INDICATE A LIGHTING FIXTURE IS TO BE PROVIDED WITH SPECIAL FEATURES/SWITCHING (DIMMING, EMERGENCY BATTERY DRIVER, MULTI-LEVEL, ETC), THE CONTRACTOR SHALL PROVIDE THESE FIXTURES WITH THE APPROPRIATE BALLASTING TO ACCOMMODATE THE SPECIAL FEATURE. THE CONTRACTOR SHALL PROVIDE THE FIXTURES AS INDICATED IN THE LIGHTING FIXTURE SCHEDULE WITH MODIFICATIONS AS REQUIRED BY DRAWING NOTES.
16. LIGHTING FIXTURES ARE, IN SOME INSTANCES, SHOWN TO BE INSTALLED ON THE BOTTOM OF THE EXPOSED STRUCTURE. THE CONTRACTOR SHALL NOT INSTALL FIXTURES ABOVE DUCTWORK WHICH BLOCKS LIGHTING FROM REACHING THE FLOOR. FIELD ADJUST FIXTURE LOCATIONS TO AVOID DUCTWORK AND OTHER EQUIPMENT WHICH INTERFERES WITH INTENDED LIGHTING OF THE SPACE. INSTALL FIXTURES ON WALLS IN SPACES WHERE FIXTURE OUTPUT WOULD OTHERWISE BE BLOCKED. COORDINATE RELOCATIONS WITH THE ARCHITECT/ENGINEER.
17. THE LOCATIONS OF ELECTRICAL EQUIPMENT SERVING MECHANICAL, PLUMBING, GENERAL- AND OWNER-PROVIDED EQUIPMENT MAY NOT BE SHOWN PRECISELY ON THE ELECTRICAL DRAWINGS DUE TO THE VARIABILITY OF SPACE AND EQUIPMENT ARRANGEMENTS AND THE EQUIPMENT PROVIDED. LOCATIONS OF ELECTRICAL EQUIPMENT, PANELBOARDS, WIRING TROUGHS, LOCAL DISCONNECTING MEANS, ETC. SHALL BE COORDINATED WITH THE RESPECTIVE CONTRACTORS PRIOR TO ROUGH-IN. LOCATE AND/OR ADJUST EQUIPMENT LOCATIONS SHOWN IN CONSULTATION WITH OTHER TRADES TO MAINTAIN VISABILITY OF THE EQUIPMENT FROM DISCONNECTING MEANS AND PROVIDE ACCESS AND WORKING SPACE IN COMPLIANCE WITH CODES.
18. THE LAYOUT AND PLACEMENT OF ELECTRICAL DISTRIBUTION EQUIPMENT IS BASED ON PUBLISHED EQUIPMENT SIZES AND SHALL BE FOLLOWED AS CLOSELY AS POSSIBLE. DEVIATIONS FROM CONFIGURATIONS SHOWN IS THE RESPONSIBILITY OF THE CONTRACTOR. PROVIDE NATIONAL ELECTRIC CODE REQUIRED CLEARANCES FOR ALL ELECTRICAL EQUIPMENT, PANELBOARDS, TRANSFORMERS, SAFETY SWITCHES, ETC. COORDINATE RESOLUTION OF CONFLICTS WITH OTHER TRADES. ADVISE THE ARCHITECT/ENGINEER OF CONFLICTS BEFORE ROUGH-IN.
19. INSTALLATION INFORMATION PACKED WITH LIGHTING FIXTURES, DEVICES AND EQUIPMENT SHALL BE RETAINED FOR INCLUSION IN THE OPERATIONS AND MAINTENANCE MANUALS.

Electrical System and Equipment Method of Compliance

Prescriptive X Performance ____ Energy Cost Budget ____

Provide a standard riser diagram which indicates designated points for check metering.
Provide a standard panel schedule description which identifies different enduse loads.

Lighting Schedule:
- lamp type required in fixture: see fixture schedule
- number of lamps in fixture: see fixture schedule
- ballast type used in the fixture: see fixture schedule
- number of ballasts in fixture: see fixture schedule
- total wattage per fixture: see fixture schedule

Total interior wattage:
Allowed = 7,287 Watts
Specified = 4,721 Watts

Exterior Allowance:
(Tradeable Surfaces)
Allowed = 600 Watts
Specified = 137 Watts

(Non-tradeable Surfaces:)
Allowed = N/A Watts
Specified = N/A Watts

Equipment schedules with motors (not used for mechanical systems):
- motor horse power: N/A
- number of phases: N/A
- minimum efficiency: N/A
- motor type: N/A
- # of poles: N/A

McFadyen Engineers, PLLC
4411 Peachtree Avenue Wilmington, NC 28403 Phone: 910.399.1125
© Copyright 2020 McFadyen Engineers, PLLC
NC# P-1010

bmh
BOWMAN MURRAY HEMINGWAY ARCHITECTS
514 Market Street
Wilmington, NC 28406
Tel - (910) 762-2621
Fax - (910) 762-8506

NORTH CAROLINA PROFESSIONAL ENGINEER SEAL 8433 R. DUNCAN McFADYEN
7-20-20

THE DAVIS COMMUNITY
Central Services Center

1011 Porter's Neck Road
Wilmington, North Carolina 28411

REV.	DATE	DESCRIPTION

NO.	DATE	ISSUE NOTE
1	7-20-2020	PERMIT SET

Project Manager: WPJ	Drawn By: WPJ
Date: July 20, 2020	Reviewed By: RDM
Project ID	

Sheet Title
Abbreviations, Legend, General Notes and Energy Summary

Sheet No.
E001

Electrical Specifications

260500 GENERAL ELECTRICAL

A. ALL WORK SHALL BE INSTALLED IN ACCORDANCE WITH THE LATEST EDITION OF THE FOLLOWING CODES AND STANDARDS INSOFAR AS THEY APPLY.
1. THE NATIONAL ELECTRICAL CODE, 2017 EDITION
2. THE NATIONAL ELECTRICAL SAFETY CODE
3. UNDERWRITER'S LABORATORIES, INC., STANDARDS AND APPROVED LISTINGS
4. ELECTRICAL TESTING LABORATORIES STANDARDS
5. NORTH CAROLINA STATE BUILDING CODE, LATEST EDITION AND REVISIONS
6. ALL LOCAL CODES AND ORDINANCES
7. NFPA 72
8. ADA

B. SAFETY:
1. COMPLY WITH OSHA AND NEC ARC FLASH HAZARD PROTECTION REQUIREMENTS.
2. FOR EQUIPMENT BEING REMOVED AND REPLACED, THE CONTRACTOR SHALL DE-ENERGIZE THE EQUIPMENT AND MAKE IT SAFE PRIOR TO REMOVAL AND COMPLY WITH OSHA REQUIREMENTS FOR LOCKING-OUT AND TAGGING EQUIPMENT TO PREVENT INADVERTENT RE-ENERGIZING.
3. WHERE EQUIPMENT IS BEING REMOVED, BUT NOT REPLACED, REMOVE THE CONDUCTORS FEEDING THE EQUIPMENT BACK TO THE POINT WHERE THEY RECEIVE POWER. REMOVE ACCESSIBLE CONDUITS. ABANDON IN PLACE INACCESSIBLE CONDUITS. AFTER REMOVAL OF EQUIPMENT, REPAIR ANY OPENING LEFT TO MATCH SURROUNDING WALLS, CEILINGS, OR FLOORS TO THE ARCHITECT/ENGINEER'S SATISFACTION.
4. COORDINATE WITH THE OTHER TRADES, PRIOR TO BID, AND INCLUDE IN THE BASE BID THE ELECTRICAL DISCONNECTION OF ANY EQUIPMENT BEING DEMOLISHED, EVEN IF NOT EXPLICITLY SHOWN. UNLESS NOTED OTHERWISE, REMOVE ALL DEMOLISHED EQUIPMENT FROM THE PROPERTY.

C. THE CONTRACTOR SHALL REVIEW THE ARCHITECTURAL DRAWINGS AND SPECIFICATIONS FOR WORK REQUIREMENTS, THE AMOUNT OF SPACE AVAILABLE FOR ELECTRICAL EQUIPMENT, AND LAYOUT HIS WORK IN A COMPATIBLE AND COMPLEMENTARY MANNER.

D. SEE ELECTRICAL GENERAL NOTES FOR ADDITIONAL REQUIREMENTS, CONDITIONS AND RESTRICTIONS.

E. UNLESS SPECIFICALLY NOTED OTHERWISE, SYSTEMS PROVIDED OR INSTALLED BY THE CONTRACTOR SHALL BE COMPLETE AND FULLY-FUNCTIONING AFTER INSTALLATION. INCIDENTAL COMPONENTS MAY NOT BE SHOWN, AND ALL WORK WHICH MAY BE REASONABLY IMPLIED AS BEING INCIDENTAL TO THIS WORK, BUT REQUIRED FOR THE PROPER OPERATION OF THE EQUIPMENT OR SYSTEM, SHALL BE PROVIDED AT NO ADDITIONAL COST TO THE OWNER. ADDITIONAL CIRCUITS SHALL BE PROVIDED AND INSTALLED WHEREVER NEEDED TO CONFORM TO THE SPECIFIC REQUIREMENTS OF EQUIPMENT.

F. THE CONTRACTOR SHALL ALSO BE RESPONSIBLE FOR THOROUGHLY FAMILIARIZING HIMSELF WITH ANY CONTRACTUAL REQUIREMENTS AS MAY BE SET FORTH IN THE OTHER DIVISIONS OF THE PROJECT SPECIFICATIONS.

G. THE CONTRACTOR SHALL OBTAIN ALL PERMITS, LICENSES, INSPECTIONS, ETC., REQUIRED FOR THE WORK AND SHALL PAY FOR SAME, IF ANY. WORK SHALL NOT BE COVERED UP OR ENCLOSED UNTIL IT HAS BEEN INSPECTED, TESTED AND APPROVED BY THE ARCHITECT/ENGINEER AND AUTHORITIES HAVING JURISDICTION OVER THIS WORK. SHOULD ANY OF THE WORK BE ENCLOSED OR COVERED UP BEFORE SUCH INSPECTION AND TEST, THE CONTRACTOR SHALL UNCOVER THE WORK AT THE CONTRACTOR'S EXPENSE. AFTER IT HAS BEEN INSPECTED, TESTED AND APPROVED, THE CONTRACTOR SHALL RESTORE THE WORK TO ITS ORIGINAL CONDITION.

H. BIDDERS SHALL HAVE A WORKING KNOWLEDGE OF LOCAL CODES AND ORDINANCES AND SHALL INCLUDE IN THEIR BIDS THE COSTS FOR ALL WORK INSTALLED IN STRICT ACCORDANCE WITH GOVERNING CODES, THE CONSTRUCTION DOCUMENTS NOTWITHSTANDING.

I. THE CONTRACTOR SHALL VISIT THE SITE AND BECOME FAMILIAR WITH THE EXISTING CONDITIONS. THE SUBMISSION OF THE PROPOSAL BY THE CONTRACTOR SHALL BE CONSIDERED EVIDENCE THAT HE OR HIS REPRESENTATIVE HAS VISITED THE SITE AND NOTED THE LOCATION AND CONDITIONS UNDER WHICH THE WORK WILL BE PERFORMED AND THAT HE TAKES FULL RESPONSIBILITY OF ALL FACTORS GOVERNING HIS WORK. NO EXTRAS WILL BE CONSIDERED BECAUSE OF ADDITIONAL WORK NECESSITATED BY EXISTING JOB CONDITIONS THAT ARE NOT INDICATED ON THE DRAWINGS.

J. ALL WORK SHALL BE DONE BY SKILLED MECHANICS AND SHALL PRESENT A NEAT, TRIM AND WORKMANLIKE FINISH WHEN COMPLETED.

K. DO NOT SCALE ELECTRICAL DRAWINGS. FIELD VERIFY ALL DIMENSIONS.

L. UNLESS DIMENSIONED, WIRING DEVICE, TELECOM AND OTHER OUTLET LOCATIONS SHOWN ON THE DRAWINGS ARE APPROXIMATE. EXACT DEVICE AND OUTLET LOCATIONS SHALL BE AS INDICATED ON THE ARCHITECTURAL DRAWINGS OR AS DIMENSIONED. IF NOT SHOWN ON THE ARCHITECTURAL DRAWINGS OR DIMENSIONED ON THE ELECTRICAL DRAWINGS, VERIFY EXACT LOCATION WITH THE ARCHITECT/ENGINEER AND/OR THE OWNER PRIOR TO ROUGH-IN.

M. THE CONTRACTOR SHALL REFER TO THE ARCHITECTURAL DRAWINGS FOR EXACT MEASUREMENTS IN THE PLACEMENT OF EQUIPMENT, FIXTURES, ETC.

N. THE CONTRACTOR IS RESPONSIBLE FOR PROVIDING COMPLETE ELECTRICAL CONNECTIONS AS THE DRAWINGS DO NOT PROVIDE EXACT DETAILS AS TO ELEVATIONS AND LOCATIONS OF VARIOUS FITTINGS, CONDUIT, ETC., AND DO NOT SHOW ALL OFFSETS AND OTHER INSTALLATION DETAILS, ALL WHICH MAY BE REQUIRED. ADJUST LOCATIONS AS REQUIRED TO SERVE THE INTENDED PURPOSE AND TO AVOID CONFLICTS AND INTERFERENCES WITH OTHER TRADES.

O. UNLESS NOTED OTHERWISE, THE EXACT ROUTING OF FEEDER AND BRANCH CIRCUIT RACEWAYS AND CABLES IS THE RESPONSIBILITY OF THE CONTRACTOR. RISER AND GENERAL CIRCUIT ARRANGEMENTS ARE SHOWN SCHEMATICALLY/DIAGRAMMATICALLY ONLY. THE CONTRACTOR SHALL ROUTE CONDUITS AND CABLES AS REQUIRED BY THE CONDITIONS OF THE INSTALLATION.

P. WORK WITH OTHER CONTRACTORS: THE ELECTRICAL CONTRACTOR SHALL MAKE FINAL ELECTRICAL CONNECTIONS FOR ALL PLUMBING AND HVAC EQUIPMENT, GENERAL CONTRACTOR– AND OWNER–PROVIDED EQUIPMENT.

Q. COORDINATION
1. COORDINATE LOCATIONS OF PLUMBING, MECHANICAL, DATA, AUDIO/VISUAL EQUIPMENT AND OF OWNER–PROVIDED EQUIPMENT WITH THE RESPECTIVE CONTRACTORS AND VENDORS AND THE OWNER BEFORE ROUGH–IN. ADJUST LIGHTING FIXTURES, RECEPTACLES, OUTLETS AND ELECTRICAL EQUIPMENT TO ACCOMMODATE THIS EQUIPMENT. ADVISE THE ARCHITECT/ENGINEER OF CONFLICTS BEFORE ROUGH–IN.
2. ENERGIZE EQUIPMENT ONLY AFTER OBTAINING PERMISSION FROM THE CONTRACTOR OR ENTITY PROVIDING THE EQUIPMENT.
3. BEFORE COMMENCING WORK OR ORDERING MATERIALS, THE CONTRACTOR SHALL COORDINATE WITH OTHER TRADES AND VERIFY THE NAMEPLATE RATINGS OF ALL EQUIPMENT (MOTORS, HEATERS, COMPRESSORS, ETC.) AND ADJUST THE RATINGS OF THE ELECTRICAL EQUIPMENT (SWITCHES, FUSES, CIRCUIT BREAKERS, CONDUCTORS, RACEWAYS, ETC.) AS APPROPRIATE TO SERVE THIS EQUIPMENT.
4. UNLESS SPECIFICALLY NOTED OTHERWISE, THE ELECTRICAL CONTRACTOR SHALL MAKE FINAL CONNECTIONS TO ALL UTILIZATION EQUIPMENT SHOWN ON THE DRAWINGS. VERIFY THE TYPE OF FINAL CONNECTION AND PROVIDE APPROPRIATE WIRING METHOD. THE ELECTRICAL CONTRACTOR SHALL COORDINATE WITH THE MECHANICAL, PLUMBING AND GENERAL CONTRACTORS, PRIOR TO ORDERING OR INSTALLATION OF ANY EQUIPMENT, TO VERIFY MECHANICAL AND PLUMBING EQUIPMENT REQUIREMENTS ARE PROVIDED IN THE ELECTRICAL DESIGN. THE CONTRACTOR WILL NOT BE COMPENSATED FOR COSTS ASSOCIATED WITH CHANGING THE ELECTRICAL SYSTEMS TO MATCH UTILIZATION EQUIPMENT, EVEN IF THE ELECTRICAL WORK IS INSTALLED PER THE ELECTRICAL DRAWINGS.
5. THE MECHANICAL AND PLUMBING CONTRACTORS SHALL FURNISH ALL STARTERS AND CONTROLS FOR THEIR EQUIPMENT. THE ELECTRICAL CONTRACTOR SHALL PROVIDE ALL SAFETY SWITCHES AND PROVIDE LOAD SIDE WIRING AND CONNECTIONS TO MECHANICAL AND PLUMBING EQUIPMENT. THE MECHANICAL AND PLUMBING CONTRACTORS SHALL PROVIDE ALL CONTROL WIRING AND CONNECTIONS AND DEVICES FOR THEIR EQUIPMENT.
6. THE ELECTRICAL CONTRACTOR SHALL COORDINATE ALL EQUIPMENT TERMINATIONS, PLUGS AND CORDSETS WITH VENDOR EQUIPMENT AND VERIFY ALL DEVICE AND OUTLET LOCATIONS FOR SPECIALTY EQUIPMENT WITH CASEWORK PRIOR TO ROUGH–IN.
7. HVAC CONTROLS POWER AND POWER FOR UNSCHEDULED HVAC EQUIPMENT: THE ELECTRICAL CONTRACTOR SHALL PROVIDE BRANCH CIRCUIT POWER SOURCES (DESIGNATED "SPARE" 20A CIRCUIT BREAKERS IN SELECTED BRANCH CIRCUIT PANELBOARDS) AS INDICATED IN THE PANEL SCHEDULES ON THE DRAWINGS. THE HVAC CONTRACTOR SHALL EXTEND POWER FROM THESE CIRCUIT BREAKERS AS REQUIRED FOR CONTROL POWER, DAMPER POWER, AND POWER FOR UNSCHEDULED HVAC EQUIPMENT.

R. MATERIALS: ALL MATERIALS SHALL BE NEW AND SHALL BEAR THE MANUFACTURER'S NAME AND TRADE NAME. MATERIALS SHALL BE THE STANDARD PRODUCTS OF MANUFACTURERS REGULARLY ENGAGED IN THE MANUFACTURE OF THE REQUIRED TYPE OF EQUIPMENT AND THE MANUFACTURER'S LATEST APPROVED DESIGN. OTHER MATERIALS AND EQUIPMENT TO BE AS SHOWN ON THE DRAWINGS. WHERE NO SPECIFIC MATERIAL TYPE IS MENTIONED, A HIGH QUALITY PRODUCT OF A REPUTABLE MANUFACTURER, AS JUDGED BY THE ARCHITECT/ENGINEER, MAY BE USED PROVIDED IT CONFORMS TO THE REQUIREMENTS OF THESE SPECIFICATIONS.

S. ALL ELECTRICAL EQUIPMENT AND MATERIAL SHALL BE LISTED BY A QUALIFIED THIRD PARTY TESTING AGENCY ACCEPTABLE TO THE AUTHORITY HAVING JURISDICTION, FOR THE CONDITIONS OF INSTALLATION. ACCEPTABLE QUALIFIED THIRD PARTY TESTING LABORATORIES/AGENCIES SHALL BE AMONGST THOSE ACCREDITED BY THE NORTH CAROLINA BUILDING CODE COUNCIL (NCBCC) TO LABEL ELECTRICAL AND MECHANICAL EQUIPMENT. EQUIPMENT AND MATERIALS SHALL BEAR THE APPROPRIATE TESTING AGENCY'S LISTING MARK OR CLASSIFICATION MARKING. EQUIPMENT, MATERIALS, ETC. UTILIZED NOT BEARING A THIRD PARTY TESTING AGENCY CERTIFICATION SHALL BE FIELD OR FACTORY LABELED BY A TESTING AGENCY CERTIFIED PRIOR TO EQUIPMENT ACCEPTANCE AND USE. FIELD CERTIFICATIONS SHALL BE AT THE CONTRACTOR'S EXPENSE.

T. EQUIPMENT SHALL BE SUITABLE FOR ITS APPLICATION (E.G., WHEN INSTALLED IN THE EXTERIOR, IT SHALL BE WEATHERPROOF, ETC.) ALL EXTERIOR WIRING DEVICES, OUTLETS, BOXES, ETC. SHALL BE WEATHERPROOF. LIGHTING FIXTURES SHALL BE APPROPRIATELY RATED AND LISTED FOR THE ENVIRONMENT.

U. ALL ELECTRICAL EQUIPMENT SHALL, AT ALL TIMES DURING CONSTRUCTION, BE ADEQUATELY PROTECTED AGAINST MECHANICAL INJURY, OR DAMAGE BY WATER AND/OR THE ELEMENTS. ELECTRICAL EQUIPMENT SHALL BE STORED IN DRY PERMANENT SHELTERS. PROVIDE HEATING FOR EQUIPMENT SUBJECT TO MOISTURE DAMAGE OR DAMAGE FROM CONDENSATION. IF MATERIALS OR EQUIPMENT HAVE BEEN JUDGED BY THE ARCHITECT/ENGINEER TO BE DAMAGED, OR HAS BEEN SUBJECT TO POSSIBLE INJURY BY WATER OR THE ELEMENTS, SUCH EQUIPMENT SHALL BE REPLACED AT NO ADDITIONAL COST TO THE OWNER.

V. WIRING METHODS: ALL WORK SHALL BE IN METALLIC CONDUIT, EXCEPT TYPE MC CABLE MAY BE USED AS DETAILED BELOW.

W. UTILITY COMPANY COORDINATION
1. COORDINATION WITH THE ELECTRICAL UTILITY COMPANY IS THE RESPONSIBILITY OF THE ELECTRICAL CONTRACTOR. COORDINATE WITH THE UTILITY COMPANY FOR PLACEMENT OF THE UTILITY'S FACILITIES AND THE CONTRACTOR'S SERVICE ENTRANCE RACEWAYS AND FOR CONNECTIONS TO THE CONTRACTOR'S SERVICE ENTRANCE CONDUCTORS.
2. ALL ELECTRICAL DISTRIBUTION EQUIPMENT (PANELBOARDS, CIRCUIT BREAKERS, SAFETY SWITCHES, ETC.) SHALL, AS A MINIMUM, BE PROVIDED WITH SHORT CIRCUIT WITHSTAND AND INTERRUPTING RATINGS AS SHOWN IN THE DRAWINGS. COORDINATE ACTUAL FAULT CURRENT AVAILABLE WITH THE SERVING UTILITY COMPANY AND ADJUST RATINGS AS APPROPRIATE. PROVIDE DEVICES WITH CURRENT LIMITING CHARACTERISTICS AS REQUIRED TO SAFELY FUNCTION AND PROTECT THE DISTRIBUTION SYSTEM.

X. TESTING
1. THE WORK SHALL INCLUDE COMPLETE TESTING OF ALL EQUIPMENT AND WIRING DURING CONSTRUCTION AND/OR AT THE COMPLETION OF WORK AND ANY MINOR CORRECTIONS, CHANGES OR ADJUSTMENTS NECESSARY FOR THE PROPER FUNCTIONING OF THE SYSTEM AND EQUIPMENT.
2. MAKE THE FOLLOWING MINIMUM TESTS AND CHECKS PRIOR TO ENERGIZING ELECTRICAL EQUIPMENT:
   a. MECHANICAL INSPECTION, TESTING AND SETTINGS OF ALL CIRCUIT BREAKERS, DISCONNECTING MEANS/SAFETY SWITCHES, MOTOR STARTERS, CONTROL EQUIPMENT, ETC., FOR PROPER OPERATION. ALL OVERCURRENT PROTECTIVE DEVICES SHALL BE SET AS RECOMMENDED BY THE SELECTIVE COORDINATION STUDY, IF APPLICABLE.
   b. CHECK ALL WIRE AND CABLE TERMINATIONS. VERIFY TO THE ARCHITECT/ENGINEER THAT CONNECTIONS MEET THE EQUIPMENT TORQUE REQUIREMENTS.
   c. CHECK ROTATION OF MOTORS, OBTAIN PERMISSION FROM OTHER CONTRACTORS TO START MOTORS, AND PROCEED TO CHECK FOR PROPER ROTATION. TAKE ALL NECESSARY PRECAUTIONS NOT TO DAMAGE ANY EQUIPMENT.
   d. PROVIDE ALL INSTRUMENTS AND EQUIPMENT FOR THE TESTS SPECIFIED HEREIN.
3. ALL CURRENT CARRYING PHASE CONDUCTORS AND NEUTRALS SHALL BE TESTED AS INSTALLED, AND BEFORE CONNECTIONS ARE MADE, FOR INSULATION RESISTANCE AND ACCIDENTAL GROUNDS. THIS SHALL BE DONE WITH A 500 VOLT CABLE INSULATION TESTER.
   a. MINIMUM READINGS SHALL BE ONE MILLION (1,000,000) OR MORE OHMS FOR #6 WIRE AND SMALLER, 250,000 OHMS OR MORE FOR #4 WIRE OR LARGER BETWEEN CONDUCTORS AND BETWEEN CONDUCTOR AND THE GROUNDED METAL RACEWAY.
   b. AFTER ALL FIXTURES, DEVICES AND EQUIPMENT ARE INSTALLED AND ALL CONNECTIONS COMPLETED TO EACH PANEL, THE CONTRACTOR SHALL DISCONNECT THE NEUTRAL FEEDER CONDUCTOR FROM THE NEUTRAL BAR AND TAKE A CABLE INSULATION TESTER READING BETWEEN THE NEUTRAL BAR AND GROUNDED ENCLOSURE. IF THIS READING IS LESS THAN 250,000 OHMS, THE CONTRACTOR SHALL DISCONNECT THE BRANCH CIRCUIT NEUTRAL WIRES FROM THIS NEUTRAL BAR. HE SHALL THEN TEST EACH ONE SEPARATELY TO THE PANEL AND UNTIL THE LOW READING ONES ARE FOUND. THE CONTRACTOR SHALL CORRECT TROUBLES, RECONNECT AND RETEST UNTIL AT LEAST 250,000 OHMS FROM THE NEUTRAL BAR TO THE GROUNDED PANEL CAN BE ACHIEVED WITH ONLY THE NEUTRAL FEEDER DISCONNECTED.
   c. THE CONTRACTOR SHALL CERTIFY IN WRITING THE ABOVE HAS BEEN DONE AND TABULATE THE MEGGER READINGS FOR EACH PANEL.
   d. AT INSPECTION, THE CONTRACTOR SHALL FURNISH A CABLE INSULATION TESTER AND SHOW ARCHITECT/ENGINEER'S REPRESENTATIVE THAT THE PANELS COMPLY WITH THE ABOVE REQUIREMENTS. THE CONTRACTOR SHALL ALSO FURNISH A CLAMP TYPE AMMETER AND A VOLTMETER AND TAKE CURRENT AND VOLTAGE READINGS AS DIRECTED BY THE REPRESENTATIVES.
   e. AT INSPECTION, THE CONTRACTOR SHALL FURNISH LADDERS, REQUIRED TOOLS, AND MECHANICS TO OPEN FIXTURES, BOXES, PANELS, OR ANY OTHER EQUIPMENT TO ENABLE THE ARCHITECT/ENGINEER'S REPRESENTATIVES TO SEE INTO ANY PARTS OF THE INSTALLATION THAT MAY BE REQUESTED.
4. PROVIDE DOCUMENTATION SHOWING VALUES OF THE EARTH GROUND ELECTRODE IMPEDANCE FOR THE SYSTEM GROUND. SEE SPECIFICATIONS SECTION 260526.
5. ALL TESTS SHALL BE COMPLETELY DOCUMENTED WITH THE TIME OF DAY, DATE, TEMPERATURE, TEST INSTRUMENTS MAKE AND MODEL USED, AND ALL OTHER PERTINENT TEST INFORMATION. ALL REQUIRED DOCUMENTATION OF READINGS INDICATED SHALL BE SUBMITTED TO THE ARCHITECT/ENGINEER PRIOR TO, AND AS ONE OF THE PREREQUISITES FOR, FINAL ACCEPTANCE OF THE PROJECT.

Y. SEISMIC REQUIREMENTS
1. ALL EQUIPMENT FURNISHED UNDER THE ELECTRICAL CONTRACT SHALL BE INSTALLED IN A MANNER TO BE FULLY COMPLIANT WITH THE SEISMIC RESTRAINT REQUIREMENTS OF THE NORTH CAROLINA STATE BUILDING CODE (NCSBC). THE CONTRACTOR SHALL PROVIDE ANY AND ALL SEISMIC RESTRAINT DETAILS AND CALCULATIONS THAT MAY BE REQUIRED BY THE NCSBC AND/OR THE AUTHORITY HAVING JURISDICTION.
2. REQUIREMENTS FOR RESTRAINTS ARE DETAILED IN THE NCSBC. ALL TABLES AND REFERENCES SHALL CONFORM TO BUILDING'S LOCATION. RESTRAINTS SHALL BE PER SEISMIC PERFORMANCE CATEGORY STATED ON ARCHITECTURAL DRAWINGS.
3. THE CONTRACTOR SHALL RETAIN THE SERVICES OF A PROFESSIONAL ENGINEER REGISTERED IN THE STATE OF NORTH CAROLINA TO DESIGN SEISMIC RESTRAINT ELEMENTS REQUIRED FOR THIS PROJECT. THE ENGINEER'S CALCULATIONS, BEARING HIS PROFESSIONAL SEAL, SHALL ACCOMPANY SHOP DRAWINGS AND SHALL DEMONSTRATE CODE COMPLIANCE INCLUDING CERTIFICATION THAT THE SEISMIC SYSTEM COMPONENTS COMPLY WITH THE TESTING REQUIREMENTS OF NCSBC SECTION 1708.5. CALCULATIONS AND SHOP DRAWINGS SHALL BE SUBMITTED FOR REVIEW PRIOR TO THE PURCHASING OF MATERIALS, EQUIPMENT, SYSTEMS AND ASSEMBLIES. INTERNAL SEISMIC RESTRAINT ELEMENTS OF MANUFACTURED EQUIPMENT SHALL BE CERTIFIED BY A PROFESSIONAL ENGINEER RETAINED BY THE MANUFACTURER. SUCH CERTIFICATE APPLIES ONLY TO INTERNAL ELEMENTS OF THE EQUIPMENT. ALL EQUIPMENT ANCHORAGE REQUIREMENTS SHALL BE COORDINATED WITH THE BUILDING STRUCTURE AND SHALL BE COMPATIBLE THERETO. ALL SUCH ANCHORAGES SHALL BE SUBJECT TO THE REVIEW AND APPROVAL OF THE PROJECT'S STRUCTURAL ENGINEER.
4. THE PROFESSIONAL ENGINEER RETAINED FOR SEISMIC RESTRAINT CALCULATIONS SHALL VISIT THE JOB SITE UPON COMPLETION OF THE SEISMIC RESTRAINT INSTALLATION TO COMPLY WITH THE SPECIAL INSPECTIONS REQUIREMENT OF THE CODE. THIS ENGINEER SHALL PROVIDE WRITTEN VERIFICATION OF COMPLIANCE OF THE INSTALLATION WITH THE APPROVED SEISMIC SUBMITTAL. THIS VERIFICATION SHALL BE SUBMITTED AS A SPECIAL INSPECTIONS REPORT AND SHALL BEAR THE ENGINEER'S PROFESSIONAL SEAL. JOB SITE INSPECTIONS BY OTHER THAN THIS ENGINEER ARE NOT ACCEPTABLE.
5. REVIEW OF THE SEISMIC DESIGN COMPUTATIONS AND SHOP DRAWINGS BY THE ARCHITECT/ENGINEER OR HIS AGENT SHALL NOT RELIEVE THE CONTRACTOR OF HIS RESPONSIBILITY TO COMPLY WITH THE SEISMIC OR ANY OTHER REQUIREMENTS OF THE NORTH CAROLINA STATE BUILDING CODE.
6. PROJECT CONDITIONS
   a. ASSIGNED SEISMIC DESIGN CATEGORY AS DEFINED IN THE IBC: *.
   b. S$_s$ MAPPED MAXIMUM CONSIDERED EARTHQUAKE SPECTRAL RESPONSE AT SHORT PERIODS: *
   c. S$_1$ MAPPED MAXIMUM CONSIDERED EARTHQUAKE SPECTRAL RESPONSE AT 1–SECOND PERIOD: *
   d. ASSIGNED SEISMIC USE GROUP OR BUILDING CATEGORY AS DEFINED IN THE IBC: I.
   (* CONTRACTOR SHALL CONSULT THE STRUCTURAL DRAWINGS FOR THIS INFORMATION.)

Z. SUBMITTALS: SUBMITTALS SHALL INCLUDE PRODUCT DATA FOR EACH PANELBOARD, TRANSFORMER, SAFETY SWITCH, ENCLOSED CIRCUIT BREAKER, AUTOMATIC TRANSFER SWITCH, ENGINE–GENERATOR SET, LIGHTING FIXTURE, LAMPS, OVERCURRENT PROTECTIVE DEVICE, SURGE PROTECTION DEVICE, FIRE ALARM SYSTEM, TELECOMMUNICATIONS CABLING SYSTEM, SURFACE RACEWAY, WIREWAY, RACEWAY FITTINGS, WIRING DEVICES AND ACCESSORIES. INCLUDE DIMENSIONS AND MANUFACTURERS TECHNICAL DATA ON FEATURES, PERFORMANCE, ELECTRICAL CHARACTERISTICS, RATINGS AND FINISHES. IN LIEU OF SUBMITTALS, THE CONTRACTOR MAY PROVIDE A CERTIFICATION OF PRODUCT COMPLIANCE FOR COMMODITY MATERIALS SUCH AS CONDUIT, CONDUCTORS, BOXES, FITTINGS, HANGARS, HARDWARE, ETC. ATTESTING NAMED PRODUCTS COMPLY WITH THE DRAWINGS AND SPECIFICATIONS. COMPLIANCE FORM SHALL BE ACCEPTABLE TO THE ARCHITECT/ENGINEER. ALL SHOP DRAWINGS AND SUBMITTALS SHALL BE SUBMITTED AT THE SAME TIME. PARTIAL SHOP DRAWING AND SUBMITTALS WILL BE REJECTED AND NOT PROCESSED. MATERIALS AND EQUIPMENT WITH LONG LEAD TIMES OR OTHER MATERIALS AND EQUIPMENT REQUIRING SPECIAL HANDLING, IF IDENTIFIED AND REQUESTED BY THE CONTRACTOR, WILL BE PROCESSED SEPARATELY.

AA. GUARANTEE: THE CONTRACTOR SHALL GUARANTEE THE MATERIALS AND WORKMANSHIP COVERED BY THESE DRAWINGS AND SPECIFICATIONS FOR A PERIOD OF ONE YEAR FROM THE DATE OF ACCEPTANCE BY THE OWNER. THE CONTRACTOR SHALL REPAIR AND/OR REPLACE ANY PARTS OF ANY SYSTEM THAT MAY PROVE TO BE DEFECTIVE AT NO ADDITIONAL COST TO THE OWNER WITHIN THE GUARANTEE PERIOD.

260519 CONDUCTORS

A. CONDUCTORS SHALL BE COPPER WITH 600V INSULATION, MINIMUM SIZE #12 AWG. SIZES #10 AWG AND #12 AWG SHALL BE SOLID, #8 AWG AND LARGER, STRANDED.

B. MC CABLE WITH GREEN INSULATED EQUIPMENT GROUND CONDUCTOR MAY BE USED FOR INTERIOR CONCEALED BRANCH CIRCUITS FOR RECEPTACLE AND LIGHTING CIRCUITS. MC CABLE SHALL BE OF STEEL OR ALUMINUM INTERLOCKED ARMOR CONSTRUCTION WITH COPPER CONDUCTORS AND AN INTERNAL GREEN INSULATED EQUIPMENT GROUNDING CONDUCTOR. CONDUCTOR CHARACTERISTICS, COLOR CODING, ETC. SHALL BE AS HEREIN SPECIFIED FOR BUILDING WIRE. CONNECTORS SHALL BE ZINC PLATED MALLEABLE IRON OR STEEL BODY WITH LOCKNUT, DUAL CABLE GRIPPING SADDLE DESIGN WITH SET SCREW AND INSULATED THROAT. PRESSURE CAST (DOT METAL) CONNECTORS ARE NOT PERMITTED.

C. CONDUCTOR SIZING IS BASED ON 75 DEGREE C. COPPER NEC RATINGS, UNLESS NOTED OTHERWISE. THE CONTRACTOR SHALL VERIFY, PRIOR TO INSTALLATION OF CONDUCTORS OR CONDUIT FEEDING ANY EQUIPMENT, THE ELECTRICAL EQUIPMENT IS RATED FOR USE WITH 75 DEGREE C. WIRING. IF ANY EQUIPMENT IS RATED FOR USE WITH LESS THAN 75 DEGREE C. CONDUCTORS, THE CONTRACTOR SHALL NOTIFY THE ARCHITECT/ENGINEER IMMEDIATELY FOR EVALUATION/CORRECTION.

D. CONDUCTORS SHALL BE COLOR CODED THROUGHOUT, SIZES #10 AWG AND #12 AWG SHALL BE FACTORY CODED, SIZES #8 AWG AND LARGER MAY BE COLOR TAPED ON THE JOB. COLOR CODING SHALL BE: PHASE A – BLACK, PHASE B – RED, PHASE C – BLUE, NEUTRAL – WHITE, GROUND – GREEN. FOR UNGROUNDED 277/480 VOLT SYSTEMS: PHASE A – BROWN, PHASE B – ORANGE, PHASE C – YELLOW, NEUTRAL – GREY, GROUND – GREEN FOR 277/480 VOLT SYSTEMS.

E. CONDUCTORS SHALL MEET THE LATEST REQUIREMENTS OF NEMA AND IPCEA AND SHALL BE THIRD PARTY TESTING AGENCY APPROVED.

F. FEEDER CONDUCTORS SHALL BE CONTINUOUS WITHOUT SLICE FROM SOURCE TO LOAD, UNLESS SPLICING IS SPECIFICALLY APPROVED BY THE ARCHITECT/ENGINEER. KEEP BRANCH CIRCUIT CONDUCTOR SPLICES TO A MINIMUM. ALL BRANCH CIRCUIT CONDUCTORS SHALL BE CONTINUOUS WITHOUT SPLICE BETWEEN JUNCTION, OUTLET, DEVICE BOXES, ETC., UNLESS NOTED OTHERWISE. HOMERUNS SHALL BE CONTINUOUS FROM THE LAST OUTLET BOX TO THE SERVING PANELBOARD. NO SPLICING WILL BE PERMITTED IN PANELBOARD CABINETS, SAFETY SWITCHES, ETC. WHERE REQUIRED AND PERMITTED, INSTALL SPLICES AND TAPES THAT POSSESS EQUIVALENT OR BETTER MECHANICAL STRENGTH AND INSULATION RATINGS THAN CONDUCTORS BEING SPLICED. USE SPLICE AND TAP CONNECTORS COMPATIBLE WITH CONDUCTOR MATERIAL.

G. INSTALL CONDUCTORS AT EACH OUTLET WITH AT LEAST 6 INCHES OF SLACK. CONNECT OUTLETS AND COMPONENTS TO WIRING AND TO GROUND AS INDICATED AND INSTRUCTED BY THE MANUFACTURER.

H. DO NOT PULL CONDUCTORS UNTIL THE CONDUIT SYSTEM IS COMPLETE IN EVERY DETAIL. IN THE CASE OF CONCEALED WORK, "COMPLETE" MEANS UNTIL ALL ROUGH PLASTERING OR MASONRY HAS BEEN COMPLETED.

I. WHERE SIZE IS NOT SHOWN ON THE DRAWINGS, BRANCH CIRCUITS SHALL CONSIST OF #12 AWG OR #10 AWG MINIMUM PHASE, NEUTRAL AND EQUIPMENT GROUND CONDUCTORS IN 1/2" MINIMUM RACEWAY. REFER TO THE "MINIMUM CONDUCTORS SIZE CHART" ON THE DRAWINGS AND INCREASE CONDUCTORS SIZES AS REQUIRED TO MAINTAIN A MAXIMUM OF 3% VOLTAGE DROP.

J. COMMON NEUTRAL BRANCH CIRCUITS ARE NOT PERMITTED. PROVIDE SEPARATE, INDIVIDUAL NEUTRAL CONDUCTORS FOR ALL BRANCH CIRCUITS.

K. MC CABLE SHALL BE SUPPORTED IN STRAIGHT LINES USING APPROVED SUPPORTING MEANS AND IN COMPLIANCE WITH THE NEC. DEDICATED SUPPORT WIRES MAY BE USED ABOVE FINISHED CEILINGS AND SHALL BE PAINTED RED PRIOR TO INSTALLATION. DO NOT SUPPORT CABLE WITH CEILING GRID SUPPORTS WIRES. DO NOT DRAPE CABLE OVER CEILINGS, LIGHTING FIXTURES, CONDUIT, DUCTWORK, PIPING OR EQUIPMENT.

L. DO NOT COMBINE BRANCH CIRCUIT HOMERUNS UNLESS SPECIFICALLY INDICATED ON THE DRAWINGS.

M. DO NOT CHANGE CIRCUITING SHOWN WITHOUT PERMISSION OF THE ARCHITECT/ENGINEER.

N. TROUGH TAPS SHALL BE AT SWITCH/CIRCUIT BREAKER AMPACITY, UNLESS NOTED OTHERWISE.

O. TRENCHING: DIRECT BURIED RACEWAYS SHALL BE 24" DEEP TO THE TOP OF THE RACEWAY.

P. TRENCH IN COMPLIANCE WITH LOCAL CODES AND REGULATIONS. BACKFILL TO 95% COMPACTION AND RESOD GRASSED AREAS TO MATCH EXISTING.

Q. MARKER TAPE: ALL UNDERGROUND CONDUCTORS SHALL BE IDENTIFIED BY UNDERGROUND LINE MARKING TAPE LOCATED DIRECTLY ABOVE THE CONDUCTORS AT 6 TO 8 INCHES BELOW FINISHED GRADE. TAPE SHALL BE PERMANENT, BRIGHT–COLORED, CONTINUOUS FOIL BACKING SUITABLE FOR USE WITH METAL DETECTION DEVICES, FOR DIRECT BURIAL NOT LESS THAN 8 INCHES AND 4 MILS THICK. PRINTED LEGEND SHALL BE INDICATIVE OF TYPE OF UNDERGROUND LINE BELOW.

260526 GROUNDING

A. THE NEUTRAL OF EACH SECONDARY ELECTRICAL DISTRIBUTION SYSTEM SHALL BE GROUNDED AT ONE POINT ONLY WHICH SHALL BE AT THE MAIN DISCONNECTING DEVICE. FROM THE MAIN DISCONNECTING DEVICE, A COPPER GROUNDING CONDUCTOR SIZED IN ACCORDANCE WITH THE NEC SHALL BE EXTENDED TO THE WATER SYSTEM SHALL BE WITHIN 6 INCHES OF THE ENTRANCE OF THE PIPE INSIDE THE BUILDING OR STRUCTURE. WHERE DIELECTRIC UNIONS ARE USED IN THE WATER PIPING SYSTEM, THE GROUNDING CONNECTION SHALL BE MADE ON THE "STREET SIDE" OF THE FIRST SUCH UNION IN THE SYSTEM. A BONDING JUMPER THE SAME WIRE SIZE AS THE GROUNDING CONDUCTOR SHALL BE INSTALLED ACROSS THE WATER PIPING CONNECTION SUCH THAT THE WATER METER MAY BE REMOVED WITHOUT INTERRUPTING THE GROUNDING SYSTEM CONTINUITY. WHERE NO METALLIC DOMESTIC WATER PIPING SYSTEM EXISTS, THE EARTH ELEC

Electrical Specifications Continued

262416 PANELBOARDS

A. NEMA PB1, CIRCUIT BREAKER TYPE, LIGHTING AND APPLIANCE BRANCH CIRCUIT PANELBOARD WITH COPPER PHASE BUS, 100% COPPER GROUND AND NEUTRALS BUSES AND RATINGS AS INDICATED. PROVIDE 200% COPPER NEUTRAL BUS WHERE INDICATED. MINIMUM INTEGRATED SHORT CIRCUIT RATING: 10,000 AMPERES RMS SYMMETRICAL FOR 208 VOLT PANELBOARDS, OR AS INDICATED. CIRCUIT BREAKERS: NEMA AB 1, BOLT-ON TYPE. ENCLOSURE: NEMA PB 1, TYPE 1. CABINET BOX: 6 INCHES (153 MM) DEEP, 20 INCHES (508 MM) WIDE FOR 240 VOLT AND LESS PANELBOARDS. CABINET FRONT: FLUSH AND SURFACE CABINET FRONT DOOR-IN-DOOR TYPE WITH CONCEALED TRIM CLAMPS, CONCEALED HINGE, METAL DIRECTORY FRAME, AND FLUSH LOCK ALL KEYED ALIKE. FINISH IN MANUFACTURER'S STANDARD GRAY ENAMEL.
B. PANELBOARDS SHALL BE MANUFACTURED BY EATON, GENERAL ELECTRIC/ABB, SIEMENS OR SQUARE D.
C. PROVIDE TYPED CIRCUIT DIRECTORY FOR EACH BRANCH CIRCUIT PANELBOARD. FINAL TYPED PANELBOARD DIRECTORIES INSTALLED IN THE PANELBOARD DOOR POCKET SHALL INCLUDE FINAL ACTUAL ROOM NAMES AND NUMBERS IN ADDITION TO THE GENERAL DESCRIPTION SHOWN ON THE PANEL SCHEDULES ON THE DRAWINGS. REVISE DIRECTORY TO REFLECT CIRCUITING CHANGES REQUIRED TO BALANCE PHASE LOADS. GROUND AND BOND PANELBOARD ENCLOSURE ACCORDING TO SECTION 260553.

262726 WIRING DEVICES

A. PROVIDE HEAVY DUTY INDUSTRIAL SPECIFICATION GRADE RECEPTACLES AND SWITCHES. MATCH DEVICE COLOR TO EXISTING INSTALLED DEVICES. ALL DEVICES SHALL BE RATED 20 AMPERES. HUBBELL HBL 5362 AND HBL 1221/2/3/4, PASS AND SEYMOUR 5362A AND PS20AC1/2/3/4, OR LEVITON 5362 AND 1221/2/3/4.
B. PROVIDE 302 STAINLESS STEEL DEVICE PLATES.
C. PROVIDE SPECIFICATION GRADE GRAY COMBINATION USB CHARGER RECEPTACLES AS INDICATED. ALL DEVICES SHALL BE RATED 20 AMPERES. HUBBELL USB20ACSW OR EQUAL BY PASS AND SEYMOUR OR LEVITON. PROVIDE 302 STAINLESS STEEL DEVICE PLATES.

262727 OCCUPANCY SENSORS

A. OCCUPANCY SENSORS SHALL UTILIZE DUAL TECHNOLOGY SENSING. ACCEPTABLE TECHNOLOGY IS PASSIVE INFRARED (PIR), ULTRASONIC AND MICROPHONIC. DUAL TECHNOLOGY IS REQUIRED UTILIZING PIR AND ONE OF THE OTHER TECHNOLOGIES. SENSORS SHALL AUTOMATICALLY ADJUST TIME DELAYS AND SENSITIVITY BASED ON THE ACTIVITY LEVEL IN THE SPACE. ALL SWITCHES SHALL BE APPROVED BY A THIRD PARTY AGENCY, APPROVED FOR THE VOLTAGE AND CURRENT INDICATED. SENSORS SHALL BE COMPATIBLE WITH ALL LOAD TYPES AND REQUIRE NO MINIMUM LOAD.
B. WALL SWITCH LINE VOLTAGE SENSORS FOR SMALL AREAS: LINE VOLTAGE, SINGLE GANG, WALL MOUNTED OCCUPANCY SENSOR SWITCH WITH ONE OR TWO OVERRIDE SWITCHES AS SHOWN. SENSOR SHALL RECESS INTO SINGLE GANG SWITCH BOX AND FIT A STANDARD GFI RECEPTACLE PLATE OPENING. SWITCHES SHALL BE COMPATIBLE WITH STANDARD THREE AND FOUR-WAY TOGGLE SWITCHES. PROVIDE HARD LENS SWITCHES IN STORAGE ROOMS AND OTHER LOCATION SUBJECT TO ABUSE. ADJUSTABLE TIME DELAY OF 20 MINUTES, 180 DEGREE FIELD OF VIEW, MINIMUM COVERAGE AREA OF 900 SF. VOLTAGE: 120-277 VOLTS AC, MINIMUM LOAD RATING 800 WATTS AT 120 VAC, 1200 WATTS AT 277 VAC. LUTRON, SENSOR SWITCH OR WATTSTOPPER.
C. WALL SWITCH LOW VOLTAGE SENSORS FOR SMALL AREAS: LOW VOLTAGE, SINGLE GANG, WALL MOUNTED OCCUPANCY SENSOR 0-10V DIMMER SWITCH WITH ONE OR TWO OVERRIDE SWITCHES AS SHOWN. SENSOR SHALL RECESS INTO SINGLE GANG SWITCH BOX AND FIT A STANDARD GFI RECEPTACLE PLATE OPENING. SWITCHES SHALL BE COMPATIBLE WITH STANDARD THREE AND FOUR-WAY TOGGLE SWITCHES. PROVIDE HARD LENS SWITCHES IN STORAGE ROOMS AND OTHER LOCATION SUBJECT TO ABUSE. ADJUSTABLE TIME DELAY OF 20 MINUTES, 180 DEGREE FIELD OF VIEW, MINIMUM COVERAGE AREA OF 900 SF. VOLTAGE: 120-277 VOLTS AC, MINIMUM LOAD RATING 800 WATTS AT 120 VAC, 1200 WATTS AT 277 VAC. LUTRON, SENSOR SWITCH OR WATTSTOPPER.
D. CEILING MOUNTED LOW VOLTAGE SENSORS FOR LARGE AREAS: LOW VOLTAGE, RECESS CEILING MOUNTED OCCUPANCY SENSOR SWITCH SHALL OPERATE IN CONJUNCTION WITH A LINE VOLTAGE POWER PACK TO CONTROL THE CONNECTED LIGHTING LOADS. SENSORS SHALL OPERATE ON A CLASS 2, THREE-CONDUCTOR CABLE SYSTEM. MULTIPLE SENSORS SHALL BE CONNECTABLE TO A SINGLE POWER PACK. SENSOR SHALL RECESS INTO A TWO GANG OUTLET BOX. ADJUSTABLE TIME DELAY OF 1 - 15 MINUTES. POWER PACKS SHALL BE RATED 20A AT 120-277 VOLTS AND SHALL BE COMPATIBLE WITH ALL LOAD TYPES. THEY SHALL HAVE THE CAPACITY TO POWER ADDITIONAL REMOTE HEADS OR ADDITIONAL RELAYS. LUTRON, SENSOR SWITCH OR WATTSTOPPER.

262816 SAFETY SWITCHES

A. NEMA KS 1, TYPE HD WITH EXTERNALLY OPERABLE HANDLE INTERLOCKED (DEFEATABLE) TO PREVENT OPENING FRONT COVER WITH SWITCH IN ON POSITION, ENCLOSED LOAD INTERRUPTER KNIFE SWITCH. MECHANISMS SHALL BE NON-TEASIBLE, POSITIVE, QUICK MAKE-QUICK BREAK TYPE. HANDLE LOCKABLE IN ON OR OFF POSITION. SWITCHES SHALL HAVE HANDLES WHOSE POSITIONS ARE EASILY RECOGNIZABLE IN THE ON OR OFF POSITION. FUSE CLIPS SHALL BE DESIGNED TO ACCOMMODATE NEMA FU1, CLASS R FUSES.
B. PROVIDE ACCESSORIES REQUIRED BY THEIR INSTALLATION. PROVIDE AUXILIARY SWITCH CONTACTS AS REQUIRED BY OTHER SYSTEMS. COORDINATE WITH OTHER DIVISIONS AS REQUIRED.
C. APPLY ADHESIVE TAG ON INSIDE DOOR OF EACH FUSED SWITCH INDICATING NEMA FUSE CLASS AND SIZE INSTALLED.
D. SAFETY SWITCHES SHALL BE MANUFACTURED BY EATON, GENERAL ELECTRIC/ABB, SIEMENS OR SQUARE D.

262817 CIRCUIT BREAKERS

A. ENCLOSED CIRCUIT BREAKERS SHALL BE MOLDED CASE, UL LISTED AND SHALL BE RATED AS SHOWN ON THE DRAWINGS WITH APPROPRIATE WITHSTAND RATINGS AND CURRENT LIMITING CHARACTERISTICS AS REQUIRED TO SAFELY FUNCTION AND PROTECT THE DISTRIBUTION SYSTEM. ACCESSORIES SHALL BE PROVIDED AS NOTED OR REQUIRED AND SHALL BE UL LISTED AND FIELD INSTALLABLE.
B. CIRCUIT BREAKERS SHALL BE MANUFACTURED BY EATON, GENERAL ELECTRIC/ABB, SIEMENS OR SQUARE D.

262213 ENGINE-GENERATOR SET

A. PACKAGED NATURAL GAS FUELED ENGINE-GENERATOR SET, 125 KW / 156.25 KVA MINIMUM STANDBY RATING, 120/208 VOLTS, THREE PHASE, 60 HERTZ WITH THE FOLLOWING FEATURES AND OPTIONS:
   1. WATER COOLED INLINE OR V TYPE, 1800 RPM, FOUR STROKE INTERNAL COMPRESSION ENGINE NEMA MG1, RECONNECTIBLE BRUSHLESS SYNCHRONOUS GENERATOR WITH BRUSHLESS EXCITER. GENERATOR SHALL BE REVOLVING FIELD TYPE, CLOSE COUPLED OR DIRECTLY COUPLED TO THE ENGINE FLYWHEEL.
   2. STANDARD E-G SET CONTROL PANEL WITH AUTOMATIC SHUTDOWNS AND ALARMS.
   3. MOLDED CASE OUTPUT CIRCUIT BREAKER.
   4. SOUND ATTENUATED, WEATHER-PROTECTIVE ENCLOSURE: UL2200 LISTED, NON WALK-IN, REINFORCED, 14 GAUGE MINIMUM ALUMINUM POWDER PAINTED HOUSING ALLOWING ACCESS TO CONTROL PANEL AND SERVICE POINTS, WITH TAMPER RESISTANT, LOCKABLE SIDE AND REAR DOORS AND PANELS. HARDWARE, LATCHES AND HINGES SHALL BE STAINLESS STEEL. INCLUDE FIXED LOUVERS, BATTERY RACK, AND SILENCER. SOUND ATTENUATION SHALL BE LEVEL II (MAXIMUM OF 73 DBA MAXIMUM AT 7 METERS). PROVIDE EXTERIOR OIL AND COOLANT DRAINS WITH INTERIOR VALVES. EXHAUST GASSES AND COOLING AIR SHALL BE DISCHARGED VERTICALLY. ENCLOSURES SHALL BE PRIMED AND FINISH PAINTED IN A COLOR AS SELECTED BY THE ARCHITECT. ROOF SHALL BE PEAKED TO ALLOW DRAINAGE OF RAIN WATER. UNIT SHALL HAVE SUFFICIENT GUARDS TO PREVENT ENTRANCE BY SMALL ANIMALS. HOUSING SHALL BE SUITABLY CONSTRUCTED TO WITHSTAND 150 MPH WIND LOADS.
   5. CRITICAL EXHAUST SILENCER.
   6. 12 OR 24 VOLT STARTING BATTERY AND BATTERY CHARGER.
   7. ALTERNATOR ANTI-CONDENSATION HEATER (120V).
   8. ENGINE BLOCK HEATER (208V).
   8. REMOTE ANNUNCIATOR PANEL, NFPA 110 COMPLIANT, SURFACE MOUNTED WHERE SHOWN ON THE DRAWINGS.
   8. REMOTE EMERGENCY STOP SWITCH: WEATHERPROOF, SURFACE WALL MOUNTED, UNLESS OTHERWISE INDICATED, ADJACENT TO THE ENGINE-GENERATOR SET WHERE SHOWN ON THE DRAWINGS AND LABELED WITH AN ENGRAVED LAMINATED PLASTIC NAMEPLATE "GENERATOR EMERGENCY STOP". PUSH BUTTON SHALL BE PROTECTED FROM ACCIDENTAL OPERATION.
   9. FUEL PIPING, VALVES AND PRESSURE REGULATORS AS REQUIRED.
   10. OWNER'S OPERATION/MAINTENANCE AND PARTS MANUALS (2 BOUND PRINTED SETS AND ONE SET ON A THUMB DRIVE).
   11. CUMMINS MODEL C125N6 OR EQUIVALENT BY CATERPILLAR, KOHLER OR PRE-APPROVED EQUAL.
B. *THE MINIMUM RATING OF THE ENGINE GENERATOR SET SPECIFIED IS ESTIMATED. THE CONTRACTOR SHALL PROVIDE AN ENGINE* GENERATOR SET CAPABLE OF SIMULTANEOUS STARTING AND CONTINUOUS OPERATION, WITH NO GREATER THAN TWENTY (20) PERCENT VOLTAGE DIP AND WITHOUT SET OVERLOAD, OF THE LOADS SHOWN IN PANELBOARD SCHEDULES ON THE DRAWINGS. PROVIDE DOCUMENTATION OF SET CAPACITY AND VOLTAGE DIP WITH SHOP DRAWINGS.
C. CONFORM TO REQUIREMENTS OF NFPA 70, NFPA 101 AND NFPA 110. EQUIPMENT SHALL BE UL 2200 LISTED.
D. SUBMITTALS:
   1. A COMPLETE BILL OF MATERIALS FOR ALL COMPONENTS.
   2. DIMENSIONED PLAN AND ELEVATION DRAWINGS OF THE ENGINE-GENERATOR SET.
   3. DIMENSIONED PLAN AND ELEVATION DRAWINGS OF THE GEN SET ENCLOSURE. PROVIDE DIMENSIONS FROM THE CENTERLINE OF THE TOP CONTROL PANEL SWITCH AND THE OUTPUT CIRCUIT BREAKER HANDLE(S).
   4. DIMENSIONED PLAN, DETAILS AND ELEVATION DRAWINGS AND PROPOSED MATERIALS OF THE ACCESS PLATFORM AND STAIRS, IF REQUIRED.
E. TESTING
   1. LOAD BANK TEST: PROVIDE A FULL LOAD TEST UTILIZING A PORTABLE TEST BANK FOR FOUR HOURS MINIMUM. TEST SHALL BE PERFORMED AT THE JOB SITE IN THE PRESENCE OF THE OWNER AND ARCHITECT/ENGINEER. EACH TEST SHALL INCLUDE ONE HOUR AT 50% LOAD, ONE HOUR AT 75% LOAD AND TWO HOURS AT 100% LOAD. UPON COMPLETION OF THE LOAD TEST, THE GENERATOR SHALL BE SHUT DOWN AFTER THE COOL DOWN PERIOD. THE GENERATOR SHALL THEN BE STARTED AND IMMEDIATELY UPON REACHING RATED RPM, 100% LOAD SHALL BE APPLIED TO DEMONSTRATE ONE STEP FULL LOAD CAPABILITY. THE CAPABILITY OF THE SYSTEM TO PICK UP FULL STANDBY SERVICE LOAD WITHIN 10 SECONDS OF POWER OUTAGE SHALL ALSO BE DEMONSTRATED. AFTER TESTING IS COMPLETE A COPY OF THE GENERATORS TEST REPORT SHALL BE SUBMITTED TO THE OWNER AND THE ARCHITECT/ENGINEER.
   2. TEST RESULTS SHALL RECORD THE FOLLOWING PARAMETERS IN 20 MINUTE INTERVALS DURING FOUR HOUR TEST: KILOWATTS, AMPERES, VOLTAGE, COOLANT TEMPERATURE, AMBIENT TEMPERATURE, FREQUENCY, OIL PRESSURE, FUEL FLOW.
   3. BUILDING LOADS TEST: FOLLOWING THE LOAD BANK TEST, START THE BUILDING LOAD TEST. SIMULATE POWER OUTAGE, INCLUDING OPERATION OF THE AUTOMATIC TRANSFER SWITCH, AUTOMATIC STARTING CYCLE, AND AUTOMATIC SHUTDOWN AND RETURN TO NORMAL, BY INTERRUPTING NORMAL SOURCE, AND DEMONSTRATE THAT SYSTEM OPERATES WITH ACTUAL BUILDING LOADS TO PROVIDE STANDBY POWER. TEST ALL ALARM AND SHUTDOWN CIRCUITS BY SIMULATING CONDITIONS. TEST DURATION SHALL BE ONE HOUR MINIMUM.
   4. TESTING FUEL WILL BE PROVIDED BY THE OWNER.
G. WARRANTY
   1. FACTORY AUTHORIZED START UP AND TESTING
   2. ONE YEAR STANDARD WARRANTY
   3. ONE YEAR QUARTERLY SERVICE CONTRACT WITH 24 HOUR SERVICE

263600 AUTOMATIC TRANSFER SWITCH

A. AUTOMATIC TRANSFER SWITCHES SHALL BE ELECTRICALLY OPERATED, MECHANICALLY HELD, CLOSED TRANSITION, GE/ZENITH, ASCO OR A SWITCH MANUFACTURED BY THE GENERATOR MANUFACTURER.
B. RATINGS: 400 AMPERES, 120/208 VOLTS, 3 PHASE, 3 POLE, 4 WIRE SOLID NEUTRAL (CONTINUOUS DUTY). INTERRUPTING CAPACITY: 600 PERCENT OF CONTINUOUS RATING. THREE CYCLE WITHSTAND CURRENT RATING SHALL BE AS DEFINED BY UL 1008. TRANSFER TIME: NOT TO EXCEED 1/6 SECOND.
C. AUTOMATIC TRANSFER SWITCHES AND ALL COMPONENTS SHALL BE DESIGNED, MANUFACTURED AND TESTED IN ACCORDANCE WITH THE LATEST APPLICABLE STANDARDS AS FOLLOWS:
   1. UL 1008 - TRANSFER SWITCHES
   2. UL 991 - TESTS FOR SAFETY-RELATED CONTROLS EMPLOYING SOLID-STATE DEVICES
   3. NFPA 70 - NATIONAL ELECTRICAL CODE
   4. NFPA 110 - EMERGENCY AND STANDBY POWER SYSTEMS
   5. NEMA ICS 10 - AC TRANSFER SWITCH EQUIPMENT
   6. IEEE 446 - RECOMMENDED PRACTICE FOR EMERGENCY AND STANDBY POWER SYSTEMS
D. TRANSFER SWITCHES SHALL BE CLOSED TRANSITION AND OPERATE IN A MAKE BEFORE BREAK FASHION. THE TRANSFER SWITCH LOGIC WILL LIMIT THE SOURCE PARALLEL TIME TO LESS THAN 100 MS. CLOSED TRANSITION TRANSFER SWITCHES SHALL INCLUDE A TIME DELAY UTILITY PARALLEL RELAY, EXTERNAL TO THE CONTROLLER, TO SHUNT TRIP THE SOURCE 1 BREAKER IN THE EVENT THAT THE TRANSFER SWITCH REMAINS CLOSED ON BOTH SOURCES FOR A PERIOD GREATER THAN .5-1 SECOND. CLOSED TRANSITION TRANSFER SWITCHES SHALL HAVE THE OPTION TO DEFAULT TO AN OPEN IN-PHASE AND/OR DELAYED TRANSITION.
E. ENCLOSURE TYPE: NEMA 1 WALL MOUNTED ENCLOSURE AS INDICATED. VENTILATION OPENINGS AND LOUVERS SHALL BE INTERNALLY PROTECTED WITH SCREEN MESH AND FILTER MATERIAL TO PRECLUDE THE ENTRANCE OF CONTAMINANTS INCLUDING DUST, INSECTS, RODENTS, ETC.
F. THE TRANSFER SWITCH MANUFACTURER SHALL BE RESPONSIBLE FOR PROVIDING THE COORDINATING WIRING DIAGRAMS SHOWING THE ELECTRICAL CONNECTIONS BETWEEN THE TRANSFER SWITCH AND THE ENGINE-GENERATOR SETS FOR USE BY THE E-G SET SERVICE PERSONNEL DURING INSTALLATION AND CHECKOUT OF THE EQUIPMENT.
G. CONSTRUCTION: TRANSFER SWITCHES SHALL BE RIGIDLY CONSTRUCTED TO CLOSE INTO AND WITHSTAND THE BOLTED FAULT CURRENT AVAILABLE AT THE SWITCH. ALL TRANSFER SWITCH COILS, SPRINGS, AND CONTROL ELEMENTS SHALL BE EASILY ACCESSED AND CONVENIENTLY REMOVABLE FROM THE FRONT OF THE TRANSFER SWITCH WITHOUT MAJOR DISASSEMBLY OR DISCONNECTION OF POWER CONDUCTORS. ALL FEEDER LUGS, RELAYS, TIMERS, CONTROL WIRING AND ACCESSORIES SHALL BE FRONT ACCESSIBLE. THE SWITCHING PANEL SHALL CONSIST OF COMPLETELY ENCLOSED CONTACT ASSEMBLIES AND A SEPARATE CONTROL OR TRANSFER PANEL. CONTROL POWER FOR ALL TRANSFER OPERATIONS SHALL BE DERIVED FROM THE LINE SIDE OF THE SOURCE TO WHICH THE LOAD IS BEING TRANSFERRED. MAIN CONTACTS SHALL BE OF SILVER ALLOY COMPOSITION
H. CONTROLS: MICROPROCESSOR TYPE WITH DIGITAL DISPLAY AND USER CONTROL SWITCHES, FRONT PANEL MOUNTED. PROVIDE WITH RECHARGEABLE BATTERY BACKUP, SERIAL COMMUNICATIONS PORT, NON-VOLATILE EPROM STORING SETUP AND CALIBRATION DATA, SELF -DIAGNOSTICS, ETC. THE CONTROLLER SHALL BE HARDENED AGAINST POTENTIAL PROBLEMS FROM TRANSIENTS AND SURGES. OTHER TRANSFER SWITCH CONTROLLER ADDITIONAL FUNCTIONS SHALL BE AS FOLLOWS:
   1. IN-PHASE MONITOR: INHIBIT TRANSFER UNTIL SOURCE AND LOAD ARE WITHIN 15 ELECTRICAL DEGREES.
   2. ENGINE EXERCISER: FULLY PROGRAMMABLE, SOLID STATE TYPE. START ENGINE EVERY 7 DAYS (PROGRAMMABLE); RUN FOR 30 MINUTES (PROGRAMMABLE) BEFORE SHUTTING DOWN. BYPASS EXERCISER CONTROL IF NORMAL SOURCE FAILS DURING EXERCISING PERIOD. PROVIDE LOAD/NO-LOAD SWITCH.
L. TESTING: DEMONSTRATION AND OPERATION OF TRANSFER SWITCH IN NORMAL AND EMERGENCY MODES.
M. MAINTENANCE SERVICE: PROVIDE SERVICE AND MAINTENANCE OF TRANSFER SWITCHES FOR ONE YEAR FROM DATE OF SUBSTANTIAL COMPLETION.
N. WARRANTY: AUTOMATIC TRANSFER SWITCHES AND ASSOCIATED EQUIPMENT SHALL BE WARRANTED BY THE MANUFACTURER FOR A PERIOD OF 5 YEARS FROM THE DATE OF FINAL INSPECTION AND ACCEPTANCE. THE WARRANTY SHALL INCLUDE ALL PARTS, LABOR (INCLUDING TRAVEL), EXPENSES AND EQUIPMENT NECESSARY TO PERFORM REPLACEMENT AND REPAIR.

264313 SURGE PROTECTION DEVICES

A. PROVIDE EXTERNALLY MOUNTED SURGE PROTECTION DEVICES (SPDS) AS SHOWN. SPDS SHALL BE AS MANUFACTURED BY EATON, GENERAL ELECTRIC/ABB, SIEMENS OR SQUARE D.
B. SPDS SHALL COMPLY WITH UL 1449, 4TH EDITION, HAVE A SHORT-CIRCUIT CURRENT RATING COMPLYING WITH UL 1449, AND MATCHING OR EXCEEDING THE SERVICE EQUIPMENT SHORT-CIRCUIT RATING, METAL-OXIDE VARISTORS, FABRICATION USING BOLTED COMPRESSION LUGS FOR INTERNAL WIRING, INTEGRAL DISCONNECT SWITCH, LED INDICATOR LIGHTS FOR POWER AND PROTECTION STATUS OF EACH PHASE, NEUTRAL AND NEUTRAL-GROUND, AUDIBLE ALARM, WITH SILENCING SWITCH INDICATING WHEN PROTECTION HAS FAILED, FORM-C CONTACTS RATED AT 5A AND 250VAC, ONE NORMALLY OPEN AND ONE NORMALLY CLOSED, FOR REMOTE MONITORING OF PROTECTION STATUS. CONTACTS SHALL REVERSE ON FAILURE OF ANY SURGE DIVERSION MODULE OR ON OPENING OF ANY CURRENT-LIMITING DEVICE, SIX-DIGIT TRANSIENT EVENT COUNTER WITH RESET BUTTON AND NONVOLATILE MEMORY TOTALIZING TRANSIENT SURGES.
C. MAIN CIRCUIT BREAKER SPD SHALL HAVE A PEAK SINGLE-IMPULSE SURGE CURRENT RATING OF 200 KA PER MODE/400 KA PER PHASE. PANELBOARD SPD SHALL HAVE A PEAK SINGLE-IMPULSE SURGE CURRENT RATING OF 200 KA PER MODE/400 KA PER PHASE.
D. PROTECTION MODES AND UL 1449 SVR FOR 208Y/120VAC, 3-PHASE, 4-WIRE GROUNDED WYE CIRCUITS SHALL BE:
   1. LINE TO NEUTRAL: 400 VAC.
   2. LINE TO GROUND: 400 VAC.
   3. NEUTRAL TO GROUND: 400 VAC.
E. INSTALL SPD AT SERVICE ENTRANCE EQUIPMENT ON LOAD SIDE, WITH GROUND LEAD BONDED TO SERVICE ENTRANCE GROUND. INSTALL SPD WITH CONDUCTORS OR BUSES BETWEEN SUPPRESSOR AND POINTS OF ATTACHMENT AS SHORT AND STRAIGHT AS POSSIBLE. DO NOT EXCEED MANUFACTURER'S RECOMMENDED LEAD LENGTH. DO NOT BOND NEUTRAL AND GROUND. SPD CIRCUIT BREAKER AND FEEDER CONDUCTORS SHALL BE AS RECOMMENDED BY THE DEVICE MANUFACTURER, OR #8 AWG COPPER, WHICHEVER IS GREATER. INSTALL IN METALLIC RACEWAY. COORDINATE SPD CIRCUIT BREAKER RATING WITH ACTUAL SPD PROVIDED.
F. DO NOT ENERGIZE OR CONNECT ELECTRICAL EQUIPMENT TO THEIR SOURCES UNTIL SPDS ARE INSTALLED AND CONNECTED.
G. DO NOT PERFORM INSULATION RESISTANCE TESTS OF THE DISTRIBUTION WIRING EQUIPMENT WITH THE SDP INSTALLED. DISCONNECT BEFORE CONDUCTING INSULATION RESISTANCE TESTS, AND RECONNECT IMMEDIATELY AFTER THE TESTING IS COMPLETED.
H. WARRANTY PERIOD: TEN (10) YEARS FULL REPLACEMENT WARRANTY FROM DATE OF SUBSTANTIAL COMPLETION.

265100 LIGHTING FIXTURES

A. LIGHTING FIXTURE TYPES SHALL BE FURNISHED AS REQUIRED BY THE LIGHTING FIXTURE SCHEDULE AS INDICATED ON THE DRAWINGS.
B. ALL FIXTURES SHALL BE INSTALLED COMPLETE WITH LAMPS AND/OR LIGHT ENGINES.
C. LED SOURCES SHALL BE HIGH INTENSITY WHITE, SINGLE COLOR OR AS NOTED. PROVIDE WHITE LEDS IN THE COLOR TEMPERATURE(S) SPECIFIED. THE COLOR TEMPERATURE IN ALL FIXTURES OF THE SAME TYPE SHALL BE CONSISTENT AND REMAIN SO OVER THE LIFE OF THE FIXTURE. COLOR CONSISTENCY BETWEEN FIXTURES SHALL CONFORM TO ANSI NEMA ANSLG STANDARD C78.377-2008. FIXTURES EXHIBITING NOTICEABLE COLOR INCONSISTENT COLOR. MINIMUM LUMEN MAINTENANCE SHALL BE 70% OF RATED INITIAL LUMEN OUTPUT AT 50,000 HOURS OF OPERATION. MEASUREMENT OF LUMEN MAINTENANCE SHALL BE IN ACCORDANCE WITH IES LM-80-08. THE LUMINAIRE MANUFACTURER SHALL PROVIDE A MINIMUM OF FIVE YEAR WARRANTY FROM THE DATE OF FINAL ACCEPTANCE AGAINST PREMATURE FAILURE, DISCOLORATION AND DEFECTS. THE COLOR OR COLOR TEMPERATURE OF REPLACEMENT LEDS SHALL MATCH THOSE OF THE SAME LEDS TYPES THAT REMAIN IN OPERATION. THE MINIMUM COLOR RENDERING INDEX OF WHITE LEDS SHALL BE 80. ELECTRICAL AND PHOTOMETRIC PERFORMANCE OF LED ASSEMBLIES AND LUMINAIRES SHALL CONFORM TO IES LM 79-08.
D. LENSES SHALL BE CLEAR VIRGIN ACRYLIC MATERIAL WITH UNIFORM 3/16" SQUARE BASED FEMALE CONE PRISMS ALIGNED 45° TO THE LENGTH AND WIDTH OF THE LENS PANEL. MINIMUM PRISM DEPTH SHALL BE 0.156" AND A MINIMUM OVERALL PANEL THICKNESS OF 0.150" TO 0.160" INCHES.
E. LED DRIVERS: PROVIDE HIGH FREQUENCY ELECTRONIC TYPE WITH SECONDARY VOLTAGES MATCHING THOSE REQUIRED BY THE LED SOURCE THEY OPERATE. DRIVERS SHALL OPERATE WITHIN A 0° - 140F AMBIENT TEMPERATURE RANGE AND SHALL COMPLY WITH FCC CLASS A STANDARDS FOR EMI. MINIMUM DRIVER SPECIFICATIONS:
   1. POWER FACTOR ≥ 90%.
   2. EFFICIENCY ≥ 90%.
   3. CURRENT CREST FACTOR - 1.5 MINIMUM.
   4. TOTAL HARMONIC DISTORTION < 20%.
   5. RATED LIFE - 50,000 HOURS.
   MANUFACTURERS SHALL HAVE BEEN MANUFACTURING LED DRIVERS FOR AT LEAST TEN YEARS WITH A DOCUMENTABLE LOW FAILURE RATE. THE CONTRACTOR SHALL PROVIDE A WRITTEN WARRANTY AGAINST DEFECTS IN MATERIAL AND WORKMANSHIP, INCLUDING REPLACEMENT FOR FIVE YEARS FROM THE DATE OF FINAL ACCEPTANCE.
F. RELAMP LUMINAIRES THAT HAVE FAILED LAMPS AT SUBSTANTIAL COMPLETION. REPLACE LED MODULES IN WHICH MORE THAN 5% OF THE LEDS HAVE FAILED LAMPS AT FINAL ACCEPTANCE OF THE WORK.
G. THE CONTRACTOR SHALL VERIFY THE TYPE CEILINGS OR WALLS THE FIXTURE IS TO BE USED WITH AND SHALL PROVIDE COMPATIBLE MOUNTING ATTACHMENTS AND TRIM. PROVIDE ALL ACCESSORIES, OPTIONS AND/OR FIELD FABRICATED SHROUDS OR ADDITIONAL MATERIALS REQUIRED COMPLYING WITH ALL APPLICABLE CODES TO MAINTAIN THE CEILING FIRE RATING AS REQUIRED BY REGULATORY AUTHORITIES.

265200 EMERGENCY AND EXIT LIGHTING FIXTURES

A. EMERGENCY AND EXIT LIGHTING FIXTURES SHALL BE SELF-CONTAINED UNITS AUTOMATICALLY ACTIVATED WHEN THE LINE VOLTAGE DROPS BELOW 80% AND SHALL COMPLY WITH UL 924, NFPA 101 - LIFE SAFETY CODE, NFPA 70 - NEC AND THE NCSBC. LIGHTING FIXTURE TYPES SHALL BE FURNISHED AS REQUIRED BY THE LIGHTING FIXTURE SCHEDULE AS INDICATED ON THE DRAWINGS. CATALOG NUMBERS ARE PROVIDED AS A GUIDE TO THE DESIGN AND QUALITY OF FIXTURE DESIRED. EQUIVALENT DESIGNS AND EQUAL QUALITY FIXTURES OF OTHER MANUFACTURERS LISTED WILL BE ACCEPTABLE UPON APPROVAL OF THE ARCHITECT/ENGINEER. THE CONTRACTOR SHALL VERIFY FROM THE CONTRACT DRAWINGS THE TYPE CEILINGS OR WALLS THE FIXTURE IS TO BE USED WITH AND SHALL PROVIDE COMPATIBLE MOUNTING ATTACHMENTS AND TRIM. PROVIDE ALL ACCESSORIES OR ADDITIONAL MATERIALS REQUIRED TO MAINTAIN THE CEILING FIRE RATING AS REQUIRED BY REGULATORY AUTHORITIES.
B. ALL FIXTURES SHALL BE COMPLETELY SELF-CONTAINED, PROVIDED WITH MAINTENANCE FREE BATTERY, AUTOMATIC CHARGER AND OTHER FEATURES. THEY SHALL BE INSTALLED COMPLETE WITH LAMPS, BATTERIES, ETC. WHICH SHALL BE NEW AND UNUSED AT TIME OF FINAL INSPECTION OF THE PROJECT FOR ACCEPTANCE.
C. EMERGENCY LIGHTING (EGRESS) UNITS: UL924 EMERGENCY BATTERY POWER SUPPLY SUITABLE FOR INSTALLATION IN DRIVER COMPARTMENT OF LED LUMINAIRE. UNIT SHALL BE AUTOMATICALLY ACTIVATED WHEN LINE VOLTAGE DROPS BELOW 80 PERCENT.
D. ALL FIXTURES SHALL HAVE SELF-DIAGNOSTICS. ELECTRONICS SHALL AUTOMATICALLY, OR MANUALLY UPON DEMAND, CONDUCT SELF TEST ON BATTERY CONDITION (INCLUDING ACTUAL DISCHARGE), CHARGER, LAMPS AND INTERNAL WIRING INTEGRITY PER NEC AND NFPA AT PRESCRIBED INTERVALS. A PILOT LIGHT SHALL INDICATE THE UNIT IS CONNECTED TO AC POWER. PROVIDE TEST SWITCH AND VISUAL INDICATOR(S) OF UNIT OPERATIONAL CONDITION INCLUDING CHARGER STATUS, READY AND SERVICE CODE. TEST SWITCH SHALL SIMULATE OPERATION OF THE UNIT UPON LOSS OF AC POWER BY ENERGIZING LAMPS FROM THE BATTERY, AND ALSO EXERCISE THE TRANSFER RELAY.
E. WARRANTY: EACH UNIT SHALL BE WARRANTED FOR THREE YEARS. THE BATTERY SHALL HAVE AN ADDITIONAL TWO MORE YEARS PRO-RATED WARRANTY. WARRANTY SHALL DATE FROM THE DATE OF FINAL PROJECT ACCEPTANCE.

270510 TELECOM PATHWAYS

DATA OUTLETS SHALL BE PROVIDED AS SHOWN AND SHALL CONSIST OF A 4" SQUARE X 2 1/8" DEEP BOX WITH 3/4" MINIMUM CONDUIT TO THE ACCESSIBLE CEILING CAVITY. CABLING WILL BE INSTALLED BY THE CONTRACTOR.

271500 CABLING INFRASTRUCTURE

DATA OUTLETS SHALL BE PROVIDED AS SHOWN AND SHALL CONSIST OF RJ-45 JACKS. PROVIDE QUANTITY AS SHOWN CABLES FROM THE OUTLETS SHOWN TO THE PATCH PANELS ON THE RACK IN THE SERVER ROOM. COORDINATE EXACT CONNECTION DETAILS WITH THE OWNER.
A. ALL CABLE, EQUIPMENT, AND MATERIALS SHALL MEET APPLICABLE ANSI/TIA/EIA-568-B, NFPA 70 NATIONAL ELECTRICAL CODE (NEC) 70, INSTITUTE OF ELECTRICAL AND ELECTRONICS ENGINEERS (EEE) 802 AND UNDERWRITERS LABORATORY (UL) VERIFICATION PROGRAM STANDARDS. ALL CABLE EQUIPMENT AND MATERIALS SHALL BE MANUFACTURED BY FACILITIES THAT ARE INTERNATIONAL ORGANIZATION FOR STANDARDIZATION (ISO) 9001 REGISTERED AND CERTIFIED.
B. ALL MATERIALS SHALL BE PROVIDED BY A SINGLE MANUFACTURER.
C. HORIZONTAL CABLE SHALL BE CAT 6, IN ACCORDANCE WITH ANSI/TIA/EIA-568-B.2, FOUR-PAIR, 100-OHM, 24 AWG WITH DISTINCTIVE BLUE JACKET. CABLE SHALL HAVE CONTIGUOUS, 2-FOOT SEGMENT-LENGTH MARKERS PRINTED ON THE CABLE JACKET. THE MARKINGS SHALL ALSO SHOW THE APPLICABLE PERFORMANCE (CAT 6).
D. PATCH CABLES SHALL BE AS SPECIFIED ABOVE FOR HORIZONTAL CABLE EXCEPT WITH STRANDED CONDUCTORS. PROVIDE RJ-45 CONNECTORS ON BOTH ENDS WITH MOLDED BOOT STRAIN RELIEFS. PATCH CABLES SHALL BE WIRED IN ACCORDANCE WITH THE ANSI/TIA/EIA-568-B.2 SPECIFICATIONS AND BE CERTIFIED BY THE MANUFACTURER AS COMPLIANT WITH THE ANS

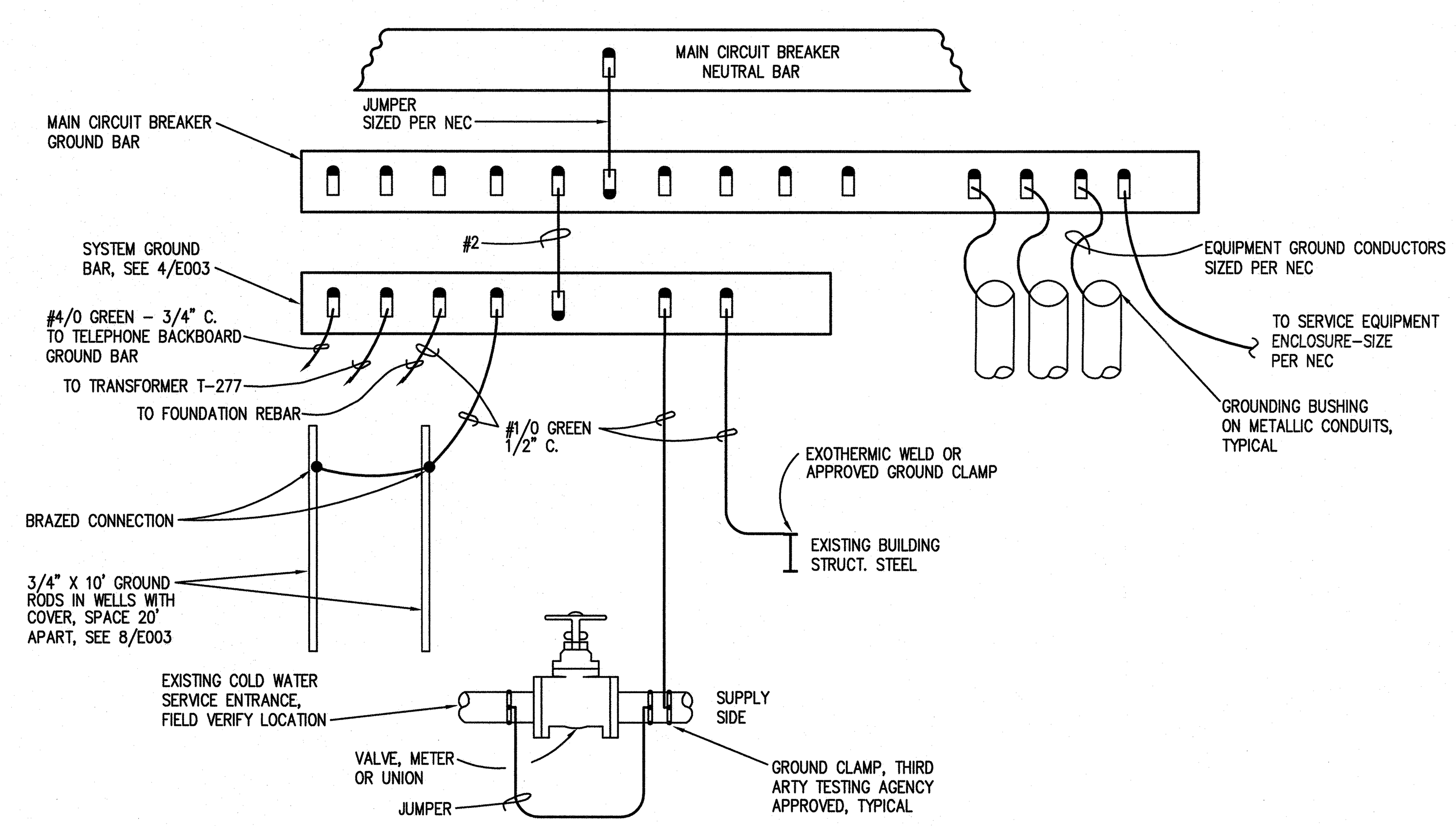

3 - Service Grounding System Detail
Not to Scale

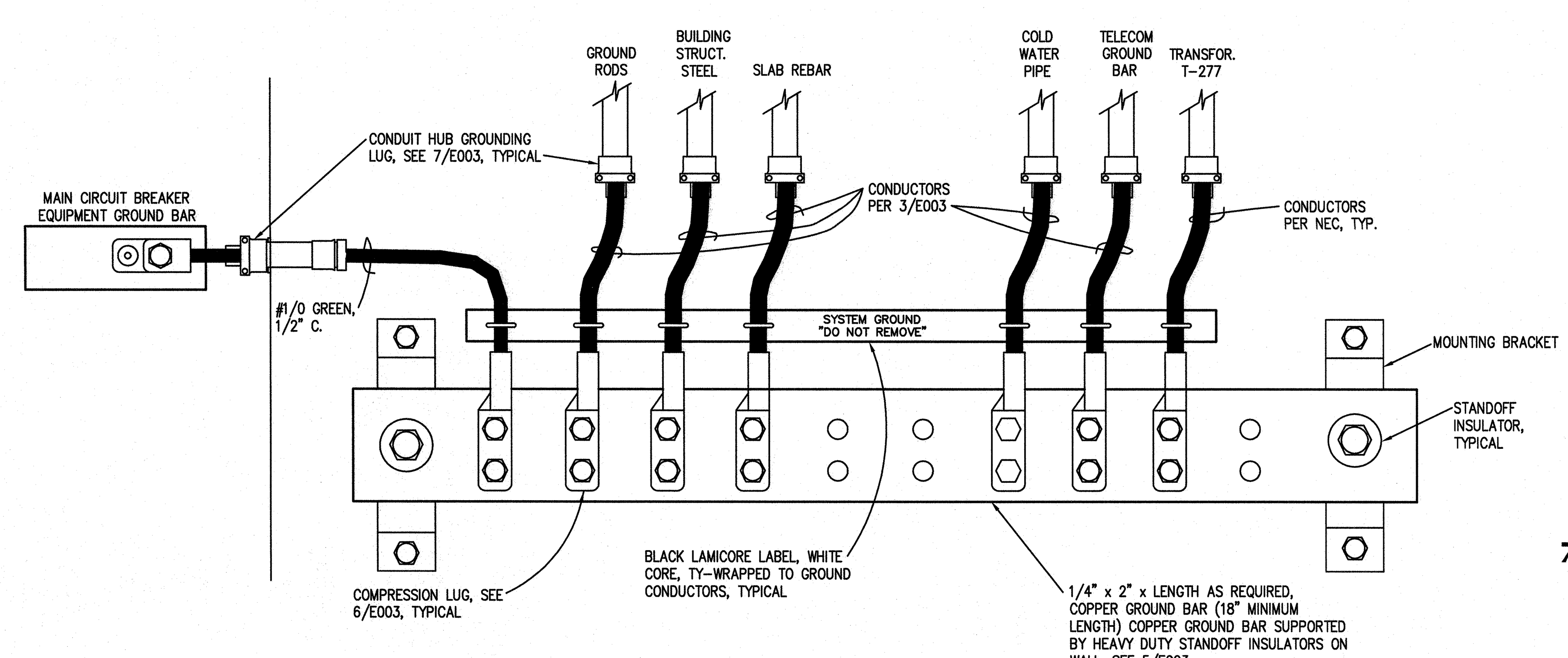

4 - System Ground Bar Detail
Not to Scale

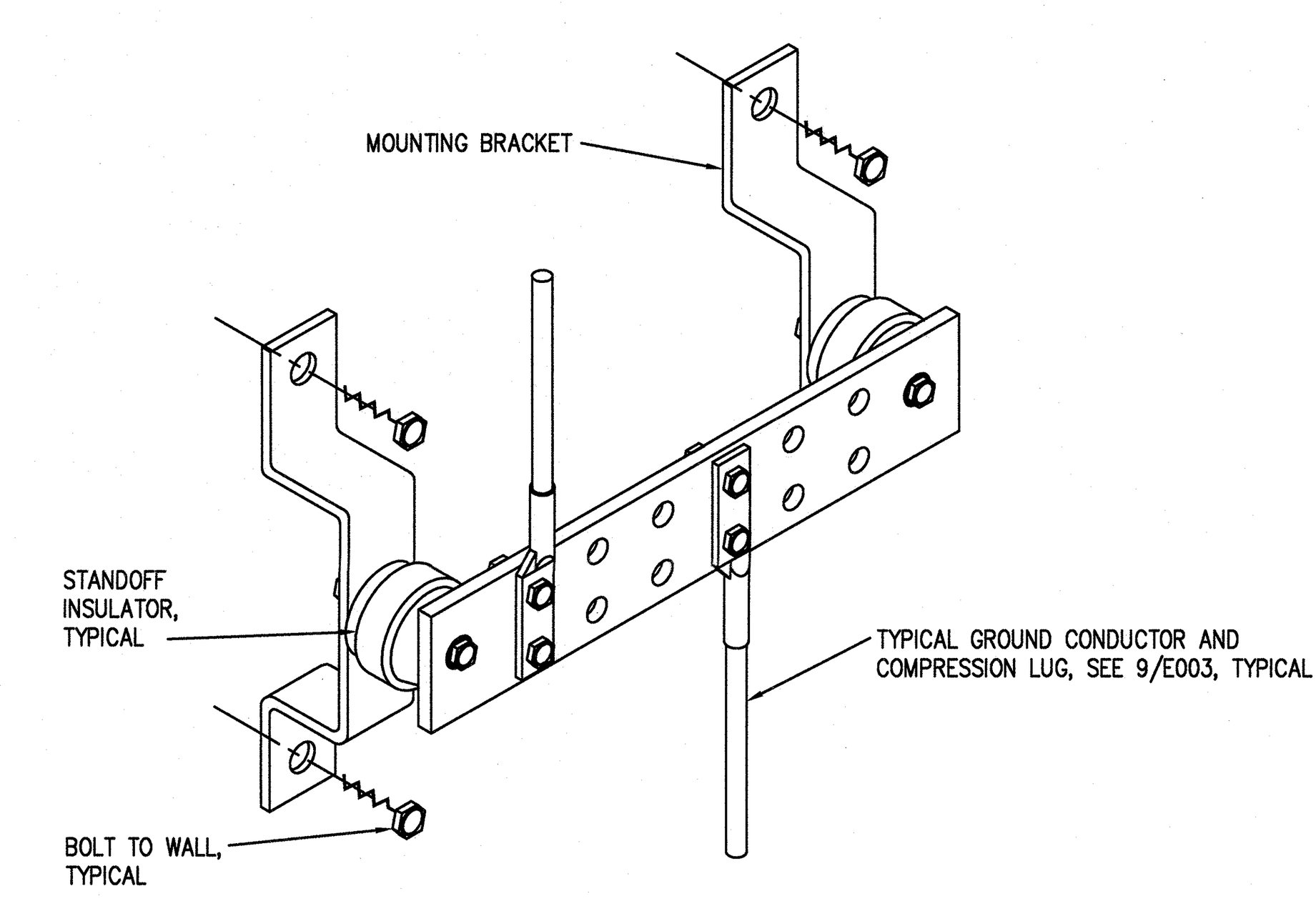

5 - Typical Ground Bar Mounting Detail
Not to Scale

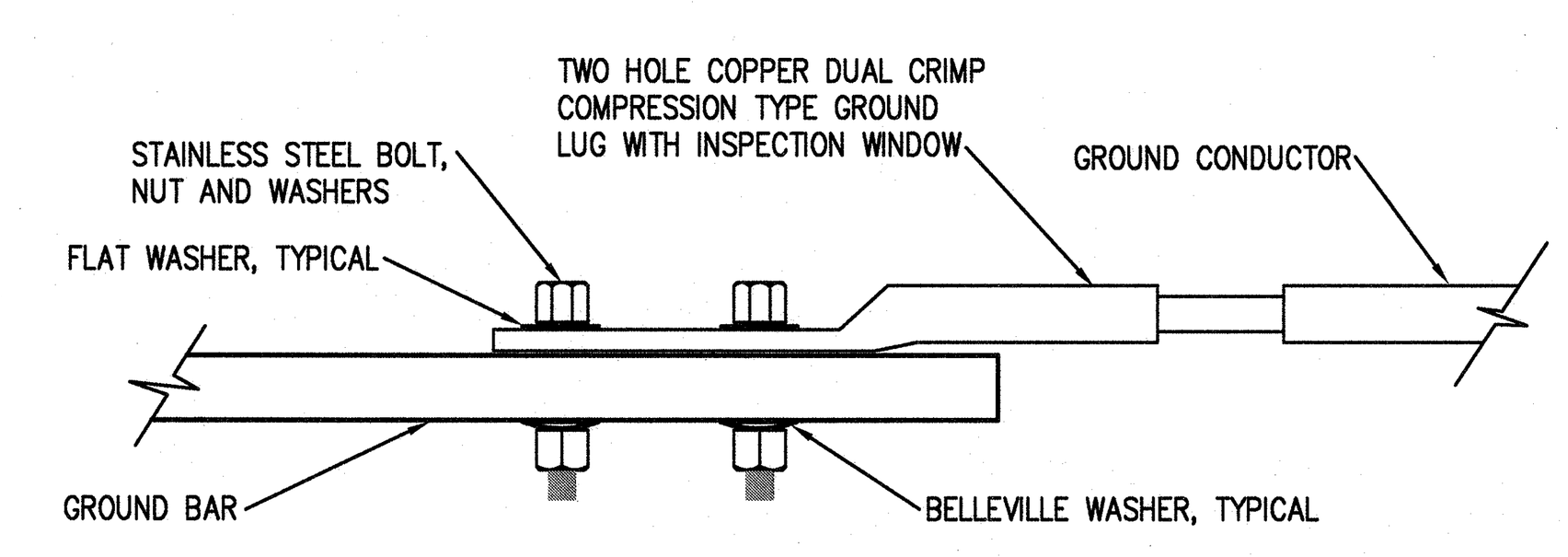

6 - Typical Ground Bar Connection Detail
Not to Scale

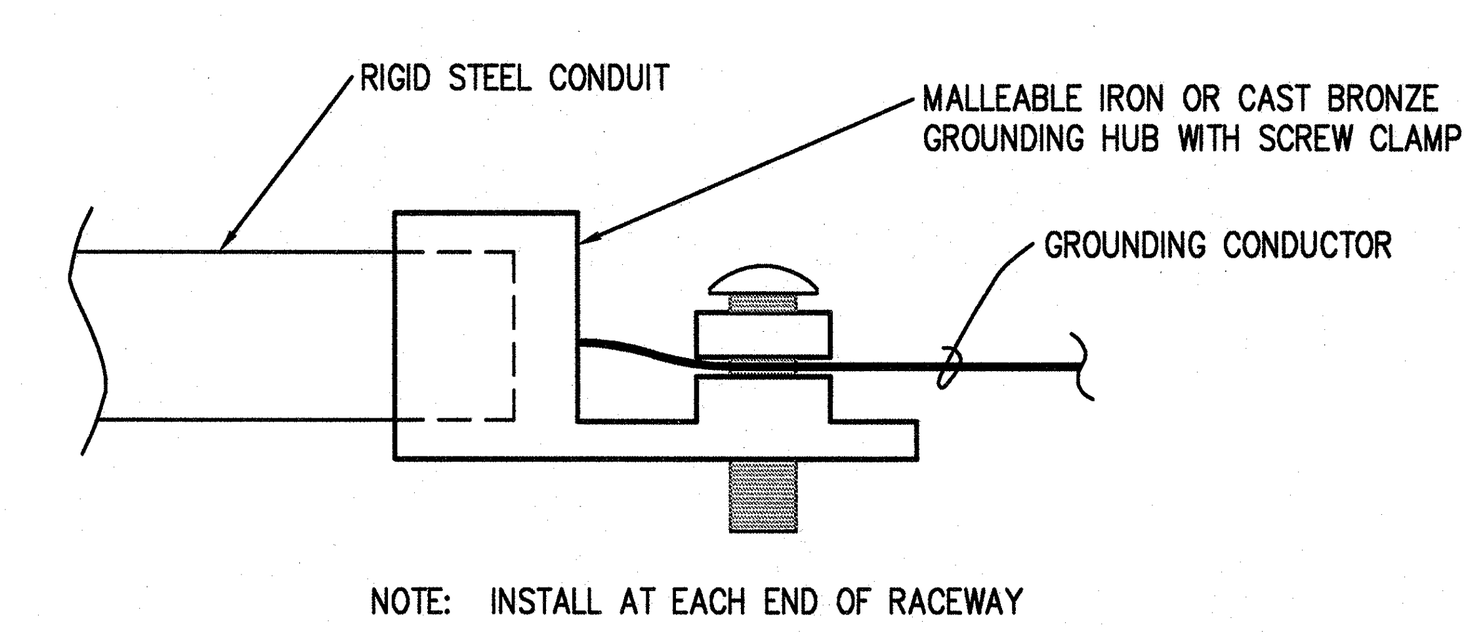

NOTE: INSTALL AT EACH END OF RACEWAY

7 - Conduit and Grounding Conductor Grounding Detail
Not to Scale

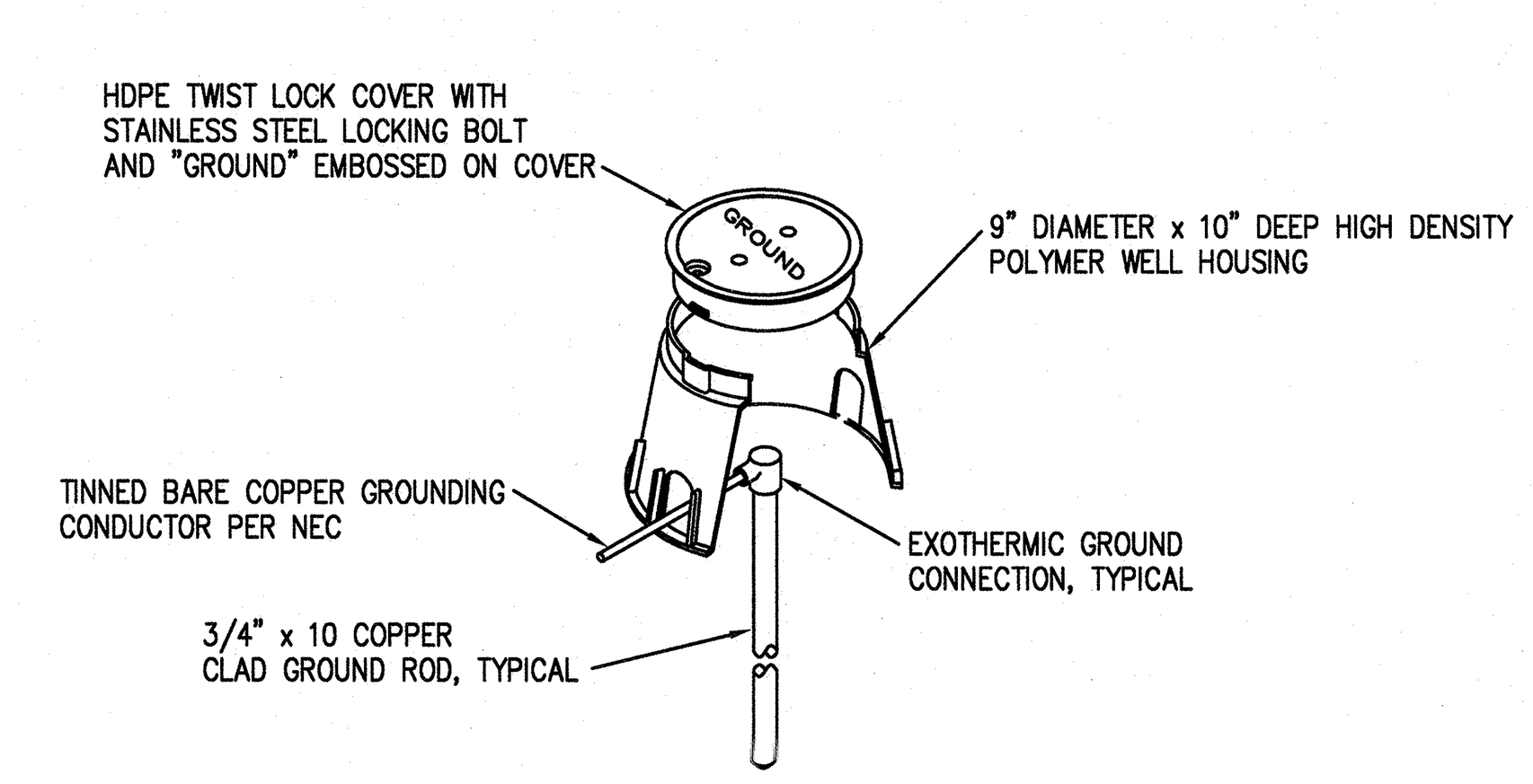

SEE SPECS. SECTION 260526

8 - Grounding Inspection Well Detail
NOT TO SCALE

Power Distribution System/Utilization Equipment Conductor Identification Table

ID#	MAX OCP	CONDUCTORS	CONDUIT SIZE
2 (12)	20	2#12 & 1#12 EG	1/4"
3 (12)	20	3#12 & 1#12 EG	1/4"
4 (12)	20	4#12 & 1#12 EG	1/4"
2 (10)	30	2#10 & 1#10 EG	1/4"
3 (10)	30	3#10 & 1#10 EG	1/4"
4 (10)	30	4#10 & 1#10 EG	1/4"
2 (8)	50	2#8 & 1#10 EG	1/4"
3 (8)	50	3#8 & 1#10 EG	3/4"
4 (8)	50	4#8 & 1#10 EG	1"
2 (6)	70	2#6 & 1#8 EG	1"
3 (6)	70	3#6 & 1#8 EG	1"
4 (6)	70	4#6 & 1#8 EG	1"
2 (4)	90	2#4 & 1#8 EG	1"
3 (4)	90	3#4 & 1#8 EG	1"
4 (4)	90	4#4 & 1#8 EG	1 1/4"
2 (3)	100	2#3 & 1#8 EG	1 1/4"
3 (3)	100	3#3 & 1#8 EG	1 1/4"
4 (3)	100	4#3 & 1#8 EG	1 1/4"
2 (2)	115	2#2 & 1#6 EG	1 1/4"
3 (2)	115	3#2 & 1#6 EG	1 1/4"
4 (2)	115	4#2 & 1#6 EG	1 1/4"
2 (1)	125	2#1 & 1#6 EG	1 1/4"
3 (1)	125	3#1 & 1#6 EG	1 1/4"
4 (1)	125	4#1 & 1#6 EG	1 1/4"
3 (1/0)	150	3#1/0 & 1#6 EG	1 1/4"
4 (1/0)	150	4#1/0 & 1#6 EG	2"
3 (2/0)	175	3#2/0 & 1#6 EG	2"
4 (2/0)	175	4#2/0 & 1#6 EG	2"
3 (3/0)	200	3#3/0 & 1#6 EG	2"
4 (3/0)	200	4#3/0 & 1#6 EG	2"
3 (4/0)	225	3#4/0 & 1#4 EG	2"
4 (4/0)	225	4#4/0 & 1#4 EG	2 1/4"
3 (250)	250	3#250 KCMIL & 1#4 EG	2 1/4"
4 (250)	250	4#250 KCMIL & 1#4 EG	2 1/4"
3 (300)	300	3#300 KCMIL & 1#4 EG	2 1/4"
4 (300)	300	4#300 KCMIL & 1#4 EG	3"
3 (350)	300	3#350 KCMIL & 1#3 EG	2 1/4"
4 (350)	300	4#350 KCMIL & 1#3 EG	3"
3 (400)	350	3#400 & 1#3 EG	2 1/4"
4 (400)	350	4#400 & 1#3 EG	3"
3 (500)	400	3#500 KCMIL & 1#3 EG	3"
4 (500)	400	4#500 KCMIL & 1#3 EG	3 1/4"

1. TABLE IS FOR THHN/THWN INSULATED COPPER CONDUCTORS USING 75°C RATING IN EMT ONLY. OTHER INSULATION AND RACEWAY TYPES MAY REQUIRE LARGER RACEWAYS AND ARE THE RESPONSIBILITY OF THE CONTRACTOR TO ASSURE CODE COMPLIANCE.
2. SOME DRY TYPE TRANSFORMER SECONDARY CONDUCTORS AND PARALLEL CONDUCTORS REQUIRE UPSIZED BONDING JUMPERS, UPSIZED EQUIPMENT GROUND CONDUCTORS AND LARGER RACEWAYS THAN SHOWN IN THIS TABLE.
3. OVERSIZED AND PARALLELED NEUTRAL CONDUCTORS MAY ALSO REQUIRE LARGER RACEWAYS THAN INDICATED.
4. CONDUIT SIZING IS CODE MINIMUM. LARGER SIZES MAY BE REQUIRED.
5. REFER TO THE CONDUCTORS IDENTIFICATION DETAIL FOR ADDITIONAL INFORMATION.
6. MAX OCP = MAXIMUM OCP DEVICE DESIGN AMPACITY

McFadyen Engineers, PLLC
4411 Peachtree Avenue Wilmington, NC 28403 Phone : 910.399.1125
© Copyright 2020 McFadyen Engineers, PLLC
NC# P-1010

MINIMUM CONDUCTORS SIZE CHART
PROVIDE THE FOLLOWING MINIMUM SIZES FOR BRANCH CIRCUIT CONDUCTORS:

SINGLE PHASE CIRCUITS

CONDUCTOR SIZE (AWG)	BRANCH CIRCUIT BREAKER TRIP (AMPERES)	CIRCUIT VOLTAGE MAXIMUM ALLOWABLE CIRCUIT LENGTH (FEET)			
		120	208	240	277
#12	15	81	141	163	188
#10	15	135	234	270	312
#8	15	204	355	409	473
#12	20	61	106	122	141
#10	20	101	175	202	233
#8	20	153	266	307	354
#10	30	67	117	135	155
#8	30	102	177	204	236

THREE PHASE CIRCUITS

CONDUCTOR SIZE (AWG)	BRANCH CIRCUIT BREAKER TRIP (AMPERES)	CIRCUIT VOLTAGE MAXIMUM ALLOWABLE CIRCUIT LENGTH (FEET)			
			208	240	480
#12	15		163	188	377
#10	15		270	312	624
#12	20		122	141	283
#10	20		202	234	468
#10	30		135	156	312
#8	30		205	236	473
#8	40		153	177	354
#6	40		239	276	553
#8	50		123	142	283
#6	50		191	221	442
#6	60		159	184	368
#4	60		245	283	567

NOTES:
1. CONDUCTOR LENGTHS ARE BASED ON SINGLE & THREE PHASE, 90% POWER FACTOR LOADS USING 75°C COPPER CONDUCTORS IN EMT RACEWAYS TO ACHIEVE NO MORE THAN 3 PERCENT VOLTAGE DROP.
2. CALCULATIONS ASSUME LOADS OF 80% OF CIRCUIT BREAKER TRIP (12A, 16A & 24A, 32A, 40A & 48A, RESPECTIVELY) ARE CONCENTRATED AT THE END OF THE CIRCUITS.
3. IF LOAD CHARACTERISTICS DIFFER FROM ABOVE, CALCULATE USING KNOWN CHARACTERISTICS AND SUBMIT CALCULATIONS TO THE ARCHITECT/ENGINEER DOCUMENTING 3% OR LESS VOLTAGE DROP UNDER THE ACTUAL LOAD CONDITIONS.
4. WHEN A DEDICATED SINGLE LOAD LESS THAN NOTED ABOVE IS KNOWN, THE CONTRACTOR MAY UTILIZE SMALLER CONDUCTORS UPON SUBMISSION OF VOLTAGE DROP CALCULATIONS DOCUMENTING 3% OR LESS VOLTAGE DROP. THE MINIMUM LOAD SHALL BE ASSUMED TO BE 60% OF THE CB TRIP RATING REGARDLESS OF ACTUAL DEDICATED LOAD.
5. USE THE LARGER OF THE CONDUCTORS INDICATED ON THE DRAWINGS OR THIS TABLE.

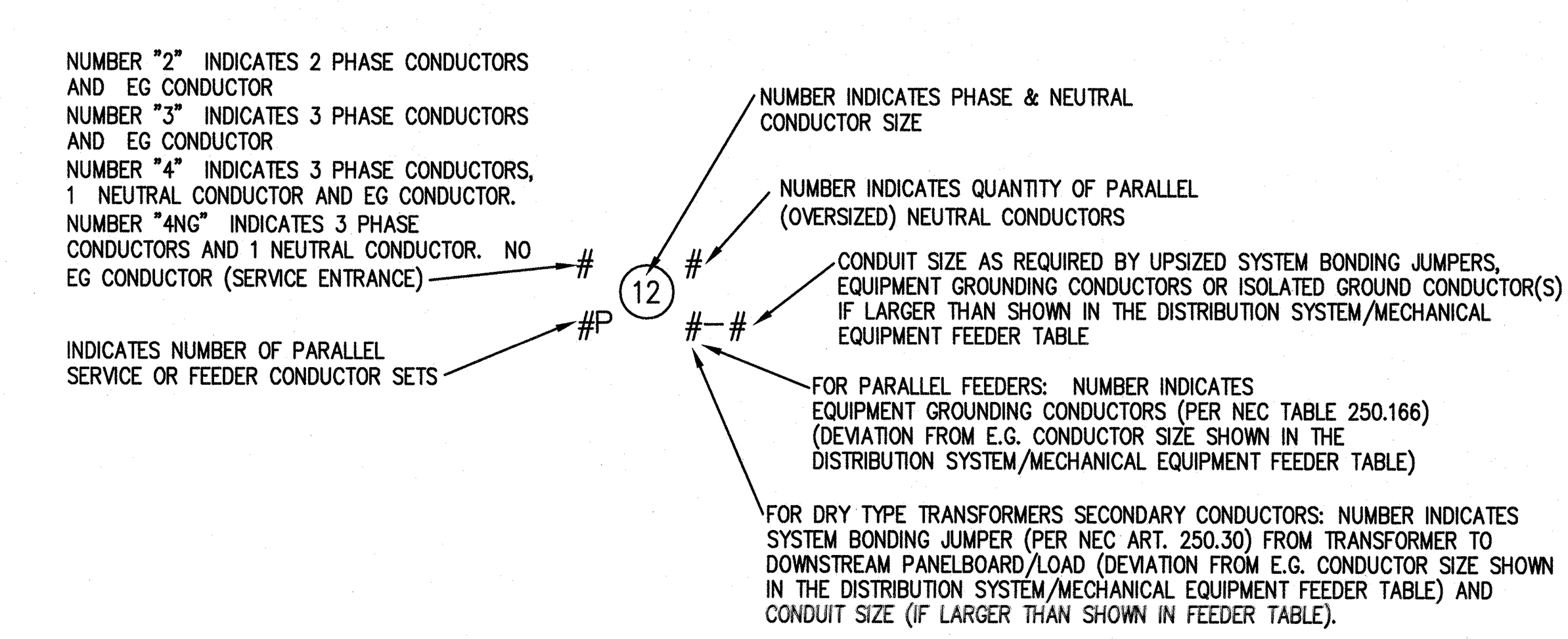

2 - Feeder Identification Detail
Not to Scale

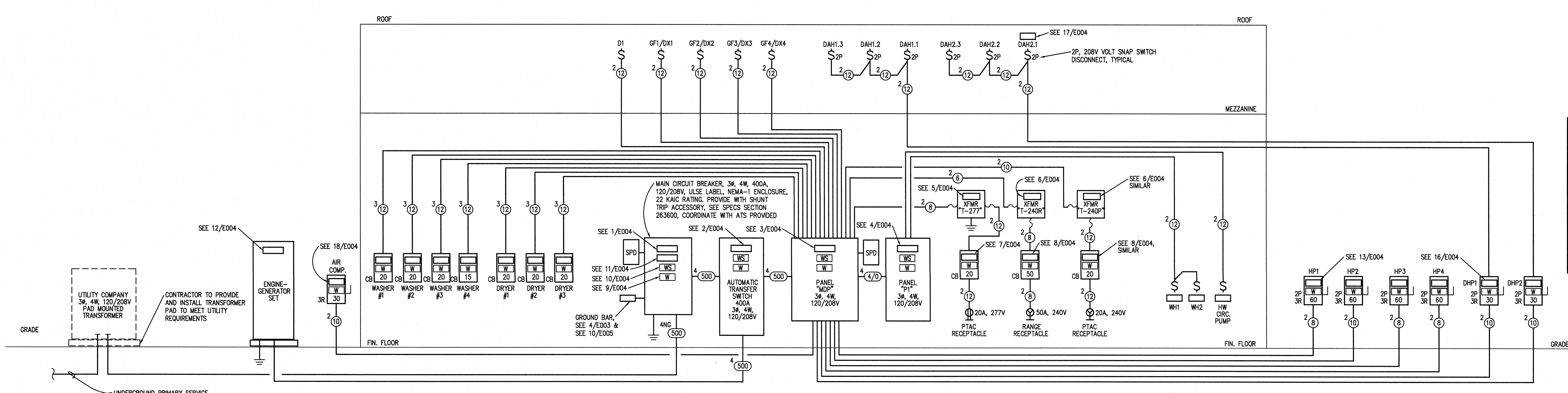

TRANSFORMER "T-277" – 5 KVA, 120:277V, SINGLE PHASE, WALL MOUNTED, DRY TYPE TRANSFORMER WITH 20A, SINGLE POLE, S/N, ENCLOSED CIRCUIT BREAKER AT THE TRANSFORMER SECONDARY, FEEDING A 277V RECEPTACLE, COORDINATE CONFIGURATION WITH OWNER

TRANSFORMER "T-240R" – 2.0 KVA, 120 x 240 :16/32V BUCK BOOST TRANSFORMER FOR 240V, SINGLE PHASE STOVE TESTING RECEPTACLE, 208V INPUT, 115°C RISE, 180°C INSULATION SYSTEM, ENCAPSULATED, WALL MOUNTED. PROVIDE 50A, 2 POLE, 240V ENCLOSED CIRCUIT BREAKER ON OUTPUT SIDE OF TRANSFORMER TO SERVE A STANDARD 50A STOVE RECEPTACLE, COORDINATE CONFIGURATION WITH OWNER

TRANSFORMER "T-240P" – 0.75 KVA, 120 x 240 : 16/32V BUCK BOOST TRANSFORMER FOR 240V, SINGLE PHASE PTAC TESTING RECEPTACLE. 208V INPUT, 115°C RISE, 180°C INSULATION SYSTEM, ENCAPSULATED, WALL MOUNTED. PROVIDE 20A, 2 POLE, 240V ENCLOSED CIRCUIT BREAKER ON OUTPUT SIDE OF TRANSFORMER TO SERVE A STANDARD 20A PTAC RECEPTACLE, COORDINATE CONFIGURATION WITH OWNER

1 - Power Riser Diagram
Not to Scale

BOWMAN MURRAY HEMINGWAY ARCHITECTS
514 Market Street
Wilmington, NC 28406
Tel - (910) 762-2621
Fax - (910) 762-8506

THE DAVIS COMMUNITY Central Services Center
1011 Porter's Neck Road
Wilmington, North Carolina 28411

REV.	DATE	DESCRIPTION

NO.	DATE	ISSUE NOTE
1	7-20-2020	PERMIT SET

Project Manager	Drawn By
WPJ	WPJ
Date	Reviewed By
July 20, 2020	RDM

Project ID

Sheet Title
Power Riser Diagram and Details

Sheet No.
E003

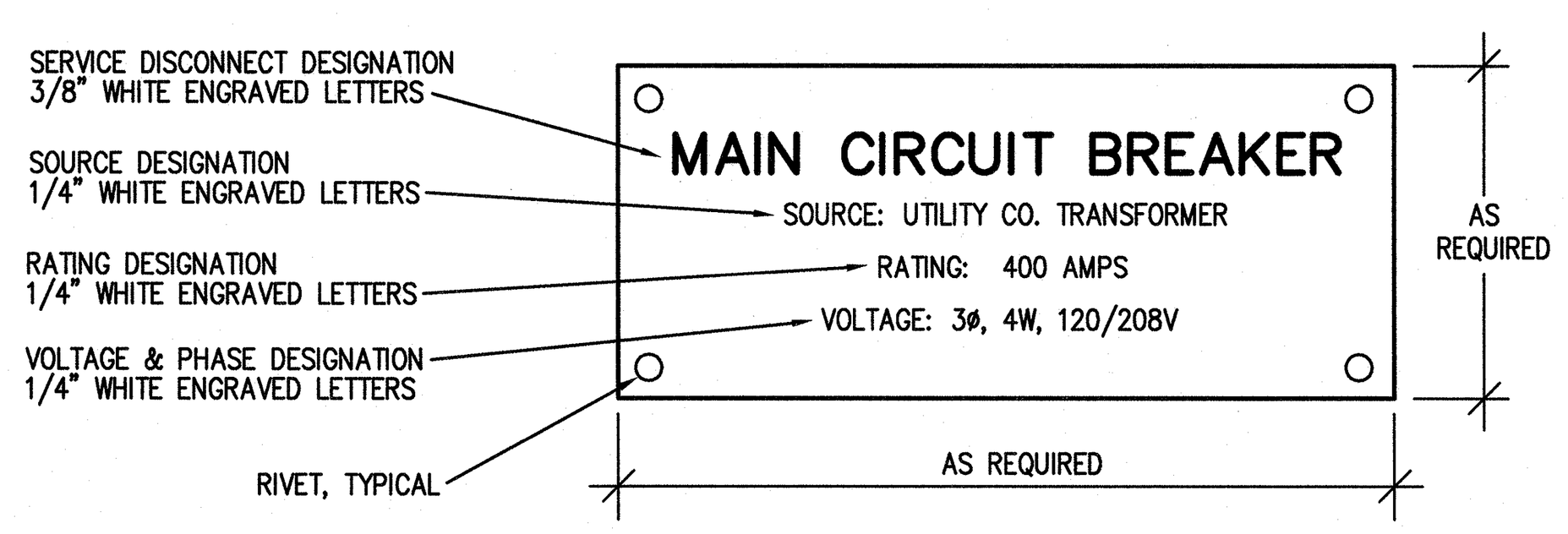

1 - Service Disconnect Nameplate Detail
Not to Scale

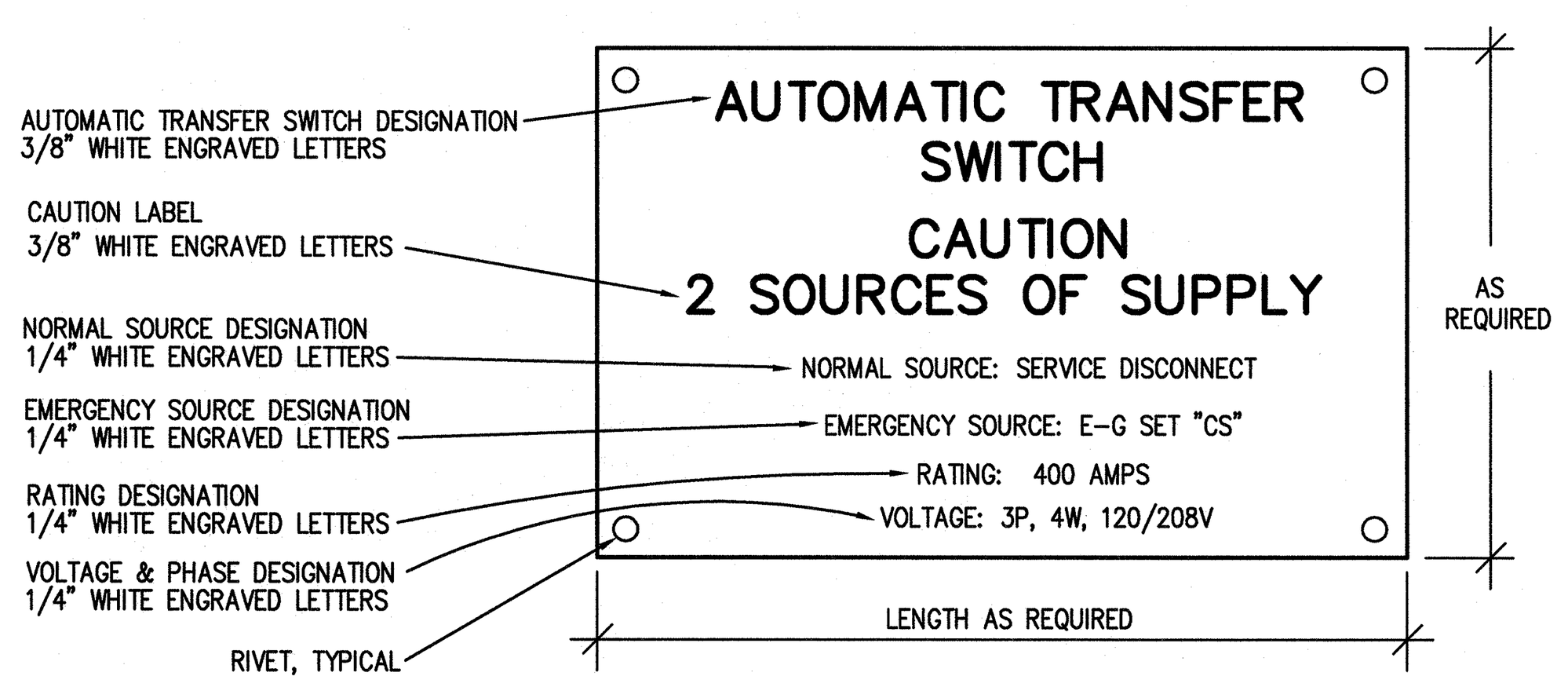

2 - Automatic Transfer Switch Nameplate Detail
NOT TO SCALE

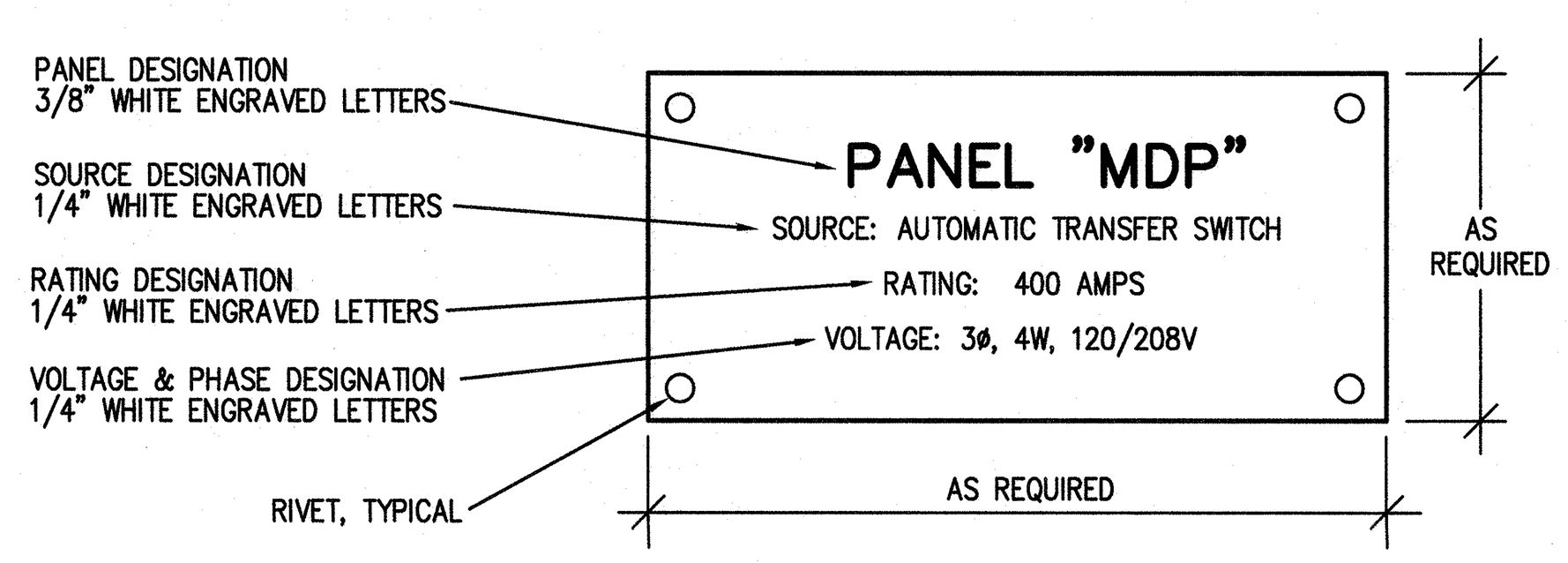

3 - Panelboard "MDP" Nameplate Detail
Not to Scale

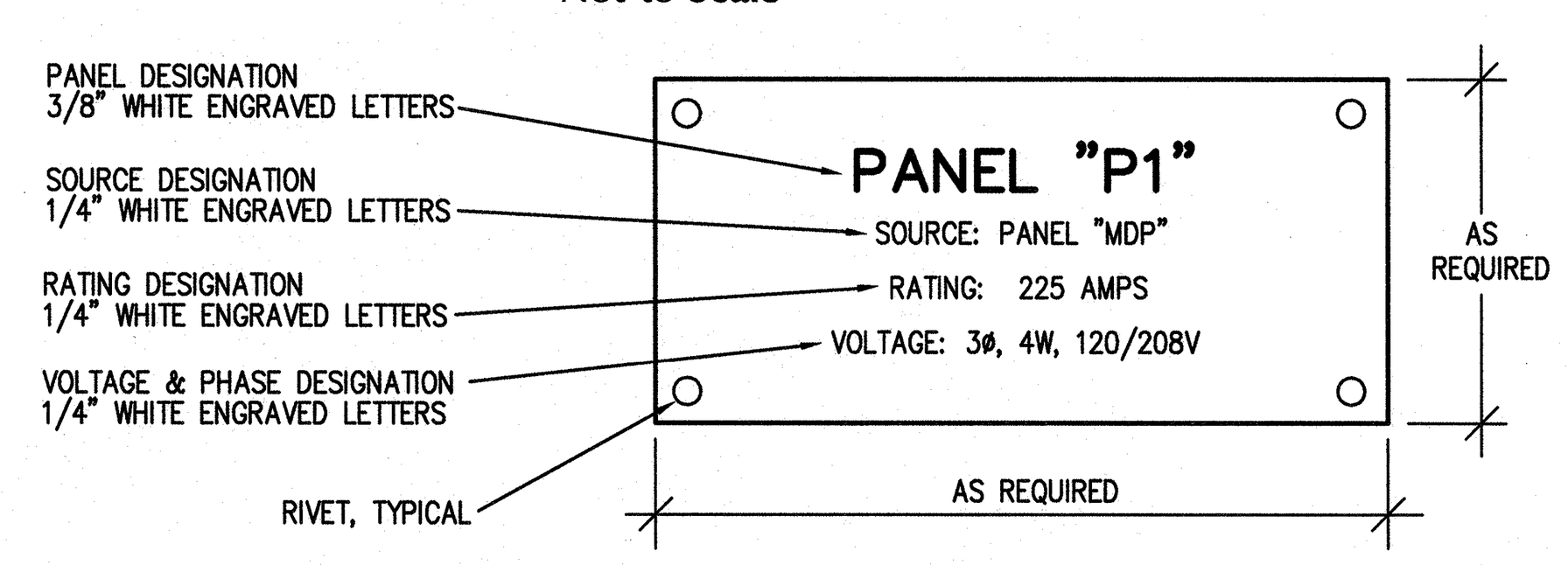

4 - Panelboard "P1" Nameplate Detail
Not to Scale

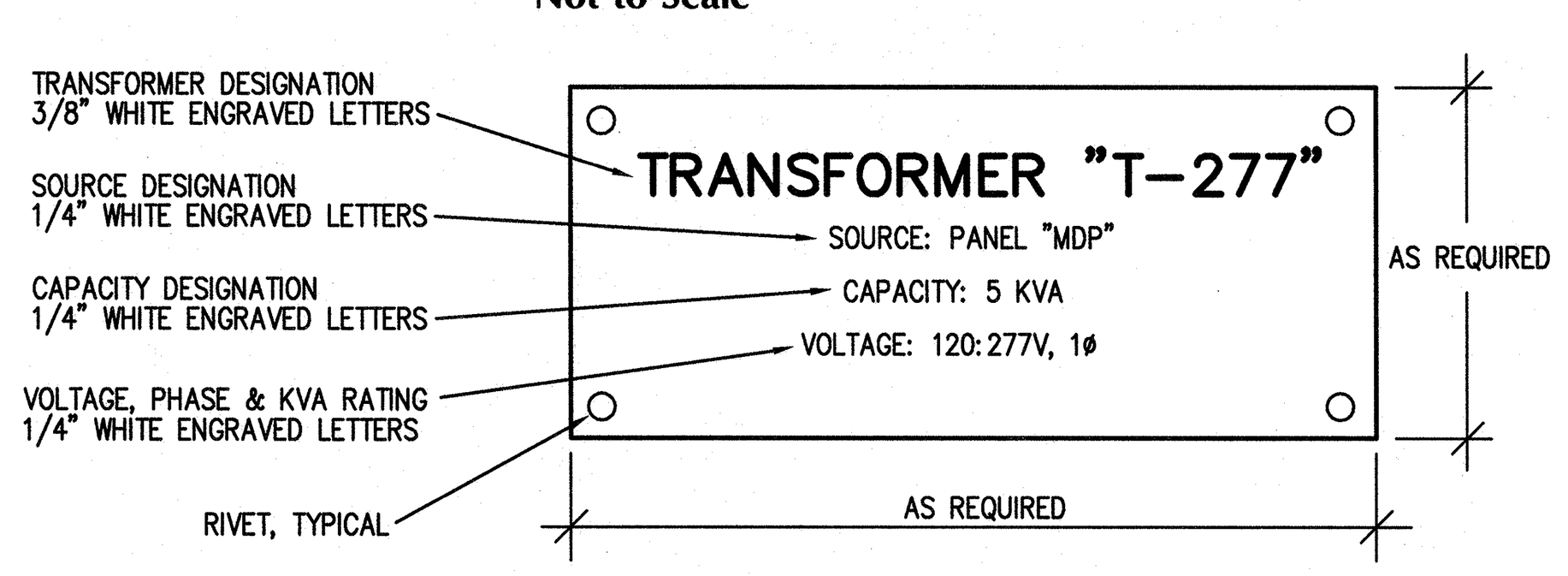

5 - Transformer "T-277" Nameplate Detail
Not to Scale

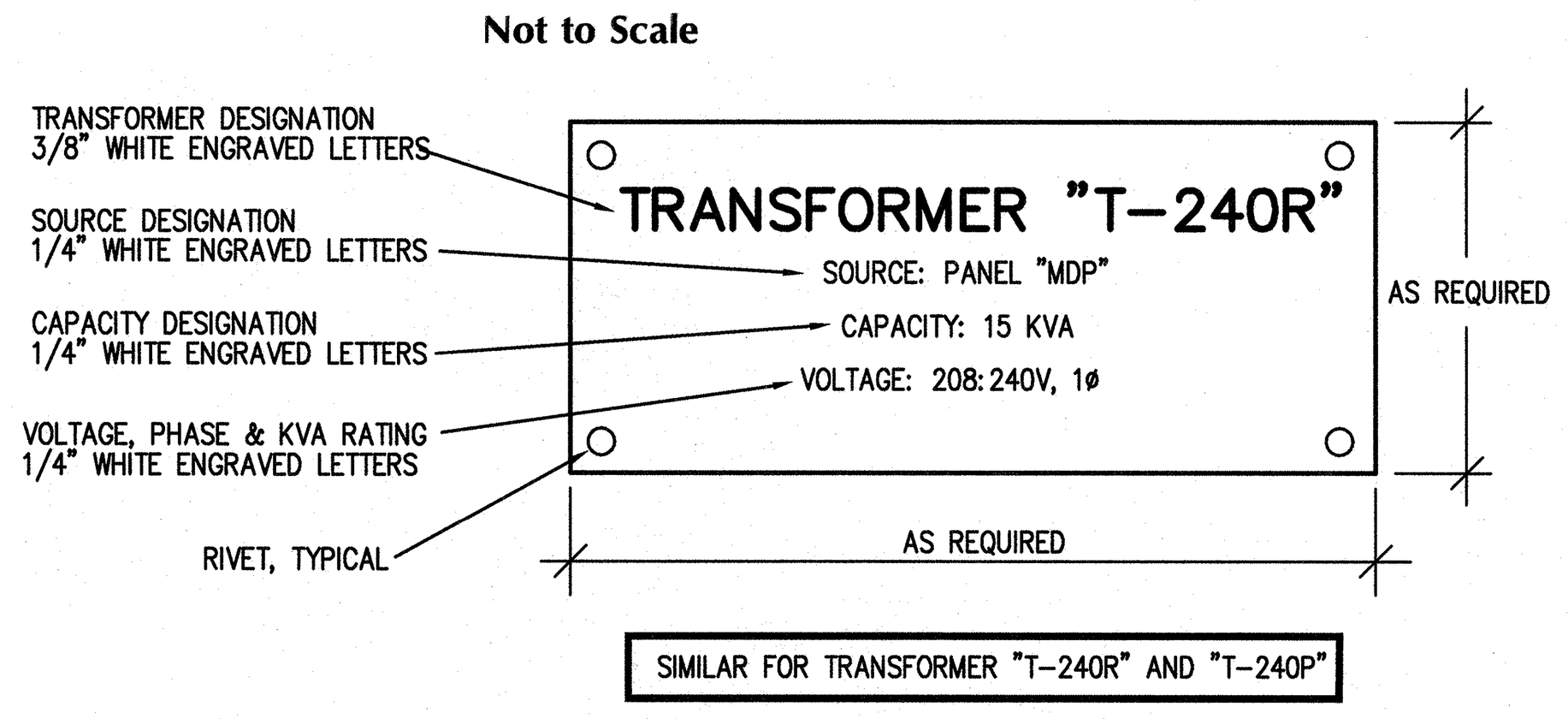

6 - Transformer "T-240R" Nameplate Detail
Not to Scale

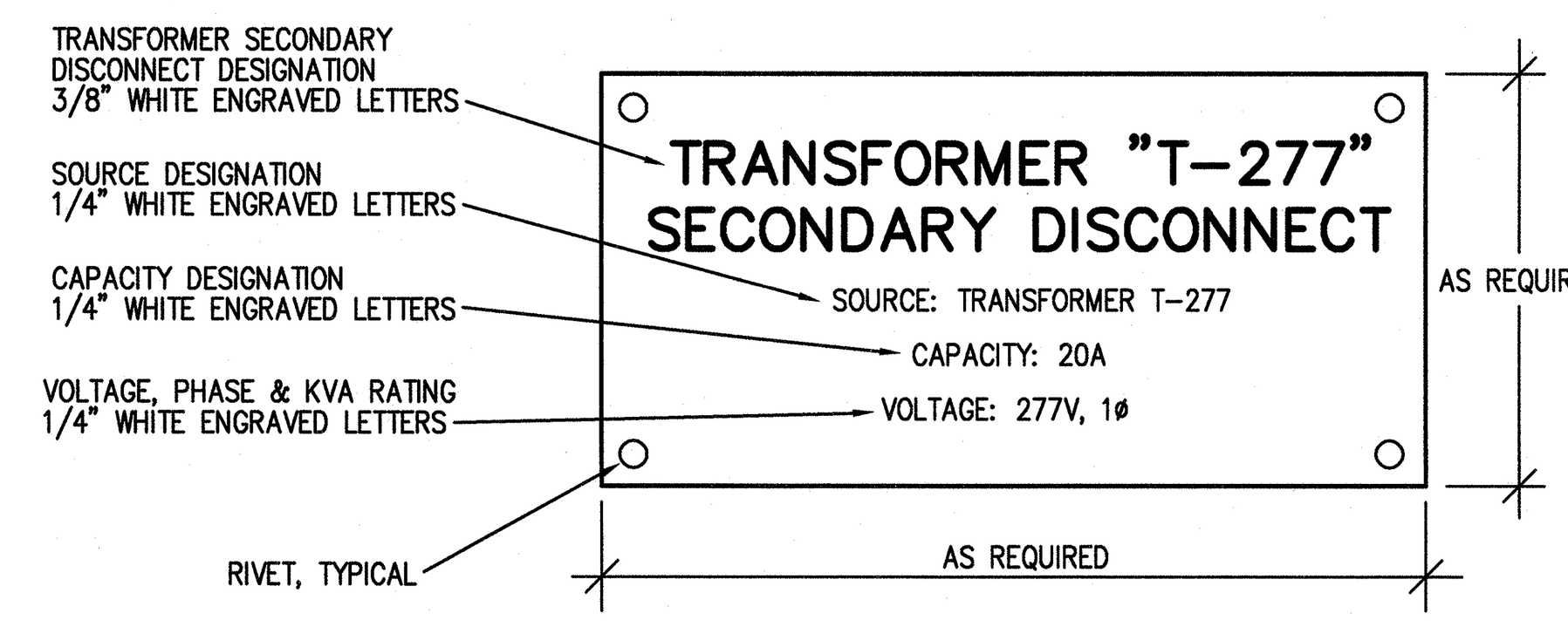

7 - Transformer "T-277" Secondary Disconnect Nameplate Detail
Not to Scale

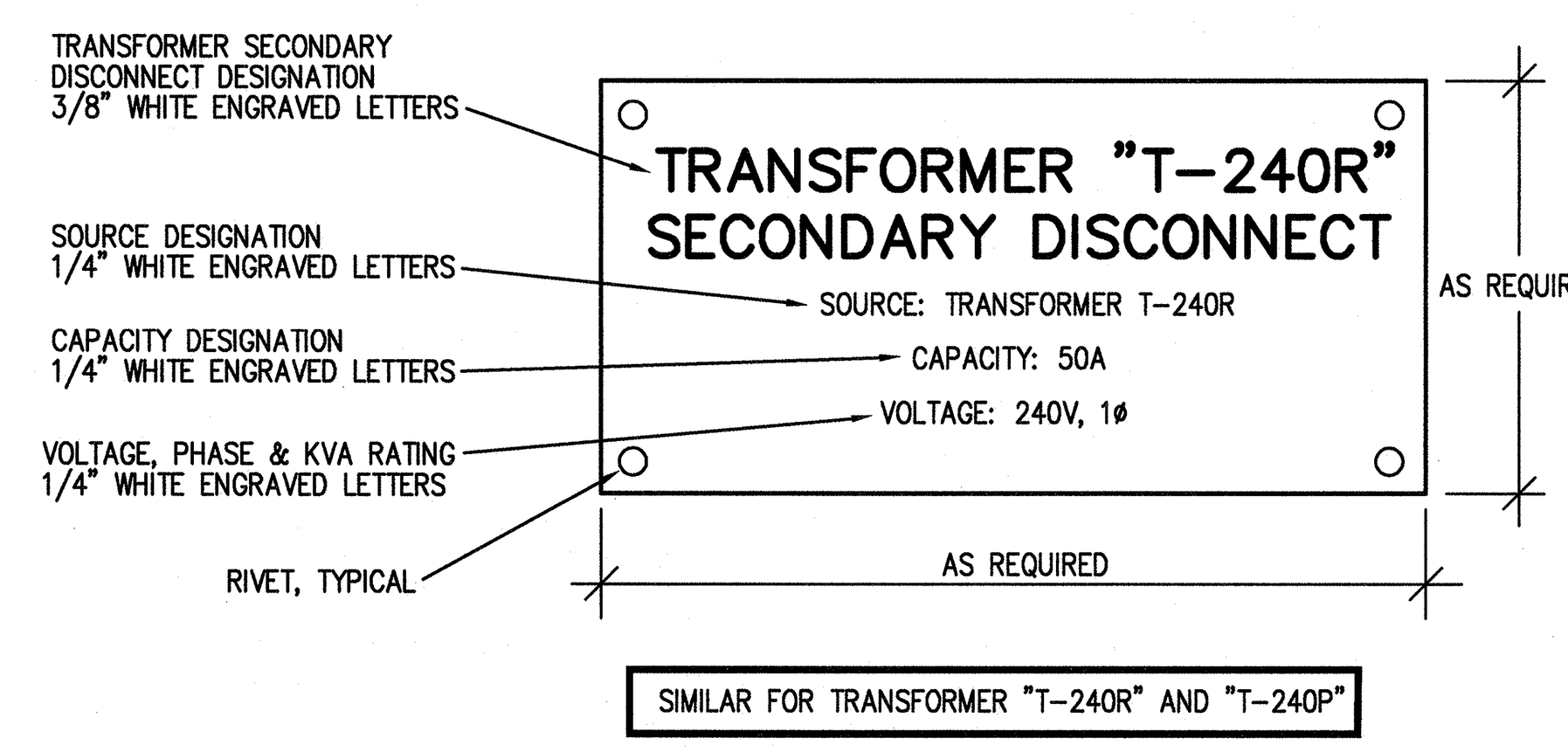

8 - Transformer "T-240R" Secondary Disconnect Nameplate Detail
Not to Scale

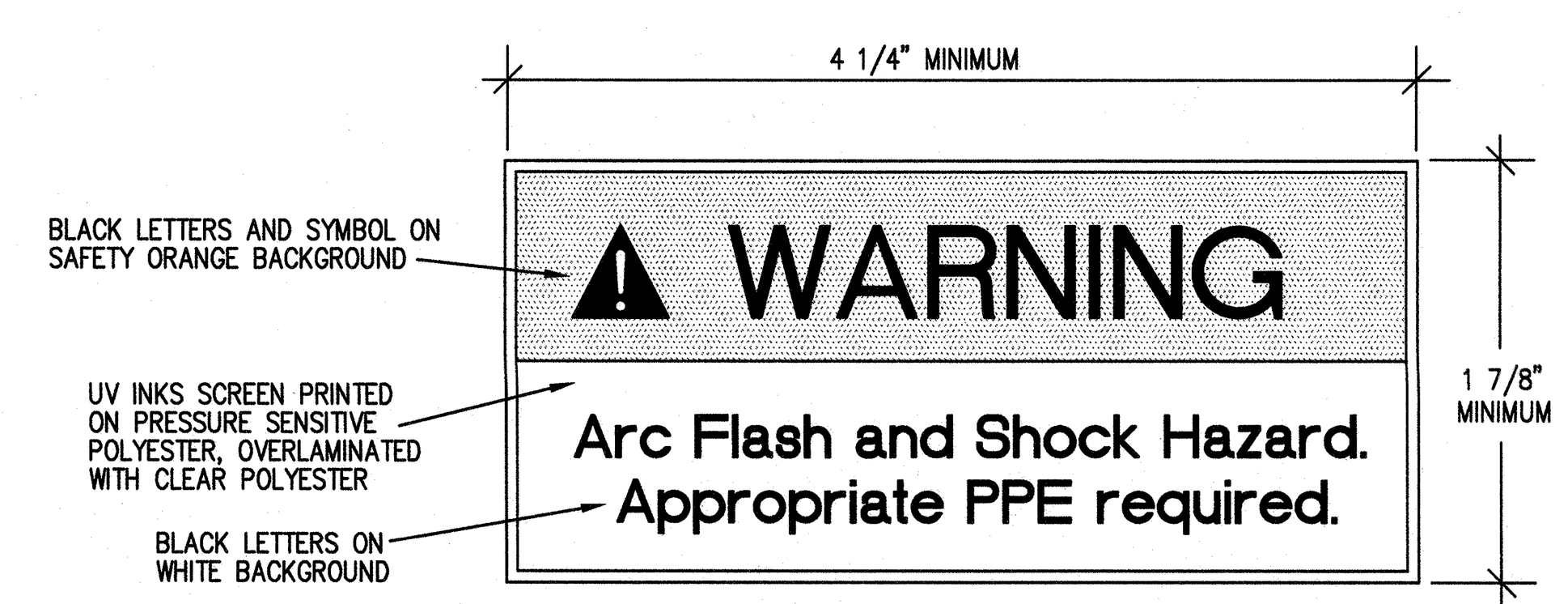

9 - Electrical Equipment Warning Label Detail
Not to Scale

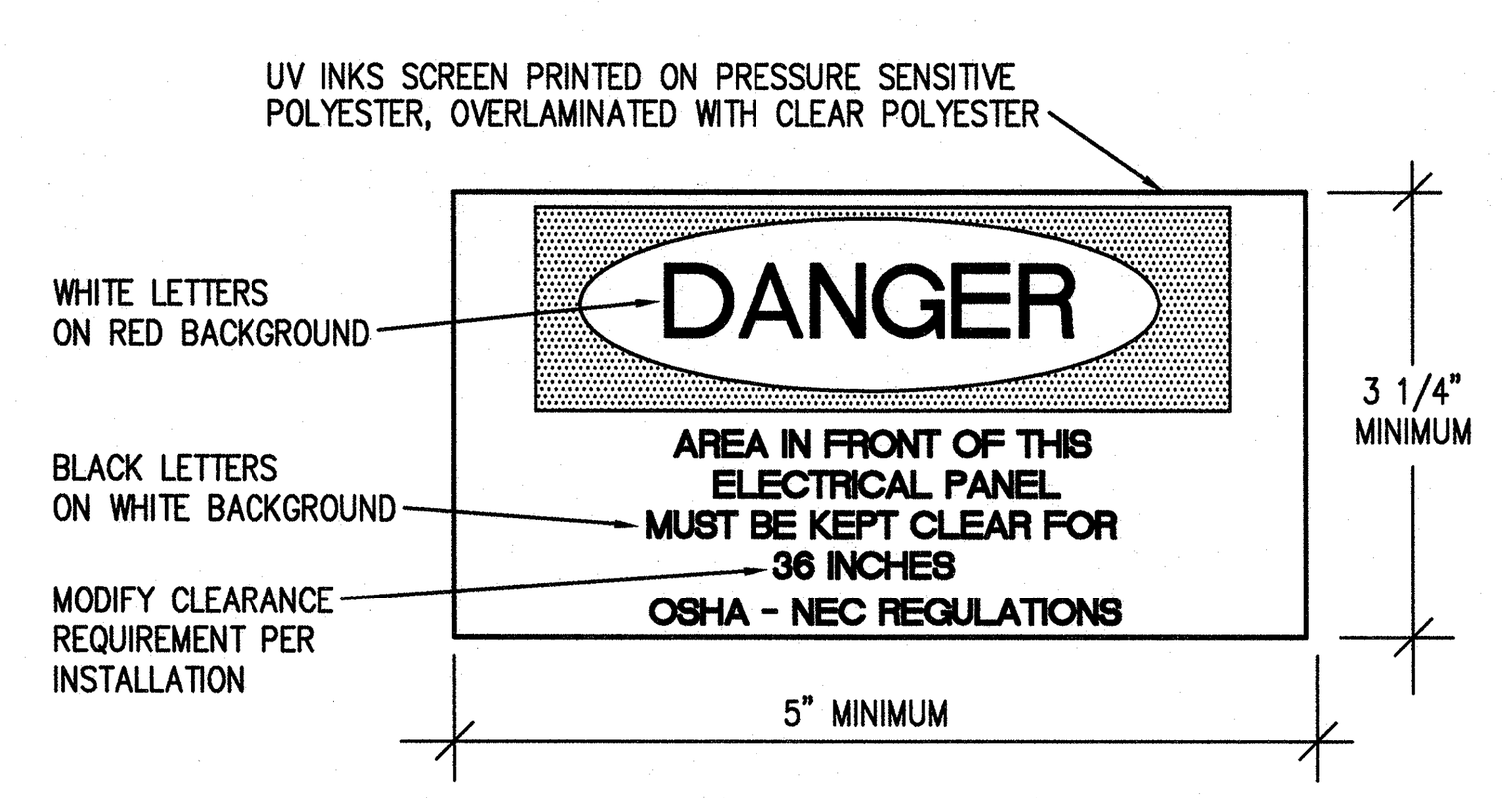

10 - NEC Working Space Label Detail
Not to Scale

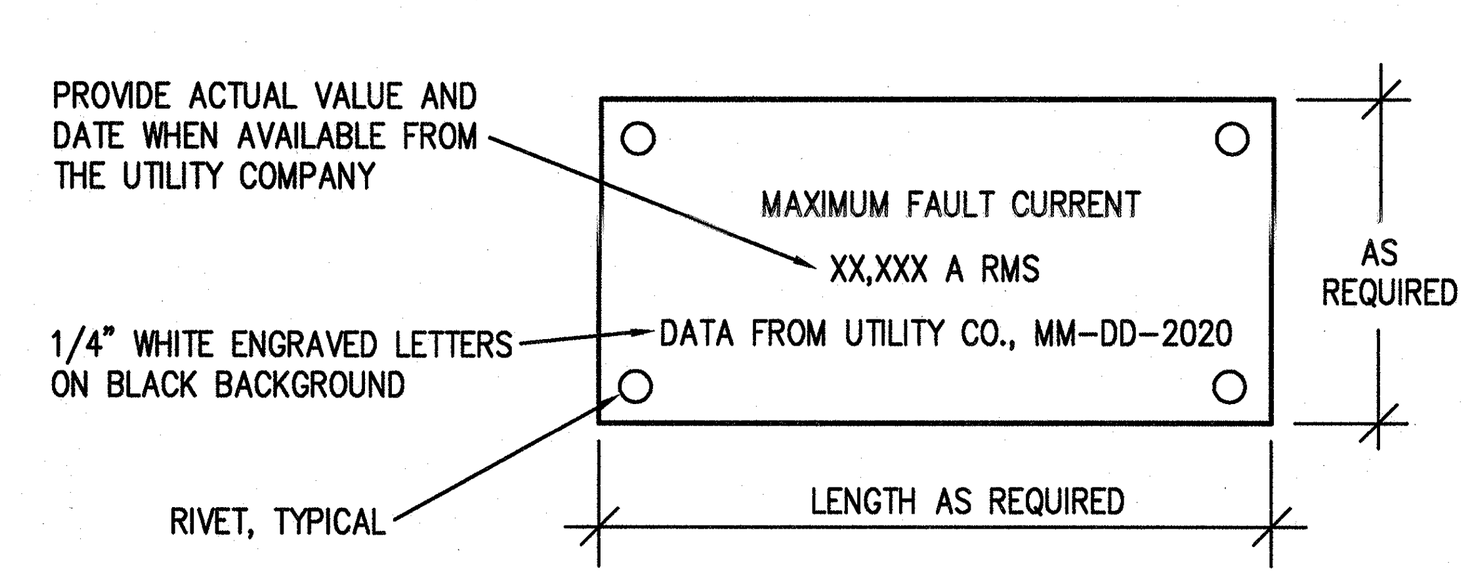

11 - Fault Current Nameplate Detail
Not to Scale

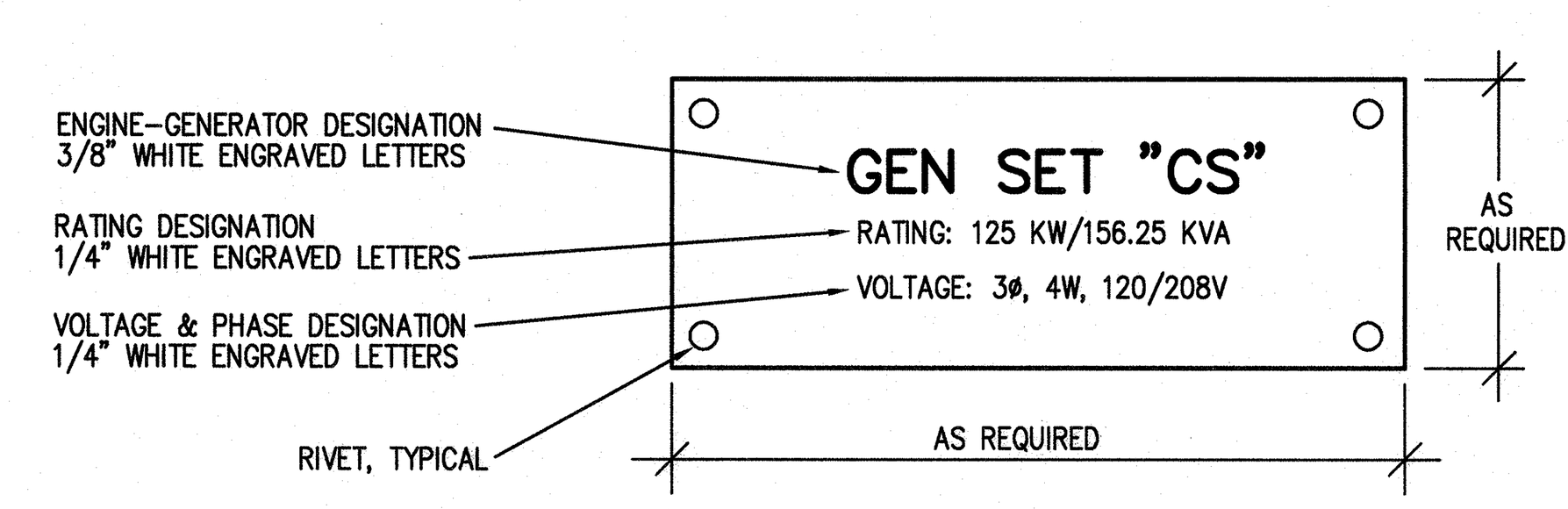

12 - E-G SET Nameplate Detail
Not to Scale

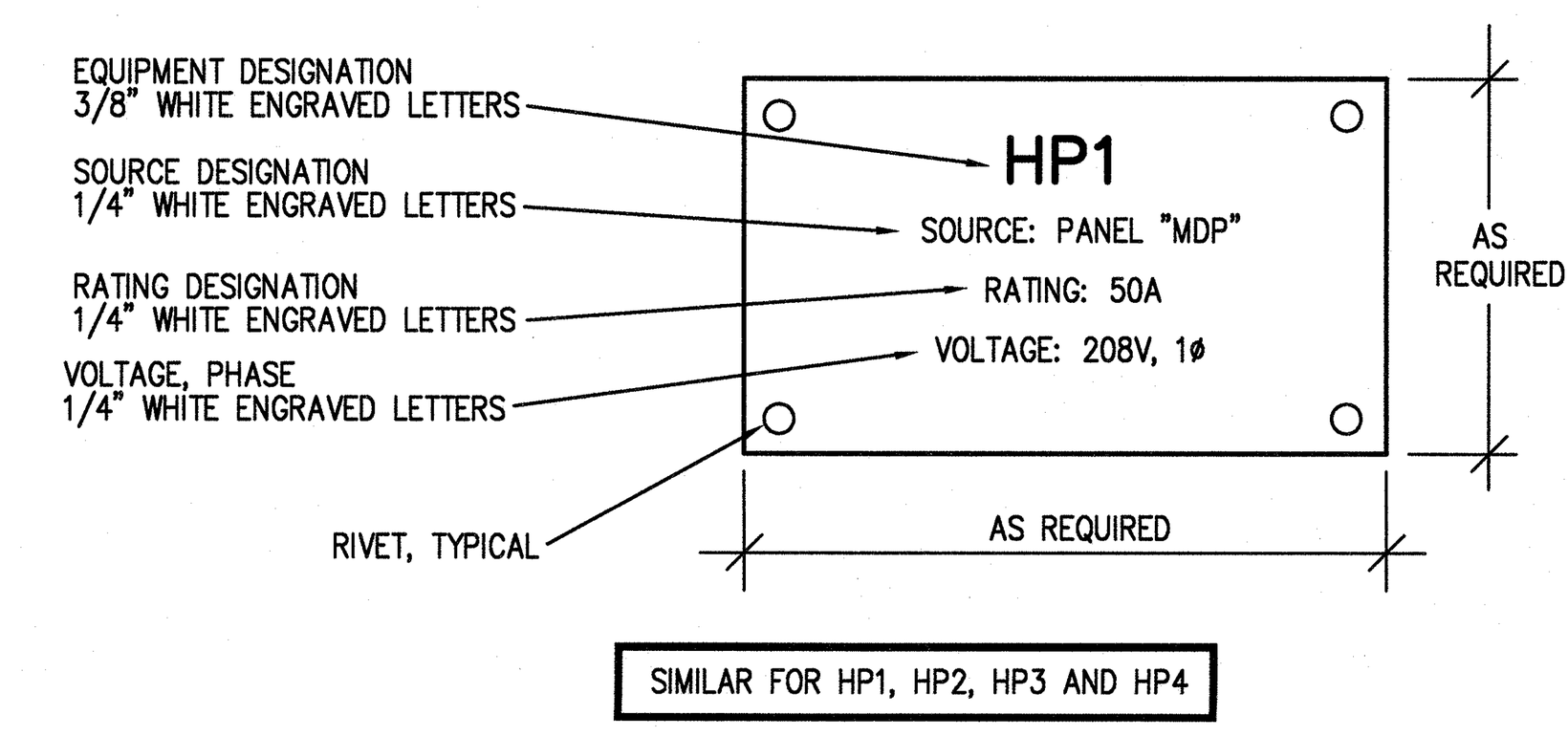

13 - Typical Equipment Nameplate Detail
Not to Scale

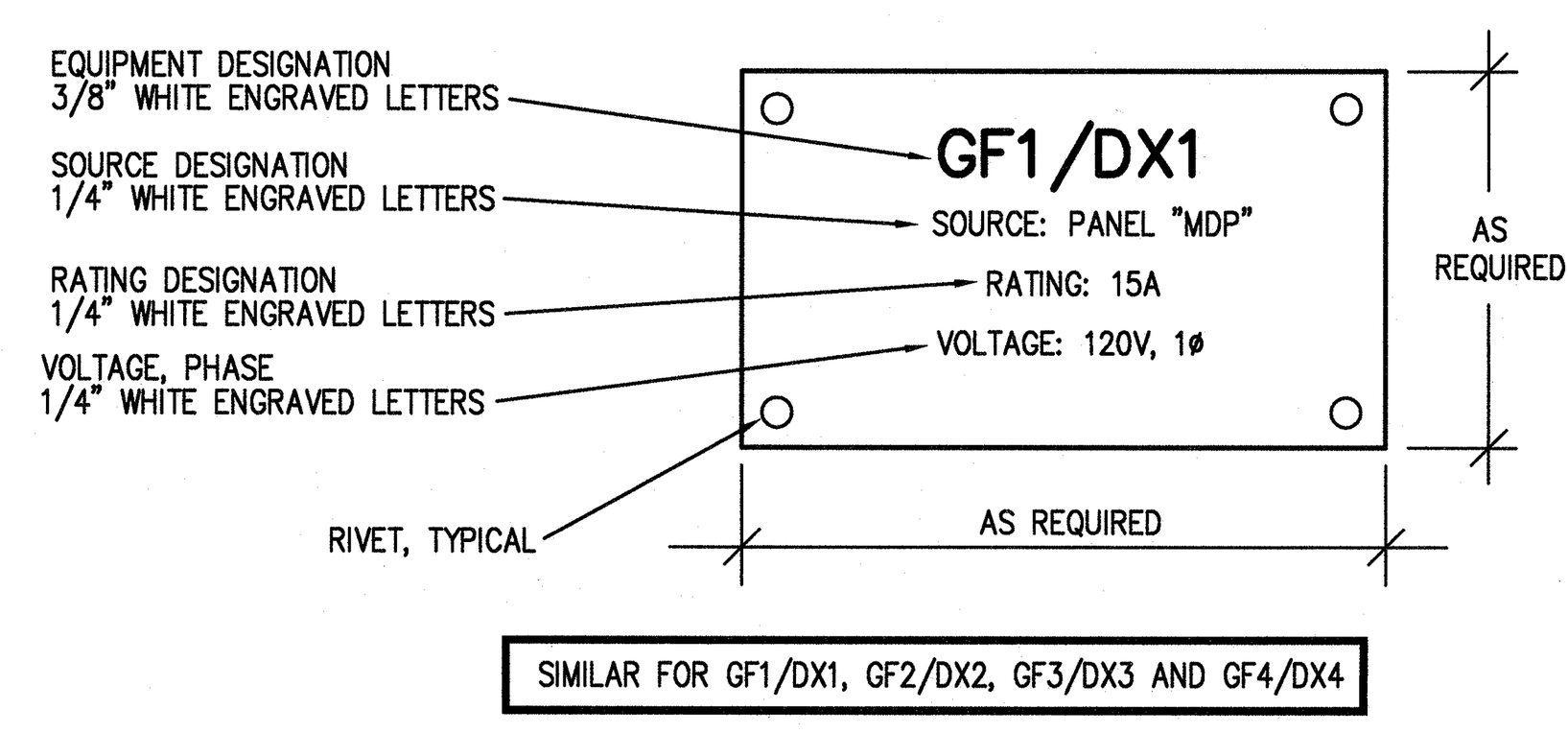

14 - Typical Equipment Nameplate Detail
Not to Scale

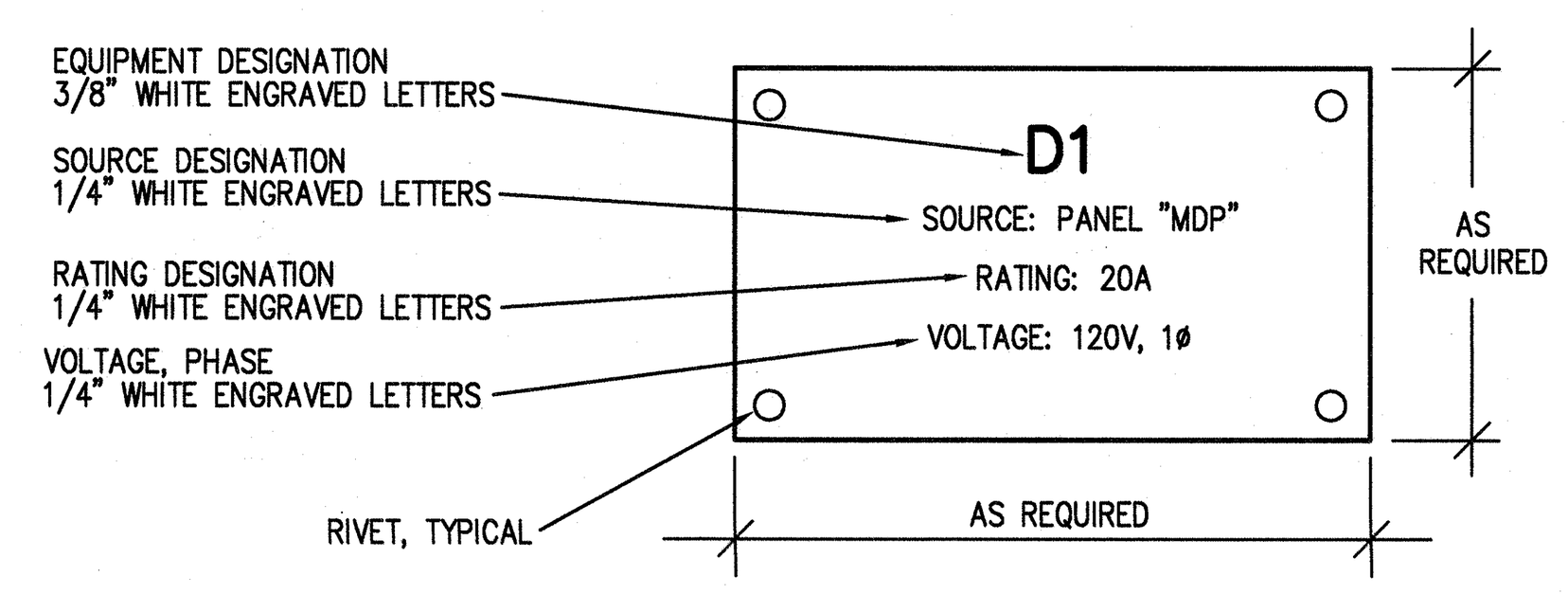

15 - Typical Equipment Nameplate Detail
Not to Scale

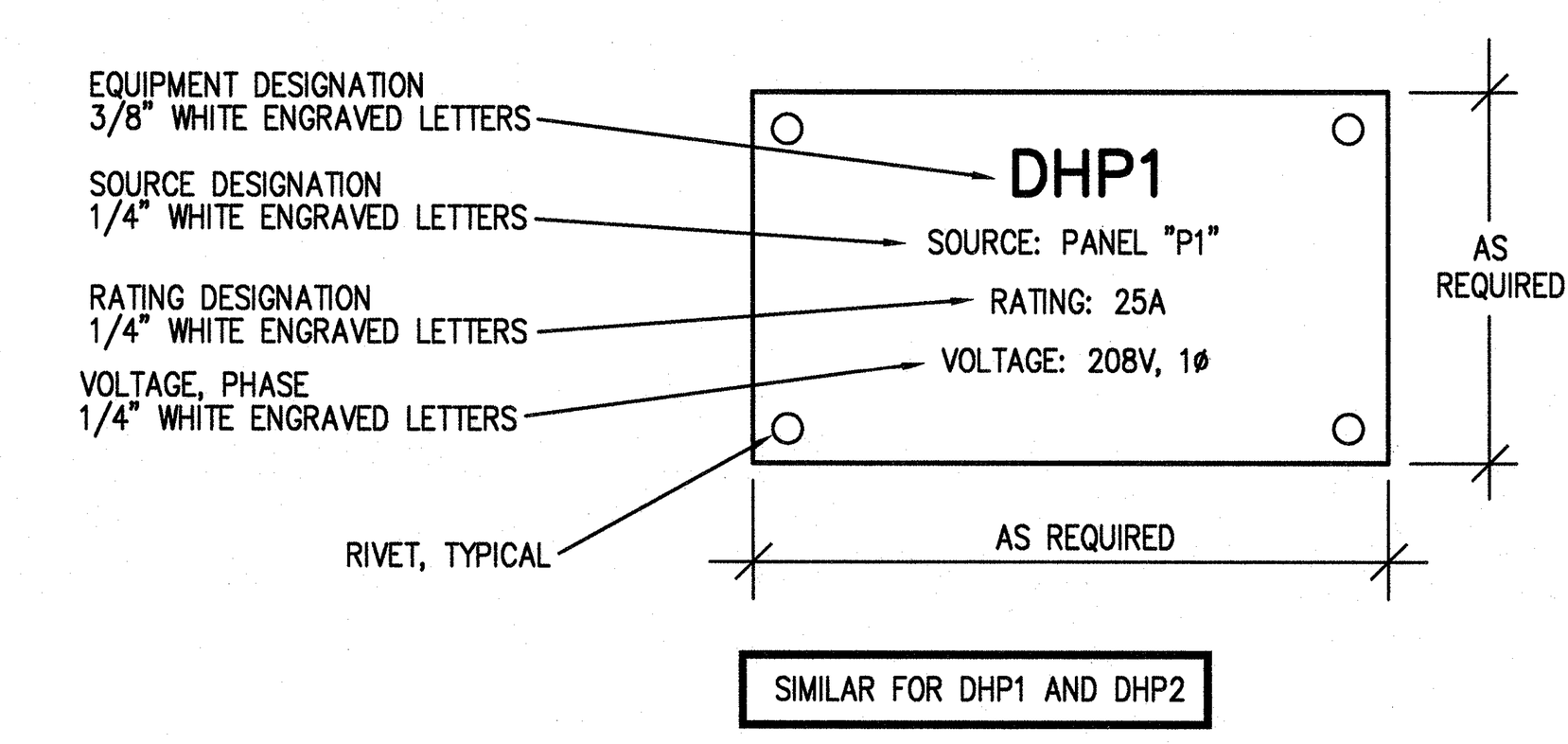

16 - Typical Equipment Nameplate Detail
Not to Scale

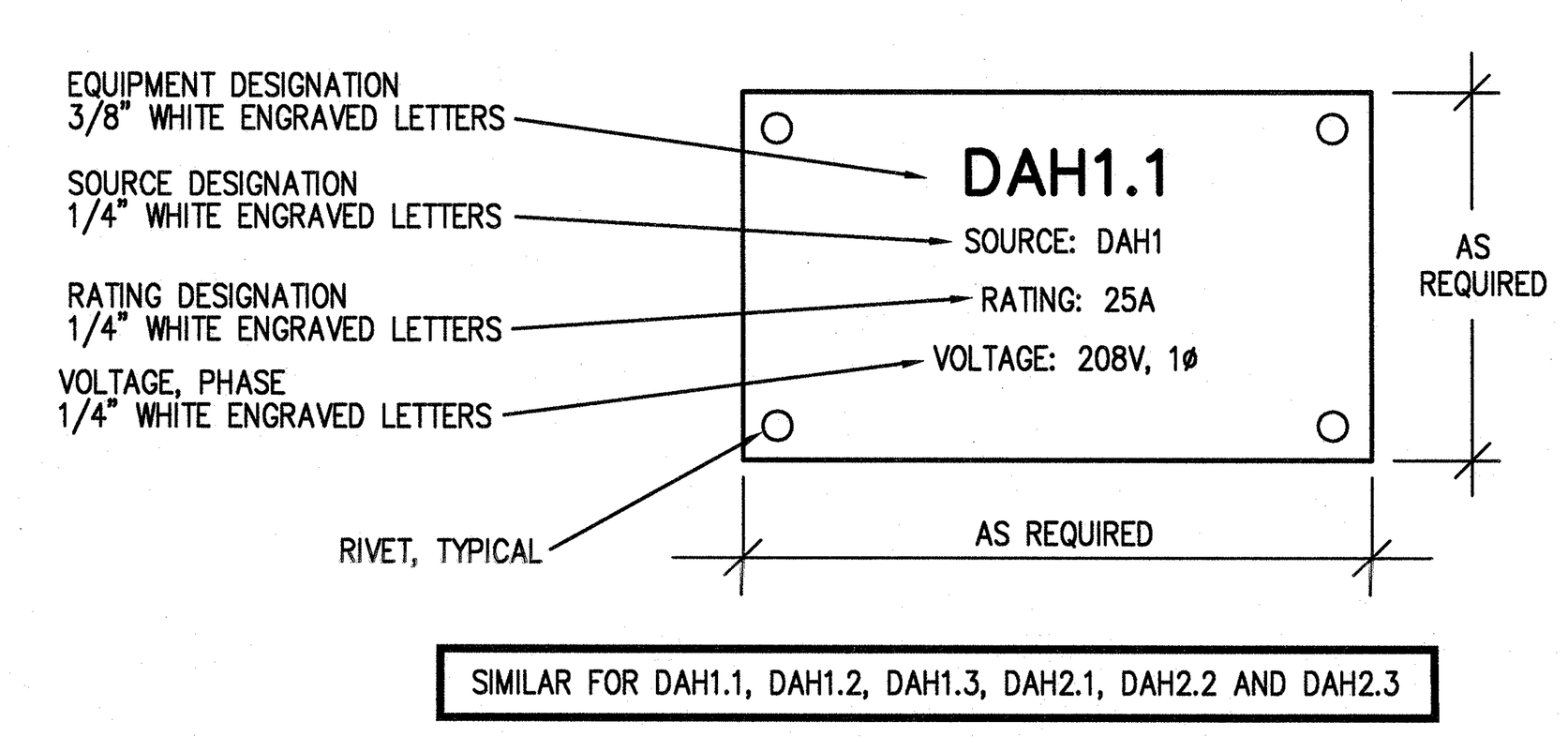

17 - Typical Equipment Nameplate Detail
Not to Scale

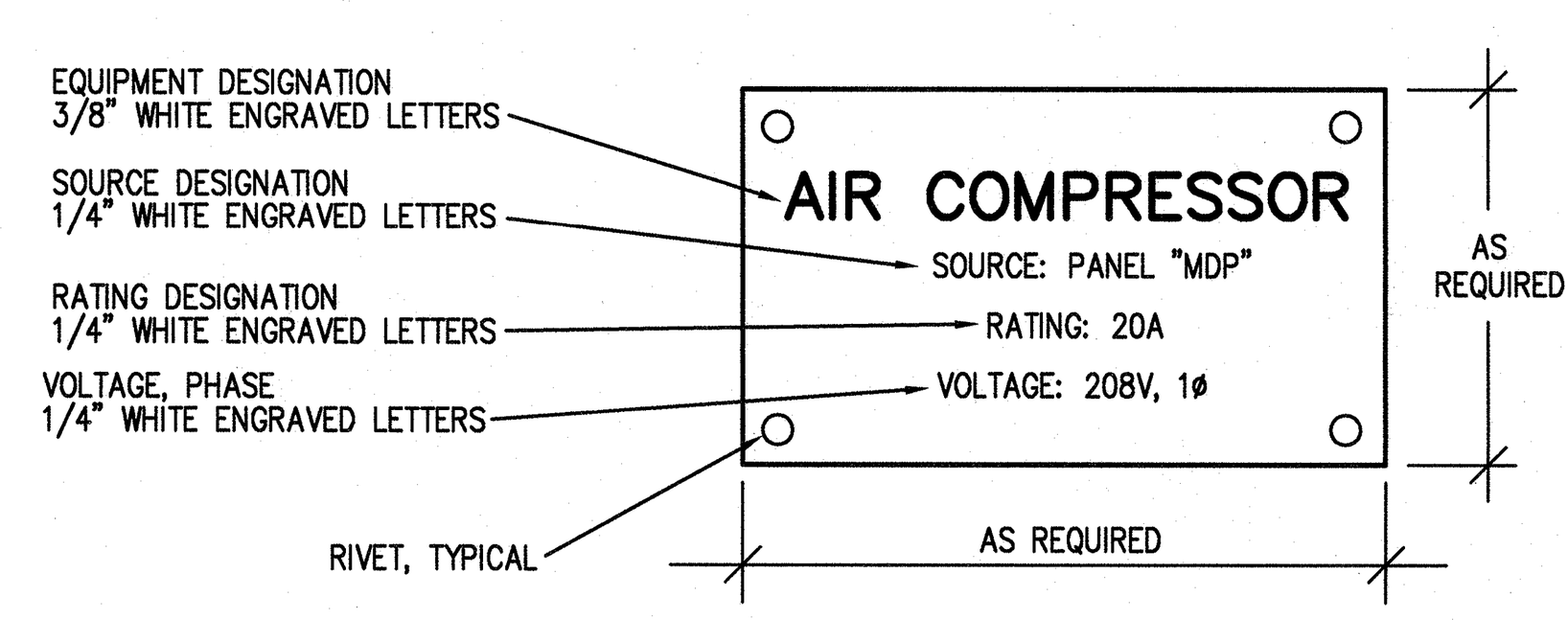

18 - Typical Equipment Nameplate Detail
Not to Scale

PANEL "MDP"

TYPE:	208	120 VOLTS,	3 PHASE,	4 WIRE	PROVIDE IF CHECKED: XX EQUIPMENT GROUND BUS
BOLT-ON	MOUNT:	SURFACE			XX 100 % NEUTRAL BUS
HINGED TRIM	FEED:	BOTTOM			ULSE LABEL
	NEMA –	1	ENCLOSURE		ISOLATED GROUND BAR

LOAD SERVED	LOAD VA	CKT BKR POLES/TRIP	CKT #	LOAD VA A	LOAD VA B	LOAD VA C	CKT #	CKT BKR POLES/TRIP	LOAD VA	LOAD SERVED
TRANSFORMER "T-277"	3,700	1/40	1	3,850			2	1/15	150	PV1
TRANSFORMER "T-240R"	6,000	2/60	3		6,069		4	1/15	69	PV2
	6,000		5			7,850	6	2/25	1,850	TRANSFORMER "T-240P"
AIR COMPRESSOR	900	2/20	7	2,750			8		1,850	
	900		9		900		10	1/20		SPARE
SPARE		1/20	11				12	1/20		SPARE
SPARE		1/20	13	1,267			14	1/20	1,267	D1 DEHUMIDIFIER
GF1/DX1/HP1 ODU	2,579	2/50	15		3,591		16	1/15	1,012	GF1/DX1/HP1 IDU
	2,579		17			3,258	18	1/15	679	GF2/DX2/HP2 IDU
GF2/DX2/HP2 ODU	1,248	2/25	19	2,260			20	1/15	1,012	GF3/DX3/HP3 IDU
	1,248		21		1,835		22	1/15	587	GF4/DX4/HP4 IDU
GF3/DX3/HP3 ODU	2,579	2/50	23			4,418	24	2/25	1,839	DHP1
	2,579		25	4,418			26		1,839	
GF4/DX4/HP4 ODU	2,080	2/40	27		3,919		28	2/25	1,839	DHP2
	2,080		29			3,919	30		1,839	
	1,920		31	2,760			32		840	
WASHER-EXTRACTOR #1	1,920	3/20	33		2,760		34	3/15	840	DRYER #1
	1,920		35			2,760	36		840	
	1,920		37	2,760			38		840	
WASHER-EXTRACTOR #2	1,920	3/20	39		2,760		40	3/15	840	DRYER #2
	1,920		41			2,760	42		840	
	1,920		43	2,760			44		840	
WASHER-EXTRACTOR #3	1,920	3/20	45		2,760		46	3/15	840	DRYER #3
	1,920		47			2,760	48		840	
	360		49	360			50			
WASHER-EXTRACTOR #4	360	3/15	51		360		52	3/30		SPARE
	360		53			360	54			
			55				56			
SPARE		3/70	57				58	3/60		SPD
			59				60			
			61	15,734			62		15,734	
SPARE		3/100	63		14,232		64	3/225	14,232	PANEL "P1"
			65			14,126	66		14,126	
NOTES: 1. COORDINATE CIRCUIT BREAKER TRIP WITH EQUIPMENT.				38,919	39,185	42,210	TOTAL VA		400 A.	BUS (COPPER, UNO)
				324	327	352	TOTAL AMPERES		400 A.	MAIN CIRCUIT BREAKER
				32%	33%	35%	PHASE BALANCE			

30 KAIC MINIMUM RATING

DEMAND SUMMARY:	CONN. (VA)	DEMAND FACTOR	DEMAND (VA)	NOTES
R: TOTAL RECEPTACLES (VA) = 23,582				
RECEPTACLES FIRST 10 KVA	10,000	1.00	10,000	
RECEPTACLES > 10 KVA	13,582	0.50	6,791	
L: LIGHTING	4,858	1.25	6,073	
M: MISCELLANEOUS EQUIPMENT	36,912	1.00	36,912	
O: OTHER EQUIPMENT (CONTINUOUS)	16,560	1.25	20,700	
B: LARGEST MOTOR	5,158	1.25	6,448	
H: HVAC EQUIPMENT (FLA = MCA X 0.8)	23,944	1.00	23,944	
K: KITCHEN EQUIPMENT		1.00		DEMAND FACTOR PER NEC TABLE 220.56
TOTAL CONNECTED (VA)	111,015			
TOTAL DEMAND (VA)			110,868	
TOTAL DEMAND (AMPERES)			307.7	
PANEL DEMAND LOADING VS RATING		76.9%		

PANEL "P1"

TYPE:	208	120 VOLTS,	3 PHASE,	4 WIRE	PROVIDE IF CHECKED: XX EQUIPMENT GROUND BUS
BOLT-ON	MOUNT:	SURFACE			XX 100 % NEUTRAL BUS
HINGED TRIM	FEED:	TOP			ULSE LABEL
	NEMA –	1	ENCLOSURE		ISOLATED GROUND BAR

LOAD SERVED	LOAD VA	CKT BKR POLES/TRIP	CKT #	LOAD VA A	LOAD VA B	LOAD VA C	CKT #	CKT BKR POLES/TRIP	LOAD VA	LOAD SERVED
RECEPTACLE 105	180	1/20	1	1,980			2	1/20	1,800	RECEPTACLE 126
RECEPTACLE 105	180	1/20	3		1,980		4	1/20	1,800	RECEPTACLE 126
RECEPTACLE 105	180	1/20	5			1,980	6	1/20	1,800	RECEPTACLE 126
RECEPTACLE 105	181	1/20	7	1,981			8	1/20	1,800	RECEPTACLE 126
RECEPTACLES 105	181	1/20	9		1,981		10	1/20	1,800	RECEPTACLE 126
RECEPTACLES 102,104	180	1/20	11			900	12	1/20	720	RECEPTACLES 125
RECEPTACLE 103	360	1/20	13	720			14	1/20	360	RECEPTACLES 124
RECEPTACLE 103	360	1/20	15		1,260		16	1/20	900	RECEPTACLES 124
RECEPTACLE 103	360	1/20	17			720	18	1/20	360	EXTERIOR RECEPTACLES
RECEPTACLE 103	360	1/20	19	1,800			20	1/20	1,440	RECEPTACLES 114,116,117,118,121,PV4,PV5
RECEPTACLE 103	360	1/20	21		1,620		22	1/20	1,260	RECEPTACLES 110,119
RECEPTACLE 103	540	1/20	23			1,040	24	1/20	500	EWC (NOTE 1)
LIGHTS 124,125,126	1,141	1/20	25	2,401			26	1/20	1,260	RECEPTACLES 101,108,109,110,111
LIGHTS 114,116,117,118,119,120,121,122,123	1,144	1/20	27		2,404		28	1/20	1,260	RECEPTACLES 106,107,PV1,PV2
LIGHTS 101,102,103,104,105,108,109,110,111	1,760	1/20	29			2,960	30	1/20	1,200	VENDING MACHINE 111
LIGHTS 106,107,112,113,115	676	1/20	31	1,876			32	1/20	1,200	REFRIGERATOR 111
EXTERIOR LIGHTS THRU PHOTOCELL	137	1/20	33		1,137		34	1/20	1,000	DISHWASHER 111
SPARE		1/20	35			1,800	36	1/20	1,800	RECEPTACLE 111
SPARE		1/20	37	1,800			38	1/20	1,800	RECEPTACLE 111
SPARE		1/20	39		200		40	1/20	200	EG SET BATTERY CHARGER (NOTE 2)
SPARE		1/20	41			500	42	1/20	500	EG SET ANTI-CONDENSATION HEATER (NOTE 2)
SPARE		1/20	43	1,800			44	1/20	1,800	GOLF CART CHARGER
SPARE		1/20	45		1,800		46	1/20	1,800	GOLF CART CHARGER
SPARE		1/20	47			1,800	48	1/20	1,800	GOLF CART CHARGER
SPARE		1/20	49	200			50	1/20	200	FIRE ALARM CONTROL UNIT (FACU) (NOTE 2)
SPARE		1/20	51		400		52	1/20	400	WH1,WH2
SPARE		1/20	53			1,176	54	1/20	1,176	OVERHEAD DOOR
SPARE		1/20	55	1,176			56	1/20	1,176	OVERHEAD DOOR
SPARE		1/20	57		200		58	1/20	200	HW CIRC. PUMP
SPARE		1/20	59				60	1/20		SPARE
SPARE		1/20	61				62	1/20		SPARE
SPARE		1/20	63				64	1/20		SPARE
SPARE		1/20	65				66	1/20		SPARE
SPARE		1/20	67				68	1/20		SPARE
SPARE		1/20	69				70	1/20		SPARE
SPARE		1/20	71				72	1/20		SPARE
SPARE		1/20	73				74	1/20		SPARE
SPARE		1/20	75				76	1/20		SPARE
SPARE		1/20	77				78	1/20		SPARE
SPARE		1/20	79				80	1/20		SPARE
SPARE		1/20	81		1,250		82	2/20	1,250	EG SET BLOCK HEATER (NOTE 2)
SPARE		1/20	83			1,250	84		1,250	
SPARE				15,734	14,232	14,126	TOTAL VA		225 A.	BUS (COPPER, UNO)
1. PROVIDE GFCI CIRCUIT BREAKER				131	119	118	TOTAL AMPERES		225 A.	MAIN LUGS
2. PROVIDE CIRCUIT BREAKER LOCKING DEVICE				36%	32%	32%	PHASE BALANCE			

30 KAIC MINIMUM RATING

DEMAND SUMMARY:	CONN. (VA)	DEMAND FACTOR	DEMAND (VA)	NOTES
R: TOTAL RECEPTACLES (VA) = 23,582				
RECEPTACLES FIRST 10 KVA	10,000	1.00	10,000	
RECEPTACLES > 10 KVA	13,582	0.50	6,791	
L: LIGHTING	4,858	1.25	6,073	
M: MISCELLANEOUS EQUIPMENT	10,052	1.00	10,052	
O: OTHER EQUIPMENT (CONTINUOUS)	5,600	1.25	7,000	
B: LARGEST MOTOR		1.25		
H: HVAC EQUIPMENT (FLA = MCA X 0.8)		1.00		
K: KITCHEN EQUIPMENT		1.00		DEMAND FACTOR PER NEC TABLE 220.56
TOTAL CONNECTED (VA)	44,092			
TOTAL DEMAND (VA)			39,916	
TOTAL DEMAND (AMPERES)			110.8	
PANEL DEMAND LOADING VS RATING		49.2%		

McFadyen Engineers, PLLC
4411 Peachtree Avenue Wilmington, NC 28403 Phone: 910.399.1125
NC# P-1010
© Copyright 2020 McFadyen Engineers, PLLC

BOWMAN MURRAY HEMINGWAY ARCHITECTS
514 Market Street
Wilmington, NC 28406
Tel - (910) 762-2621
Fax - (910) 762-8506

NORTH CAROLINA PROFESSIONAL SEAL 8433 ENGINEER R. DUNCAN McFADYEN
7-20-20

THE DAVIS COMMUNITY Central Services Center

1011 Porter's Neck Road
Wilmington, North Carolina 28411

REV.	DATE	DESCRIPTION

NO.	DATE	ISSUE NOTE
1	7-20-2020	PERMIT SET

Project Manager: WPJ	Drawn By: WPJ
Date: July 20, 2020	Reviewed By: RDM
Project ID	

Sheet Title
Panel Schedules and Details

Sheet No.
E004

System No. W-L-1054
December 04, 2002
F Ratings – 1 and 2 Hr (See Items 1 and 3)
T Rating – 0 Hr
L Rating At Ambient – Less Than 1 CFM/Sq Ft
L Rating At 400 F – 4 CFM/Sq Ft

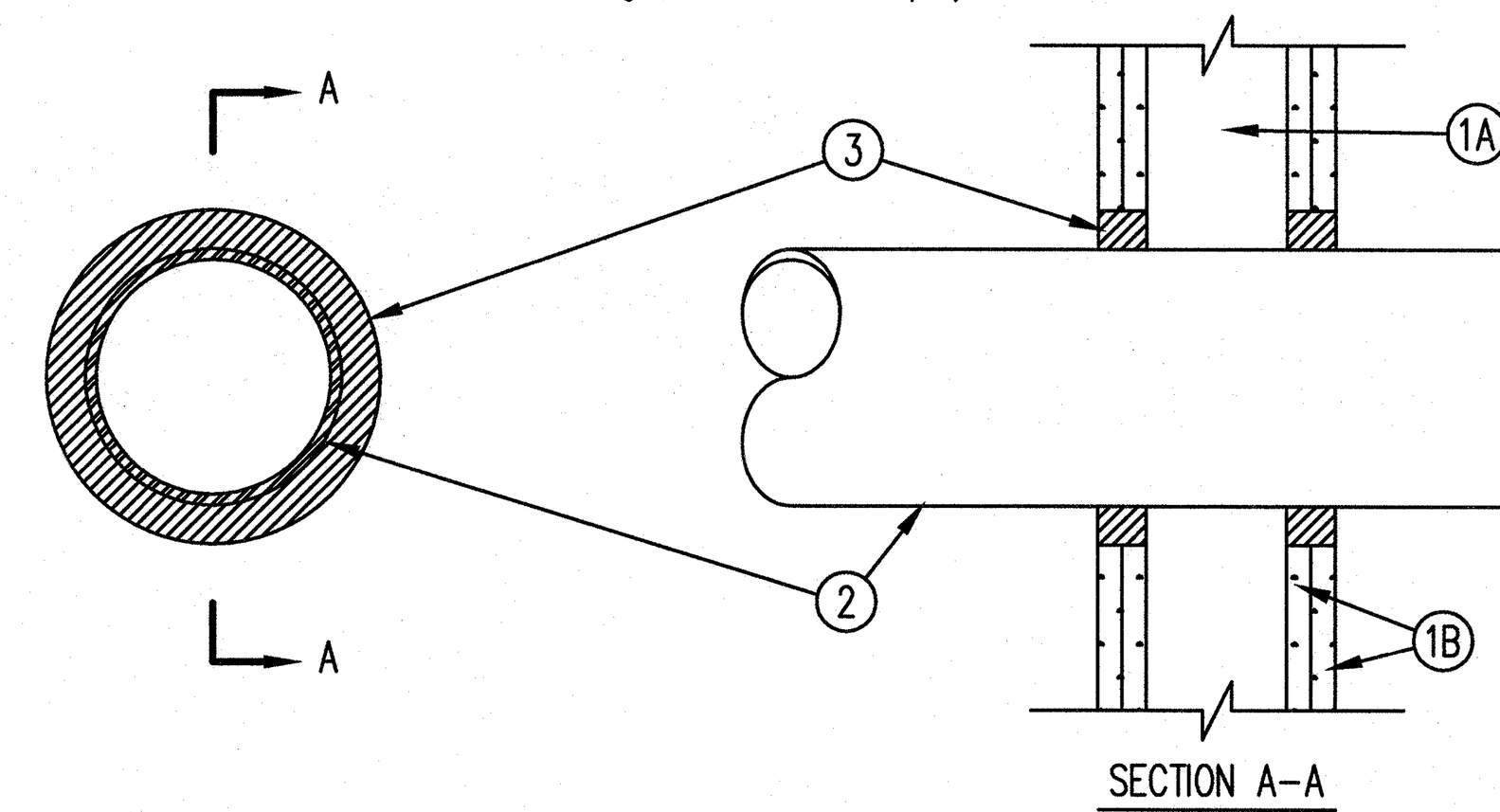

1. Wall Assembly – The 1 or 2 hr fire-rated gypsum wallboard/stud wall assembly shall be constructed of the materials and in the manner specified in the individual U300 or U400 Series Wall and Partition Designs in the UL Fire Resistance Directory and shall include the following construction features:
   A. Studs – Wall framing may consist of either wood studs or steel channel studs. Wood studs to consist of nom 2 by 4 in. lumber spaced 16 in. OC. Steel studs to be min 2-1/4 in. wide and spaced max 24 in. OC. When steel studs are used and the diam of opening exceeds the width of stud cavity, the opening shall be framed on all sides using lengths of steel stud installed between the vertical studs and screw-attached to the steel studs at each end. The framed opening in the wall shall be 4 to 6 in. wider and 4 to 6 in. higher than the diam of the penetrating item such that, when the penetrating item is installed in the opening, a 2 to 3 in. clearance is present between the penetrating item and the framing on all four sides.
   B. Gypsum Board* – 3/8 in. thick, 4 ft wide with square or tapered edges. The gypsum board type, thickness, number of layers, fastener type and sheet orientation shall be as specified in the individual U300 or U400 Series Design in the UL Fire Resistance Directory. Max diam of opening is 32-1/4 in. for steel stud walls. Max diam of opening is 14-1/4 in. for wood stud walls.
   The F Rating of the firestop system is equal to the fire rating of the wall assembly.
2. Through-Penetrants – One metallic pipe, conduit or tubing to be installed either concentrically or eccentrically within the firestop system. The annular space shall be min 0 in. to max 2-1/4 in. Pipe may be installed with continuous point contact. Pipe, conduit or tubing may be installed at an angle not greater than 45 degrees from perpendicular. Pipe, conduit or tubing to be rigidly supported on both sides of wall assembly. The following types and sizes of metallic pipes, conduits or tubing may be used:
   A. Steel Pipe – Nom 30 in diam (or smaller) Schedule 10 (or heavier) steel pipe.
   B. Iron Pipe – Nom 30 in. diam (or smaller) cast or ductile iron pipe.
   C. Conduit – Nom 4 in diam (or smaller) steel electrical metallic tubing or 6 in. diam steel conduit.
   D. Copper Tubing – Nom 6 in. diam (or smaller) Type L (or heavier) copper tubing.
   E. Copper Pipe – Nom 6 in. diam (or smaller) regular (or heavier) copper pipe.
3. Fill, Void or Cavity Material* – Sealant – Min 3/8 in. thickness of fill material applied within the annulus, flush with both surfaces of wall. At the point or continuous contact locations between pipe and wall, a min 1/4 in. diam bead of fill material shall be applied at the pipe wall interface on both surfaces of wall .
HILTI CONSTRUCTION CHEMICALS, DIV OF
HILTI INC – FS-One Sealant

Filename = XHEZ.W-L-1054
Copyright December 04, 2002 Underwriters Laboratories, INC.
Reprinted from the UL Online Directory with permission from Underwriters Laboratories INC.

2 - 1 and 2 Hour Firewall Penetration Detail
NOT TO SCALE

System No. C-AJ-1226
October 30, 2003
F Rating – 3 Hr
T Rating – 0 Hr
L Rating At Ambient – Less Than 1 CFM/Sq Ft
L Rating At 400 F – 4 CFM/Sq Ft

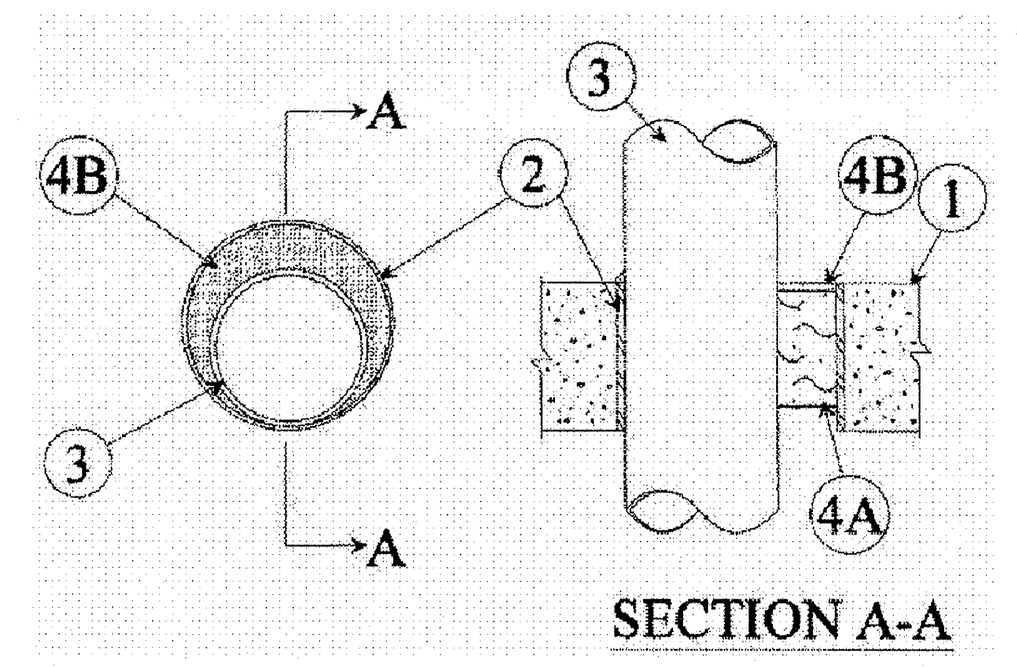

1. Floor or Wall Assembly – Min 4-1/4 in. thick reinforced lightweight or normal weight (100-150 pcf) concrete. Wall may also be constructed of any UL Classified Concrete Blocks*. Max diam of opening is 32 in.
2. Metallic Sleeve – (Optional) Nom 32 in. diam (or smaller) Schedule 40 (or heavier) steel sleeve cast or grouted into floor or wall assembly, flush with floor or wall surfaces or extending a max of 3 in. above floor or beyond both surfaces of wall.
3. Through-Penetrant – One metallic pipe, tube or conduit to be installed either concentrically or eccentrically within the firestop system. The annular space between penetrant and periphery of opening shall be min 0 in. (point contact) to max 1-7/8 in. Penetrant may be installed with continuous point contact. Penetrant to be rigidly supported on both sides of floor or wall assembly. The following types and sizes of metallic penetrants may be used:
   A. Steel Pipe – Nom 30 in. diam (or smaller) Schedule 10 (or heavier) steel pipe.
   B. Iron Pipe – Nom 30 in. diam (or smaller) cast or ductile iron pipe.
   C. Copper Pipe – Nom 6 in. diam (or smaller) Regular (or heavier) copper pipe.
   D. Copper Tubing – Nom 6 in. diam (or smaller) Type L (or heavier) copper tubing.
   E. Conduit – Nom 6 in. diam (or smaller) steel conduit.
   F. Conduit – Nom 4 in. diam (or smaller) steel electrical metallic tubing (EMT).
4. Firestop System – The firestop system shall consist of the following:
   A. Packing Material – Min 4 in. thickness of min 4 pcf mineral wool batt insulation firmly packed into opening as a permanent form. Packing material to be recessed from top surface of floor or sleeve or from both surfaces of wall or sleeve as required to accommodate the required thickness of fill material.
   B. Fill, Void or Cavity Material* – Sealant – Min 1/4 in. thickness of fill material applied within the annulus, flush with top surface of floor or sleeve or with both surfaces of wall or sleeve. At the point or continuous contact locations between penetrant and concrete or sleeve, a min 1/4 in. diam bead of fill material shall be applied at the concrete or sleeve/ pipe penetrant interface on the top surface of floor and on both surfaces of wall.
   HILTI CONSTRUCTION CHEMICALS, DIV OF
   HILTI INC – FS-One Sealant
*Bearing the UL Classification Mark

Filename = XHEZ.C-AJ-1226
Copyright 2005 Underwriters Laboratories, INC.
Reprinted from the UL Online Directory with permission
from Underwriters Laboratories INC.

3 - 3 Hour Firewall Penetration Detail
NOT TO SCALE

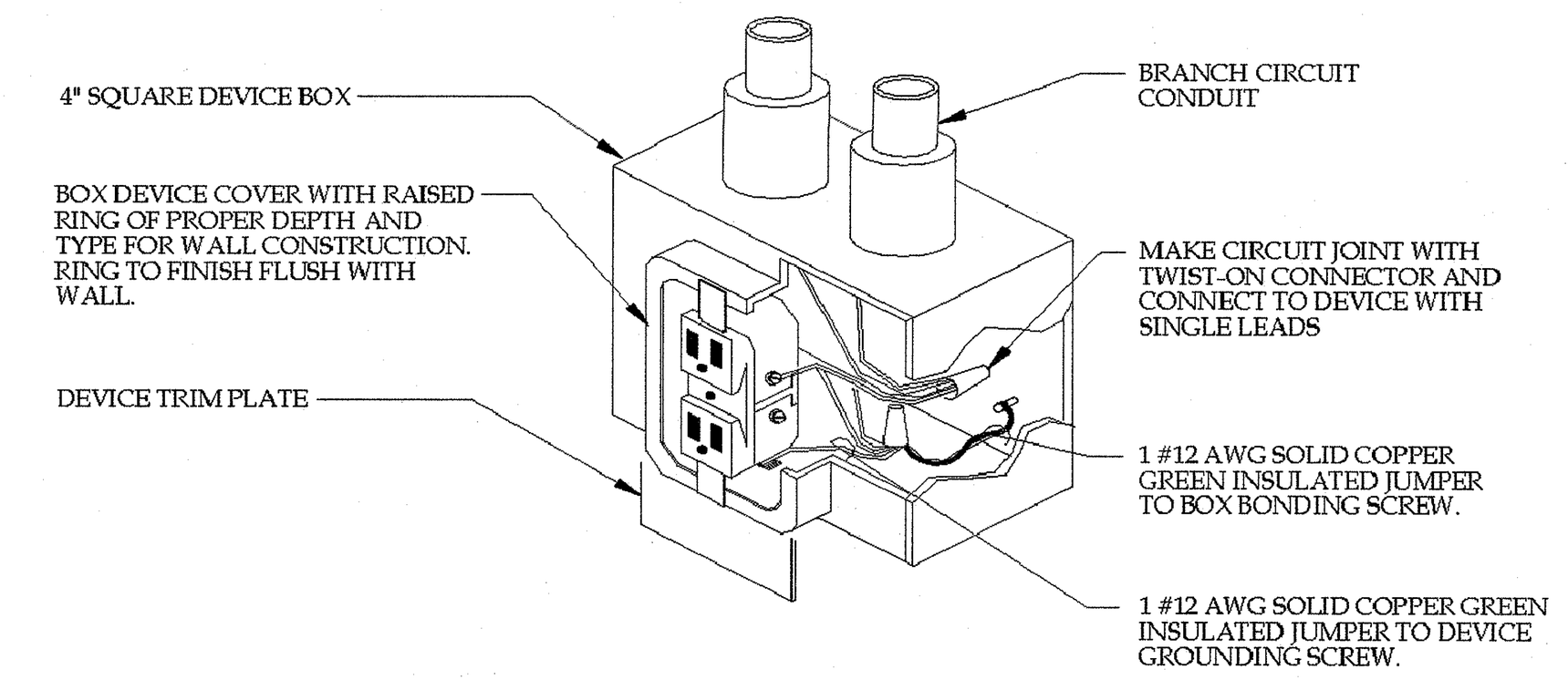

4 - Receptacle Grounding Detail
NOT TO SCALE

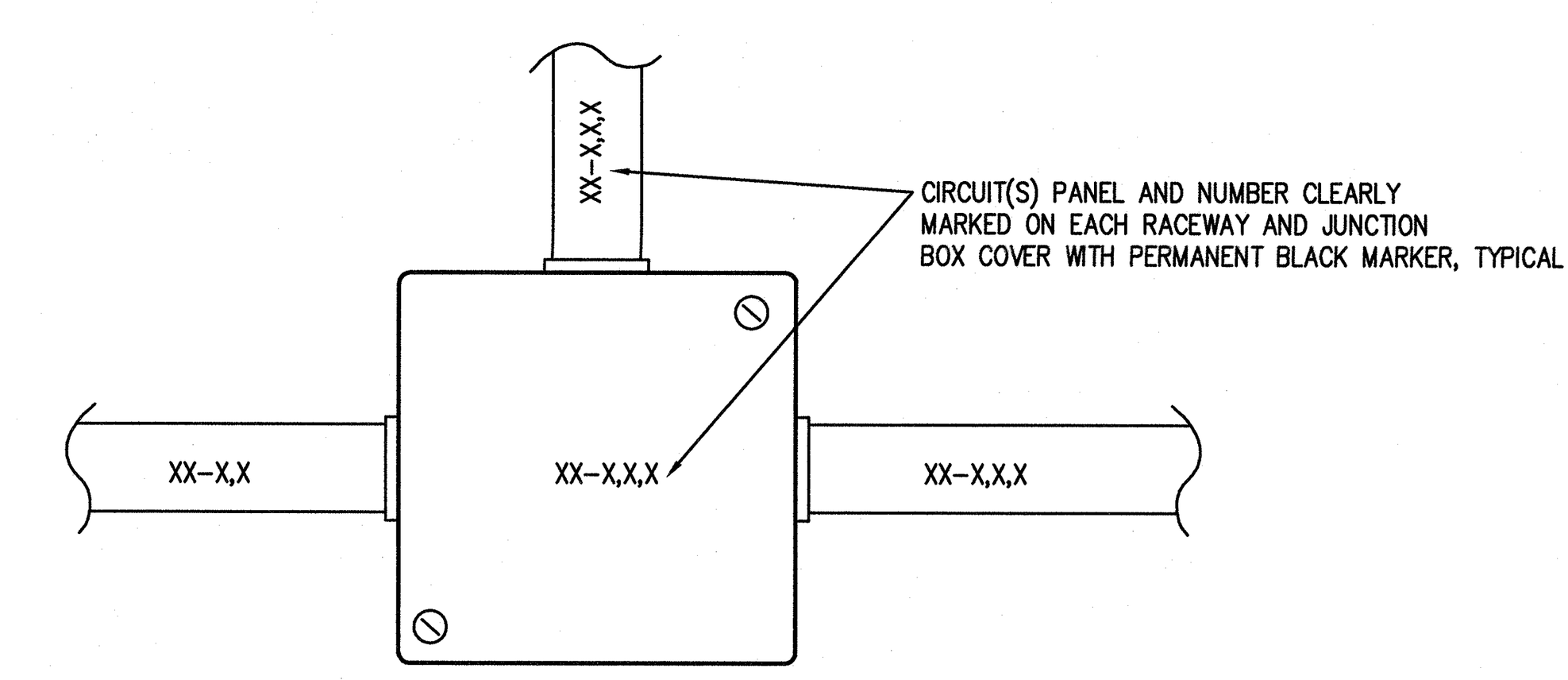

6 - Circuit Identification Detail
NOT TO SCALE

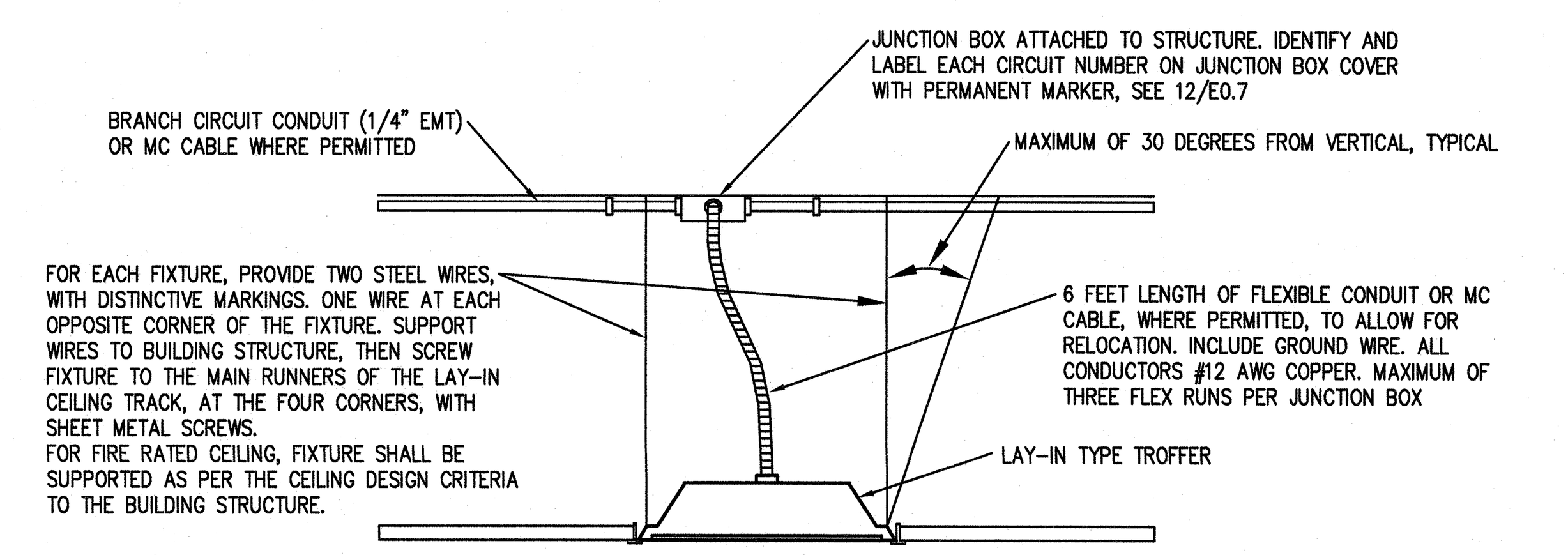

5 - Lighting Fixture Mounting and Installation Detail
Not to Scale

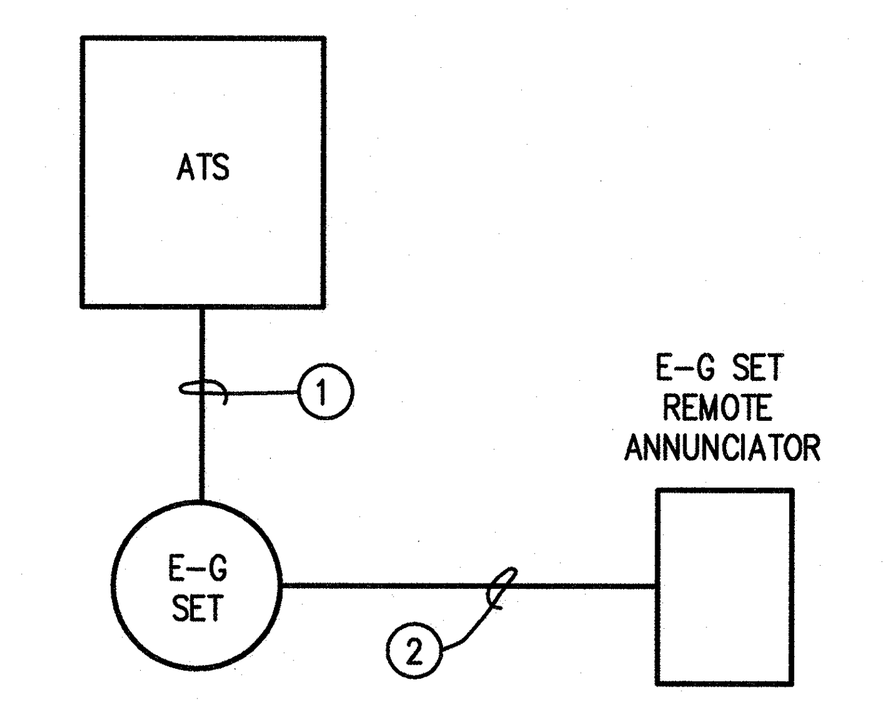

1. E-G SET START-STOP, COMMUNICATIONS/CONTROL CABLES AND CONDUCTORS, AND ADDITIONAL CONDUCTORS AS REQUIRED BY GEN SET AND ATS MANUFACTURERS RECOMMENDATIONS. SIZES AND QUANTITIES AS REQUIRED IN 1 1/4" MINIMUM C.
2. E-G SET REMOTE ANNUNCIATOR CABLE AND CONDUCTORS, SIZE AND QUANTITY AS REQUIRED IN 1" MINIMUM C.

7 - Generator Control Block Diagram
NOT TO SCALE

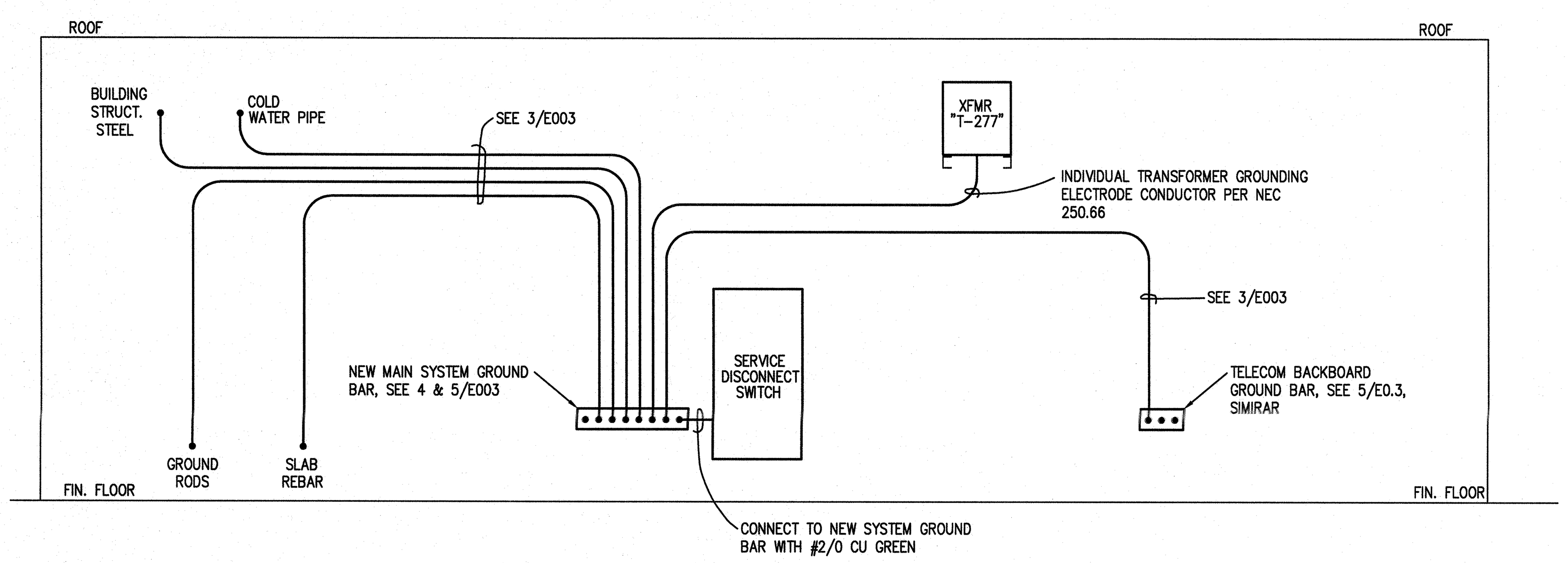

10 - System Grounding Detail
NOT TO SCALE

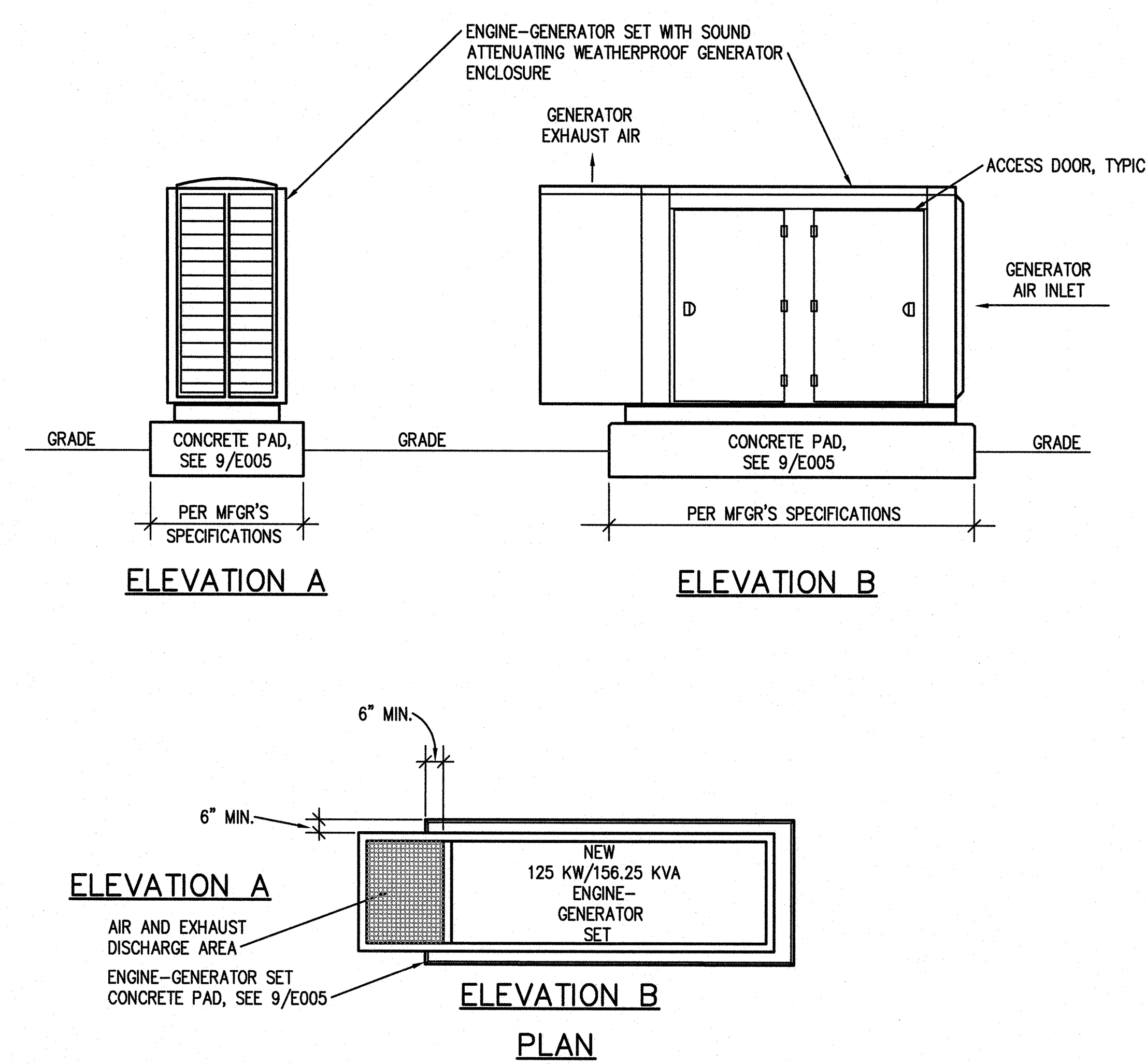

8 - Engine Generator Details
Not to Scale

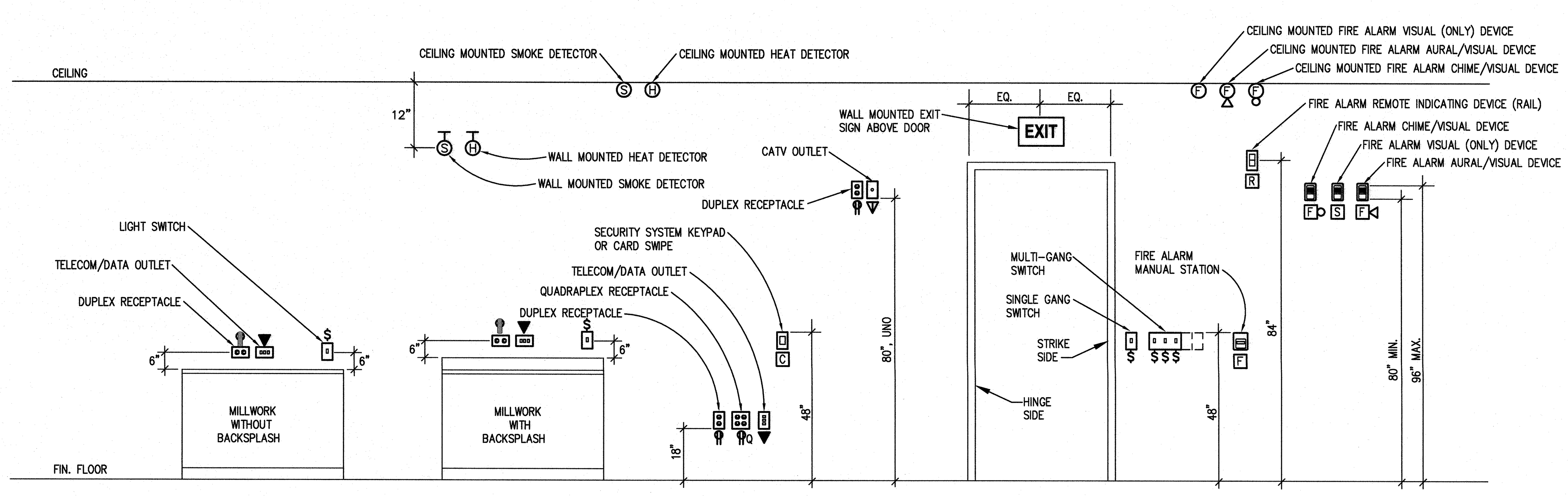

NOTE: TELECOM/DATA OUTLETS ARE TO BE INSTALLED AT THE SAME HEIGHT AS ADJACENT RECEPTACLE, UNO

1 - Standard Device Mounting Height Detail
Not to Scale

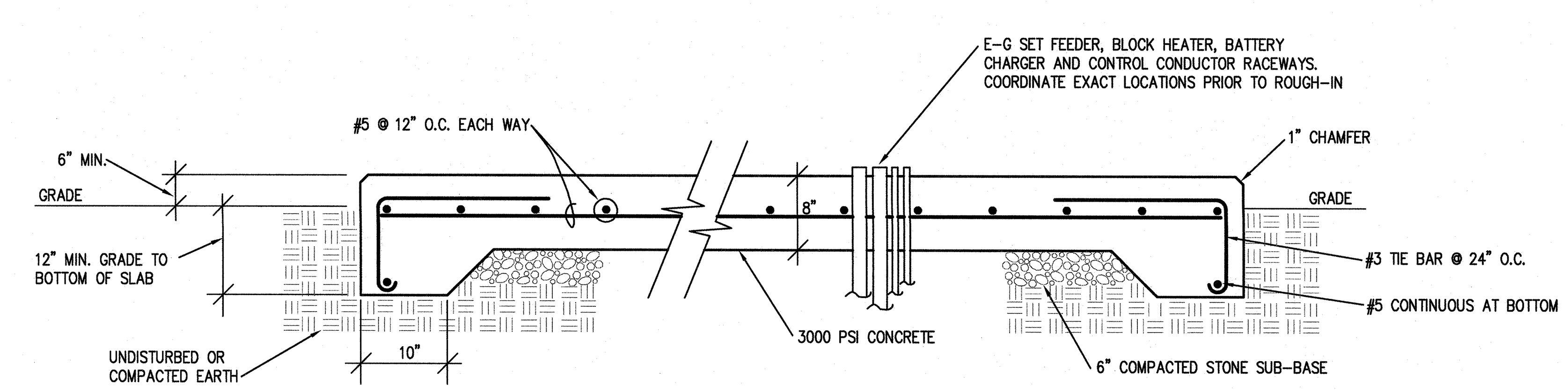

NOTE: FIELD VERIFY EXACT PAD SIZE REQUIREMENTS AND RACEWAY STUB-UP LOCATIONS WITH ENGINE-GENERATOR VENDOR AND ENGINEER PRIOR TO POURING OF PAD

9 - Engine Generator Concrete Pad Detail
Not to Scale

McFadyen Engineers, PLLC
4411 Peachtree Avenue Wilmington, NC 28403 Phone : 910.399.1125

© Copyright 2020 McFadyen Engineers, PLLC NC# P-1010

BOWMAN MURRAY HEMINGWAY ARCHITECTS
514 Market Street
Wilmington, NC 28406
Tel - (910) 762-2621
Fax - (910) 762-8506

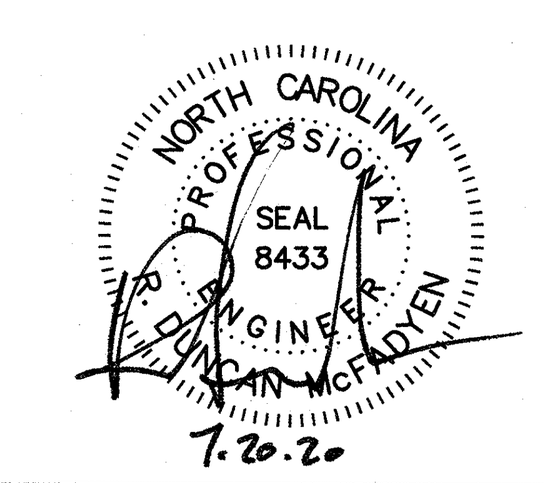

THE DAVIS COMMUNITY Central Services Center
1011 Porter's Neck Road
Wilmington, North Carolina 28411

REV.	DATE	DESCRIPTION

NO.	DATE	ISSUE NOTE
1	7-20-2020	PERMIT SET

Project Manager WPJ	Drawn By WPJ
Date July 20, 2020	Reviewed By RDM
Project ID	

Sheet Title
Electrical Details

Sheet No.
E005

Lighting Fixture Schedule

MARK	DESCRIPTION	SIZE/APERTURE	VOLTS	LAMPS	WATTS	LENS	TRIM/DOOR	TRIM COLOR	MOUNTING HEIGHT	REMARKS	MANUFACTURER
L1	LAY-IN GRID LED	2'x4'	UNIV.	7200 LUMEN 3500K LED	54	A19 0.156" ACRYLIC PRISMATIC	FLUSH STEEL	WHITE	RECESSED GRID MOUNTED	GZ10 0-10C, 10% DIMMING DRIVER, 80 CRI	LITHONIA "2GTL" SERIES
L1E	LAY-IN GRID LED	2'x4'	UNIV.	7200 LUMEN 3500K LED	54	A19 0.156" ACRYLIC PRISMATIC	FLUSH STEEL	WHITE	RECESSED GRID MOUNTED	GZ10 0-10C, 10% DIMMING DRIVER, 80 CRI E10WLCP LED EMERGENCY BATTERY PACK	LITHONIA "2GTL" SERIES
L2	LAY-IN GRID LED	2'x4'	UNIV.	6000 LUMEN 3500K LED	48	A19 0.156" ACRYLIC PRISMATIC	FLUSH STEEL	WHITE	RECESSED GRID MOUNTED	GZ10 0-10C, 10% DIMMING DRIVER, 80 CRI	LITHONIA "2GTL" SERIES
L2E	LAY-IN GRID LED	2'x4'	UNIV.	6000 LUMEN 3500K LED	48	A19 0.156" ACRYLIC PRISMATIC	FLUSH STEEL	WHITE	RECESSED GRID MOUNTED	GZ10 0-10C, 10% DIMMING DRIVER, 80 CRI E10WLCP LED EMERGENCY BATTERY PACK	LITHONIA "2GTL" SERIES
L3	PENDANT MOUNTED LED	4'	UNIV.	7000 LUMEN, 3500K LED	59	FST DROP LENS	_____	WHITE	AIRCRAFT CABLE PENDANT AT 9'-0"	0-10V 10% DIMMING DRIVER, 80 CRI	LITHONIA "HZL1D" SERIES
L3	PENDANT MOUNTED LED	4'	UNIV.	7000 LUMEN, 3500K LED	59	FST DROP LENS	_____	WHITE	AIR CRAFT CABLE PENDANT AT 9'-0"	0-10V 10% DIMMING DRIVER, 80 CRI, E10WLCP LED EMERGENCY BATTERY PACK	LITHONIA "HZL1D" SERIES
L4	PENDANT MOUNTED LED	4" x 96"	UNIV.	14000 LUMEN, 3500K LED	95	ROUND DIFFUSE	_____	WHITE	AIRCRAFT CABLE PENDANT MOUNTED AT 15'-0"	SEF PERFORMANCE PACKAGE, GZ10 0-10C, 10% DIMMING DRIVER, 80 CRI	LITHONIA "CLX" SERIES
L4A	PENDANT MOUNTED LED	4" x 96"	UNIV.	6000 LUMEN, 3500K LED	39	ROUND DIFFUSE	_____	WHITE	AIR CRAFT CABLE PENDANT MOUNTED AT 10'-0"	SEF PERFORMANCE PACKAGE, GZ10 0-10C, 10% DIMMING DRIVER, 80 CRI	LITHONIA "CLX" SERIES
L5	LAY-IN GRID LED	2'x4'	UNIV.	4800 LUMEN 3500K LED	30	A19 0.156" ACRYLIC PRISMATIC	FLUSH STEEL	WHITE	RECESSED GRID MOUNTED	GZ10 0-10C, 10% DIMMING DRIVER, 80 CRI	LITHONIA "2GTL" SERIES
L5E	LAY-IN GRID LED	2'x4'	UNIV.	4800 LUMEN 3500K LED	30	A19 0.156" ACRYLIC PRISMATIC	FLUSH STEEL	WHITE	RECESSED GRID MOUNTED	GZ10 0-10C, 10% DIMMING DRIVER, 80 CRI E10WLCP LED EMERGENCY BATTERY PACK	LITHONIA "2GTL" SERIES
L6	SURFACE MOUNTED LED WRAPAROUND	10"x4'	UNIV.	5000 LUMEN, 3500K LED	53	WHITE POLYCARBONATE	_____	WHITE	SURFACE CEILING	0-10V 10% DIMMING DRIVER, 80 CRI,	LITHONIA "FML4W" SERIES
L8	WALL MOUNTED LED	4'	UNIV.	5000 LUMEN, 3500K LED	41	FST DROP LENS	_____	WHITE	WALL MOUNTED AT 8'-6	0-10V 10% DIMMING DRIVER, 80 CRI	LITHONIA "HZL1D" SERIES
L8E	WALL MOUNTED LED	4'	UNIV.	5000 LUMEN, 3500K LED	41	FST DROP LENS	_____	WHITE	WALL MOUNTED AT 8'-6"	0-10V 10% DIMMING DRIVER, 80 CRI, E10WLCP LED EMERGENCY BATTERY PACK	LITHONIA "HZL1D" SERIES
L9	WALL MOUNTED LED	4'	UNIV.	7000 LUMEN, 3500K LED	59	FST DROP LENS	_____	WHITE	WALL MOUNTED AT 9'-0"	0-10V 10% DIMMING DRIVER, 80 CRI	LITHONIA "HZL1D" SERIES
L9E	WALL MOUNTED LED	4'	UNIV.	7000 LUMEN, 3500K LED	59	FST DROP LENS	_____	WHITE	WALL MOUNTED AT 9'-0"	0-10V 10% DIMMING DRIVER, 80 CRI, E10WLCP LED EMERGENCY BATTERY PACK	LITHONIA "HZL1D" SERIES
L10	WALL MOUNTED LED	22"	UNIV	1690 LUMEN, 3000K LED	18	WHITE ACRYLIC	STEEL	BRUSHED NICKEL	WALL OVER MIRROR	90 CRI	LUMENS "LTHP152354*" SERIES
L11	PENDANT MOUNTED LED	4'	UNIV.	7000 LUMEN, 3500K LED	59	FST DROP LENS	_____	WHITE	AIRCRAFT CABLE PENDANT AT STRUCTURE	0-10V 10% DIMMING DRIVER, 80 CRI,	LITHONIA "HZL1D" SERIES
L11A	SURFACE MOUNTED LED	4'	UNIV.	5000 LUMEN, 3500K LED	41	FST DROP LENS	_____	WHITE	AIRCRAFT CABLE PENDANT AT STRUCTURE	0-10V 10% DIMMING DRIVER, 80 CRI,	LITHONIA "HZL1D" SERIES
L12	WALL MOUNTED LED AREA LIGHT	11.5"X9"	UNIV.	3000 LUMEN, 4000K LED	10	_____	DIE CAST ALUMINUM	DSSXD SANDSTONE	WALL AT 8'-6"	VF DISTRIBUTION, WET LOCATION LISTING	LITHONIA "WDGE2 LED"SERIES
L12E	WALL MOUNTED LED AREA LIGHT	11.5"X9"	UNIV.	3000 LUMEN 4000K LED	10	_____	DIE CAST ALUMINUM	DSSXD SANDSTONE	WALL AT 8'-6"	VF DISTRIBUTION, WET LOCATION LISTING	LITHONIA "WDGE2 LED"SERIES
L13E	WALL MOUNTED LED RLM DOME	11"x18"	UNIV.	870 LUMEN 4000K LED	11	_____	SPUN GALVANIZED STEEL	GLOSS WHITE	PENDANT MOUNTED BOTTOM OF FIXTURE AT 9'-6 "AFF	LDS96WL PREWIRED LEADS, ST STEM LENGTH AS REQUIRED, WET LOCATION LISTING REMOTE 1400 LUMEN EMERGENCY BATTERY BACKUP	LSI ABOLITE "RD 300" SERIES
L14	WALL MOUNTED LED SIGNAGE LIGHT	13.5 x 11"	120	810 LUMEN 4000K LED	11	_____	SPUN GALVANIZED STEEL	GLOSS WHITE	WALL MOUNTED BOTTOM OF FIXTURE AT 11'-0"	LDS96WL PREWIRED LEADS, DO DIRECTIONAL OPTICS, GB P 3P GWT GOOSENECK WALL BRACKET, WET LOCATION LISTING	LSI ABOLITE "AD 200" SERIES
X1	EXIT LIGHT	_____	UNIV.	RED LED	5	_____	POLYCARBONATE	WHITE	FLUSH CEILING	RED LED, 6" LETTERS, SINGLE OR DOUBLE FACE UNITS AND CHEVRONS AS INDICATED, INTERNAL 90 MINUTE BATTERY BACKUP, SELF-DIAGNOSTICS	LITHONIA "LQM" SERIES
X2	EXIT LIGHT	_____	UNIV.	RED LED	5	_____	POLYCARBONATE	WHITE	WALL OVER DOOR	RED LED, 6" LETTERS, SINGLE OR DOUBLE FACE UNITS AND CHEVRONS AS INDICATED, INTERNAL 90 MINUTE BATTERY BACKUP, SELF-DIAGNOSTICS	LITHONIA "LQM" SERIES
E1	EMERGENCY LIGHT	_____	UNIV.	2-1.5W LED	3	_____	POLYCARBONATE	WHITE	WALL / 7'-6"	INTERNAL 90 MINUTE BATTERY BACKUP, SELF-DIAGNOSTICS	LITHONIA "ELM2 LED" SERIES

NOTES:

1. ACRYLIC PRISMATIC LENSES SHALL BE 0.156" NOMINAL MINIMUM THICKNESS.
2. ALL EXIT AND EMERGENCY FIXTURES SHALL COMPLY WITH NCSBC STANDARDS AND HAVE AUTOMATIC TESTING DEVICES.
3. 2X4 LED EMERGENCY DRIVER SHALL PROVIDE 1400 MINIMUM LUMENS OUTPUT FOR 90 MINUTES MINIMUM.
4. PROVIDE LED EMERGENCY DRIVERS WITH RATINGS AND FIXTURE SPACING AS REQUIRED TO PROVIDE 1.0 FOOTCANDLE AVERAGE AND 0.1 FOOTCANDLE MINIMUM. PROVIDE COMPLETE POINT BY POINT ILLUMINATION STUDY FOR ALL SPACES WITH FIXTURES INDICATED TO BE PROVIDED WITH LED EMERGENCY DRIVERS.
5. LIGHTING FIXTURES HAVE BEEN SELECTED AND SPECIFIED TO ACHIEVE REQUIRED/DESIRED ILLUMINATION LEVELS AND OTHER CHARACTERISTICS IN THEIR RESPECTIVE AREAS. SPECIFIED FIXTURES HAVE SPECIFIC CHARACTERISTICS WHICH MAY CREATE UNIQUE ILLUMINATION RESULTS ESSENTIAL TO THE PROJECT. LIGHTING FIXTURES PROVIDED SHALL MEET THE AESTHETICS, DETAILS, AND SPECIFICATIONS STATED ABOVE AND IN THE DIVISION 26 SPECIFICATIONS, AND MOUNTING HEIGHTS AND SPACINGS SHOWN ON THE DRAWINGS. ANY DEVIATIONS FROM THE SPECIFIED FIXTURES SHALL DEEM ALL PARTIES IN THE SUPPLY CHAIN AND CONTRACTOR RESPONSIBLE FOR PROVIDING DETAILED COMPARISONS OF THE SPECIFIED FIXTURE AND THE PROPOSED FIXTURE FOR ARCHITECT AND ENGINEER REVIEW IN DETERMINING EQUALITY. PROVIDE COMPLETE POINT BY POINT ILLUMINATION STUDIES FOR ALL SUBSTITUTIONS.
6. SUBSTITUTIONS ARE ACCEPTABLE PROVIDED THE SUBSTITUTIONS, IN THE SOLE OPINION OF THE ARCHITECT/ENGINEER, ARE EQUAL TO THE SPECIFIED FIXTURE. SUBSTITUTE LIGHTING FIXTURES SHALL MEET THE SPECIFIED DESCRIPTION AND AESTHETICS OF THE SPECIFIED FIXTURE. LIGHTING FIXTURES HAVE BEEN SELECTED TO ACHIEVE THE REQUIRED/DESIRED ILLUMINATION LEVELS, EFFECTS AND CHARACTERISTICS IN THEIR RESPECTIVE AREAS. UNIQUE FIXTURE CHARACTERISTICS WHICH MAY CREATE PARTICULAR ILLUMINATION RESULTS ARE ESSENTIAL. ANY PROPOSED SUBSTITUTION SHALL INCLUDE THE DETAILED INFORMATION DESCRIBING THE LENSES, COLOR, REFLECTORS, REFRACTORS, HOUSING MATERIALS, FINISHES, LAMPS AND LIGHT ENGINES, ETC. COMPLETE PHOTOMETRIC INFORMATION SHALL BE PROVIDED AND INCLUDE POINT BY POINT STUDIES FOR THE ACTUAL SPACE AS REQUESTED BY THE ENGINEER.
7. FIXTURES INSTALLED IN CEILINGS AND INDICATED ON THE ARCHITECTURAL DRAWINGS AS HAVING INSULATION IN CONTACT WITH THE CEILING SURFACE SHALL BE MANUFACTURER "IC" RATED.
8. LED MODULES SHALL BE FIELD REPLACEABLE.

NOTE:
OCCUPANCY SENSOR WIRING SCHEMATICS ARE PROVIDED TO INDICATE SWITCHING FUNCTION(S) REQUIRED. COMPONENTS AND CONNECTIONS BETWEEN COMPONENTS ARE REPRESENTATIVE ONLY AND MAY NOT BE APPLICABLE FOR ALL MANUFACTURER'S DEVICES. CONSULT ACTUAL APPROVED DEVICE MANUFACTURER APPLICATION INFORMATION AND INSTALLATION INSTRUCTIONS FOR COMPONENTS AND WIRING REQUIRED BEFORE ROUGHING IN AND INSTALLING SYSTEMS.

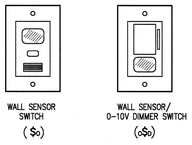

1 - Occupancy Sensor Wall Switch Plate Detail
NOT TO SCALE

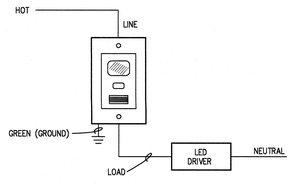

2 - Wall Box Occupancy Sensor Switch Wiring Diagram
NOT TO SCALE

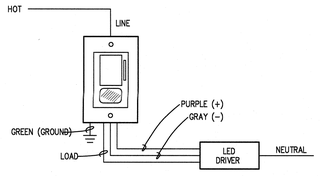

3 - Wall Box Combination Occupancy Sensor/0-10 Volt Dimmer Switch, Single Circuit Wiring Diagram
NOT TO SCALE

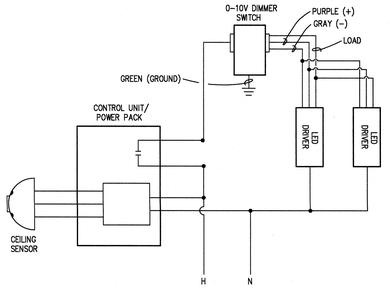

4 - Ceiling Mounted Occupancy Sensor, Wall Mounted 0-10 Volt Dimmer Switch, Single Circuit Wiring Diagram
NOT TO SCALE

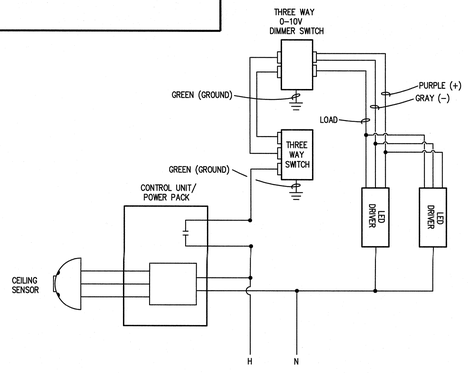

5 - Ceiling Mounted Occupancy Sensor, Wall Mounted Three Way, 0-10 Volt Dimmer Switch, Single Circuit Wiring Diagram
NOT TO SCALE

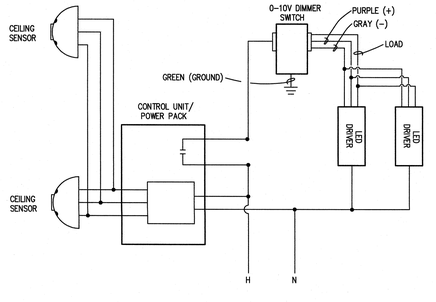

6 - Multiple Ceiling Mounted Occupancy Sensor, Wall Mounted 0-10 Volt Dimmer Switch, Single Circuit Wiring Diagram
NOT TO SCALE

McFadyen Engineers, PLLC
4411 Peachtree Avenue Wilmington, NC 28403 Phone : 910.399.1125

© Copyright 2020 McFadyen Engineers, PLLC NC# P-1010

BOWMAN MURRAY HEMINGWAY ARCHITECTS
514 Market Street
Wilmington, NC 28406
Tel - (910) 762-2621
Fax - (910) 762-8506

NORTH CAROLINA PROFESSIONAL SEAL 8433 ENGINEER ROBERT DAN MCFADYEN
7.20.20

THE DAVIS COMMUNITY
Central Services Center
1011 Porter's Neck Road
Wilmington, North Carolina 28411

REV.	DATE	DESCRIPTION
1	7-20-2020	PERMIT SET

NO.	DATE	ISSUE NOTE

Project Manager	Drawn By
WPJ	WPJ
Date	Reviewed By
July 20, 2020	RDM

Project ID

Sheet Title
Lighting Fixture Schedule and Details

Sheet No.
E006

McFadyen Engineers, PLLC
4411 Peachtree Avenue Wilmington, NC 28403 Phone : 910.399.1125
© Copyright 2020 McFadyen Engineers, PLLC
NC# P-1010

BOWMAN MURRAY HEMINGWAY
ARCHITECTS
514 Market Street
Wilmington, NC 28406
Tel - (910) 762-2621
Fax - (910) 762-8506

NORTH CAROLINA PROFESSIONAL SEAL 8433 ENGINEER JORDAN McFADYEN
7.21.20

Fire Alarm Legend

F	FIRE ALARM MANUAL STATION, 48" AFF
WP F	WEATHERPROOF FIRE ALARM MANUAL STATION, 48" AFF
75 F	FIRE ALARM AURAL/VISUAL DEVICE, 80" AFF, "75" INDICATED CANDELLA RATING
75 F	FIRE ALARM AURAL/VISUAL DEVICE, CEILING MOUNTED, "75" INDICATED CANDELLA RATING
WP 75 F	WEATHERPROOF FIRE ALARM AURAL/VISUAL DEVICE, 80" AFF, "75" INDICATED CANDELLA RATING
15 S	FIRE ALARM VISUAL (ONLY) DEVICE, 80" AFF, "15" INDICATES CANDELLA RATING
15 F	FIRE ALARM VISUAL (ONLY) DEVICE, CEILING MOUNTED, "15" INDICATES CANDELLA RATING
S	SMOKE DETECTOR, CEILING MOUNTED
H	HEAT DETECTOR, CEILING MOUNTED
I	FIRE ALARM ISOLATION MODULE
C	FIRE ALARM SYSTEM CONTROL MODULE
M	FIRE ALARM SYSTEM MONITOR MODULE
TB	FIRE ALARM SYSTEM TERMINAL BOX

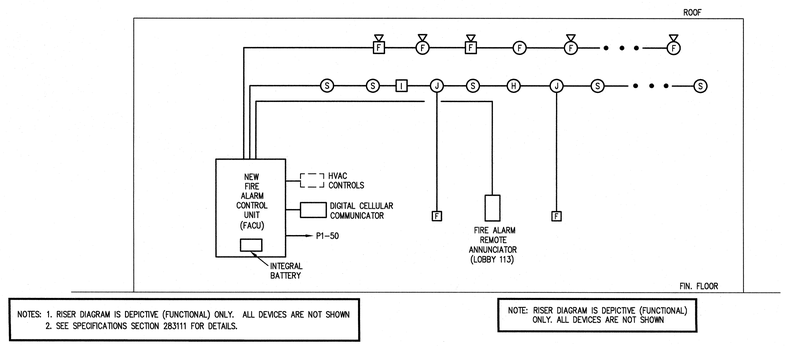

NOTES: 1. RISER DIAGRAM IS DEPICTIVE (FUNCTIONAL) ONLY. ALL DEVICES ARE NOT SHOWN
2. SEE SPECIFICATIONS SECTION 283111 FOR DETAILS.

NOTE: RISER DIAGRAM IS DEPICTIVE (FUNCTIONAL) ONLY. ALL DEVICES ARE NOT SHOWN

1 - Functional Fire Alarm Riser Diagram
NOT TO SCALE

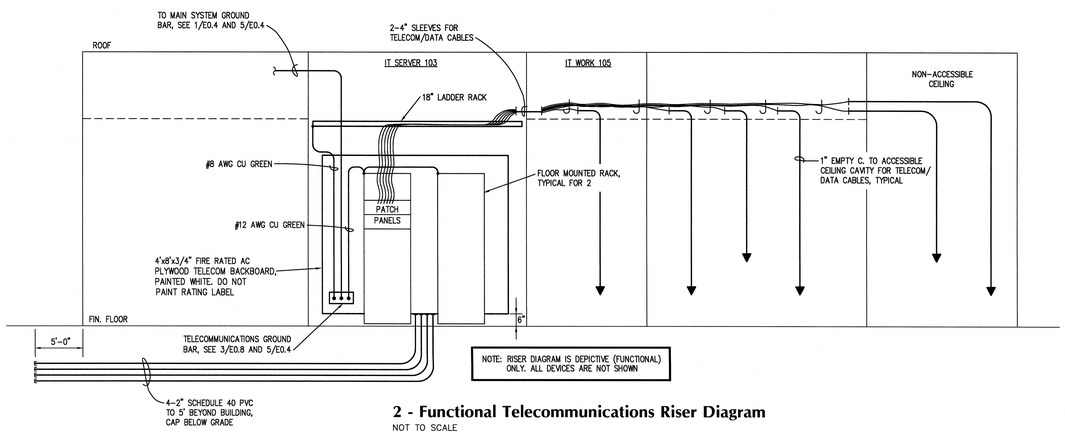

NOTE: RISER DIAGRAM IS DEPICTIVE (FUNCTIONAL) ONLY. ALL DEVICES ARE NOT SHOWN

2 - Functional Telecommunications Riser Diagram
NOT TO SCALE

THE DAVIS COMMUNITY
Central Services Center
1011 Porter's Neck Road
Wilmington, North Carolina 28411

REV.	DATE	DESCRIPTION

NO.	DATE	ISSUE NOTE
1	7-20-2020	PERMIT SET

Project Manager: WPJ	Drawn By: WPJ
Date: July 20, 2020	Reviewed By: RDM
Project ID	

Sheet Title
Functional Fire Alarm and Telecommunications Riser Diagrams

Sheet No.
E007

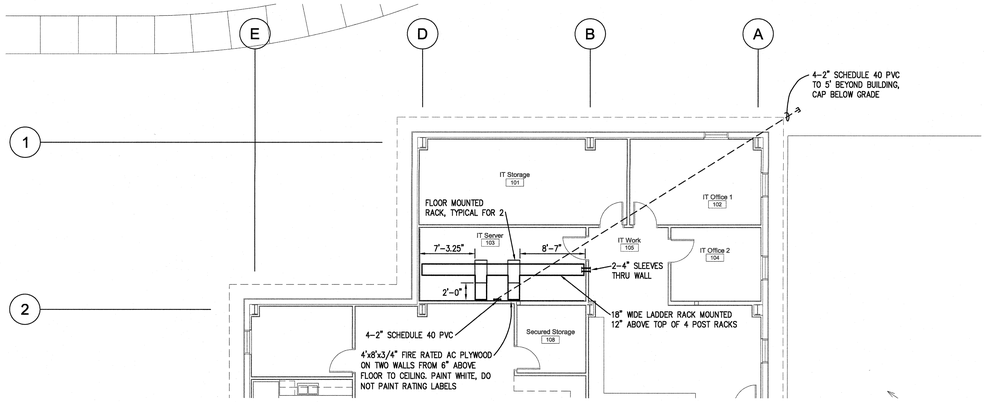

3 - IT Server 103 Plan
Scale: 1/8" = 1'-0"

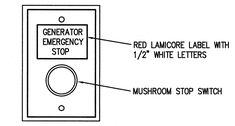

3 - E-G Set Emergency Stop Switch Detail
Not to Scale

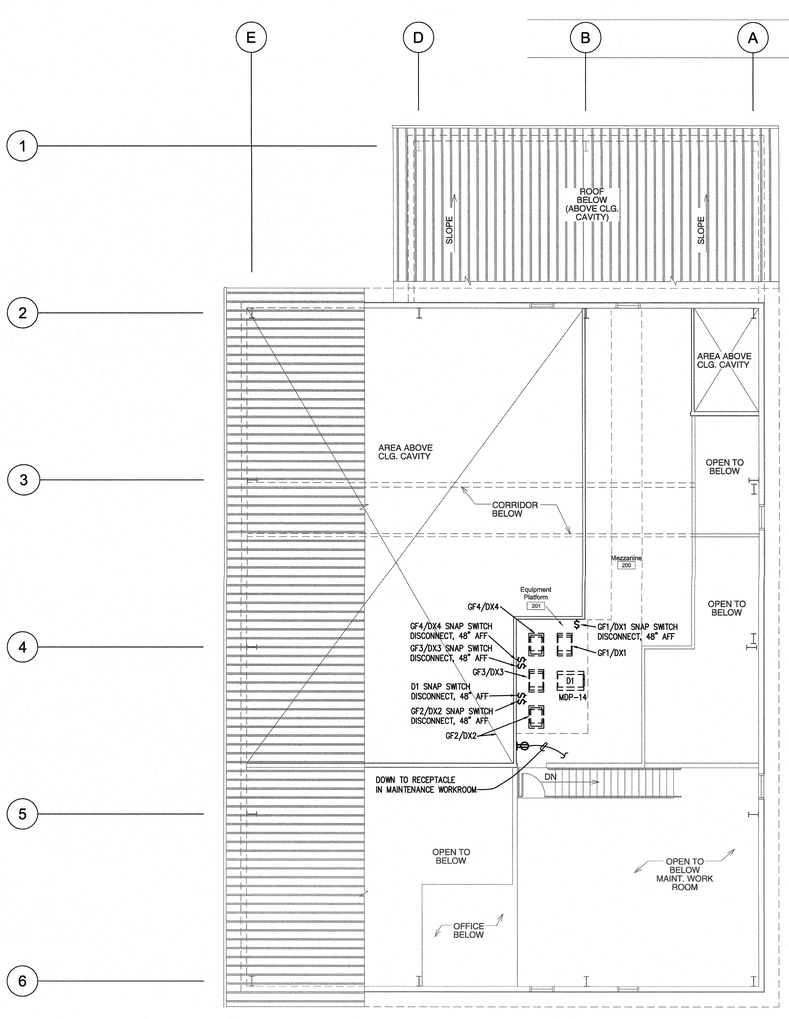

2 - Mezzanine Power Plan
Scale: 1/8" = 1'-0"

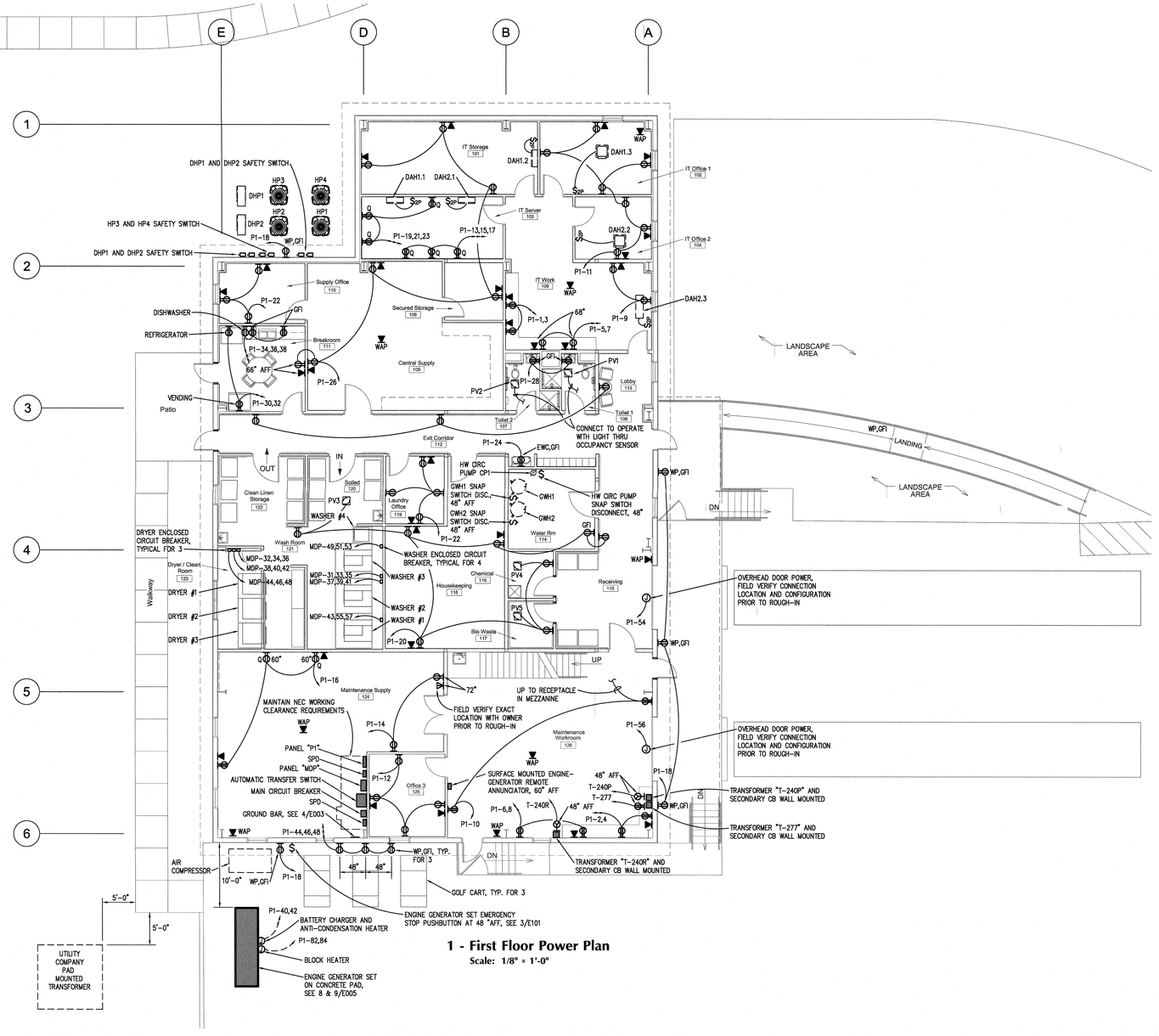

1 - First Floor Power Plan
Scale: 1/8" = 1'-0"

McFadyen Engineers, PLLC
4411 Peachtree Avenue Wilmington, NC 28403 Phone : 910.399.1125
© Copyright 2020 McFadyen Engineers, PLLC
NC# P-1010

BOWMAN MURRAY HEMINGWAY ARCHITECTS
514 Market Street
Wilmington, NC 28406
Tel - (910) 762-2621
Fax - (910) 762-8506

NORTH CAROLINA PROFESSIONAL SEAL 8433 ENGINEER CAM MCFADYEN
7.21.20

THE DAVIS COMMUNITY
Central Services Center
1011 Porter's Neck Road
Wilmington, North Carolina 28411

REV.	DATE	DESCRIPTION

NO.	DATE	ISSUE NOTE
1	7-20-2020	PERMIT SET

Project Manager: WPJ	Drawn By: WPJ
Date: July 20, 2020	Reviewed By: RDM
Project ID	

Sheet Title
Power Plans

Sheet No.
E101

McFadyen Engineers, PLLC
4411 Peachtree Avenue Wilmington, NC 28403 Phone : 910.399.1125
© Copyright 2020 McFadyen Engineers, PLLC
NC# P-1010

BOWMAN MURRAY HEMINGWAY ARCHITECTS
514 Market Street
Wilmington, NC 28406
Tel - (910) 762-2621
Fax - (910) 762-8506

NORTH CAROLINA PROFESSIONAL SEAL 8433 ENGINEER WILLIAM P. MCFADYEN
7-20-20

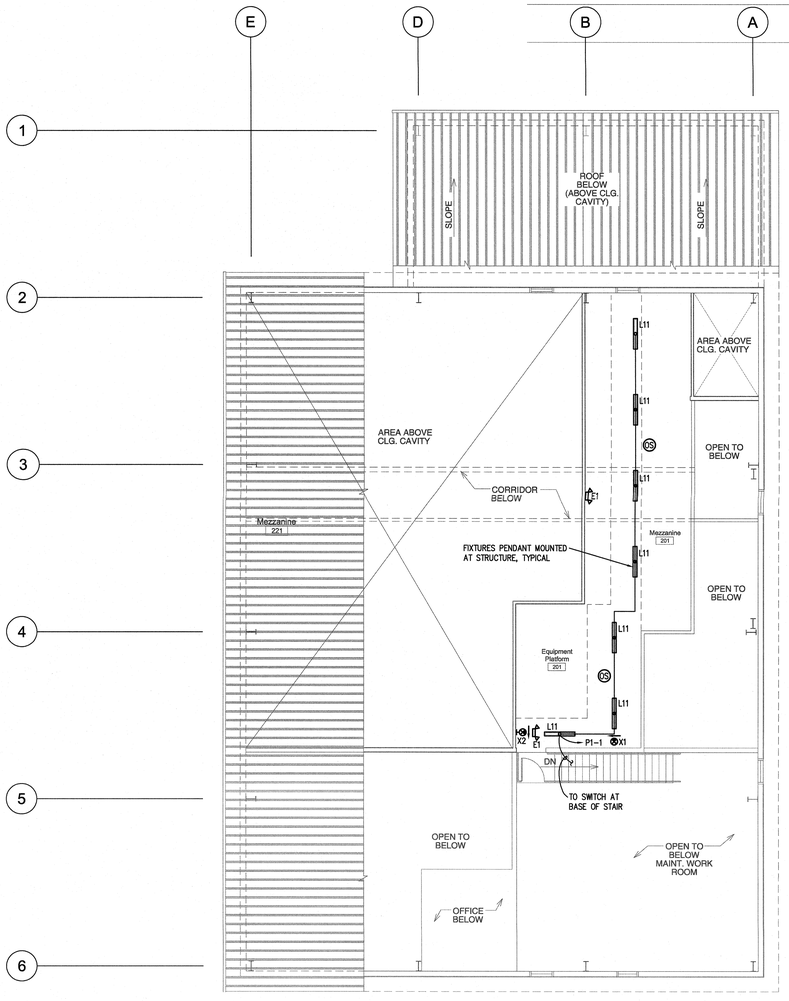

2 - Mezzanine Lighting Plan
Scale: 1/8" = 1'-0"

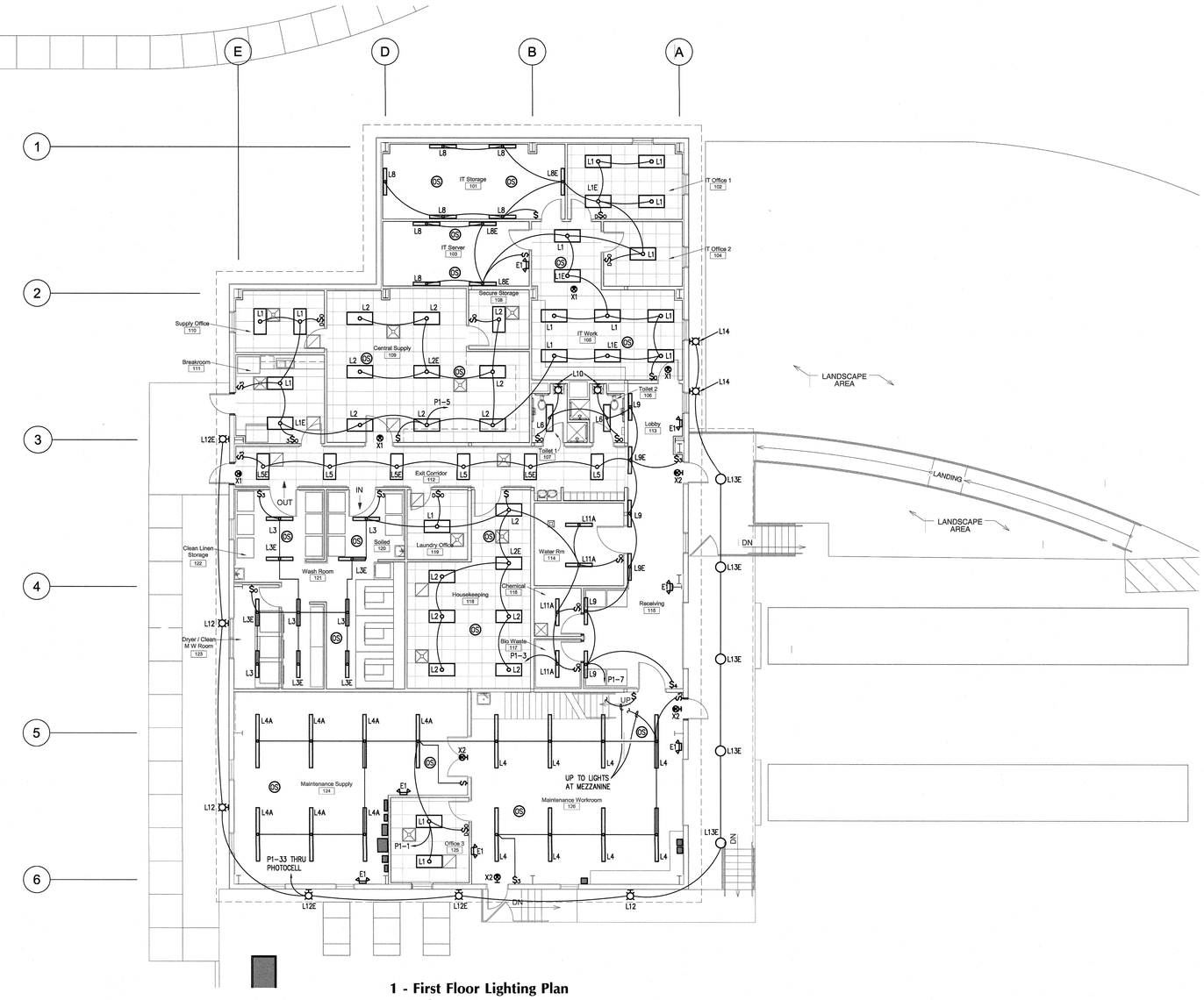

1 - First Floor Lighting Plan
Scale: 1/8" = 1'-0"

THE DAVIS COMMUNITY
Central Services Center

1011 Porter's Neck Road
Wilmington, North Carolina 28411

REV.	DATE	DESCRIPTION
1	7-20-2020	PERMIT SET

NO.	DATE	ISSUE NOTE

Project Manager	Drawn By
WPJ	WPJ
Date	Reviewed By
July 20, 2020	RDM
Project ID	

Sheet Title

Lighting Plans

Sheet No.

E102

McFadyen Engineers, PLLC
4411 Peachtree Avenue Wilmington, NC 28403 Phone: 910.399.1125
© Copyright 2020 McFadyen Engineers, PLLC
NC# P-1010

BOWMAN MURRAY HEMINGWAY ARCHITECTS
514 Market Street
Wilmington, NC 28406
Tel - (910) 762-2621
Fax - (910) 762-8506

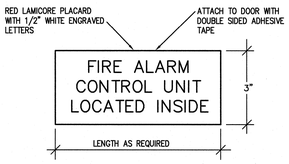

3 - FACU Placard Detail
Not to Scale

Fire Alarm System Control Matrix

SYSTEM INPUTS	NOTE	SYSTEM OUTPUTS: ACTUATE COMMON ALARM SIGNAL INDICATOR	ACTUATE NOTIFICATION APPLIANCES	ACTUATE COMMON TROUBLE SIGNAL INDICATOR	ACTUATE COMMON SUPERVISORY SIGNAL INDICATOR	ALARM SIGNAL TO MONITORING SERVICE	SUPERVISORY SIGNAL TO MONITORING SERVICE	TROUBLE SIGNAL TO MONITORING SERVICE	DISPLAY/PRINT CHANGE OF STATUS	RELEASE MAGNETICALLY HELD DOORS	SIGNAL HVAC CONTROL SYSTEM
SMOKE DETECTORS		X	X			X			X	X	X
HEAT DETECTORS		X	X			X			X	X	X
MANUAL PULL STATIONS		X	X			X			X	X	X
SYSTEM TROUBLE CONDITION				X				X			
LOSS OF FACU AC POWER	1			X				X			
GROUND FAULT				X				X			
SHORT CIRCUIT				X				X			
OPEN CIRCUIT				X				X			
AHU SHUTDOWN AND SMOKE DAMPER OVERRIDE SWITCH					X		X				

NOTES:
1. ONLY AFTER LOSS OF POWER FOR > 8 HOURS.
2. THIS IS A ABBREVIATED CONTROL MATRIX. REFER TO THE MECHANICAL DRAWINGS AND SPECIFICATIONS FOR ADDITIONAL REQUIREMENTS.

Fire Alarm Legend

F	FIRE ALARM MANUAL STATION, 48" AFF
WP F	WEATHERPROOF FIRE ALARM MANUAL STATION, 48" AFF
75 F	FIRE ALARM AURAL/VISUAL DEVICE, 80" AFF, "75" INDICATED CANDELLA RATING
75 F	FIRE ALARM AURAL/VISUAL DEVICE, CEILING MOUNTED, "75" INDICATED CANDELLA RATING
WP 75 F	WEATHERPROOF FIRE ALARM AURAL/VISUAL DEVICE, 80" AFF, "75" INDICATED CANDELLA RATING
15 S	FIRE ALARM VISUAL (ONLY) DEVICE, 80" AFF, "15" INDICATES CANDELLA RATING
15 F	FIRE ALARM VISUAL (ONLY) DEVICE, CEILING MOUNTED, "15" INDICATES CANDELLA RATING
S	SMOKE DETECTOR, CEILING MOUNTED
H	HEAT DETECTOR, CEILING MOUNTED
I	FIRE ALARM ISOLATION MODULE
C	FIRE ALARM SYSTEM CONTROL MODULE
M	FIRE ALARM SYSTEM MONITOR MODULE
TB	FIRE ALARM SYSTEM TERMINAL BOX

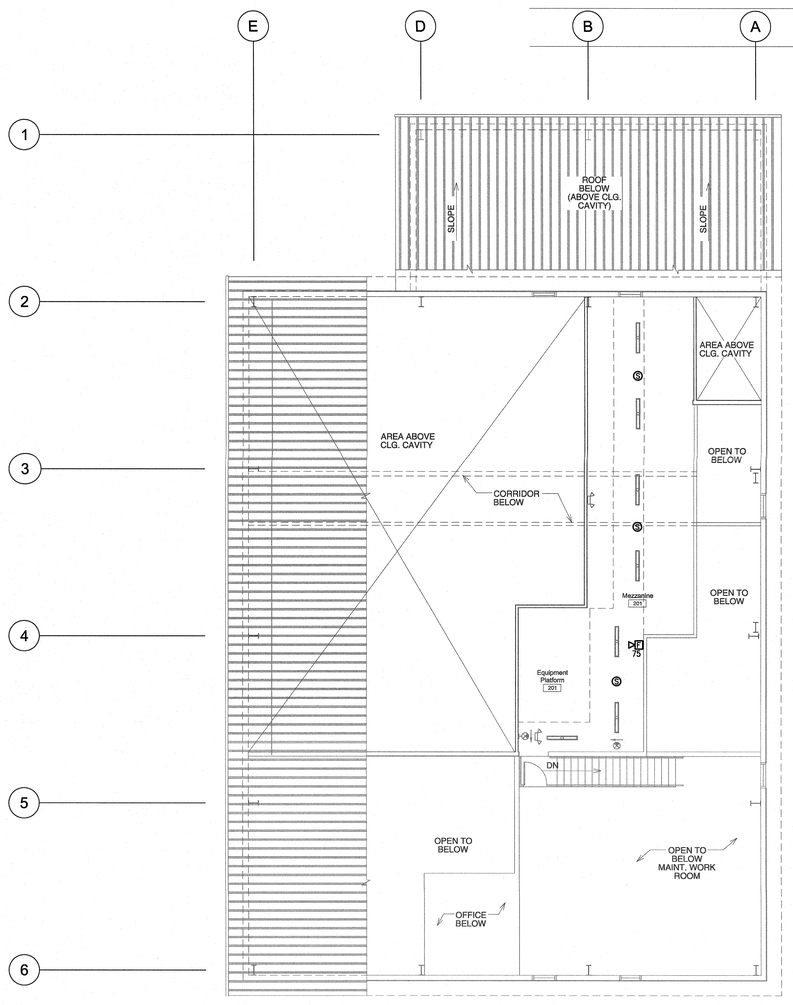

2 - Mezzanine Systems Plan
Scale: 1/8" = 1'-0"

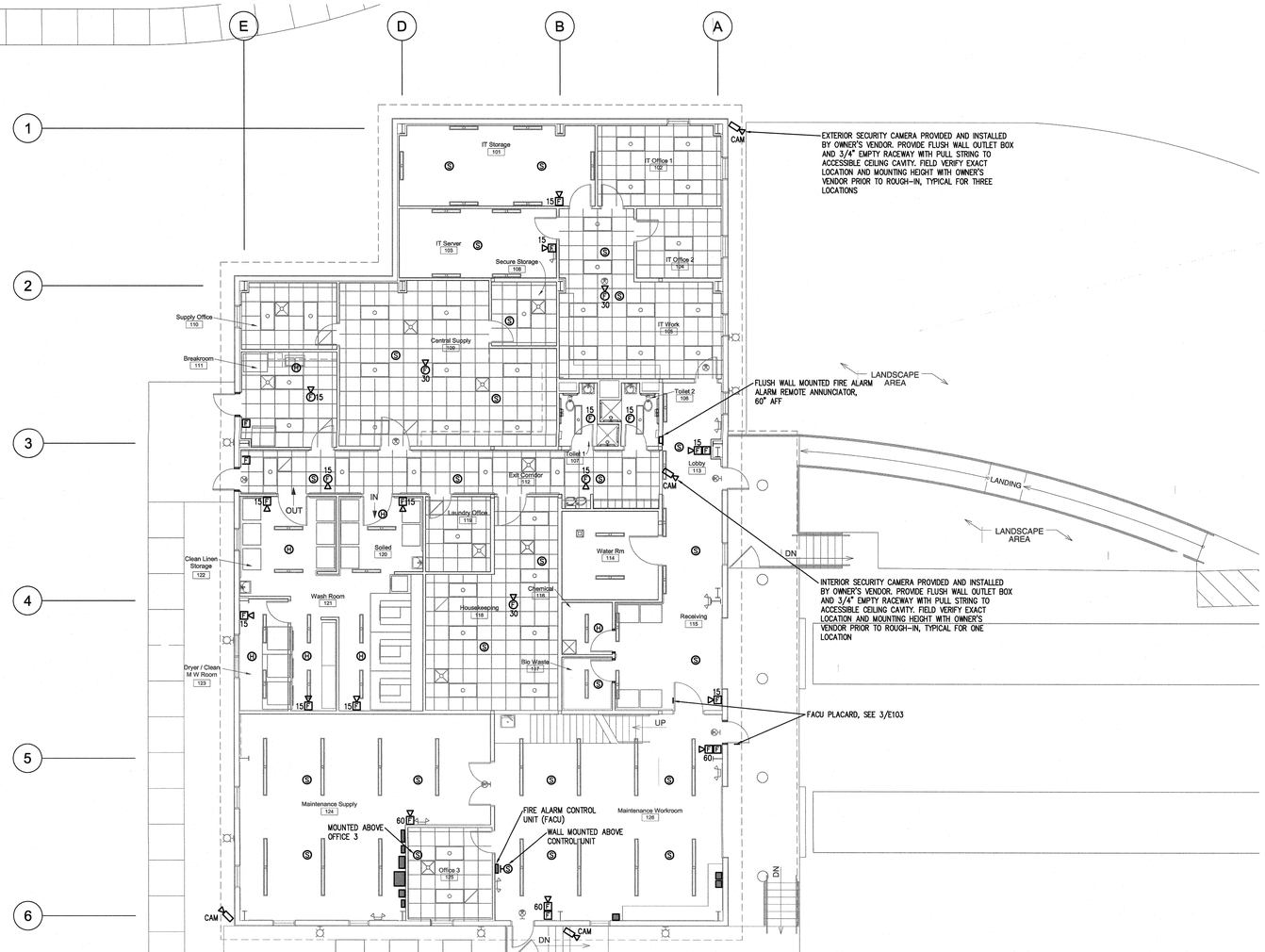

1 - First Floor Systems Plan
Scale: 1/8" = 1'-0"

NORTH CAROLINA PROFESSIONAL SEAL 8433 ENGINEER DUNCAN MCFADYEN 7-20-20

THE DAVIS COMMUNITY
Central Services Center
1011 Porter's Neck Road
Wilmington, North Carolina 28411

REV.	DATE	DESCRIPTION
1	7-20-2020	PERMIT SET

NO.	DATE	ISSUE NOTE

Project Manager: WPJ	Drawn By: WPJ
Date: July 20, 2020	Reviewed By: RDM
Project ID	

Sheet Title
Systems Plans, Legend and Fire Alarm System Control Matrix

Sheet No.
E103