SHT01

REVISIONS

ISSUED FOR BID 06 / 07 / 2020

BRUNSWICK REGIONAL WATER & SEWER H2GO

NORTH CAROLINA

WATER SUPPLY AND TREATMENT SYSTEM

CONTRACT 4

REVERSE OSMOSIS WATER TREATMENT PLANT

JUNE 2020

NORTH CAROLINA PROFESSIONAL SEAL 22531 ENGINEER CHARLES W. DAVIS
7-JUNE-20

NORTH CAROLINA PROFESSIONAL SEAL 040525 ENGINEER CARL W. SCHAEFER
7-JUNE-20

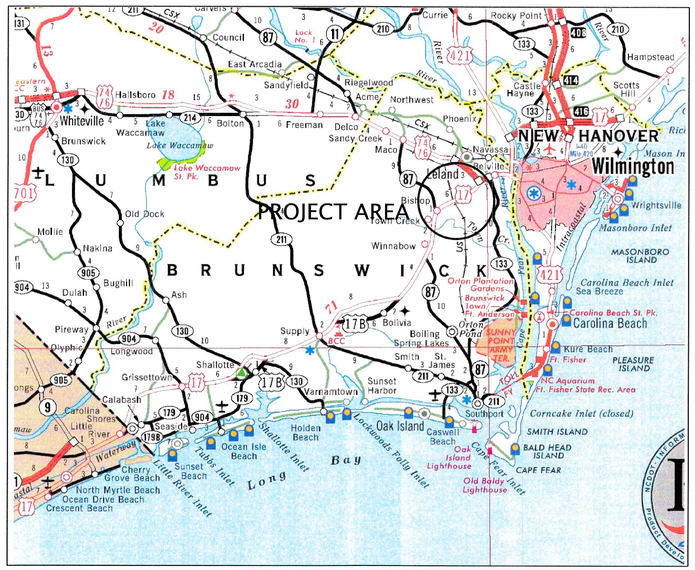

VICINITY MAP
NOT TO SCALE

DIRECTOR
BOB WALKER

COMMISSIONERS
RON JENKINS, CHAIRMAN
STEVE HOSMER, VICE CHAIRMAN
RODNEY McCOY, SECRETARY
BARRY LAUB
BILL BEER

THE WOOTEN COMPANY
120 North Boylan Avenue Raleigh NC 27603-1423
919.828.0531 fax 919.834.3589
License Number: F-0115

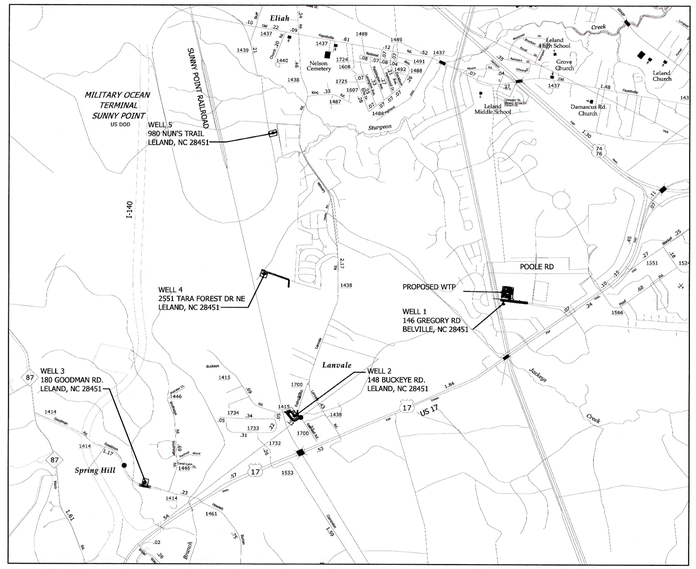

PROJECT AREA MAP
NOT TO SCALE

Print2PDFx.plt
0.0833 " / in.
plotnaghy
6/4/2020 10:29:36 AM
T:\Projects\Brunswick_Regional_W&S_H2CO-3081\AB-Water_Supply&Treatment_Plant\Sheets\WTP\X001-Cvr.dgn
X001-Cvr.dgn
BRUNSWICK REGIONAL W&S H2GO 3081.AB CONTRACT 4 REVERSE OSMOSIS WATER TREATMENT PLANT

INDEX OF SHEETS

1	X001	COVER SHEET
2	X002	INDEX OF SHEETS
3a	X003a	GENERAL BUILDING DATA - WTP BLDG
3b	X003b	GENERAL BUILDING DATA - CALCITE FACILITY
4	X004	LIFE SAFETY PLAN
5	X005	HYDRAULIC PROFILE
6	X006	NOTES, ABBREVIATIONS AND LEGEND
		EROSION & SEDIMENTATION CONTROL
7	EC010	OVERALL SITE PLAN
		CIVIL SITE WORK
8	C001	EXISTING SITE PLAN
9	C010	OVERALL SITE PLAN
10	C011	SITE GRADING PLAN
11	C012	SITE PIPING PLAN
12	C013	PARTIAL SITE PIPING PLAN AND DETAILS
13	C014	ASPHALT AND SIDEWALK PLAN
14	C015	ROOF DRAINAGE PLAN
15	C020	GREGORY ROAD NE EXTENSION PLAN & PROFILE
16	C021	GREGORY ROAD NE EXTENSION ROADWAY SECTIONS
17	L100	LANDSCAPE SITE PLAN
18	L101	LANDSCAPE DETAILS
19	C030	WELL HEAD PLAN
20	C040	WELL SITE 1
21	C050	WELL SITE 2
22	C060	WELL SITE 3
23	C070	WELL SITE 4
24	C080	WELL SITE 5
25	C090	CIVIL STANDARD DETAILS
26	C091	CIVIL STANDARD DETAILS
27	C092	CIVIL STANDARD DETAILS
28	C093	CIVIL STANDARD DETAILS
29	C094	CIVIL STANDARD DETAILS
		ARCHITECTURAL
30	A101	R.O. FLOOR PLAN
31	A102	REFLECTED CEILING PLAN
32	A103	ROOF PLAN
33	A104	FINISHED FLOOR PLAN
34	A105	ROOF DETAILS
35	A120	BUILDING ELEVATIONS
36	A130	BUILDING SECTIONS
37	A140	WALL SECTIONS
38	A141	WALL SECTIONS
39	A142	WALL SECTIONS AND DETAILS
40	A150	CASEWORK ELEVATIONS
41	A160	WINDOW/DOOR ELEVATIONS
42	A161	WINDOW/DOOR DETAILS
		PLUMBING
43	P100	PLUMBING COVER SHEET
44	P110	PLUMBING WATER DISTRIBUTION PLAN
45	P120	PLUMBING WASTE & VENT
46	P150	PLUMBING DETAILS
47	P160	PLUMBING RISER DIAGRAMS
		HVAC
48	H100	HVAC COVER SHEET
49	H110	HVAC DUCTWORK PLAN
50	H111	HVAC MECHANICAL PLATFORM PLAN
51	H120	HVAC PIPING PLAN
52	H121	HVAC PLATFORM PIPING PLAN
53	H150	HVAC DETAILS
54	H160	HVAC SCHEDULES
55	H161	HVAC SCHEDULES
		MECHANICAL
56	M100	BUILDING FLOOR PLAN
57	M101	RO FLOOR PLAN
58	M102	BUILDING SECTIONS
59	M103	BUILDING SECTIONS
60	M104	CARTRIDGE FILTERS - PLAN SECTION AND DETAILS
61	M105	CARTRIDGE FILTERS - SECTION AND DETAILS
62	M106	R.O. TRAINS - PLAN SECTION AND ELEVATIONS
63	M107	R.O. TRAINS - ELEVATIONS
64	M108	R.O. TRAIN FLUSH AND CLEAN SYSTEM
65	M109	SCALE INHIBITOR - PLAN, SECTIONS AND DETAIL
66	M110	CO2 FEED PANEL - PLAN AND DETAILS
67	M150	CHEMICAL FEED BUILDING FLOOR PLAN
68	M151	SODIUM HYPOCHLORITE ROOM - PLAN AND DETAILS
69	M152	SODIUM HYPOCHLORITE ROOM - SECTIONS AND DETAILS
70	M153	CORROSION INHIBITOR ROOM - PLAN, SECTION AND DETAIL
71	M154	CAUSTIC ROOM - PLAN, SECTIONS AND DETAILS
72	M155	SHOP / STORAGE ROOM - PLAN AND SECTION
73	M156	FLUORIDE FEED FACILITY
74	M200	CO2 FACILITY - PLAN AND SECTION
75	M300	CALCITE FACILITY - FLOOR PLAN
76	M301	CALCITE FACILITY - SECTIONS
77	M302	CALCITE FACILITY - SECTIONS AND DETAILS
78	M303	CALCITE FACILITY - ELEVATIONS
79	M400	GROUND STORAGE TANKS
80	M401	GROUND STORAGE TANK DETAILS
81	M402	GROUND STORAGE TANK DETAILS
82	M500	HIGH SERVICE PUMP STATION
83	M600	BACKWASH STORAGE
		MECHANICAL (CONT'D)
84	M700	RAW WATER VAULT
85	M710	TREATED WATER VAULT
86	M720	FINISHED WATER VAULT
87	M721	FINISHED WATER VAULT
88	M730	BACKFLOW PREVENTER VAULT
89	M740	BYPASS VAULT
90	M800	MECHANICAL STANDARD DETAILS
91	M801	MECHANICAL STANDARD DETAILS
		ELECTRICAL
92	E001	LEGEND AND GENERAL NOTES
93	E010	RO TREATMENT PLANT - OVERALL SITE PLAN
94	E011	RO TREATMENT PLANT-DUCTBANK SCHEDULES
95	E012	RO TREATMENT PLANT-DUCTBANK SCHEDULES
96	E040	WELL NO. 1 PLAN, SINGLE LINE DIAGRAM, & CONTROL ONE-LINE DIAGRAM
97	E041	WELL NO. 1 EQUIPMENT RACK ELEVATION & PANEL SCHEDULE
98	E042	WELL NO. 1 ELEMENTARY CONTROL SCHEMATIC & CONDUIT & WIRE SCHEDULES
99	E050	WELL NO. 2 PLAN, SINGLE LINE DIAGRAM, & CONTROL ONE-LINE DIAGRAM
100	E051	WELL NO. 2 EQUIPMENT RACK ELEVATION & PANEL SCHEDULE
101	E052	WELL NO. 2 ELEMENTARY CONTROL SCHEMATIC & CONDUIT & WIRE SCHEDULES
102	E060	WELL NO. 3 PLAN, SINGLE LINE DIAGRAM, & CONTROL ONE-LINE DIAGRAM
103	E061	WELL NO. 3 EQUIPMENT RACK ELEVATION & PANEL SCHEDULE
104	E062	WELL NO. 3 ELEMENTARY CONTROL SCHEMATIC & CONDUIT & WIRE SCHEDULES
105	E070	WELL NO. 4 PLAN, SINGLE LINE DIAGRAM, & CONTROL ONE-LINE DIAGRAM
106	E071	WELL NO. 4 EQUIPMENT RACK ELEVATION & PANEL SCHEDULE
107	E072	WELL NO. 4 ELEMENTARY CONTROL SCHEMATIC & CONDUIT & WIRE SCHEDULES
108	E080	WELL NO. 5 PLAN, SINGLE LINE DIAGRAM, & CONTROL ONE-LINE DIAGRAM
109	E081	WELL NO. 5 EQUIPMENT RACK ELEVATION & PANEL SCHEDULE
110	E082	WELL NO. 5 ELEMENTARY CONTROL SCHEMATIC & CONDUIT & WIRE SCHEDULES
111	E100	RO TREATMENT BUILDING OVERALL POWER PLAN
112	E101	RO TREATMENT BUILDING OVERALL SYSTEMS PLAN
113	E102	RO TREATMENT BUILDING ENLARGED POWER & LIGHTING PLAN
114	E103	RO TREATMENT BUILDING ENLARGED POWER & LIGHTING PLAN
115	E104	RO TREATMENT BUILDING ENLARGED POWER & LIGHTING PLAN
116	E105	RO TREATMENT BUILDING SWBD-RO SINGLE LINE DIAGRAM & ELEVATION
117	E106	RO TREATMENT BUILDING SWBD-RO SINGLE LINE DIAGRAM & ELEVATION
118	E107	RO TREATMENT BUILDING MCC-RO SINGLE LINE DIAGRAM & ELEVATION
119	E108	RO TREATMENT BUILDING PANEL SCHEDULES & RISER DIAGRAMS
120	E109	RO TREATMENT BUILDING CONTROL ONE-LINE DIAGRAMS
121	E110	RO TREATMENT BUILDING CONTROL ONE-LINE DIAGRAMS
122	E111	RO TREATMENT BUILDING CONTROL ONE-LINE DIAGRAMS
123	E112	RO TREATMENT BUILDING ELEMENTARY CONTROL SCHEMATICS
124	E113	RO TREATMENT BUILDING ELEMENTARY CONTROL SCHEMATICS
125	E114	RO TREATMENT BUILDING CONDUIT & WIRE SCHEDULES
126	E115	RO TREATMENT BUILDING CONDUIT & WIRE SCHEDULES
127	E116	RO TREATMENT BUILDING CONDUIT & WIRE SCHEDULES
128	E117	RO TREATMENT BUILDING CONDUIT & WIRE SCHEDULES
129	E156	FLUORIDE FEED FACILITY
130	E200	CO2 FACILITY POWER & LIGHTING PLAN
131	E300	CALCITE FACILITY POWER PLAN
132	E301	CALCITE FACILITY LIGHTING PLAN
133	E302	CALCITE FACILITY PANEL SCHEDULES & RISER DIAGRAMS
134	E303	CALCITE FACILITY CONTROL ONE-LINE DIAGRAM
135	E304	CALCITE FACILITY CONDUIT & WIRE SCHEDULES
136	E400	GROUND STORAGE FACILITY POWER PLAN
137	E500	HIGH SERVICE PUMP STATION POWER PLAN
138	E600	BACKWASH STORAGE FACILITY POWER PLAN
139	E700	RAW WATER VAULT POWER & LIGHTING PLAN
140	E710	TREATED WATER VAULT POWER & LIGHTING PLAN
141	E720	FINISHED WATER VAULT POWER & LIGHTING PLAN
142	E730	BACKFLOW PREVENTOR VAULT POWER & LIGHTING PLAN
143	E740	BYPASS VAULT POWER & LIGHTING
144	E800	ELECTRICAL STANDARD DETAILS SHEET NO.1
145	E801	ELECTRICAL STANDARD DETAILS SHEET NO.2
146	E802	ELECTRICAL STANDARD DETAILS SHEET NO.3
147	E803	ELECTRICAL STANDARD DETAILS SHEET NO. 4
		INSTRUMENTATION
148	I100	INSTRUMENTATION SYMBOLOGY
149	I101	P&ID-WELLS
150	I102	P&ID-RO PROCESS
151	I103	P&ID-CLEAN AND FLUSH
152	I104	P&ID-HYPOCHLORITE
153	I105	P&ID-CO2
154	I106	P&ID-CALCITE
155	I107	P&ID-POTABLE WATER TANK
156	I108	P&ID-RINSE STORAGE TANK
157	I109	P&ID-SCALANT
158	I110	P&ID-CAUSTIC
159	I111	P&ID-FLUORIDE
160	I112	P&ID-CORROSION
161	I113	INSTRUMENT CONTROL PANEL LAYOUTS
		STRUCTURAL
162	S101	TREATMENT BUILDING FOUNDATION PLAN
163	S102	TREATMENT BUILDING LOW ROOF & MEZZANINE FLOOR FRAMING PLANS
164	S103	TREATMENT BUILDING SECTIONS AND DETAILS
165	S104	TREATMENT BUILDING SECTIONS AND DETAILS
166	S105	TREATMENT BUILDING SECTIONS AND DETAILS
167	S106	TREATMENT BUILDING SECTIONS AND DETAILS
168	S107	TREATMENT BUILDING SECTIONS AND DETAILS
169	S108	TREATMENT BUILDING SECTIONS AND DETAILS
170	S109	TREATMENT BUILDING SECTIONS AND DETAILS
171	S110	TREATMENT BUILDING TYPICAL DETAILS AND GENERAL NOTES
172	S120	FLOURIDE BUILDING AND WELL HEADS FOUNDATION PLANS AND SECTIONS
173	S201	CO2 SYSTEM AND BUILDING FOUNDATION PLAN AND GENERAL NOTES
174	S202	CO2 SYSTEM AND BUILDING SECTIONS AND DETAILS
175	S301	CALCITE TREATMENT FACILITY FOUNDATION PLAN AND GENERAL NOTES
176	S302	CALCITE TREATMENT FACILITY PLATFORM FRAMING PLAN
177	S303	CALCITE TREATMENT FACILITY SECTIONS AND DETAILS
178	S304	CALCITE TREATMENT FACILITY SECTIONS AND DETAILS
179	S501	HIGH SERVICE PUMP STATION FOUNDATION PLAN, SECTIONS AND DETAILS
180	S601	NEW BACKWASH STORAGE TANK FOUNDATION PLAN AND GENERAL NOTES
181	S602	NEW BACKWASH STORAGE TANK SECTIONS AND TYPICAL DETAILS

REVISIONS

THE WOOTEN COMPANY
120 North Boylan Avenue Raleigh, NC 27603-1423
919.828.0531 fax 919.834.3589
License Number: F-0113

BRUNSWICK REGIONAL WATER AND SEWER H2GO
BRUNSWICK COUNTY NORTH CAROLINA
CONTRACT No 4
REVERSE OSMOSIS WATER TREATMENT PLANT

INDEX OF SHEETS

NORTH CAROLINA PROFESSIONAL SEAL 040525 ENGINEER JOHN W. SCHANCK III
6-JUNE-20

NORTH CAROLINA PROFESSIONAL SEAL 12531 REGISTERED LANDSCAPE ARCHITECT CHARLES W. DAVIS
6-JUNE-20

DESIGNED BY:	CWD
DRAWN BY:	PMD/EML
CHECKED BY:	CWD
PROJECT NO.:	3081-AB
DATE:	JUNE 7, 2020
SCALE:	AS NOTED

SHEET 2 OF 181

X002

Default
Print2PDFx.plt
600:0 sf:sl / in.
pdonaghy
6/4/2020 10:33:04 AM
T:\Projects\Brunswick_Regional_W&S_H2CO- 3081\AB-Water_Supply&Treatment_Plant\Sheets\WTP\X002_INDEX.dgn

X003a

2018 APPENDIX B
BUILDING CODE SUMMARY
FOR ALL COMMERCIAL PROJECTS
(EXCEPT 1 AND 2-FAMILY DWELLINGS AND TOWNHOUSES)
(Reproduce the following data on the building plans sheet 1 or 2)

Name of Project: BCRWASA Water Treatment Plant
Address: 146 Gregory Rd. N.E., Belville, NC Zip Code 28451
Owner/Authorized Agent: Bob Walker Phone # (901) 371.9949 E-Mail bwalker@h2go0nline
Owned By: [X] City/County [ ] Private [ ] State
Code Enforcement Jurisdiction: [ ] City _____ [X] County Brunswick [ ] State

CONTACT: Charles W. Davis 22531 919 828.0531

DESIGNER	FIRM	NAME	LICENSE #	TELEPHONE #	E-MAIL
Architectural	The Wooten Company	Russell D. Pearlman	6895	(919) 828.0531	rpearlman@thewootencompany.com
Civil	The Wooten Company	Charles W. Davis	22531	(919) 828.0531	cdavis@thewootencompany.com
Electrical	The Wooten Company	Robert E. Egan	16765	(919) 828.0531	began@thewootencompany.com
Fire Alarm	N/A			( )	
Plumbing	The Wooten Company	Glenn D. Bowman	039852	(919) 828.0531	gbowman@thewootencompany.com
Mechanical	The Wooten Company	Glenn D. Bowman	039852	(919) 828.0531	gbowman@thewootencompany.com
Sprinkler-Standpipe	N/A			( )	
Structural	HMC	Min-Chiang Hsu	11712	(919) 783.7288	hmc93@aol.com
Retaining Walls >5' High	N/A			( )	
Other	N/A			( )	

("Other" should include firms and individuals such as truss, precast, pre-engineered, interior designers, etc.)

2018 NC BUILDING CODE: [X] New Building [ ] Shell/Core [ ] 1st Time Interior Completions
[ ] Addition [ ] Phased Construction [ ] Shell Core
2018 EXISTING BUILDING CODE: [ ] Prescriptive [ ] Alteration Level I [ ] Historic Property
[ ] Repair [ ] Alteration Level II [ ] Change of Use
[ ] Chapter 14 [ ] Alteration Level III

CONSTRUCTED: (date) _____ CURRENT OCCUPANCY(S) (Ch.3): _____
RENOVATED: (date) _____ PROPOSED OCCUPANCY(S) (Ch.3): _____
RISK CATEGORY (Table 1604.5): Current: [ ] I [ ] II [ ] III [ ] IV
Proposed: [ ] I [ ] II [ ] III [ ] IV

BASIC BUILDING DATA
Construction Type: [ ] I-A [ ] II-A [ ] III-A [ ] IV [ ] V-A
(check all that apply) [ ] I-B [X] II-B [ ] III-B [ ] V-B
Sprinklers: [X] No [ ] Partial [ ] Yes [ ] NFPA 13 [ ] NFPA 13R [ ] NFPA 13D
Standpipes: [X] No [ ] Yes Class [ ] I [ ] II [ ] III [ ] Wet [ ] Dry
Primary Fire District: [X] No [ ] Yes Flood Hazard Area: [ ] No [ ] Yes
Special Inspections Required: [ ] No [ ] Yes (Contact the local inspection jurisdiction for additional procedures and requirements.)

Gross Building Area:

FLOOR	EXISTING (SQ FT)	NEW (SQ FT)	SUB-TOTAL
3rd Floor			
2nd Floor			
Mechanical Platform			
1st Floor		14,522	14,522
Basement			
TOTAL			14,522

ALLOWABLE AREA:
Primary Occupancy Classification(s):
Assembly [ ] A-1 [ ] A-2 [ ] A-3 [ ] A-4 [ ] A-5
Business [X]
Educational [ ]
Factory [ ] F-1 Moderate [X] F-2 Low
Hazardous [ ] H-1 Detonate [ ] H-2 Deflagrate [ ] H-3 Combust [ ] H-4 Health [ ] H-5 HPM
Institutional [ ] I-1 Condition [ ] 1 [ ] 2
[ ] I-2 Condition [ ] 1 [ ] 2
[ ] I-3 Condition [ ] 1 [ ] 2 [ ] 3 [ ] 4 [ ] 5
[ ] I-4
Mercantile [ ]
Residential [ ] R-1 [ ] R-2 [ ] R-3 [ ] R-4
Storage [ ] S-1 Moderate [X] S-2 Low [ ] High-piled
[ ] Parking Garage [ ] Open [ ] Enclosed [ ] Repair Garage
Utility and Miscellaneous [ ]

Accessory Occupancy Classification(s): A-3 (786 S.F.)
Incidental Uses (Table 509): _____
Special Uses (Chapter 4 - List Cose Sections): _____
Special Provisions: (Chapter 5 - List Code Sections): _____
Mixed Occupancy: [ ] No [X] Yes Separation: N/A Hr. Exception: N/A

[X] Non-Separated Use (508.3) - The required type of construction for the building shall be determined by applying the height and area limitations for each of the applicable occupancies to the entire building. The most restrictive type of construction, so determined, shall apply to the entire building.

[ ] Separated Use (508.4) - See below for area calculations for each story, the area of the occupancy shall be such be such that the sum of the ratios of the actual floor are of each use divided by the allowable floor area for each use shall not exceed 1.

$$\frac{\text{Actual Area of Occupancy A}}{\text{Allowable Area of Occupancy A}} + \frac{\text{Actual Area of Occupancy B}}{\text{Allowable Area of Occupancy B}} < 1$$

$$\frac{(S\text{-}2)\ 3{,}720}{26{,}000} + \frac{(B)\ 3{,}576}{23{,}000} + \frac{(F\text{-}2)\ 7{,}226}{23{,}000} + \ldots = 0.61 < 1.00$$

STORY NO.	DESCRIPTION AND USE	(A) BLDG AREA PER STORY (ACTUAL)	(B) TABLE 506.2[4] AREA	(C) AREA FOR FRONTAGE INCREASE[1,2]	(D) ALLOWABLE AREA PER STORY OR UNLIMITED[2,3]
1	Water Plant	14,522	23,000	17,250	40,250

1. Frontage area increases from Section 506.3are computed thus:
   a. Perimeter which fronts a public way or open space having 20 feet minimum width = 570 (F)
   b. Total Building Perimeter = 570 (P)
   c. Ratio (F/P) = 1 (F/P)
   d. W = Minimum width of public way = >30' (W)
   e. Percent of frontage increase I. = 100[F/P - 0.25] x W/30 = 75 (%)
2. Unlimited area applicable under conditions of Sections 507.
3. Maximum Building Area = total number of stories in the building x D (maximum 3 stories) (506.2).
4. The maximum area of open parking garages must comply with 406.5.4.
5. Frontage increase is based on the unsprinklered area value in Table 506.2.

ALLOWABLE HEIGHT

	ALLOWABLE	SHOWN ON PLANS	CODE REFERENCE
Building Height in Feet (Table 504.3)[1]	55	25	504.1
Building Height in Stories (Table 504.4)[1]	3	1	504.1

1. Provide code reference if the "Shown on Plans" quantity is not based on Table 504.3 or 504.4.
2. The maximum height of air traffic control towers must comply with Table 412.3.1.
3. The maximum height of open parking garages must comply with Table 406.5.4.

FIRE PROTECTION REQUIREMENTS

BUILDING ELEMENT	FIRE SEPARATION DISTANCE (FEET)	RATING REQ'D	RATING PROVIDED (W/ * REDUCTION)	DETAIL # AND SHEET #	DESIGN # FOR RATED ASSEMBLY (Note 1)	SHEET # FOR RATED PENETRATION	SHEET # FOR RATED JOINTS
Structural Frame, including columns, girders, trusses	>30'	0					
Bearing Walls	>30'	0					
Exterior							
North							
East							
West							
South							
Interior		0					
Nonbearing Walls and Partitions Exterior walls		0					
North							
East							
West							
South							
Interior walls and partitions		0	3		721.1 (2) 3-1.2		
Floor Construction including supporting beams and joists		0					
Floor Ceiling Assembly							
Columns Supporting Floors							
Roof Construction including supporting beams and joists							
Roof Ceiling Assembly		0					
Columns Supporting Roof							
Shaft Enclosures - Exit		N/A					
Shaft Enclosures - Other		N/A					
Corridor Separation		0					
Occupancy/Fire Barrier Separation		0					
Party/Fire Wall Separation		N/A					
Smoke Barrier Separation		N/A					
Smoke Partition		N/A					
Tenant/Dwelling Unit/ Sleeping Unit Separation		N/A					
Incidental Use Separation		N/A					

* Indicate section number permitting reduction
1. Prescriptive Fire Resistance per N.C. State Bldg. Code.

PERCENTAGE OF WALL OPENING CALCULATIONS

FIRE SEPARATION DISTANCE (feet) FROM PROPERTY LINES	DEGREE OF OPENINGS PROTECTION (TABLE 705.8)	ALLOWABLE AREA (%)	ACTUAL SHOWN ON PLANS (%)

LIFE SAFETY SYSTEM REQUIREMENTS

Emergency Lighting: [ ] No [X] Yes
Exit Signs: [ ] No [X] Yes
Fire Alarm: [X] No [ ] Yes
Smoke Detection Systems: [X] No [ ] Yes [ ] Partial ____
Carbon Monoxide Detection: [X] No [ ] Yes

LIFE SAFETY PLAN REQUIREMENTS

Life Safety Plan Sheet #: X-004

[ ] Fire and /or smoke rated wall locations (Chapter 7)
[X] Assumed and real property line locations (if not on the site plan)
[ ] Exterior wall opening area with respect to distance to assumed property lines (705.8)
[ ] Occupancy Use for each area as it relates to occupant load calculation (Table 1004.1.2)
[X] Occupant loads for each area
[X] Exit access travel distances (1017)
[X] Common path of travel distances [Table 1006.2.1 & 1006.3.2(1)]
[X] Dead end lengths (1020.4)
[X] Clear exit widths for each exit door
[X] Maximum calculated occupant load capacity each exit door can accomodate based on egress width (1005.3)
[ ] Actual occupants load for each exit door
[ ] A separate schematic plan indicating where fire rated floor/ceiling and/or roof structure is provided for purposes of occupancy separation
[ ] Location of doors with panic hardware (1010.1.10)
[ ] Location of doors with delayed egress locks and the amount of delay (1010.1.9.7)
[ ] Location of doors with electromagnetic egress locks (1010.1.9.9)
[ ] Location of doors equipped with hold-open devices
[ ] Location of emergency escape windows (1030)
[ ] The square footage of each fire area (202)
[ ] The square footage of each smoke compartment for Occupancy Classification I-2 (407.5)
[ ] Note any code exceptions or table notes that may have been utilized regarding the items above

ACCESSIBLE DWELLING UNITS
(SECTION 1107)

TOTAL UNITS	ACCESSIBLE UNITS REQUIRED	ACCESSIBLE UNITS PROVIDED	TYPE A UNITS REQUIRED	TYPE A UNITS PROVIDED	TYPE B UNITS REQUIRED	TYPE B UNITS PROVIDED	TOTAL ACCESSIBLE UNITS PROVIDED
N/A							

ACCESSIBLE PARKING
(SECTION 1106)

LOT OR PARKING AREA	TOTAL # OF PARKING SPACES		# OF ACCESSIBLE SPACES PROVIDED			TOTAL # ACCESSIBLE PROVIDED
	REQUIRED	PROVIDED	REGULAR WITH 5' ACCESS AISLE	VAN SPACES WITH 132" ACCESS AISLE	VAN SPACES WITH 8' ACCESS AISLE	
1	6	9	0	1	0	1
TOTAL						

PLUMBING FIXTURE REQUIREMENTS
(TABLE 2902.1)

USE		WATERCLOSETS			URINALS	LAVATORIES			SHOWERS /TUBS	DRINKING FOUNTAINS	
		Male	Female	Unisex		Male	Female	Unisex		REGULAR	ACCESSIBLE
SPACE	EXISTING										
	NEW	1	1	1	0	1	1	1	1	1	1
	REQUIRED	1	1	1	0	1	1	1	0	1	1

Note: Unisex Bathroom has additional W.C. and Lavatory

SPECIAL APPROVALS
Special approval: (Local Jurisdiction, Department of Insurance, OSC, DPI, DHHS, ICC, etc., describe below)

ENERGY SUMMARY

ENERGY REQUIREMENTS:
The following data shall be considered minimum and any special attribute required to meet the energy code shall also be provided. Each Designer shall furnish the required portions of the project information for the plan data sheet. If performance method, state the annual energy cost for the standard reference design vs annual energy cost for the proposed design.

Existing building envelope complies with code: [ ] No [ ] Yes (The remainder of this section is not applicable.)
Existing Building: [ ] No [ ] Yes(Provide code or statutory reference): _____
Climate Zone: [X] 3A [ ] 4A [ ] 5A
Method of Compliance:
Energy Code: [X] Prescriptive [ ] Performance
ASHRAE 90.1: [ ] Prescriptive [ ] Performance
(If "Other" specify source here)_____

THERMAL ENVELOPE: (Prescriptive method only)
Roof/ceiling Assembly (each assembly):
Description of assembly: Metal Roof, Batt Insulation r-5 Thermal blocks
U-Value of total assembly: 0.41
R-Value of insulation: R-10 + R-19
Skylights in each assembly:
U-Value of skylight:
total square footage of skylights in each assembly:
Exterior Walls (each assembly)
Description of assembly: A) 4" CMU, 2" Airspace, 2" Rigid Insulation, 8" CMU
Description of assembly: B) Metal Wall Panels, Batt Insulation
Description of assembly: C) Cementitious Board, 2" Airspace, 2" Rigid Insulation, 8" CMU
U-Value of total assembly: A) 0.072, B) 0.033, C) 0.074
R-Value of insulation: A) 10.0, B) 29.0, C) 10.0
Openings (windows or doors with glazing)
U-Value of assembly: 0.45
Solar heat gain coefficient: 0.25
projection factor: 0.26
Door R-Values: 5.00
Walls below grade (each assembly)
Description of assembly:
U-Value of total assembly: N/A
R-Value of insulation:
Floors over unconditioned space (each assembly)
Description of assembly:
U-Value of total assembly: N/A
R-Value of insulation:
Floors slab on grade
Description of assembly: 6" Reinforced Concrete Slab
U-Value of total assembly: 0.54
R-Value of insulation:
Horizontal/vertical requirement:
slab heated:

REVISIONS

THE WOOTEN COMPANY
120 North Boylan Avenue Raleigh, NC 27603-1423
919.828.0531 Fax 919.834.3589
License Number: F-0115

BRUNSWICK REGIONAL WATER AND SEWER H2GO
BRUNSWICK COUNTY NORTH CAROLINA
CONTRACT No. 4
REVERSE OSMOSIS WATER TREATMENT PLANT
GENERAL BUILDING DATA

RUSSELL D. PEARLMAN
REGISTERED ARCHITECT
6895
NORTH CAROLINA
RALEIGH, NC

DESIGNED BY: RDP
DRAWN BY: RTP
CHECKED BY: RDP
PROJECT NO.: 3081-AB
DATE: JUNE 7, 2020
SCALE: AS NOTED

SHEET 3a OF 181

X-003a

pdf2013.pltcfg
0.1.0000 " = in.
rpowell
6/3/2020 10:29:51 AM
T:\Projects\Brunswick_Regional_W&S_H2GO-3081\AB-Water_Supply&Treatment_Plant\Sheets\WTP\A-Sheets-RO.dgn

X003b

2018 APPENDIX B
BUILDING CODE SUMMARY
FOR ALL COMMERCIAL PROJECTS
(EXCEPT 1 AND 2-FAMILY DWELLINGS AND TOWNHOUSES)
(Reproduce the following data on the building plans sheet 1 or 2)

Name of Project: BCRWASA Calcite Facility
Address: 146 Gregory Rd. N.E., Belville, NC Zip Code 28451
Owner/Authorized Agent: Bob Walker Phone # (901) 371.9949 E-Mail bwalker@h2go0nline
Owned By: [X] City/County [ ] Private [ ] State
Code Enforcement Jurisdiction: [ ] City _____ [X] County Brunswick [ ] State

CONTACT: Charles W. Davis 22531 919 828.0531

DESIGNER	FIRM	NAME	LICENSE #	TELEPHONE #	E-MAIL
Architectural	N/A			( )	
Civil	The Wooten Company	Charles W. Davis	22531	(919) 828.0531	cdavis@thewootencompany.com
Electrical	The Wooten Company	Robert E. Egan	16765	(919) 828.0531	began@thewootencompany.com
Fire Alarm	N/A			( )	
Plumbing	N/A			( )	
Mechanical	N/A			( )	
Sprinkler-Standpipe	N/A			( )	
Structural	HMC	Min-Chiang Hsu	11712	(919) 783.7288	hmc93@aol.com
Retaining Walls >5' High	N/A			( )	
Other	N/A			( )	

("Other" should include firms and individuals such as truss, precast, pre-engineered, interior designers, etc.)

2018 NC BUILDING CODE: [X] New Building [ ] Shell/Core [ ] 1st Time Interior Completions
[ ] Addition [ ] Phased Construction — Shell Core
2018 EXISTING BUILDING CODE: [ ] Prescriptive [ ] Alteration Level I [ ] Historic Property
[ ] Repair [ ] Alteration Level II [ ] Change of Use
[ ] Chapter 14 [ ] Alteration Level III

CONSTRUCTED: (date) _____ CURRENT OCCUPANCY(S) (Ch.3): _____
RENOVATED: (date) _____ PROPOSED OCCUPANCY(S) (Ch.3): _____
RISK CATEGORY (Table 1604.5): Current: [ ] I [ ] II [ ] III [ ] IV
Proposed: [ ] I [ ] II [ ] III [ ] IV

BASIC BUILDING DATA
Construction Type: [ ] I-A [ ] II-A [ ] III-A [ ] IV [ ] V-A
(check all that apply) [ ] I-B [X] II-B [ ] III-B [ ] V-B
Sprinklers: [X] No [ ] Partial [ ] Yes [ ] NFPA 13 [ ] NFPA 13R [ ] NFPA 13D
Standpipes: [X] No [ ] Yes Class [ ] I [ ] II [ ] III [ ] Wet [ ] Dry
Primary Fire District: [X] No [ ] Yes Flood Hazard Area: [ ] No [ ] Yes
Special Inspections Required: [ ] No [ ] Yes (Contact the local inspection jurisdiction for additional procedures and requirements.)

Gross Building Area:

FLOOR	EXISTING (SQ FT)	NEW (SQ FT)	SUB-TOTAL
3rd Floor			
2nd Floor			
Mechanical Platform			
1st Floor		4,200	4,200
Basement			
TOTAL			4,200

ALLOWABLE AREA:
Primary Occupancy Classification(s):
Assembly [ ] A-1 [ ] A-2 [ ] A-3 [ ] A-4 [ ] A-5
Business [ ]
Educational [ ]
Factory [ ] F-1 Moderate [ ] F-2 Low
Hazardous [ ] H-1 Detonate [ ] H-2 Deflagrate [ ] H-3 Combust [ ] H-4 Health [ ] H-5 HPM
Institutional [ ] I-1 Condition [ ] 1 [ ] 2
[ ] I-2 Condition [ ] 1 [ ] 2
[ ] I-3 Condition [ ] 1 [ ] 2 [ ] 3 [ ] 4 [ ] 5
[ ] I-4
Mercantile [ ]
Residential [ ] R-1 [ ] R-2 [ ] R-3 [ ] R-4
Storage [ ] S-1 Moderate [ ] S-2 Low [ ] High-piled
[ ] Parking Garage [ ] Open [ ] Enclosed [ ] Repair Garage
Utility and Miscellaneous [X]

Accessory Occupancy Classification(s): _____
Incidental Uses (Table 509): _____
Special Uses (Chapter 4 - List Cose Sections): _____
Special Provisions: (Chapter 5 - List Code Sections): _____
Mixed Occupancy: [X] No [ ] Yes Separation: 3 Hr. Exception: N/A

[ ] Non-Separated Use (508.3) - The required type of construction for the building shall be determined by applying the height and area limitations for each of the applicable occupancies to the entire building. The most restrictive type of construction, so determined, shall apply to the entire building.

[ ] Separated Use (508.4) - See below for area calculations for each story, the area of the occupancy shall be such be such that the sum of the ratios of the actual floor are of each use divided by the allowable floor area for each use shall not exceed 1.

$$\frac{\text{Actual Area of Occupancy A}}{\text{Allowable Area of Occupancy A}} + \frac{\text{Actual Area of Occupancy B}}{\text{Allowable Area of Occupancy B}} < 1$$

$$\_\_\_ + \_\_\_ + \_\_\_ + \ldots\ldots = \_\_\_ < 1.00$$

STORY NO.	DESCRIPTION AND USE	(A) BLDG AREA PER STORY (ACTUAL)	(B) TABLE 506.2[1] AREA	(C) AREA FOR FRONTAGE INCREASE [1,2]	(D) ALLOWABLE AREA PER STORY OR UNLIMITED [2,3]
1	Tank Cover	4,200	34,000	25,000	59,500

1. Frontage area increases from Section 506.3are computed thus:
   a. Perimeter which fronts a public way or open space having 20 feet minimum width = 260 (F)
   b. Total Building Perimeter = 260 (P)
   c. Ratio (F/P) = 1 (F/P)
   d. W = Minimum width of public way = >30' (W)
   e. Percent of frontage increase I. = 100[F/P - 0.25] x W/30 = 75 (%)
2. Unlimited area applicable under conditions of Sections 507.
3. Maximum Building Area = total number of stories in the building x D (maximum 3 stories) (506.2).
4. The maximum area of open parking garages must comply with 406.5.4.
5. Frontage increase is based on the unsprinklered area value in Table 506.2.

ALLOWABLE HEIGHT

	ALLOWABLE	SHOWN ON PLANS	CODE REFERENCE
Building Height in Feet (Table 504.3)[1]	55	40	504.1
Building Height in Stories (Table 504.4)[1]	2	1	504.1

1. Provide code reference if the "Shown on Plans" quantity is not based on Table 504.3 or 504.4.
2. The maximum height of air traffic control towers must comply with Table 412.3.1.
3. The maximum height of open parking garages must comply with Table 406.5.4.

FIRE PROTECTION REQUIREMENTS

BUILDING ELEMENT	FIRE SEPARATION DISTANCE (FEET)	RATING REQ'D	RATING PROVIDED (W/ * REDUCTION)	DETAIL # AND SHEET #	DESIGN # FOR RATED ASSEMBLY	SHEET # FOR RATED PENETRATION	SHEET # FOR RATED JOINTS
Structural Frame, including columns, girders, trusses	>30'	0					
Bearing Walls	>30'	N/A					
Exterior							
North							
East							
West							
South							
Interior		N/A					
Nonbearing Walls and Partitions Exterior walls		N/A					
North							
East							
West							
South							
Interior walls and partitions		N/A					
Floor Construction Including supporting beams and joists		0					
Floor Ceiling Assembly							
Columns Supporting Floors							
Roof Construction Including supporting beams and joists							
Roof Ceiling Assembly		0					
Columns Supporting Roof							
Shaft Enclosures - Exit		N/A					
Shaft Enclosures - Other		N/A					
Corridor Separation		N/A					
Occupancy/Fire Barrier Separation		N/A					
Party/Fire Wall Separation		N/A					
Smoke Barrier Separation		N/A					
Smoke Partition		N/A					
Tenant/Dwelling Unit/ Sleeping Unit Separation		N/A					
Incidental Use Separation		N/A					

* Indicate section number permitting reduction

PERCENTAGE OF WALL OPENING CALCULATIONS N/A

FIRE SEPARATION DISTANCE (feet) FROM PROPERTY LINES	DEGREE OF OPENINGS PROTECTION (TABLE 705.8)	ALLOWABLE AREA (%)	ACTUAL SHOWN ON PLANS (%)

LIFE SAFETY SYSTEM REQUIREMENTS

Emergency Lighting: [X] No [ ] Yes
Exit Signs: [X] No [ ] Yes
Fire Alarm: [X] No [ ] Yes
Smoke Detection Systems: [X] No [ ] Yes [ ] Partial ____
Carbon Monoxide Detection: [X] No [ ] Yes

LIFE SAFETY PLAN REQUIREMENTS

Life Safety Plan Sheet #: X-003b

- [ ] Fire and /or smoke rated wall locations (Chapter 7)
- [X] Assumed and real property line locations (if not on the site plan)
- [ ] Exterior wall opening area with respect to distance to assumed property lines (705.8)
- [ ] Occupancy Use for each area as it relates to occupant load calculation (Table 1004.1.2)
- [X] Occupant loads for each area
- [X] Exit access travel distances (1017)
- [X] Common path of travel distances [Table 1006.2.1 & 1006.3.2(1)]
- [ ] Dead end lengths (1020.4)
- [ ] Clear exit widths for each exit door
- [ ] Maximum calculated occupant load capacity each exit door can accomodate based on egress width (1005.3)
- [ ] Actual occupants load for each exit door
- [ ] A separate schematic plan indicating where fire rated floor/ceiling and/or roof structure is provided for purposes of occupancy separation
- [ ] Location of doors with panic hardware (1010.1.10)
- [ ] Location of doors with delayed egress locks and the amount of delay (1010.1.9.7)
- [ ] Location of doors with electromagnetic egress locks (1010.1.9.9)
- [ ] Location of doors equipped with hold-open devices
- [ ] Location of emergency escape windows (1030)
- [ ] The square footage of each fire area (202)
- [ ] The square footage of each smoke compartment for Occupancy Classification I-2 (407.5)
- [ ] Note any code exceptions or table notes that may have been utilized regarding the items above

ACCESSIBLE DWELLING UNITS
(SECTION 1107)

TOTAL UNITS	ACCESSIBLE UNITS REQUIRED	ACCESSIBLE UNITS PROVIDED	TYPE A UNITS REQUIRED	TYPE A UNITS PROVIDED	TYPE B UNITS REQUIRED	TYPE B UNITS PROVIDED	TOTAL ACCESSIBLE UNITS PROVIDED
N/A							

ACCESSIBLE PARKING N/A
(SECTION 1106)

LOT OR PARKING AREA	TOTAL # OF PARKING SPACES		# OF ACCESSIBLE SPACES PROVIDED			TOTAL # ACCESSIBLE PROVIDED
	REQUIRED	PROVIDED	REGULAR WITH 5' ACCESS AISLE	VAN SPACES WITH 132" ACCESS AISLE	VAN SPACES WITH 8' ACCESS AISLE	
TOTAL						

PLUMBING FIXTURE REQUIREMENTS N/A
(TABLE 2902.1)

USE		WATERCLOSETS Male	WATERCLOSETS Female	WATERCLOSETS Unisex	URINALS	LAVATORIES Male	LAVATORIES Female	LAVATORIES Unisex	SHOWERS /TUBS	DRINKING FOUNTAINS REGULAR	DRINKING FOUNTAINS ACCESSIBLE
SPACE	EXISTING										
	NEW										
	REQUIRED										

Note: Unisex Bathroom has additional W.C. and Lavatory

SPECIAL APPROVALS
Special approval: (Local Jurisdiction, Department of Insurance, OSC, DPI, DHHS, ICC, etc., describe below)

ENERGY SUMMARY N/A

ENERGY REQUIREMENTS:
The following data shall be considered minimum and any special attribute required to meet the energy code shall also be provided. Each Designer shall furnish the required portions of the project information for the plan data sheet. If performance method, state the annual energy cost for the standard reference design vs annual energy cost for the proposed design.

Existing building envelope complies with code: [ ] No [ ] Yes (The remainder of this section is not applicable.)
Existing Building: [ ] No [ ] Yes(Provide code or statutory reference): _____
Climate Zone: [ ] 3A [ ] 4A [ ] 5A
Method of Compliance:
Energy Code: [ ] Prescriptive [ ] Performance
ASHRAE 90.1: [ ] Prescriptive [ ] Performance
(If "Other" specify source here)_____

THERMAL ENVELOPE: (Prescriptive method only)
Roof/ceiling Assembly (each assembly):
Description of assembly:
U-Value of total assembly:
R-Value of insulation:
Skylights in each assembly:
U-Value of skylight:
total square footage of skylights in each assembly:
Exterior Walls (each assembly)
Description of assembly:
Description of assembly:
Description of assembly:
U-Value of total assembly:
R-Value of insulation:
Openings (windows or doors with glazing)
U-Value of assembly:
Solar heat gain coefficient:
projection factor:
Door R-Values:
Walls below grade (each assembly)
Description of assembly:
U-Value of total assembly:
R-Value of insulation:
Floors over unconditioned space (each assembly)
Description of assembly:
U-Value of total assembly:
R-Value of insulation:
Floors slab on grade
Description of assembly:
U-Value of total assembly:
R-Value of insulation:
Horizontal/vertical requirement:
slab heated:

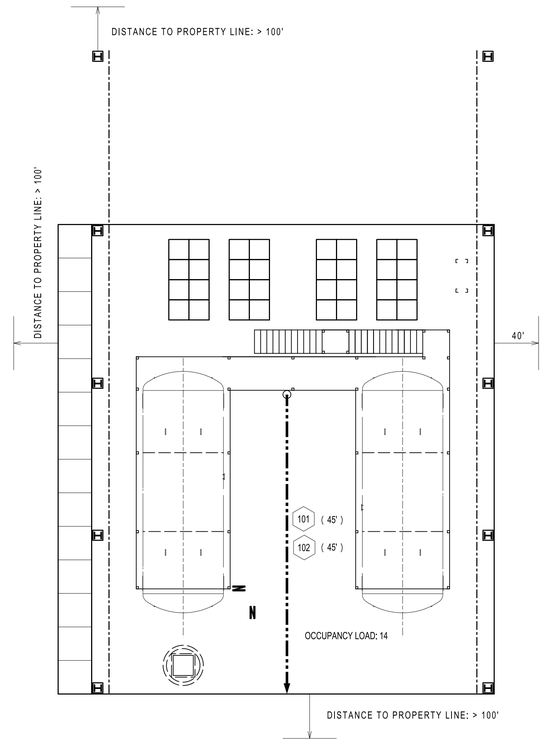

N
1 X-003b LIFE SAFETY PLAN
SCALE: 3/32" = 1'-0"

LIFE SAFETY PLAN KEYED NOTES:

( ) 101 EXIT ACCESS TRAVEL DISTANCE
( ) 102 COMMON PATH OF TRAVEL

REVISIONS

THE WOOTEN COMPANY
120 North Boylan Avenue Raleigh, NC 27603-1423
919.828.0531 Fax 919.834.3589
License Number: F-0115

BRUNSWICK REGIONAL WATER AND SEWER H2GO
BRUNSWICK COUNTY NORTH CAROLINA
CONTRACT No. 4
REVERSE OSMOSIS WATER TREATMENT PLANT
GENERAL BUILDING DATA

RUSSELL D. PEARLMAN REGISTERED ARCHITECT 6895 NORTH CAROLINA RALEIGH, NC

DESIGNED BY: RDP
DRAWN BY: RTP
CHECKED BY: RDP
PROJECT NO.: 3081-AB
DATE: JUNE 7, 2020
SCALE: AS NOTED

SHEET 3b OF 181

X-003b

pdf2013.pltcfg
0:1.0000 :=" in.
rpowell
6/3/2020 9:33:44 AM
T:\Projects\Brunswick_Regional_W&S_H2GO-3081\AB-Water_Supply&Treatment_Plant\Sheets\WTP\A-Sheets-RO.dgn

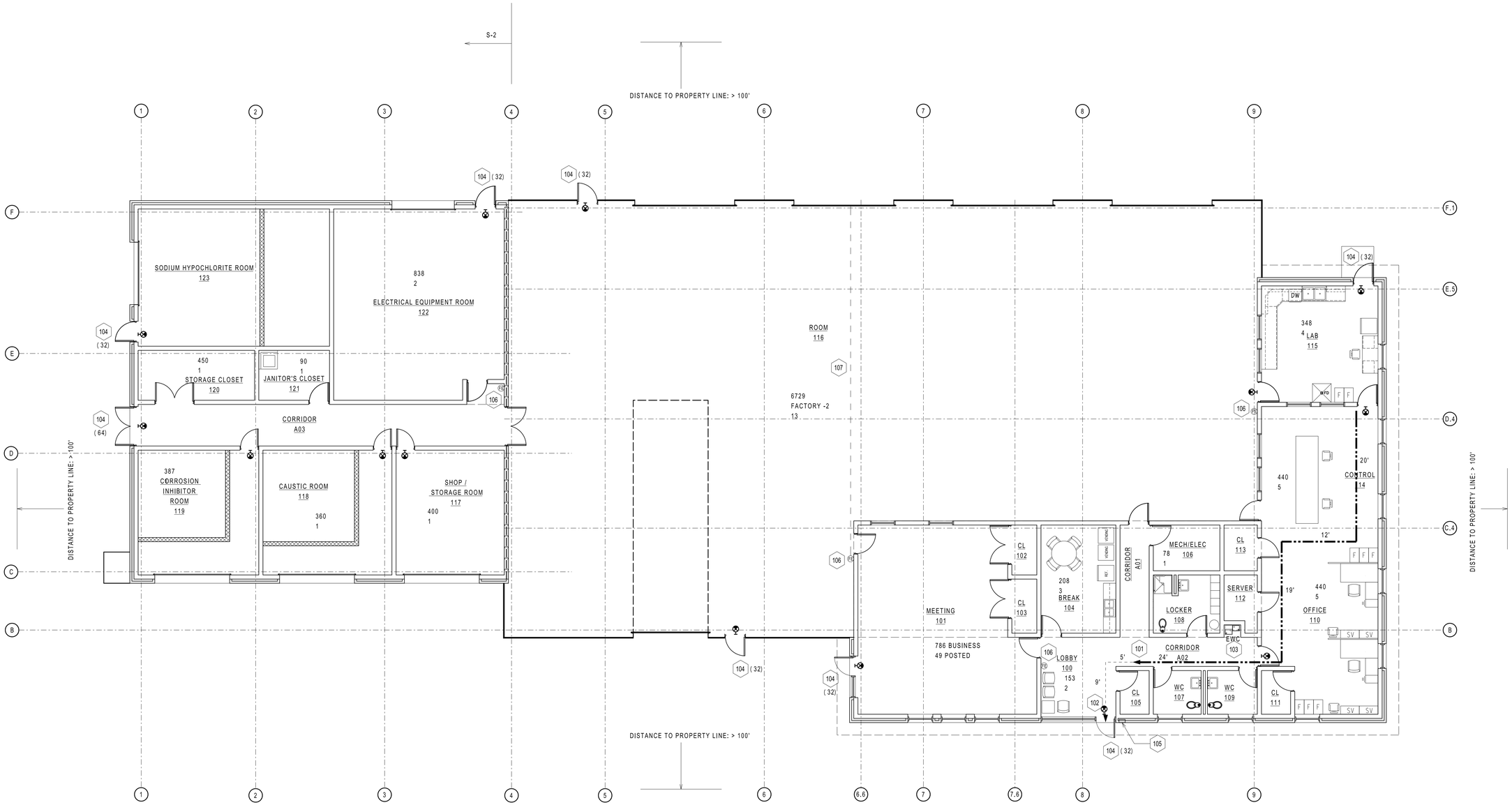

N

1 / G101 LIFE SAFETY PLAN
SCALE: 1/8" = 1'-0"

LIFE SAFETY PLAN KEYED NOTES:

101	COMMON PATH OF TRAVEL: 75'-0"
102	MAXIMUM TRAVEL: 93'-0"
103	DEAD END CORRIDOR: 17'-4"
104	EXIT WIDTH (INCHES)
105	KNOX BOX
106	4A:60B:C FIRE EXTINGUISHER
107	MAXIMUM DISTANCE TO EXTINGUISHER: 56'

REVISIONS

THE WOOTEN COMPANY
120 North Boylan Avenue Raleigh, NC 27603-1423
919.828.0531 fax: 919.834.3589
License Number: F-0113

BRUNSWICK REGIONAL WATER AND SEWER H2GO
BRUNSWICK COUNTY NORTH CAROLINA
CONTRACT No. 4
REVERSE OSMOSIS WATER TREATMENT PLANT
LIFE SAFETY PLAN

RUSSELL D. PEARLMAN
REGISTERED ARCHITECT
6895
NORTH CAROLINA
RALEIGH, NC

DESIGNED BY:	RDP
DRAWN BY:	RTP
CHECKED BY:	RDP
PROJECT NO.:	3081-AB
DATE:	JUNE 7, 2020
SCALE:	AS NOTED

SHEET 4 OF 181

X-004

X004

pdf2013.pltcfg
0:1.0000 ":" / in.
rpowell
6/3/2020 9:34:24 AM
T:\Projects\Brunswick_Regional_W&S_H2GO-3081\AB-Water_Supply&Treatment_Plant\Sheets\WTP\A-Sheets-RO.dgn

Default

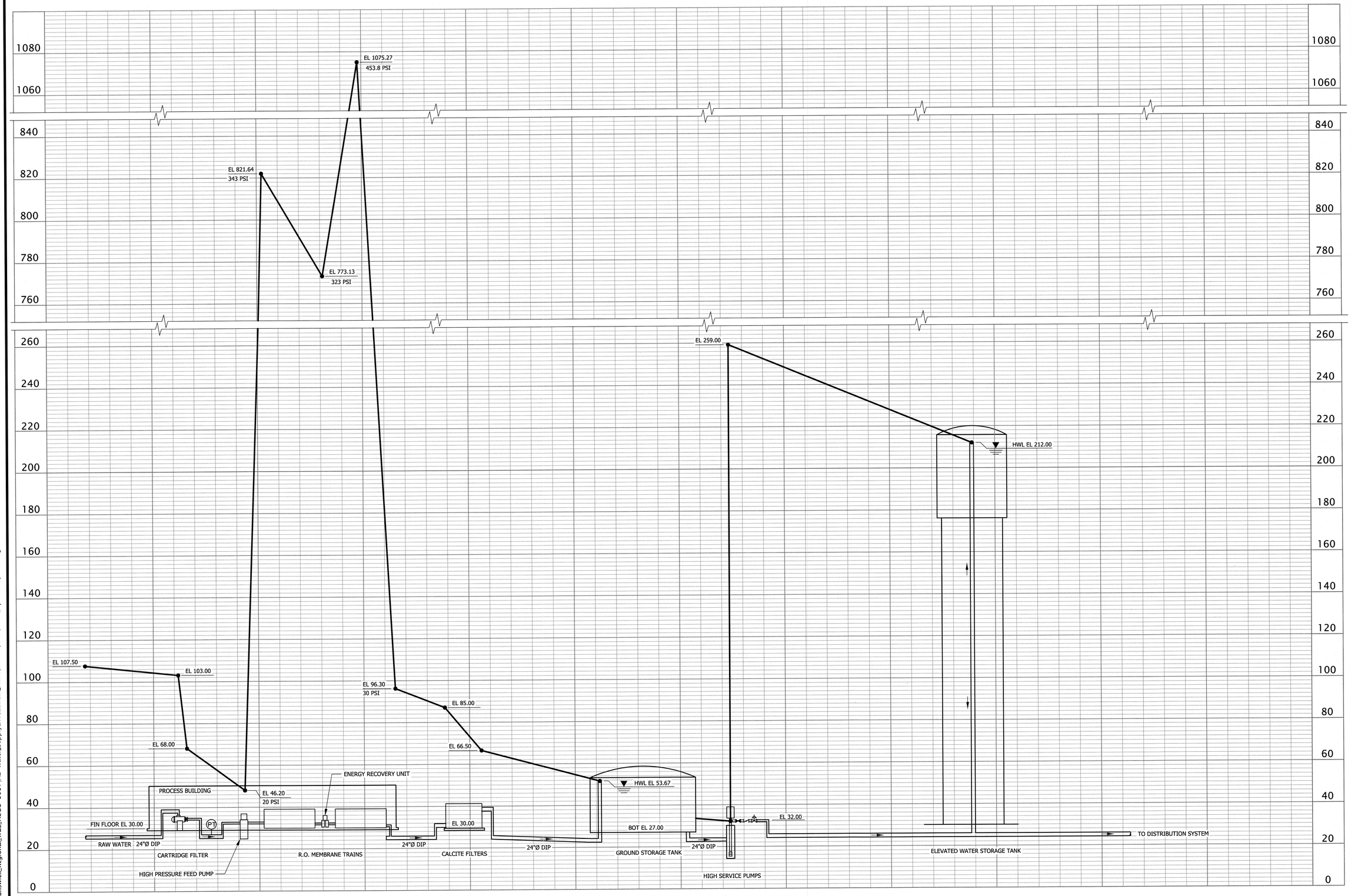

1 G4 HYDRAULIC PROFILE
NOT TO SCALE

REVISIONS

THE WOOTEN COMPANY
120 North Boylan Avenue Raleigh, NC 27603-1423
919.828.0531 FAX 919.828.7389
License Number: F-0113

BRUNSWICK REGIONAL WATER AND SEWER H2GO
BRUNSWICK COUNTY NORTH CAROLINA
CONTRACT No. 4
REVERSE OSMOSIS WATER TREATMENT PLANT
HYDRAULIC PROFILE

NORTH CAROLINA PROFESSIONAL SEAL 040525 ENGINEER CARL W. SCHAFFER
7-JUNE-20

NORTH CAROLINA PROFESSIONAL SEAL 32531 ENGINEER CHARLES W. DAVIS
7-JUNE-20

DESIGNED BY:	CWD
DRAWN BY:	PMD/EML
CHECKED BY:	CWD
PROJECT NO.:	3081-AB
DATE:	JUNE 7, 2020
SCALE:	AS NOTED

SHEET 5 OF 181

X005

Print2PDFx.plt
0.0.0833 "." / in.
pdonaghy
6/4/2020 10:33:23 AM
T:\Projects\Brunswick_Regional_W&S_H2CO-3081\AB-Water_Supply&Treatment_Plant\Sheets\WTP\X005_hydraulic profile.dgn

Default

ABBREVIATIONS

		LP	LIGHT POLE
A	AREA	LT	LEFT
ABAND	ABANDONED	LWL	LOW WATER LEVEL
ABC	AGGREGATE BASE COURSE		
AC	ACRES	MAX	MAXIMUM
A.F.F.	ABOVE FINISHED FLOOR	MECH	MATERIAL
AL	ALUMINUM	MATL	MECHANICAL
APPROX	APPROXIMATE	MFR.	MANUFACTURER
ASPH	ASPHALT	MH	MANHOLE
ASSY	ASSEMBLY	MJ	MECHANICAL JOINT
AVG	AVERAGE	MIN	MINIMUM
ARV	AIR RELEASE VALVE	MON	MONUMENT
AZ	AZIMUTH		
AWWA	AMERICAN WATER WORKS ASSOCIATION	N/A	NOT AVAILABLE
		N	NORTH
B-B	BACK OF CURB TO BACK OF CURB	NAD 83	NORTH AMERICAN DATUM 1983
BLDG	BUILDING	NC	NORMAL CROWN
BM	BENCHMARK	NC GRID	NORTH CAROLINA GRID
BOA	BLOW-OFF ASSEMBLY	NCGS	NORTH CAROLINA GEODETIC SURVEY
BOT	BOTTOM	NO.	NUMBER
BW	BARB WIRE	NTS	NOT TO SCALE
		NOM	NOMINAL
C&G	CURB AND GUTTER	NWL	NORMAL WATER LEVEL
CB	CATCH BASIN		
℄	CENTERLINE	OC	ON CENTER
CIP	CAST IRON PIPE	OD	OUTSIDE DIAMETER
CI	CURB INLET	O/H	OVERHEAD
CLR	CLEARANCE	ORIG	ORIGINAL
CM	CONCRETE MONUMENT		
CMP	CORRUGATED METAL PIPE	PC	POINT OF CURVATURE
CMU	CONCRETE MASONARY UNIT	PED	PEDESTAL
CO	CLEAN OUT	PE	PLAIN END
CONC	CONCRETE	PEF	PLANT EFFLUENT
CONT	CONTINUOUS	PI	POINT OF INTERSECTION
CONSTR	CONSTRUCTION	PIV	POST INDICATOR VALVE
CONTR	CONTRACTOR	PL	PROPERTY LINE
COR	CORNER	PP	POWER POLE
CPP	CORRUGATED PLASTIC PIPE	PRV	PRESSURE REDUCING VALVE
CP&L	CAROLINA POWER AND LIGHT	PSI	POUNDS PER SQUARE INCH
CULV	CULVERT	PVC	POLYVINYL CHLORIDE
		PT	POINT OR POINT OF TANGENCY
D	DEPTH	PVMT	PAVEMENT
DI	DROP INLET		
DIA	DIAMETER	R	RADIUS
DIP	DUCTILE IRON PIPE	R/W	RIGHT OF WAY
DIM	DIMENSION	RCP	REINFORCED CONCRETE PIPE
DISCH	DISCHARGE	REF	REFERENCE
DIST	DISTANCE	REQ'D	REQUIRED
DOT	DEPARTMENT OF TRANSPORTATION	RET	RETAINING
DW	DOMESTIC WATER	REV	REVISED
△	DELTA	RPZ	REDUCED PRESSURE ZONE
		RPM	REVOLUTIONS PER MINUTE
E	EAST	REINF	REINFORCED
EA	EACH	RT	RIGHT
EFF	EFFLUENT		
EIP	EXISTING IRON PIPE	S/W	SIDEWALK
EL	ELEVATION	SAN	SANITARY
ELEC	ELECTRIC	SCH	SCHEDULE
EP	EDGE OF PAVEMENT	SDMH	STORM DRAINAGE MANHOLE
EW	EACH WAY	SF	SILT FENCE
EX	EXISTING	SHT	SHEET
EXP.JT.	EXPANSION JOINT	S	SOUTH
		SPECS	SPECIFICATIONS
F.F.E.	FINISHED FLOOR ELEVATION	SQ	SQUARE
FG	FINISHED GRADE	SS	STAINLESS STEEL
FH	FIRE HYDRANT	ST	STREET
FIN	FINISH	STA.	STATION
FLG	FLANGE	STD	STANDARD
FM	FORCE MAIN	SYM	SYMBOL
FP	FIRE PROTECTION		
FPS	FEET PER SECOND	T	TANGENT
FT	FEET	TBM	TEMPORARY BENCH MARK
FTG	FOOTING	TCP	TERRA COTTA PIPE
		TDD	TEMPORARY DIVERSION DITCH
G	GAS	TEL	TELEPHONE
GA	GAGE	TEL PED	TELEPHONE PEDESTAL
GALV	GALVANIZED	TEMP	TEMPORARY
GM	GAS METER	THK	THICK
GPM	GALLONS PER MINUTE	TOC	TOP OF CURB
GR	GRADE	TOP	TOP OF SLOPE, TOP OF PIPE
GV	GATE VALVE	TOW	TOP OF WALL
GYP	GYPSUM	TP	TELEPHONE POLE
		TRANS	TRANSFORMER
HCP	HANDICAPPED	TYP	TYPICAL
HT	HEIGHT		
HOR	HORIZONTAL	U/G	UNDERGROUND
HP	HORSE POWER	UNO	UNLESS NOTED OTHERWISE
HWA	HIGH WATER ALARM		
HWL	HIGH WATER LEVEL	VC	VERTICAL CURVE
HYD	HYDRANT	VCP	VITRIFIED CLAY PIPE
		VERT	VERTICAL
ID	INSIDE DIAMETER	VOL	VOLUME
IN	INCH	VPC	VERTICAL POINT OF CURVATURE
IN/HR	INCHES PER HOUR	VPI	VERTICAL POINT OF INTERSECTION
INF	INFLUENT	VPT	VERTICAL POINT OF TANGENCY
INT	INTERSECT		
INV	INVERT	W/	WITH
IPS	IRON PIPE SET	WL	WATER LINE
ISL	ISLAND	WM	WATER METER
		WT	WEIGHT
JB	JUNCTION BOX	WV	WATER VALVE
		WTP	WATER TREATMENT PLANT
KWY	KEYWAY	WWF	WELDED WIRE FABRIC
		WWTP	WASTE WATER TREATMENT PLANT
LF	LINEAR FEET		
L	LENGTH	YI	YARD INLET

NOTES

GENERAL

1. ADHERE TO THE FOLLOWING ITEMS IN THE CONSTRUCTION OF THE UTILITY AND APPURTENANCES UNLESS OTHERWISE NOTED.
2. EXISTING UTILITIES ARE LOCATED ON PLANS APPROXIMATELY. NOTIFY UTILITY LOCATING SERVICE TO MARK LOCATION OF EXISTING UTILITIES AT LEAST 48 HOURS PRIOR TO COMMENCING CONSTRUCTION ACTIVITY. CONTRACTOR RESPONSIBLE FOR VERIFYING EXACT LOCATION OF THESE EXISTING UTILITIES. THE COST TO REPAIR THESE FACILITIES, IF DAMAGED, SHALL BE THE RESPONSIBILITY OF THE CONTRACTOR.
3. CONTRACTOR SHALL PROTECT EXISTING PROPERTY CORNER MARKERS. REPLACE DISTURBED PROPERTY CORNERS BY A PROFESSIONAL LAND SURVEYOR.
4. TEMPORARILY REMOVE MINOR ITEMS AS REQUIRED FOR THE INSTALLATION OF THE UTILITY. MINOR ITEMS SHALL INCLUDE, BUT NOT BE LIMITED TO, EXISTING SIGNS, MAIL BOXES, STORM SEWER PIPES, SHRUBS (UNDER 6 FT IN HEIGHT), AND TREES (UNDER 3 INCH IN DIA.). REINSTALL ITEMS TO THEIR ORIGINAL CONDITION. TREES AND SHRUBS SHALL BE REPLANTED OUTSIDE OF EASEMENT AND RIGHTS-OF-WAY AT A LOCATION AGREED TO BY THE OWNER. INCLUDE COST IN THE PER FOOT COST OF THE UTILITY BEING INSTALLED.
5. THE CONTRACTOR SHALL BE RESPONSIBLE AND LIABLE FOR ANY DAMAGES TO EXISTING UTILITIES, STORM DRAINAGE, HEADWALLS, AND OTHER FACILITIES CAUSED BY THE CONTRACTOR OR RESULTING FROM THE CONTRACTOR'S WORK ASSOCIATED WITH ACCOMPLISHING THE PROJECT. THE CONTRACTOR SHALL CORRECT OR REPLACE THOSE UTILITIES, STORM DRAINAGE, HEADWALLS, AND OTHER FACILITIES DAMAGED OR DESTROYED DURING CONSTRUCTION WHETHER SHOWN ON THE PLANS OR NOT.
6. SUPPORT EXISTING POLES, FENCES, CULVERTS, PAVEMENT, UTILITIES, CURBING AND OTHER STRUCTURES DURING CONSTRUCTION. REPAIR DAMAGED ITEMS TO THEIR ORIGINAL CONDITION AT NO ADDITIONAL COST.
7. CONTRACTOR SHALL VERIFY THE HORIZONTAL AND VERTICAL LOCATION AND SIZE OF EXISTING UTILITIES A MINIMUM OF 300 FT. IN ADVANCE OF LAYING ACTIVITIES. NOTIFY THE ENGINEER IMMEDIATELY IF A POTENTIAL CONFLICT ARISES BETWEEN THE EXISTING AND PROPOSED UTILITIES.
8. ALL BURIED VALVES SHALL INCLUDE VALVE BOX AND CONCRETE COLLAR.
9. PROVIDE CONCRETE THRUST BLOCKS AT FITTING LOCATIONS.

EROSION CONTROL

1. INSTALL SILT FENCE OVER & AROUND TOP OF EXISTING STORM DRAINAGE INLETS & PIPES IN AND ADJACENT TO DISTURBED AREAS.
2. INSTALL SILT FENCE AROUND SPOIL PILES.
3. PROVIDE EROSION CONTROL MEASURES AROUND STOCK / WASTE PILES AND STAGING AREAS AS DIRECTED BY ENGINEER.
4. PROTECT STORM PIPE INLETS FROM SEDIMENT RUNOFF FROM LAND DISTURBING ACTIVITIES WITH SILT FENCE, STONE CHECK DAM, OR ARC FILTER AS APPROPRIATE FOR SITE CONDITIONS.
5. REPLACE DISTURBED STORM PIPE OUTLET PROTECTION WITH EQUAL OR GREATER AMOUNT OF RIP-RAP WITHIN 15 DAYS OF DISTURBANCE.
6. WHERE AREA AROUND OUTLET IS DISTURBED AND NO OUTLET PROTECTION EXISTS, CLASS "1" RIP-RAP SHALL BE PLACED AROUND PIPE OUTLET AS DIRECTED BY ENGINEER.
7. PROVIDE EROSION CONTROL MATTING IN DITCHES AND SWALES AS DIRECTED BY ENGINEER.

EROSION CONTROL CONSTRUCTION SEQUENCE

1. OBTAIN AND POST COPY OF CERTIFICATE OF EROSION CONTROL PLAN APPROVAL.
2. CLEAR SITE ONLY AS NECESSARY TO INSTALL EROSION CONTROL DEVICES AS INDICATED ON THE DRAWINGS. INSTALL TEMPORARY EROSION CONTROL DEVICES AS SHOWN ON PLANS.
3. NOTIFY ENGINEER AND NCDENR, LAND QUALITY SECTION AT (252) 946-6481 FOR SITE INSPECTION PRIOR TO COMMENCING MAIN CONSTRUCTION OPERATIONS.
4. ONCE EROSION CONTROL DEVICES ARE APPROVED, BEGIN CONSTRUCTION OPERATIONS.
5. MAINTAIN EROSION CONTROL DEVICES AS NECESSARY DURING INSTALLATION OF PROJECT IMPROVEMENTS, INSPECT DEVICES AFTER EVERY RAINFALL EVENT AND CLEANOUT TRAPS AND/OR CHECK DAMS WHEN HALF FULL.
6. AS CONSTRUCTION PROGRESSES, INSTALL ADDITIONAL EROSION CONTROL DEVICES AS INDICATED ON THE DRAWINGS, CALLED FOR IN SPECIFICATIONS, OR AS DIRECTED BY ENGINEER.
7. ESTABLISH GROUND COVER (TEMPORARY OR PERMANENT) ON EXPOSED SLOPES STEEPER THAN 3:1 WITHIN 7 CALENDAR DAYS FOLLOWING COMPLETION OF ANY PHASE OF GRADING. ESTABLISH A PERMANENT GROUNDCOVER FOR ALL OTHER DISTURBED AREAS WITHIN 14 CALENDAR DAYS FROM THE LAST LAND DISTURBING ACTIVITY.
8. AFTER SITE IS STABILIZED, REQUEST AN INSPECTION BY NCDENR-LAND QUALITY SECTION. UPON APPROVAL OF SITE STABILIZATION, REMOVE TEMPORARY EROSION CONTROL DEVICES, DRESS OUT AREA AND SEED AND MULCH. PERMANENT EROSION CONTROL DEVICES SHALL BE INSTALLED AND APPROVED BY ENGINEER.

LEGEND

SURVEY

EXISTING		NEW
BM	BENCHMARK	
TBM	TEMPORARY BENCHMARK	
Conc Mon	CONCRETE MONUMENT	
EIP	IRON PIPE	●
HT	HUB & TACK	■
NLS	NAIL	●
NCS	NAIL & CAP	●
PK	PK NAIL	●
	GEOTECHNICAL BORE	
	CONIFEROUS TREE	
	DECIDUOUS TREE	
SHB	SHRUB	
	TREE TO BE REMOVED	
	LANDSCAPING / HEDGE	
	TREELINE / WOODLINE	
	PROPERTY LINE	
	RIGHT-OF-WAY	
	EXISTING UTILITY EASEMENT	
	TEMPORARY CONSTRUCTION EASEMENT	
	PERMANENT UTILITY EASEMENT	

FONT STYLES

CAPITALIZED TEXT DENOTES PROPOSED FEATURES

Light Italicized Text Denotes Existing Features

WATER

EXISTING		NEW
WV	WATER VALVE	
FH	FIRE HYDRANT	
	REDUCER/INCREASER	
ARV	AIR RELEASE	
BO	BLOW OFF	
WM	WATER METER	
	PLUG	
W	WATER LINE	12" WL
ICV	IRRIGATION CONTROL VALVE	

EROSION CONTROL

EXISTING		NEW
	DITCH/SWALE	
	STONE CHECK DAM	
	INLET PROTECTION	
	SILT FENCE / TREE PROTECTION	
	SILT FENCE OUTLET	

STORM DRAINAGE

EXISTING		NEW
CB	CATCH BASIN	
DI	DROP INLET	
FES	FLARED END SECTION	
STMH	MANHOLE	

SEWER

EXISTING		NEW
SSMH	MANHOLE	
SSCO	CLEAN OUT	
SPV	SEWER PLUG VALVE	
ARV	AIR RELEASE VALVE (SINGLE)	
	AIR RELEASE VALVE (DUAL)	
SS	SEWER LINE	SS
FM	FORCE MAIN	12" FSS
	CONCENTRATE LINE	16" CSS

UTILITIES

EXISTING		NEW
PP	POWER POLE	
LP	LIGHT POLE	
Guy	GUY WIRE	
C	CABLE TV PEDESTAL	
T	TELEPHONE PEDESTAL	
TS	TRAFFIC SIGNAL BOX	
EB	ELECTRICAL BOX	
	WARNING POST	
FOC	FIBER OPTIC CABLE BOX	
G	GAS LINE	
G	GAS LINE VALVE	
E	ELECTRIC CABLE	
T	TELEPHONE CABLE	
FOC	FIBER OPTIC CABLE	
P	OVERHEAD POWER LINE	

REVISIONS

THE WOOTEN COMPANY
120 North Boylan Avenue Raleigh, NC 27603-1423
919.828.0531 Fax 919.834.3589
License Number: F-0115

BRUNSWICK REGIONAL WATER AND SEWER H2GO
BRUNSWICK COUNTY NORTH CAROLINA
CONTRACT No 4
REVERSE OSMOSIS WATER TREATMENT PLANT
ABBREVIATIONS, LEGEND, & NOTES

NORTH CAROLINA PROFESSIONAL SEAL 040525 ENGINEER CHARLES W. DAVIS SCHNEIDER
7-June-20

NORTH CAROLINA PROFESSIONAL SEAL 32531 ENGINEER CHARLES W. DAVIS
7-June-20

DESIGNED BY: CWD
DRAWN BY: PMD/EML
CHECKED BY: CWD
PROJECT NO.: 3081-AB
DATE: JUNE 7, 2020
SCALE: AS NOTED

SHEET 6 OF 181

X006

Print2PDFx.plt
600\0 sf si / in.
pdonaghy
6/4/2020 10:34:57 AM
T:\Projects\Brunswick_Regional_W&S_H2GO-3081\AB-Water_Supply&Treatment_Plant\Sheets\WTP\X006_NOTES.dgn

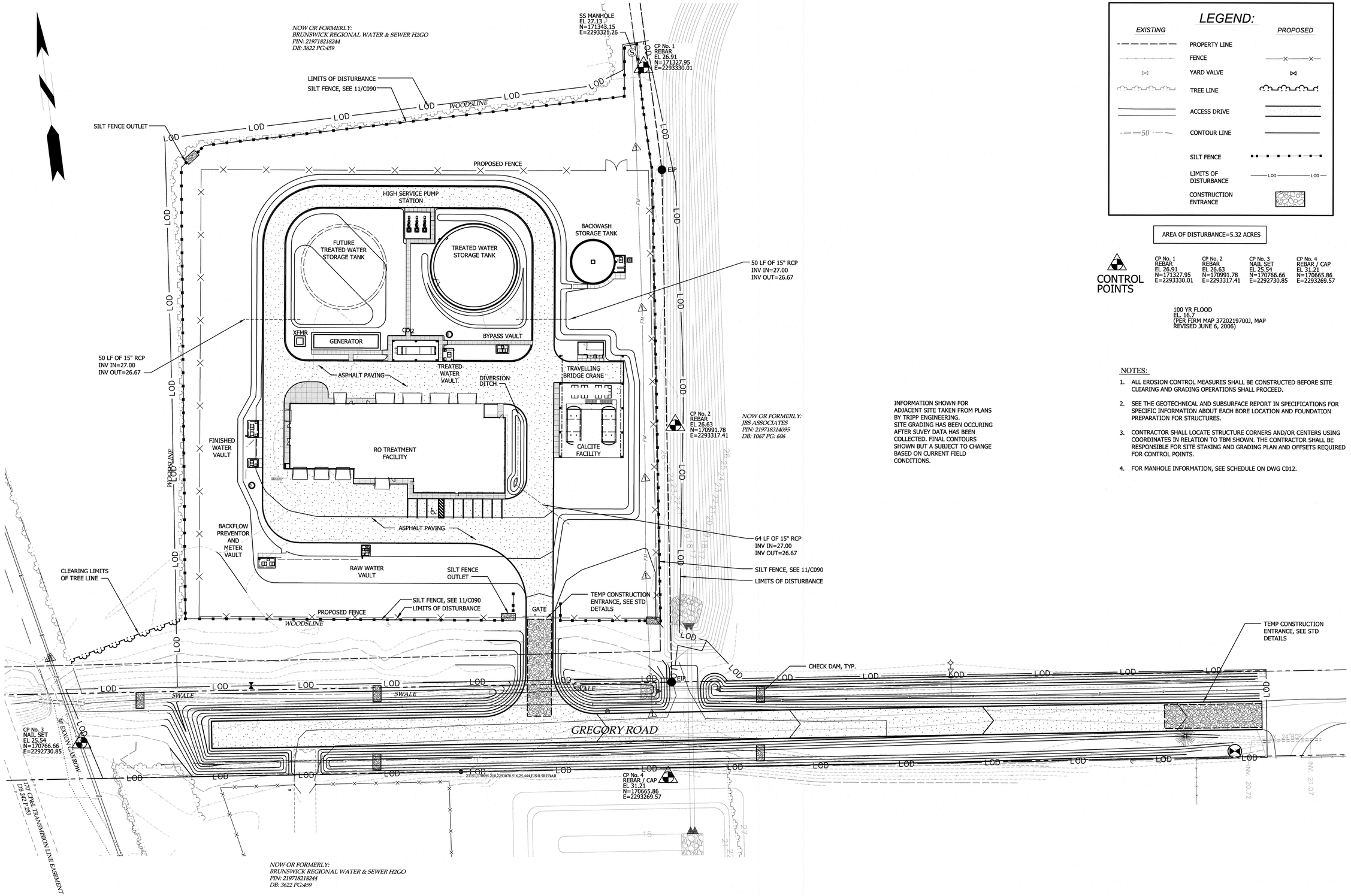

INFORMATION SHOWN FOR ADJACENT SITE TAKEN FROM PLANS BY TRIPP ENGINEERING. SITE GRADING HAS BEEN OCCURING AFTER SUVEY DATA HAS BEEN COLLECTED. FINAL CONTOURS SHOWN BUT A SUBJECT TO CHANGE BASED ON CURRENT FIELD CONDITIONS.

1 EC010 EROSION AND SEDIMENTATION CONTROL SITE PLAN
SCALE: 1" = 40'-0"

1"=40'-0"

40' 20' 0 40'

LEGEND:

EXISTING		PROPOSED
	PROPERTY LINE	
	FENCE	
	YARD VALVE	
	TREE LINE	
	ACCESS DRIVE	
50	CONTOUR LINE	
	SILT FENCE	
	LIMITS OF DISTURBANCE	LOD
	CONSTRUCTION ENTRANCE	

AREA OF DISTURBANCE=5.32 ACRES

CONTROL POINTS

CP No. 1	CP No. 2	CP No. 3	CP No. 4
REBAR	REBAR	NAIL SET	REBAR / CAP
EL 26.91	EL 26.63	EL 25.54	EL 31.21
N=171327.95	N=170991.78	N=170766.66	N=170665.86
E=2293330.01	E=2293317.41	E=2292730.85	E=2293269.57

100 YR FLOOD
EL. 16.7
(PER FIRM MAP 3720219700J, MAP REVISED JUNE 6, 2006)

NOTES:

1. ALL EROSION CONTROL MEASURES SHALL BE CONSTRUCTED BEFORE SITE CLEARING AND GRADING OPERATIONS SHALL PROCEED.
2. SEE THE GEOTECHNICAL AND SUBSURFACE REPORT IN SPECIFICATIONS FOR SPECIFIC INFORMATION ABOUT EACH BORE LOCATION AND FOUNDATION PREPARATION FOR STRUCTURES.
3. CONTRACTOR SHALL LOCATE STRUCTURE CORNERS AND/OR CENTERS USING COORDINATES IN RELATION TO TBM SHOWN. THE CONTRACTOR SHALL BE RESPONSIBLE FOR SITE STAKING AND GRADING PLAN AND OFFSETS REQUIRED FOR CONTROL POINTS.
4. FOR MANHOLE INFORMATION, SEE SCHEDULE ON DWG C012.

REVISIONS

THE WOOTEN COMPANY
120 North Boylan Avenue Raleigh NC 27603-1423
919.828.0531 fax 919.834.3589
License Number: F-0115

BRUNSWICK REGIONAL WATER AND SEWER H2GO
BRUNSWICK COUNTY NORTH CAROLINA

CONTRACT No. 4
REVERSE OSMOSIS WATER TREATMENT PLANT

EROSION AND SEDIMENTATION CONTROL
OVERALL SITE PLAN

NORTH CAROLINA PROFESSIONAL SEAL 22531 ENGINEER CHARLES W. DAVIS
7-JUNE-20

DESIGNED BY:	CWD
DRAWN BY:	PMD/EML
CHECKED BY:	CWD
PROJECT NO.:	3081-AB
DATE:	JUNE 7, 2020
SCALE:	AS NOTED

SHEET 7 OF 181

EC010

Print2PDFx.plt
39.9999 ' / in.
pdonaghy
6/4/2020 11:03:40 AM
T:\Projects\Brunswick_Regional_W&S_H2GO-3081\AB-Water_Supply&Treatment_Plant\Sheets\WTP\EC010-OVERALL_SITE.dgn
Default

Default

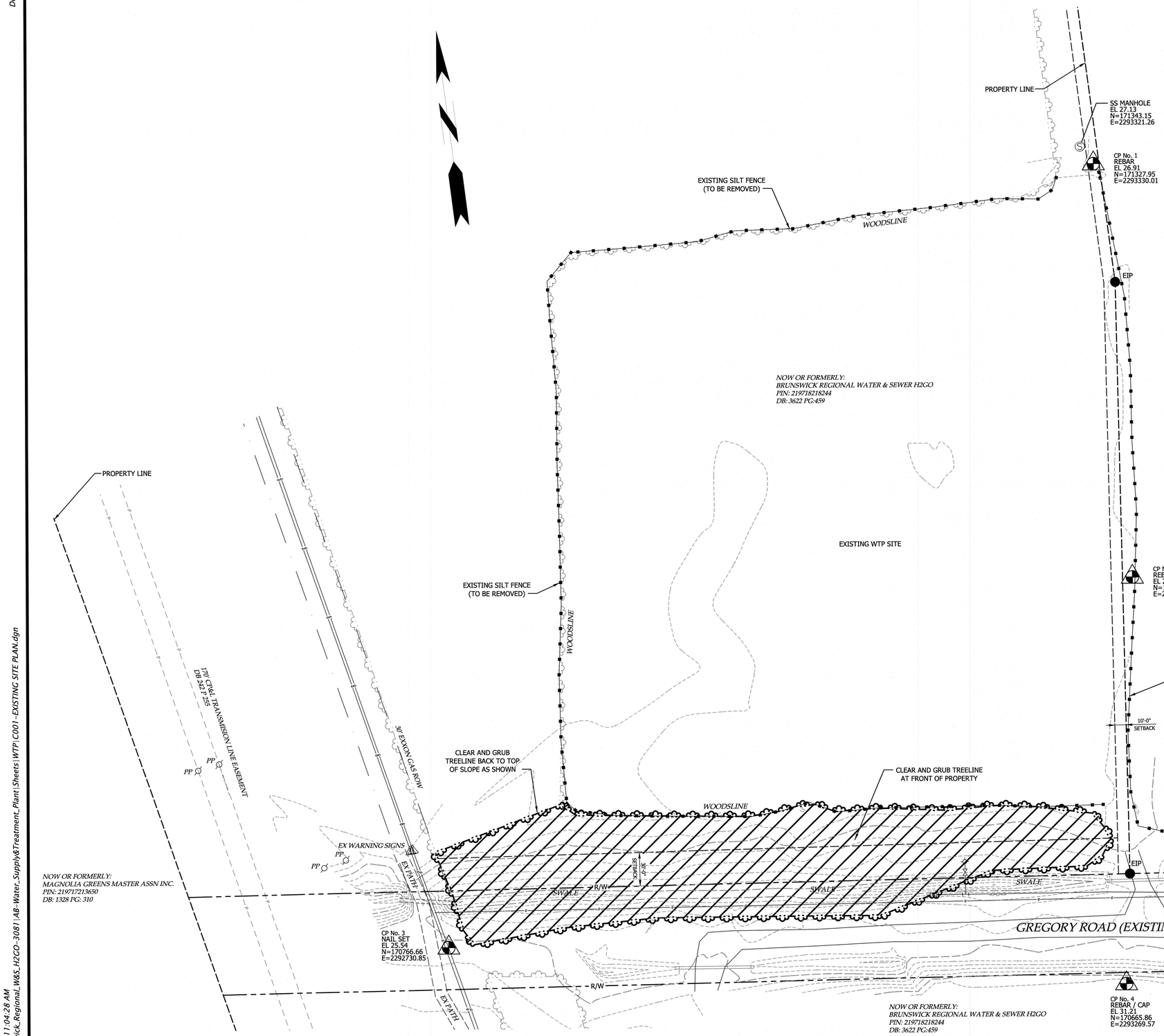

LEGEND:

EXISTING

- PROPERTY LINE
- FENCE
- YARD VALVE
- TREE LINE
- ACCESS DRIVE
- 50 CONTOUR LINE
- SILT FENCE

AREA OF DISTURBANCE=5.32 ACRES

CONTROL POINTS

CP No. 1	CP No. 2	CP No. 3	CP No. 4
REBAR	REBAR	NAIL SET	REBAR / CAP
EL 26.91	EL 26.63	EL 25.54	EL 31.21
N=171327.95	N=170991.78	N=170766.66	N=170665.86
E=2293330.01	E=2293317.41	E=2292730.85	E=2293269.57

100 YR FLOOD
EL. 16.7
(PER FIRM MAP 37202197000J, MAP REVISED JUNE 6, 2006)

NOTES:

1. ALL EROSION CONTROL MEASURES SHALL BE CONSTRUCTED BEFORE SITE CLEARING AND GRADING OPERATIONS SHALL PROCEED. EXISTING SILT FENCE INSTALLED IN 2017 SHALL BE COMPLETELY REMOVED AND NEW SILT FENCE SHALL BE INSTALLED AS SHOWN ON DRAWING EC010.

1 C001 EXISTING SITE PLAN
SCALE: 1" = 40'-0"

1"=40'-0"

40' 20' 0 40'

REVISIONS

THE WOOTEN COMPANY
120 North Boylan Avenue Raleigh, NC 27603-1423
919.833.8091 FAX 919.834.5639
License Number: F-0115

BRUNSWICK REGIONAL WATER AND SEWER H2GO
BRUNSWICK COUNTY NORTH CAROLINA
CONTRACT No. 4
REVERSE OSMOSIS WATER TREATMENT PLANT
EXISTING SITE PLAN

NORTH CAROLINA PROFESSIONAL SEAL 22531 ENGINEER CHARLES W. DAVIS
7-JUNE-20

DESIGNED BY:	CWD
DRAWN BY:	PMD/EML
CHECKED BY:	CWD
PROJECT NO.:	3081-AB
DATE:	JUNE 7, 2020
SCALE:	AS NOTED

SHEET 8 OF 181

C001

Print2PDFx.plt
39.9999 ' / in.
pdonaghy
6/4/2020 11:04:28 AM
T:\Projects\Brunswick_Regional_W&S_H2GO-3081\AB-Water_Supply&Treatment_Plant\Sheets\WTP\C001-EXISTING SITE PLAN.dgn

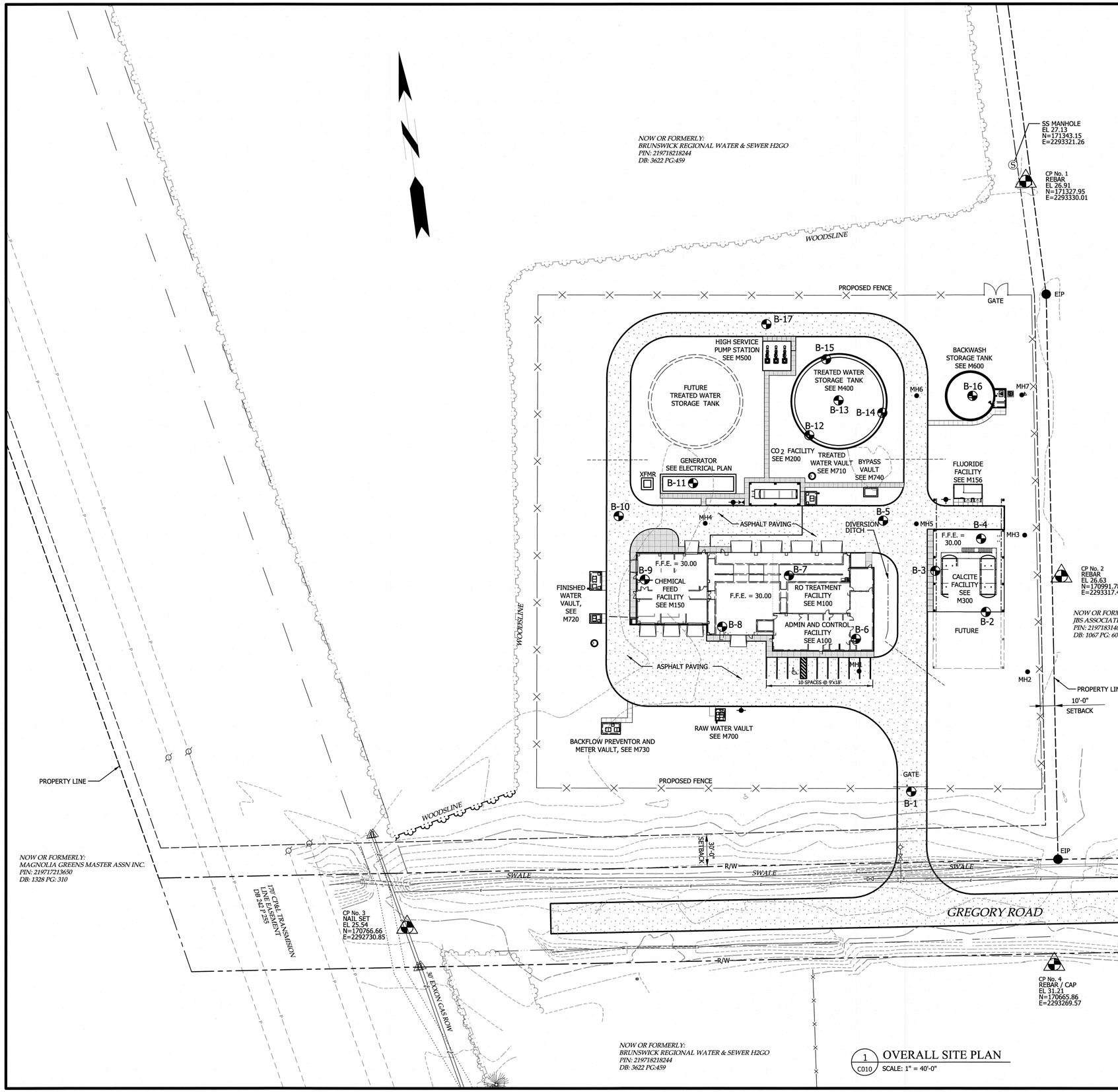

LEGEND:

EXISTING		PROPOSED
- - - - - -	PROPERTY LINE	
——×——×——	FENCE	——×——×——
⋈	YARD VALVE	⋈
	TREE LINE	
	ACCESS DRIVE	
—50—	CONTOUR LINE	
	BORE LOCATION	B-1
	SILT FENCE	
	LIMITS OF DISTURBANCE	LOD LOD

AREA OF DISTURBANCE=5.32 ACRES

CONTROL POINTS

CP No. 1	CP No. 2	CP No. 3	CP No. 4
REBAR	REBAR	NAIL SET	REBAR / CAP
EL 26.91	EL 26.63	EL 25.54	EL 31.21
N=171327.95	N=170991.78	N=170766.66	N=170665.86
E=2293330.01	E=2293317.41	E=2292730.85	E=2293269.57

100 YR FLOOD
EL. 16.7
(PER FIRM MAP 3720219700J, MAP REVISED JUNE 6, 2006)

NOTES:

1. ALL EROSION CONTROL MEASURES SHALL BE CONSTRUCTED BEFORE SITE CLEARING AND GRADING OPERATIONS SHALL PROCEED.
2. SEE THE GEOTECHNICAL AND SUBSURFACE REPORT IN SPECIFICATIONS FOR SPECIFIC INFORMATION ABOUT EACH BORE LOCATION AND FOUNDATION PREPARATION FOR STRUCTURES.
3. CONTRACTOR SHALL LOCATE STRUCTURE CORNERS AND/OR CENTERS USING COORDINATES IN RELATION TO TBM SHOWN. THE CONTRACTOR SHALL BE RESPONSIBLE FOR SITE STAKING AND GRADING PLAN AND OFFSETS REQUIRED FOR CONTROL POINTS.
4. FOR MANHOLE INFORMATION, SEE SCHEDULE ON DWG C012.

1 C010 OVERALL SITE PLAN
SCALE: 1" = 40'-0"

1"=40'-0" 40' 20' 0 40'

REVISIONS

THE WOOTEN COMPANY
120 North Boylan Avenue Raleigh NC 27603-1423
919.828.0531 fax 919.834.3589
License Number: F-0115

BRUNSWICK REGIONAL WATER AND SEWER H2GO
BRUNSWICK COUNTY NORTH CAROLINA
CONTRACT No. 4
REVERSE OSMOSIS WATER TREATMENT PLANT
OVERALL SITE PLAN AND SURVEY CONTROL POINTS

NORTH CAROLINA PROFESSIONAL SEAL 12531 ENGINEER CHARLES W. DAVIS
7-June-20

DESIGNED BY:	CWD
DRAWN BY:	PMD/EML
CHECKED BY:	CWD
PROJECT NO.:	3081-AB
DATE:	JUNE 7, 2020
SCALE:	AS NOTED

SHEET 9 OF 181

C010

Default
Print2PDFx.plt
39.9999 * / in.
pdonaghy
6/4/2020 11:54:38 AM
T:\Projects\Brunswick_Regional_W&S_H2GO-3081\AB-Water_Supply&Treatment_Plant\Sheets\WTP\C010-OVERALL_SITE.dgn

Default

SS MANHOLE
EL 27.13
N=171343.15
E=2293321.26

CP No. 1
REBAR
EL 26.91
N=171327.95
E=2293330.01

6' CHAIN LINK FENCE, SEE 2/C092
SILT FENCE, SEE 11/C090
LIMITS OF DISTURBANCE
SILT FENCE OUTLET
20' DOUBLE SWING GATE, SEE DET. 2/C092
WOODSLINE
LOD
EIP

FOR ROAD AND SIDEWALK ELEVATIONS SEE DWG C014

HIGH SERVICE PUMP STATION
FUTURE TREATED WATER STORAGE TANK
TREATED WATER STORAGE TANK
BACKWASH STORAGE TANK
50 LF OF 15" RCP
INV IN=27.00
INV OUT=26.67
XFMR
GENERATOR
CO 2
TREATED WATER VAULT
FLUORIDE FACILITY
CHEMICAL FEED FACILITY
FINISHED WATER VAULT
F.F.E. = 30.00
RO TREATMENT FACILITY
ADMIN AND CONTROL FACILITY
CALCITE FACILITY
BACKFLOW PREVENTOR VAULT
RAW WATER VAULT
MH#1
MH#2
MH#3
MH#4
MH#5
MH#6
MH#7

BOLLARDS EACH SIDE OF DOOR, INSIDE AND OUT (4 TOTAL), SEE DETAIL 1/C092

64 LF OF 15" RCP
INV IN=27.00
INV OUT=26.67

25' CANTILEVER GATE, SEE DET. 5/C091 AND SEE NOTE 5

SITE ADDRESS NUMBER PLACED ON ACCESS DRIVE, SEE NOTE 6

NEW 36" RCP

EX 6" WATER LINE TO BE RELOCATED, SEE DWG C012

EX 30" RCP

EX GRAVEL DRIVE

EX FIRE HYDRANT

CP No. 2
REBAR
EL 26.63
N=170991.78
E=2293317.41

PROPERTY LINE

BOLLARDS AT END OF DRIVE (3 TOTAL, EQUALLY SPACED), SEE DETAIL 1/C092

INFORMATION SHOWN FOR ADJACENT SITE TAKEN FROM PLANS BY TRIPP ENGINEERING. SITE GRADING HAS OCCURED AFTER SURVEY DATA WAS COLLECTED. FINAL CONTOURS SHOWN ARE SUBJECT TO BE DIFFERENT THAN CONTOURS OF CURRENT FIELD CONDITIONS.

FOR ROAD WORK AND GRADING, SEE DWG C020

GREGORY ROAD

SETBACK LINE

SWALE

R/W

LEGEND:

EXISTING		PROPOSED
	PROPERTY LINE	
	FENCE	
	YARD VALVE	
	TREE LINE	
	ACCESS DRIVE	
50	CONTOUR LINE	
	SILT FENCE	
	LIMITS OF DISTURBANCE	LOD — LOD

AREA OF DISTURBANCE=5.32 ACRES

CONTROL POINTS

CP No. 1	CP No. 2
REBAR	REBAR
EL 26.91	EL 26.63
N=171327.95	N=170991.78
E=2293330.01	E=2293317.41

100 YR FLOOD
EL. 16.7
(PER FIRM MAP 37202197000J, MAP REVISED JUNE 6, 2006)

NOTES:

1. ALL EROSION CONTROL MEASURES SHALL BE CONSTRUCTED BEFORE SITE CLEARING AND GRADING OPERATIONS SHALL PROCEED.
2. SEE THE GEOTECHNICAL AND SUBSURFACE REPORT IN SPECIFICATIONS FOR SPECIFIC INFORMATION ABOUT EACH BORE LOCATION AND FOUNDATION PREPARATION FOR STRUCTURES.
3. CONTRACTOR SHALL LOCATE STRUCTURE CORNERS AND/OR CENTERS USING COORDINATES IN RELATION TO TBM SHOWN. THE CONTRACTOR SHALL BE RESPONSIBLE FOR SITE STAKING AND GRADING PLAN AND OFFSETS REQUIRED FOR CONTROL POINTS.
4. FOR MANHOLE INFORMATION, SEE SCHEDULE ON DWG C012.
5. ELECTRIC GATE SHALL BE EQUIPPED WITH SIREN OPERATED PER [F]503.6 OF THE 2012 NC FIRE PREVENTION CODE.
6. PROVIDE SITE ADDRESS NUMBERS A MINIMUM OF 4"x1/2" IN STROKE WIDTH IN A CONTRASTING COLOR ON THE ASPHALT PAVEMENT ACCESS DRIVE PER [F]505.1 OF THE 2012 NC FIRE PREVENTION CODE.

REVISIONS

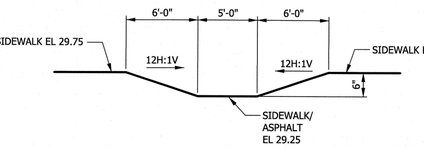

A C011 SECTION - CURB RAMP
NO SCALE

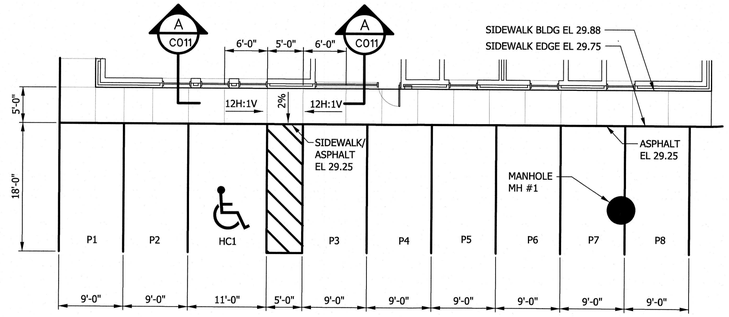

2 C011 PARTIAL PLAN - PARKING AREA
SCALE: 1" = 10'-0"

1 C011 OVERALL GRADING PLAN
SCALE: 1" = 30'-0"

1"=10'-0" 10 5 0 10'
1"=30'-0" 30' 15' 0 30'

THE WOOTEN COMPANY
120 North Boylan Avenue Raleigh, NC 27603-1423
919.828.0531 Fax 919.834.3589
License Number: F-1015

BRUNSWICK REGIONAL WATER AND SEWER H2GO
BRUNSWICK COUNTY NORTH CAROLINA
CONTRACT No. 4
REVERSE OSMOSIS WATER TREATMENT PLANT
SITE GRADING PLAN

NORTH CAROLINA PROFESSIONAL ENGINEER SEAL 25531 CHARLES W. DAVIS
7-JUNE-20

DESIGNED BY:	CWD
DRAWN BY:	PMD/EML
CHECKED BY:	CWD
PROJECT NO.:	3081-AB
DATE:	JUNE 7, 2020
SCALE:	AS NOTED

SHEET 10 OF 181

C011

Print2PDFx.plt
29.9999 ' / in.
pdonaghy
6/4/2020 11:56:14 AM
T:\Projects\Brunswick_Regional_W&S_H2CO-3081\AB-Water_Supply&Treatment_Plant\Sheets\WTP\C011-OVERALL_GRADING.dgn

Default

SS MANHOLE
EL 27.13
N=171343.15
E=2293321.26

CP No. 1
REBAR
EL 26.91
N=171327.95
E=2293330.01

GATE

24" DIA 45° BEND (MJ W/RESTRAINT) ,TYP

HIGH SERVICE PUMP STATION

FUTURE TREATED WATER STORAGE TANK

TREATED WATER STORAGE TANK

6" DIA DUAL WALL CORRUGATED HDPE PIPE SLOPED AT 0.5%

6" DIA DUAL WALL CORRUGATED HDPE PIPE SLOPED AT 0.5%

TREATED WATER VAULT

BACKWASH STORAGE TANK

15" STORM DRAIN

15" STORM DRAIN
10x4" WYE

XFMR

GENERATOR

CO2 FACILITY

BYPASS VAULT

SEE PARTIAL PLAN 1/C013 FOR PIPING IN AREA

2" GATE VALVE

2" G.V.

ROOF DRAINS, SEE DWG C015

MH 1

MH 2

MH 3

MH 4

MH 5

MH 6

MH 7

CHEMICAL FEED FACILITY

RO TREATMENT FACILITY
F.F.E. = 30.00

CALCITE FACILITY

2" INV 26.50
24" INV 24.00

12" P.V.

CP No. 2
REBAR
EL 26.63
N=170991.78
E=2293317.41

PROPERTY LINE

FINISHED WATER VAULT

RISE FROM INV 25.25 TO INV 26.83

16" INV 23.25
15" INV 26.92

15" STORM DRAIN

10" INV 25.25
15" INV 26.83

ROOF DRAINS, SEE DWG C015

10'-0" SETBACK

RAW WATER VAULT

FIRE HYDRANT

YARD HYDRANT

2" GATE VALVE

BACKFLOW PREVENTER VAULT

10" INV 25.25
24" INV 22.75

2" TAP
2" GATE VALVE
10"x6" TEE (MJ)

2" TAPS

16" INV 23.25
10" INV 25.25

INSTALL THRUST COLLAR PER DETAIL 7/C091

YARD HYDRANT

ROUTE NEW 16" CONCENTRATE LINE UNDER NEW 6" WATER MAIN

PROVIDE 24"x6" REDUCING TEE (MJ W/TB) AND CONNECT TO NEW 6" WATER LINE

24" DIA C-900 FINISHED WATER LINE

24" DIA C-900 RAW WATER LINE

156' RJ PIPE

90' RJ PIPE

77' RJ PIPE

RELOCATE EXISTING 6" VALVE

ROUTE 24" RAW WATER LINE UNDER NEW 6" WATER MAIN

NEW 6" C900 WATER LINE (3'-0" MIN COVER), SEE PIPE PROFILE 8/C021

5'-0"

42' RJ PIPE

CONNECT AT VALVE FOR WTP CONTRACT, SEE PIPE PROFILE 7/C021

CONNECT AT VALVE FOR WTP CONTRACT, SEE PIPE PROFILE 5/C021

CONNECT AT VALVE FOR WTP CONTRACT, SEE PIPE PROFILE 6/C021

SETBACK

30'-0"

R/W

RELOCATE FIRE HYDRANT, VALVE AND TEE

TWO NEW 6" DIA 45° BENDS (MJ)

CUT EX 6" WATER MAIN (APPROX 5' DEPTH) AND INSTALL TWO NEW 6" DIA 45° BENDS (MJ) AND ROUTE AS SHOWN TO 5' INSIDE THE PROPERTY SETBACK, (3'-0" MIN COVER)

REMOVE EX 6" WATER MAIN, RELOCATE HYDRANT, VALVES AND TEE AS SHOWN

EX 30" RCP

NEW 36" RCP

EX 6" WATER MAIN

EX FIRE HYDRANT

EX 6" WATER MAIN

24" FINISHED WATER LINE (BY OTHERS)

24" RAW

24" RAW WATER LINE (BY OTHERS)

16" CSS

16" CONCENTRATE LINE (BY OTHERS)

GREGORY ROAD

16" CSS

R/W

80'-0"

NOTES:

1. ALL INFORMATION COLLECTED THROUGH SURVEYED DATA. CONTRACTOR SHALL FIELD VERIFY ALL DIMENSIONS.
2. SEE THE GEOTECHNICAL AND SUBSURFACE REPORT IN SPECIFICATIONS FOR SPECIFIC INFORMATION ABOUT EACH BORE LOCATION AND FOUNDATION PREPARATION FOR STRUCTURES.
3. FOR MANHOLE INFORMATION, SEE SCHEDULE ON DWG C012.
4. SEE DETAIL 1/C094 FOR TYPICAL PIPING CROSSING DETAIL.
5. SEE DETAILS 3/C094, 7/C094 AND 8/C094 FOR TYPICAL PIPE BEDDING AND PARALLEL PIPES IN COMMON TRENCH.
6. ALL BURIED PIPE FITTINGS SHALL BE (MJ) MECHANICAL JOINT TYPE WITH THRUST BLOCKING PER DETAIL 4/C094, UNLESS NOTED OTHERWISE.

CONTROL POINTS

	CP No. 1	CP No. 2
	REBAR	REBAR
	EL 26.91	EL 26.63
	N=171327.95	N=170991.78
	E=2293330.01	E=2293317.41

100 YR FLOOD
EL 16.7
(PER FIRM MAP 3720219700J, MAP REVISED JUNE 6, 2006)

LEGEND:

EXISTING		PROPOSED
	PROPERTY LINE	
	FENCE	
	YARD VALVE	
	TREE LINE	
	ACCESS DRIVE	
50	CONTOUR LINE	
	SILT FENCE	
	LIMITS OF DISTURBANCE	LOD LOD

PIPE SCHEDULE

LINE No.	PIPE DIA.	TYPE	INV IN	INV OUT	FROM	TO	COMMENTS
1	24"	C900	22.75	23.33	RAW WATER METER VAULT	CARTRIDGE FILTERS	S.S. INSIDE BLDG
2	24"	C900	24.00	24.67	PERMEATE LINE FROM BLDG	CALCITE CONTACTOR INFLUENT	COATED FITTINGS, RJ PIPE
3	24"	C900	24.67	22.33	CALCITE CONTACTOR EFFLUENT	TREATED WATER VAULT	RJ PIPE (RESTRAINED JOINT)
4	24"	C900	22.33	22.00	TREATED WATER VAULT	TREATED WATER STORAGE TANK	
5	24"	C900	21.50	21.50	TREATED WATER STORAGE TANK	HIGH SERVICE PUMP STATION	
6	24"	C900	20.25	22.33	HIGH SERVICE PUMP STATION	SYSTEM WATER VAULT	
7	24"	C900	22.33	12.80	FINISHED WATER VAULT	CONNECTION VALVE AT CONTRACT END	SEE PROFILE 7/C021
8	16"	C900	23.33	11.70	CONCENTRATE LINE FROM BLDG	CONNECTION VALVE AT CONTRACT END	SEE PROFILE 6/C021
9	12"	C900	23.50	22.50	LINE 8 CONNECTION	BYPASS VAULT	
10	12"	C900	23.50	22.50	WATER STORAGE TANK	BYPASS VAULT	TANK DRAIN
11	12"	C900	26.67	23.96	CALCITE RINSE WATER WASTE LINE	BACKWASH STORAGE FACILITY	
12	3/4"	304 SS			CO2 FACILITY (GAS LINE)	CO2 FEED PANEL	WRAP PIPE IN SOIL
13	12"	PVC	24.25	24.40	BACKWASH STORAGE FACILITY	MANHOLE No 6	
14	12"	PVC	24.50	25.00	MANHOLE No 6	MANHOLE No 5	
15	8"	PVC	25.10	26.20	MANHOLE No 5	MANHOLE No 4	
16	4"	PVC	30.00	27.00	BLDG CHEMICAL DRAIN	MANHOLE No 4	
17	4"	PVC	30.00	27.00	BLDG CHEMICAL DRAIN	MANHOLE No 4	
18	6"	PVC	27.00	26.54	BLDG R.O. DRAINS	MANHOLE No 5	
19	10"	C900	22.92	22.92	BACKFLOW PREVENTOR VAULT	LINE 20	WATER LOOP A
20	6"	C900	23.08	25.33	BACKFLOW PREVENTOR VAULT	LINE 19	WATER LOOP B
21	10"	C900	22.92	22.92	LOOP CONNECTION	CALCITE FACILITY RINSE WATER	
22	6"	C900	23.08	23.08	LINE 19	FIRE HYDRANT	
23	6"	C900	23.08	23.08	LINE 20	FIRE HYDRANT	
24	2"	PVC	23.25	23.25	LINE 19	YARD HYDRANT	
25	2"	PVC	23.25	23.25	LINE 19	2" WATER SUPPLY TO ADMIN BLDG	
26	2"	PVC	23.25	23.25	LINE 20	YARD HYDRANT	
27	4"	PVC	23.17	30.00	LINE 20	4" WATER SUPPLY TO CHEM FEED BLDG	
28	2"	PVC	23.25	23.25	LINE 20	2" SUPPLY TO CO2 FEED PANEL	
29	2"	PVC	23.25	23.25	LINE 20	YARD HYDRANT	
30	2"	PVC	23.25	23.25	LINE 29	YARD HYDRANT	
31	2"	PVC	23.25	23.25	LINE 21	YARD HYDRANT	
32	2"	PVC	23.25	23.25	LINE 31	YARD HYDRANT	
33	1"	PVC	33.00	26.00	CAUSTIC FEED ROOM (CARRIER WATER)	TREATED WATER VAULT	
34	1"	PVC	33.00	26.00	CORROSION INHIBITOR ROOM (CARRIER WATER)	TREATED WATER VAULT	
35	1"	PVC	33.00	26.00	HYPOCHLORITE FEED ROOM	TREATED WATER VAULT	
36	1"	PVC	33.00	26.00	HYPOCHLORITE FEED ROOM	FINISHED WATER VAULT	
37	2"	PVC	32.00	26.00	FUTURE AMMONIA (2" CONDUIT)	FINISHED WATER VAULT	
38	2"	PVC	26.00	33.00	RAW WATER SAMPLE LINE (1" TUBING IN 2" C)	RAW WATER PANEL	SEE DWG I112
39	3/4"	PVC	26.00	34.00	RAW WATER SAMPLE	SAMPLE SINK IN LAB	
40	2"	PVC	24.67	33.00	CALCITE INFLUENT (1" TUBING IN 2" C)	PRE CALCITE SAMPLE PANEL	SEE DWG I112
41	2"	PVC	22.33	33.00	CALCITE EFFLUENT (1" TUBING IN 2" C)	POST CALCITE SAMPLE PANEL	SEE DWG I112
42	3/4"	PVC	22.33	33.00	FINISHED WATER VAULT	FINISHED WATER CHLORINE ANALYZER PANEL	SEE DWG I112
43	2"	PVC	33.00	22.33	FUTURE CAUSTIC FEED (EMPTY CONDUIT)	FINISHED WATER VAULT	
44	3/4"	PVC	22.33	34.00	FINISHED WATER SAMPLE LINE (1" TUBING IN 2" C)	SAMPLE SINK IN LAB	
45	2"	PVC	24.17	23.80	SAMPLE MANHOLE AT CALCITE FACILITY	MANHOLE No 3	
46	4"	PVC	30.00	23.80	CALCITE FACILITY FLOOR DRAIN	MANHOLE No 3	
47	2"	PVC	20.50	26.50	BLDG TRENCH SUMP PUMP	SUMP PUMP DISCHARGE TO MANHOLE 5	
48	1"	PVC	32.00	26.00	FLUORIDE FEED ROOM	TREATED WATER VAULT	
49	4"	PVC	29.25	24.75	FLUORIDE FEED BLDG	LINE 11	
50	4"	PVC	21.75	20.50	BACKFLOW PREVENTOR VAULT DRAIN	RAW WATER VAULT SUMP	
51	2"	PVC	21.33	20.83	FINISHED WATER VAULT DRAIN	FINISHED WATER VAULT SUMP	
52	2"	PVC	21.17	20.83	TREATED WATER VAULT MANHOLE DRAIN	TREATED WATER VAULT SUMP	
53	2"	PVC	21.67	20.83	BYPASS VAULT DRAIN	TREATED WATER VAULT SUMP	
54	8"	PVC	22.25	23.22	EXISTING MANHOLE	MANHOLE No 7	
55	8"	PVC	23.32	23.92	MANHOLE No 7	MANHOLE No 3	
56	8"	PVC	24.02	24.59	MANHOLE No 3	MANHOLE No 2	
57	8"	PVC	24.69	25.25	MANHOLE No 2	MANHOLE No 1	
58	2"	PVC	21.33	20.50	FINISHED WATER MANHOLE DRAIN	FINISHED WATER VAULT SUMP	
59	6"	C900	22.92	22.92	LINE 21	FIRE HYDRANT	
60	2"	PVC	23.25	23.25	LINE 19	YARD HYDRANT	
61	24"	C900	13.15	22.75	CONNECTION VALVE AT CONTRACT END	RAW WATER METER VAULT	SEE PROFILE 5/C021

MANHOLE SCHEDULE

MH#	RIM EL	Northing	Easting	INV OUT	DIA	INV IN (1)	DIA	INV IN (2)	DIA	INV IN (3)	DIA	INV IN (4)	DIA	COMMENTS
MH1	29.25	170933.54	2293137.48	25.25	8"									
MH2	27.00	170914.91	2293278.71	24.59	8"	24.69	8"							
MH3	27.00	171030.25	2293291.03	23.92	8"	24.02	8"	24.06	4"					
MH4	29.25	171074.59	2293024.37	26.00	8"	26.50	4"	26.50	4"					
MH5	29.25	171051.40	2293201.41	25.00	12"	25.10	8"	26.54	6"	26.50	2"			
MH6	29.25	171159.16	2293215.46	24.40	12"	24.50	12"							
MH7	27.00	171148.59	2293303.69	23.22	8"	23.32	8"	26.00	3"					

REVISIONS

THE WOOTEN COMPANY
120 North Boylan Avenue Raleigh, NC 27603-1423
919.828.0531 Fax 919.828.3589
License Number: F-0176

BRUNSWICK REGIONAL WATER AND SEWER H2GO
BRUNSWICK COUNTY NORTH CAROLINA
CONTRACT No. 4
REVERSE OSMOSIS WATER TREATMENT PLANT

WTP SITE PIPING PLAN

NORTH CAROLINA PROFESSIONAL ENGINEER SEAL 42531 CHRISTOPHER W. DAVIS
7-JUNE-20

DESIGNED BY: CWD
DRAWN BY: PMD/EML
CHECKED BY: CWD
PROJECT NO.: 3081-AB
DATE: JUNE 7, 2020
SCALE: AS NOTED

SHEET 11 OF 181

C012

1 C012 OVERALL PIPING PLAN
SCALE: 1" = 30'-0"

1"=30'-0" 30' 15' 0 30'

Print2PDFx.plt
29.9999 " in.
pdonaghy
6/4/2020 5:06:12 PM
T:\Projects\Brunswick_Regional_W&S_H2GO-3081\AB-Water_Supply&Treatment_Plant\Sheets\WTP\C012-OVERALL_PIPING.dgn

Default

LEGEND:

EXISTING		PROPOSED
	PROPERTY LINE	
	FENCE	
⋈	YARD VALVE	⋈
	TREE LINE	
	ACCESS DRIVE	
50	CONTOUR LINE	
	SILT FENCE	
	LIMITS OF DISTURBANCE	LOD LOD

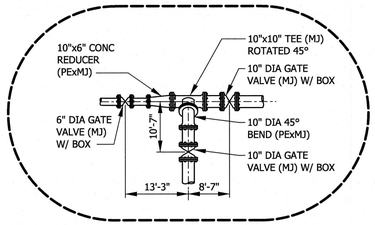

INSET A
SCALE: 1" = 5'-0"

CONTROL POINTS

CP No. 1	CP No. 2
REBAR	REBAR
EL 26.91	EL 26.63
N=171327.95	N=170991.78
E=2293330.01	E=2293317.41

100 YR FLOOD EL. 16.7 (PER FIRM MAP 37202197000J, MAP REVISED JUNE 6, 2006)

NOTES:

1. ALL INFORMATION COLLECTED THROUGH SURVEYED DATA. CONTRACTOR SHALL FIELD VERIFY ALL DIMENSIONS.
2. SEE THE GEOTECHNICAL AND SUBSURFACE REPORT IN SPECIFICATIONS FOR SPECIFIC INFORMATION ABOUT EACH BORE LOCATION AND FOUNDATION PREPARATION FOR STRUCTURES.
3. FOR MANHOLE INFORMATION, SEE SCHEDULE ON DWG C012.
4. SEE DETAIL 1/C094 FOR TYPICAL PIPING CROSSING DETAIL.
5. SEE DETAILS 3/C094, 7/C094 AND 8/C094 FOR TYPICAL PIPE BEDDING AND PARALLEL PIPES IN COMMON TRENCH.
6. ALL BURIED PIPE FITTINGS SHALL BE (MJ) MECHANICAL JOINT TYPE WITH THRUST BLOCKING PER DETAIL 4/C094, UNLESS NOTED OTHERWISE.
7. SEE DETAIL 15/M800 FOR PIPE CONCRETE ENCASEMENT DETAIL.

REVISIONS

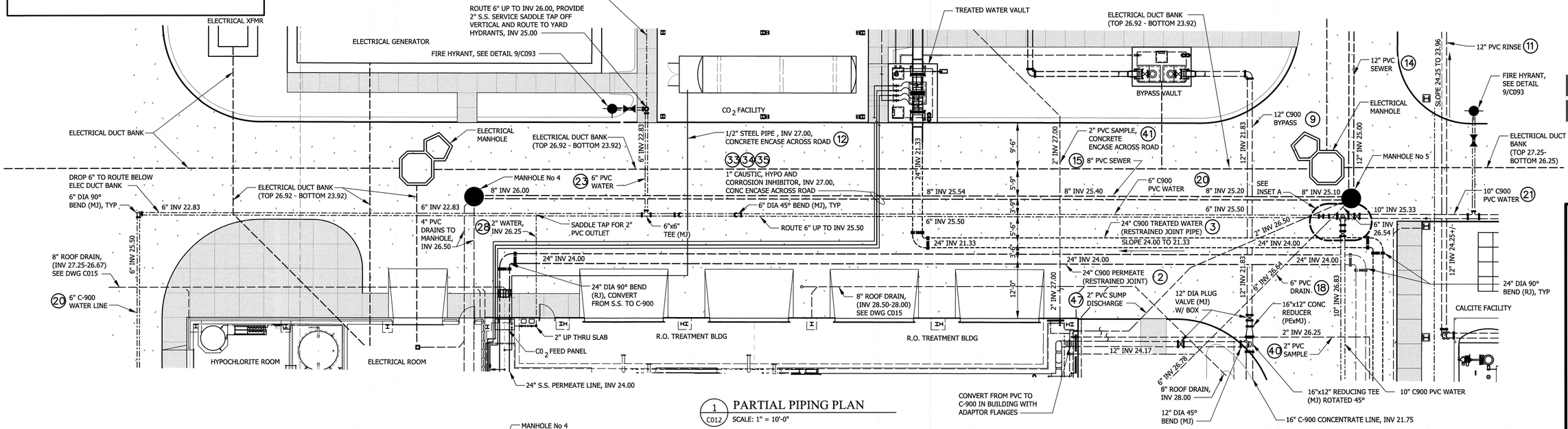

1 C012 PARTIAL PIPING PLAN
SCALE: 1" = 10'-0"

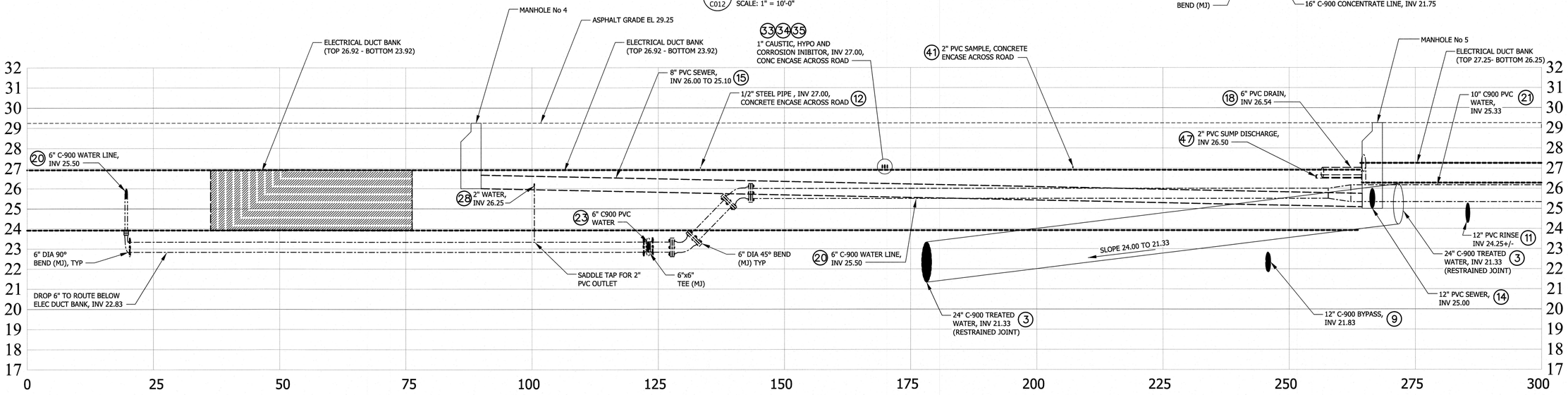

2 C013 PIPING PROFILE
SCALE: HORZ: 1" = 10'-0"
VERT: = 1" = 2'-6"

1"=10'-0" 10 5 0 10'

THE WOOTEN COMPANY
120 Worth Boylan Avenue Raleigh NC 27603-1423
919.828.0531 fax 919.834.3589
License Number: F-0315

BRUNSWICK REGIONAL WATER AND SEWER H2GO
BRUNSWICK COUNTY NORTH CAROLINA
CONTRACT No. 4
REVERSE OSMOSIS WATER TREATMENT PLANT
WTP SITE PIPING PLAN

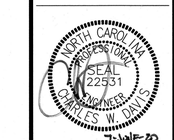

DESIGNED BY:	CWD
DRAWN BY:	PMD/EML
CHECKED BY:	CWD
PROJECT NO.:	3081-AB
DATE:	JUNE 7, 2020
SCALE:	AS NOTED

SHEET 12 OF 181

C013

Print2PDFx.plt
29.9999 " / in.
pdonaghy
6/4/2020 11:28:18 AM
T:\Projects\Brunswick_Regional_W&S_H2GO-3081\AB-Water_Supply&Treatment_Plant\Sheets\WTP\C013-PARTIAL-PIPING.dgn

Default

6' CHAIN LINK FENCE, SEE 2/C092

GATE

EIP

HIGH SERVICE PUMP STATION

x SLAB EL 29.25

SW EL 29.16

CENTER EP RADIUS
N 171200.83
E 2293012.19

FUTURE TREATED WATER STORAGE TANK

CENTER EP RADIUS
N 171179.96
E 2293172.17

4'-0" SIDEWALK, SEE DETAIL 5/C092

TREATED WATER STORAGE TANK

PROVIDE 3" PVC PIPE UNDER SIDEWALK FOR DRAINAGE, TYP IN 2 LOC

PROVIDE 3" PVC PIPE UNDER SIDEWALK FOR DRAINAGE, TYP IN 4 LOC

BACKWASH STORAGE TANK

MH#7

MH#6

SW EL 28.00

SW EL 27.00

SLAB EL 27.50

SW EL 26.92

SW EL 29.83

GRADE EL 29.75

50 LF OF 15" RCP
INV IN=27.00
INV OUT=26.67

N 171115.12
E 2292985.88

N=171078.30
E=2293229.50

XFMR
SLAB EL 29.08

GENERATOR
SLAB EL 29.08

CO 2 FACILITY

TREATED WATER VAULT

N 171090.43
E 2293175.61

SLAB EL 29.25

BOLLARDS EACH SIDE OF COLUMN (2 TOTAL, SEE DETAIL 1/C092

BOLLARDS AT END OF DRIVE (3 TOTAL, EQUALLY SPACED), SEE DETAIL 1/C092

MH#4

MH#5

MH#3

MH#2

MH#1

SLAB EL 30.00

CALCITE FACILITY

5'-0" SIDEWALK, SEE DETAIL 5/C092

CENTER EP RADIUS
N 171055.66
E 2292978.12

CENTER EP RADIUS
N 171064.19
E 2292990.00

CHEMICAL FEED FACILITY

F.F.E. = 30.00

RO TREATMENT FACILITY

CENTER EP RADIUS
N 171011.69
E 2293160.30

CENTER EP RADIUS
N 170963.46
E 2293154.00

ADMIN AND CONTROL FACILITY

CENTER EP RADIUS
N 170961.58
E 2292960.81

SEE DETAIL 2/C011 FOR HANDICAPPED RAMP AT SIDEWALK

FINISHED WATER VAULT

BACKFLOW PREVENTOR VAULT

RAW WATER VAULT

64 LF OF 15" RCP
INV IN=27.00
INV OUT=26.67

CENTER EP RADIUS
N 170852.11
E 2293104.18

25' ROADWAY GATE, SEE DET. 5/C091 AND SEE NOTE 5

6' CHAIN LINK FENCE, SEE 2/C092

1 C014 SIDEWALK AND ASHPALT PLAN

SCALE: 1" = 20'-0"

1"=20'-0" | 20' 10' 0 20' | 1/2"=1'-0" | 12" 0 1' 3'

LEGEND:

EXISTING		PROPOSED
	PROPERTY LINE	
	FENCE	
⋈	YARD VALVE	⋈
	TREE LINE	
	ACCESS DRIVE	
50	CONTOUR LINE	
	SILT FENCE	
	LIMITS OF DISTURBANCE	LOD — LOD

AREA OF DISTURBANCE=5.32 ACRES

CONTROL POINTS

CP No. 1	CP No. 2
REBAR	REBAR
EL 26.91	EL 26.63
N=171327.95	N=170991.78
E=2293330.01	E=2293317.41

100 YR FLOOD
EL. 16.7
(PER FIRM MAP 37202197000J, MAP REVISED JUNE 6, 2006)

NOTES:

1. ALL EROSION CONTROL MEASURES SHALL BE CONSTRUCTED BEFORE SITE CLEARING AND GRADING OPERATIONS SHALL PROCEED.
2. SEE THE GEOTECHNICAL AND SUBSURFACE REPORT IN SPECIFICATIONS FOR SPECIFIC INFORMATION ABOUT EACH BORE LOCATION AND FOUNDATION PREPARATION FOR STRUCTURES.
3. CONTRACTOR SHALL LOCATE STRUCTURE CORNERS AND/OR CENTERS USING COORDINATES IN RELATION TO TBM SHOWN. THE CONTRACTOR SHALL BE RESPONSIBLE FOR SITE STAKING AND GRADING PLAN AND OFFSETS REQUIRED FOR CONTROL POINTS.
4. FOR MANHOLE INFORMATION, SEE SCHEDULE ON DWG C012.
5. ELECTRIC GATE SHALL BE EQUIPPED WITH SIREN OPERATED PER [F]503.6 OF THE 2012 NC FIRE PREVENTION CODE.
6. PROVIDE SITE ADDRESS NUMBERS A MINIMUM OF 4"x1/2" IN STROKE WIDTH IN A CONTRASTING COLOR ON THE ASPHALT PAVEMENT ACCESS DRIVE PER [F]505.1 OF THE 2012 NC FIRE PREVENTION CODE.

CP No. 2
REBAR
EL 26.63
N=170991.78
E=2293317.41

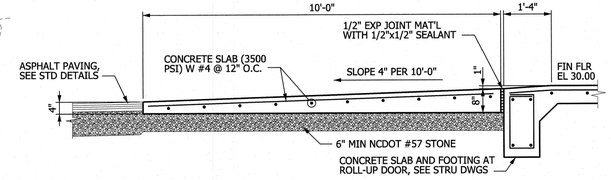

2 C014 CONCRETE APRON AT ROLL-UP DOOR

SCALE: 1/2" = 1'-0"

REVISIONS

THE WOOTEN COMPANY
120 North Boylan Avenue Raleigh, NC 27603-1423
919.828.0531 fax 919.834.3589
License Number: F-0113

BRUNSWICK REGIONAL WATER AND SEWER H2GO
BRUNSWICK COUNTY NORTH CAROLINA
CONTRACT No. 4
REVERSE OSMOSIS WATER TREATMENT PLANT

SIDEWALK AND ASPHALT PLAN

NORTH CAROLINA PROFESSIONAL ENGINEER SEAL 29253 CHARLES W. DAVIS
7-June-20

DESIGNED BY: CWD
DRAWN BY: PMD/EML
CHECKED BY: CWD
PROJECT NO.: 3081-AB
DATE: JUNE 7, 2020
SCALE: AS NOTED

SHEET 13 OF 181

C014

Print2PDFx.plt
20.0000 ' / in.
pdonaghy
6/4/2020 11:58:18 AM
T:\Projects\Brunswick_Regional_W&S_H2GO-3081\AB-Water_Supply&Treatment_Plant\Sheets\WTP\C014-SIDEWALK AND ASHPALTP PLAN.dgn

ROOF DRAINAGE NOTES:

1. SEE DETAIL 2/C015 FOR PIPING CONNECTION AT DOWNSPOUTS
2. DOWNSPOUTS SHOWN IN LOCATIONS AS SHOWN ON ARCHITECTURAL PLANS. CONTRACTOR SHALL COORDINATE WITH THE METAL BUILDING FABRICATOR TO DETERMINE EXACT NUMBER AND LOCATION OF DOWNSPOUTS.
3. PROVIDE 8" HDPE FLAP VALVE AT OUTLETS TO 8" HEADER PIPES.

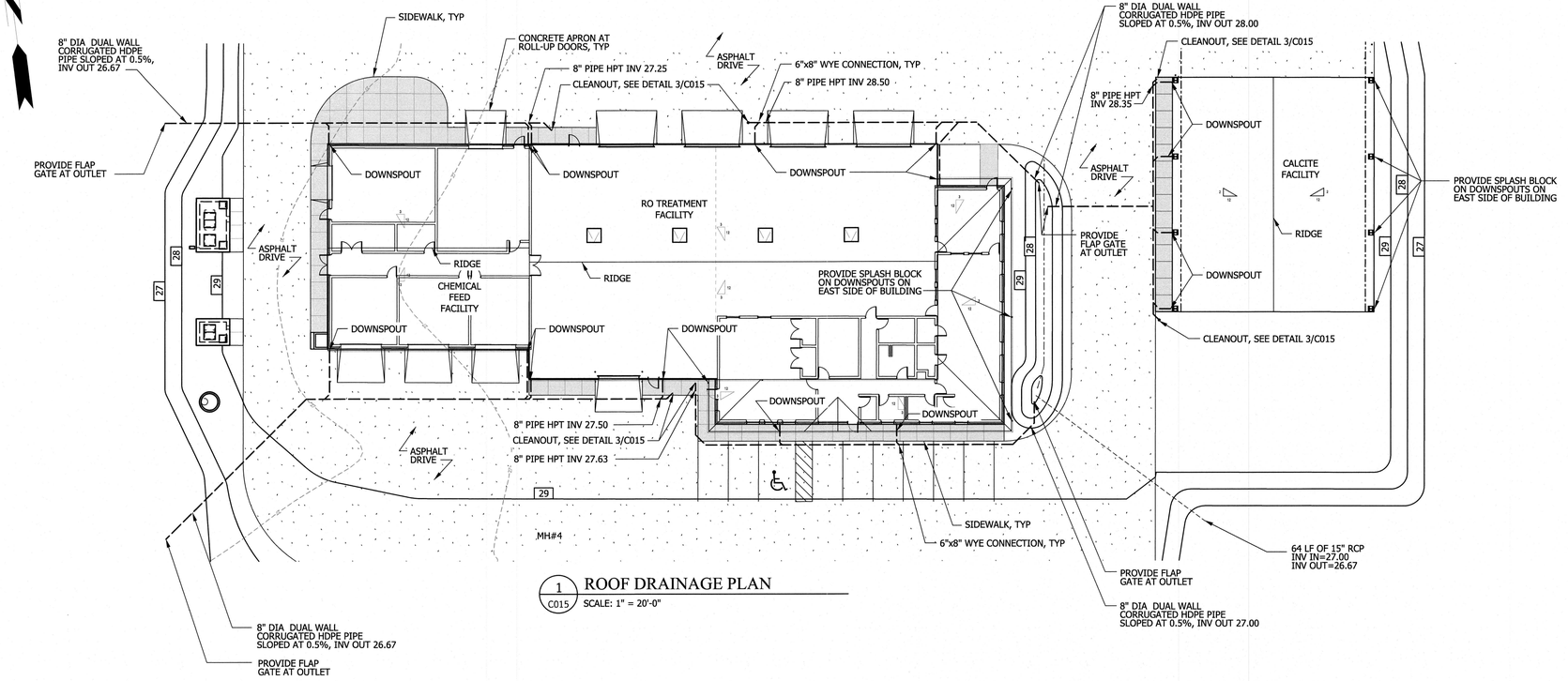

1 C015 ROOF DRAINAGE PLAN
SCALE: 1" = 20'-0"

LEGEND:

EXISTING		PROPOSED
	PROPERTY LINE	
	FENCE	
	YARD VALVE	
	TREE LINE	
	ACCESS DRIVE	
50	CONTOUR LINE	
	SILT FENCE	
	LIMITS OF DISTURBANCE	LOD — LOD

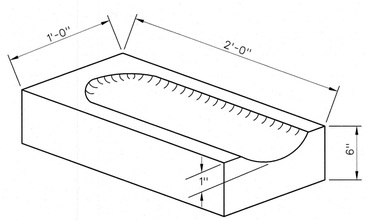

4 C015 CONCRETE SPLASH PAD
NO SCALE

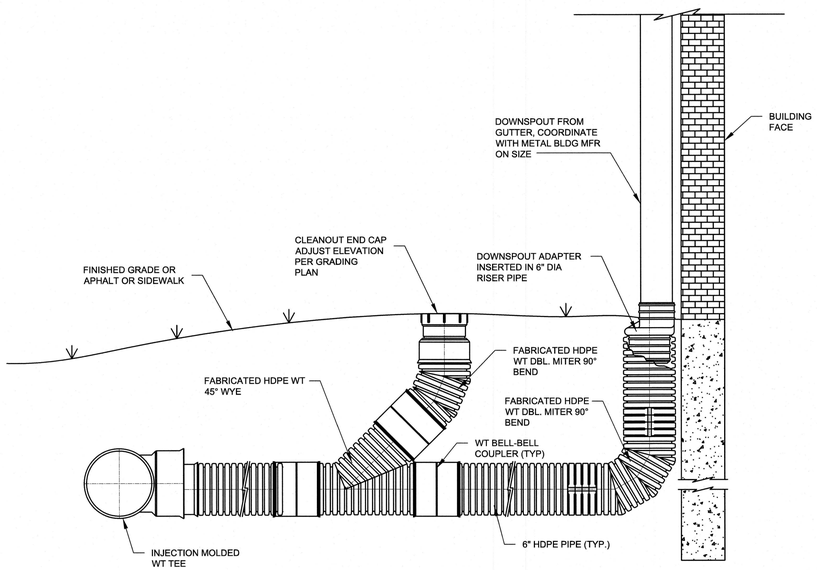

2 C015 DETAIL - ROOF DRAIN CONNECTION
NO SCALE

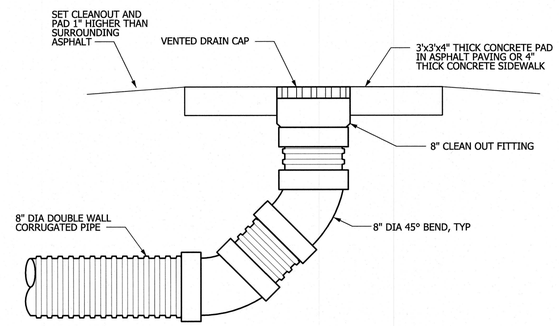

3 C015 DETAIL - CLEAN OUT / VENT
NO SCALE

ROOF DRAIN PIPE SPECIFICATION

PIPE REQUIREMENTS

ADS N-12 WT IB PIPE (PER AASHTO) SHALL HAVE SMOOTH INTERIOR AND ANNULAR EXTERIOR CORRUGATIONS.
- 4 THROUGH 10-INCH (100 TO 250 mm) PIPE SHALL MEET AASHTO M252, TYPE S.
- 12 THROUGH 60-INCH (300 TO 1500 mm) PIPE SHALL MEET AASHTO M294, TYPE S OR ASTM F2306.
- MANNING'S "n" VALUE FOR USE IN DESIGN SHALL BE 0.012.

JOINT PERFORMANCE

PIPE SHALL BE JOINED USING A BELL AND SPIGOT JOINT MEETING THE REQUIREMENTS OF AASHTO M252, AASHTO M294, OR ASTM F2306. THE JOINT SHALL BE WATERTIGHT ACCORDING TO THE REQUIREMENTS OF ASTM D3212. GASKETS SHALL MEET THE REQUIREMENTS OF ASTM F477. GASKETS SHALL BE INSTALLED BY THE PIPE MANUFACTURER AND COVERED WITH A REMOVABLE, PROTECIVE WRAP TO ENSURE THE GASKET IS FREE FROM DEBRIS. A JOINT LUBRICANT AVAILABLE FROM THE MANUFACTURER SHALL BE USED ON THE GASKET AND BELL DURING ASSEMBLY. 12- THROUGH 60-INCH (300 TO 1500 MM) DIAMETERS SHALL HAVE AN EXTERIOR BELL WRAP INSTALLED BY THE MANUFACTURER.

FITTINGS

FITTINGS SHALL CONFORM TO AASHTO M252, AASHTO M294, OR ASTM F2306. BELL AND SPIGOT CONNECTIONS SHALL UTILIZE A WELDED BELL AND VALLEY OR SADDLE GASKET MEETING THE WATERTIGHT JOINT PERFORMANCE REQUIREMENTS OF AASHTO M252, AASHTO M294, OR ASTM F2306.

FIELD PIPE AND JOINT PERFORMANCE

TO ASSURE WATERTIGHTNESS, FIELD PERFORMANCE VERIFICATION MAY BE ACCOMPLISHED BY TESTING IN ACCORDANCE WITH ASTM F2487. APPROPIATE SAFETY PRECAUTIONS MUST BE USED WHEN FIELD-TESTING ANY PIPE MATERIAL. CONTACT THE MANUFACTURER FOR RECOMMENDED LEAKAGE RATES.

MATERIAL PROPERTIES

MATERIAL FOR PIPE AND FITTING PRODUCTION SHALL BE HIGH-DENSITY POLYETHYLENE CONFORMING WITH THE MINIMUM REQUIREMENTS OF CELL CLASSIFICATION 424420C FOR 4- INCH THROUGH 10- INCH (100 TO 250 mm) DIAMETERS, AND 435400C FOR 12-INCH THROUGH 60-INCH (300 TO 1500 mm) DIAMETERS, AS DEFINED AND DESCRIBED IN THE LATEST VERSION OF ASTM D3350, EXCEPT THAT CARBON BLACK CONTENT SHOULD NOT EXCEED 4%. THE 12- THROUGH 60-INCH (300 - 1500 mm) PIPE MATERIAL SHALL COMPLY WITH THE NOTCHED CONSTANT LIGAMENT-STRESS (NCLS) TEST AS SPECIFIED IN SECTION 9.5 AND 5.1 OF AASHTO M294 AND ASTM F2306 RESPECTIVELY.

INSTALLATION

INSTALLATION SHALL BE IN ACCORDANCE WITH ASTM D2321 AND ADS RECOMMENDED INSTALLATION GUIDELINES, WITH THE EXCEPTION THAT MINIMUM COVER IN TRAFFICKED AREAS FOR 4- THROUGH 48-INCH (100 TO 1200 mm) DIAMETERS SHALL BE ONE FOOT. BACKFILL FOR MINIMUM COVER SITUATIONS SHALL CONSIST OF CLASS 1 (COMPACTED), CLASS 2 (MINIMUM 90% SPD) OR CLASS 3 (MINIMUM 95%) MATERIAL. MAXIMUM FILL HEIGHTS DEPEND ON EMBEDMENT MATERIALS AND COMPACTION LEVEL.

1"=20'-0" 20' 10' 0 20'

REVISIONS

THE WOOTEN COMPANY
120 North Boylan Avenue Raleigh, NC 27603-1423
919.828.0531 Fax 919.834.3599
License Number: F-0115

BRUNSWICK REGIONAL WATER AND SEWER H2GO
BRUNSWICK COUNTY NORTH CAROLINA
CONTRACT No. 4
REVERSE OSMOSIS WATER TREATMENT PLANT
ROOF DRAINAGE PLAN AND DETAILS

NORTH CAROLINA PROFESSIONAL SEAL 22531 ENGINEER CHARLES W. DAVIS
7-JUNE-20

DESIGNED BY: CWD
DRAWN BY: PMD/EML
CHECKED BY: CWD
PROJECT NO.: 3081-AB
DATE: JUNE 7, 2020
SCALE: AS NOTED

SHEET 14 OF 181

C015

Default
Print2PDFx.plt
20.0000 ' / in.
pdonaghy
6/4/2020 11:59:04 AM
T:\Projects\Brunswick_Regional_W&S_H2GO-3081\AB-Water_Supply&Treatment_Plant\Sheets\WTP\C015-ROOF DRAINAGE PLAN.dgn

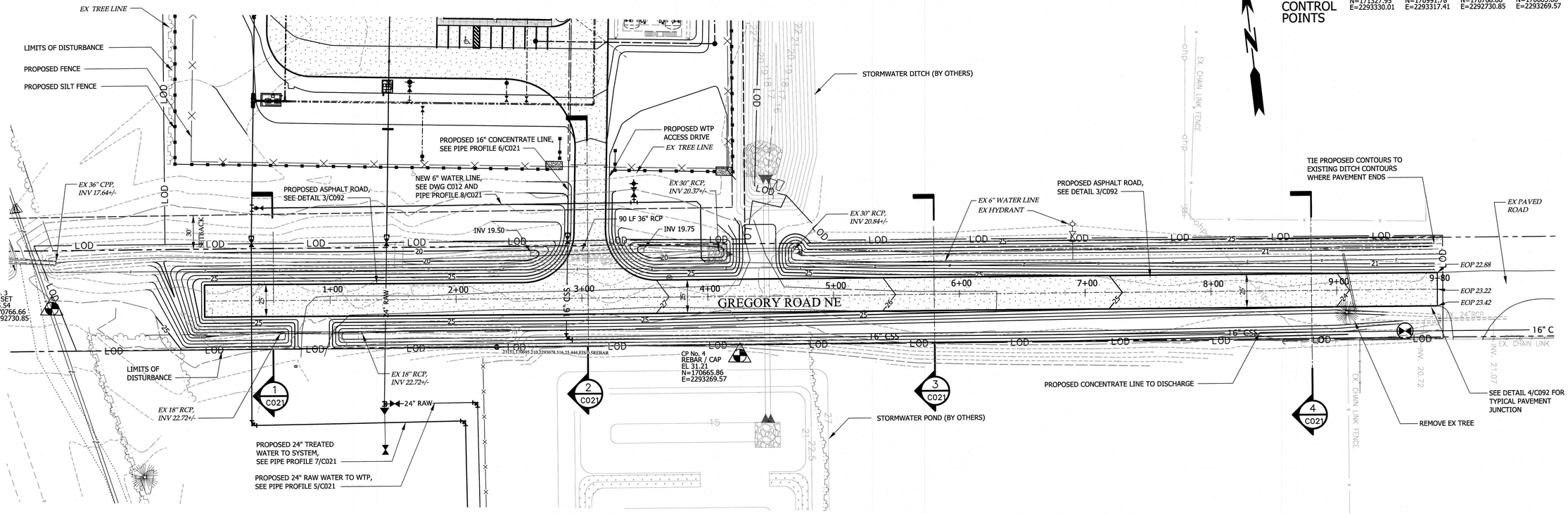

1 C020 ROADWAY PLAN

SCALE: 1" = 40'-0"

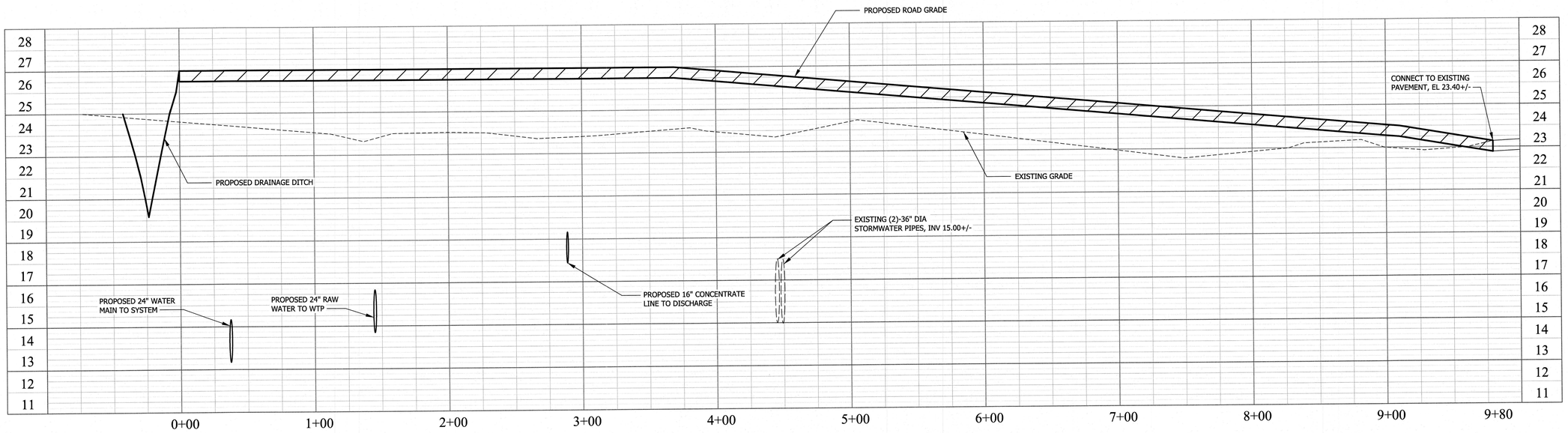

1 C020 ROADWAY PROFILE

SCALE: HORZ: 1" = 40'-0"
VERT: 1" = 8'-0"

1"=40'-0"

40' 20' 0 40'

CONTROL POINTS

CP No. 1	CP No. 2	CP No. 3	CP No. 4
REBAR	REBAR	NAIL SET	REBAR / CAP
EL 26.91	EL 26.63	EL 25.54	EL 31.21
N=171327.95	N=170991.78	N=170766.66	N=170665.86
E=2293330.01	E=2293317.41	E=2292730.85	E=2293269.57

REVISIONS

THE WOOTEN COMPANY
120 North Boylan Avenue Raleigh, NC 27603-1423
919.828.0531 Fax 919.834.3989
License Number: F-0113

BRUNSWICK REGIONAL WATER AND SEWER AUTHORITY
BRUNSWICK COUNTY NORTH CAROLINA
NEW GROUND WATER SUPPLY AND REVERSE OSMOSIS WATER TREATMENT PLANT

GREGORY ROAD NORTHEAST EXTENTION
PLAN AND PROFILE

NORTH CAROLINA PROFESSIONAL SEAL 32531 ENGINEER CHARLES W. DAVIS
7-10-20

DESIGNED BY:	KME
DRAWN BY:	PMD
CHECKED BY:	CWD
PROJECT NO.:	3081-AB
DATE:	JUNE 7, 2020
SCALE:	HORZ.: 1" = 40' VERT.: 1" = 8'

SHEET 15 OF 181

C020

Default
Print2PDFx.plt
39.9999 / in.
ptonaghy
6/5/2020 11:24:59 AM
T:\Projects\Brunswick_Regional_W&S_H2CO-3081\AB-Water_Supply&Treatment_Plant\Sheets\WTP\C020-ROAD EXTENTION.dgn

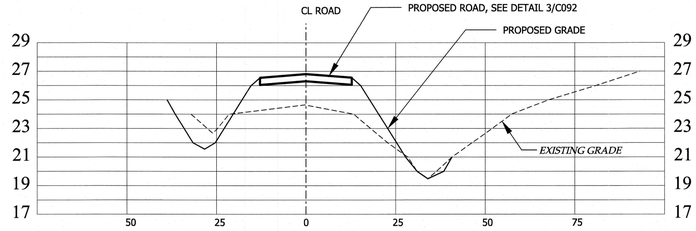

1 C020 ROAD SECTION 0+55
SCALE : HORZ: 1" = 20'-0"
VERT: 1" = 5'-0"

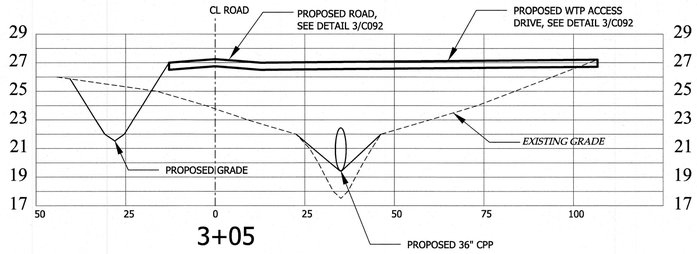

2 C020 ROAD SECTION 3+05
SCALE : HORZ: 1" = 20'-0"
VERT: 1" = 5'-0"

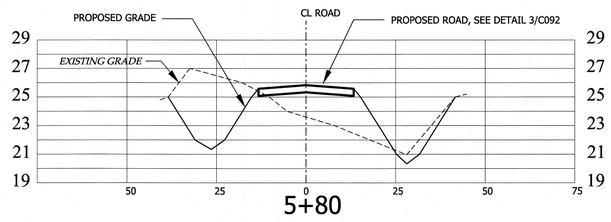

3 C020 ROAD SECTION 5+80
SCALE : HORZ: 1" = 20'-0"
VERT: 1" = 5'-0"

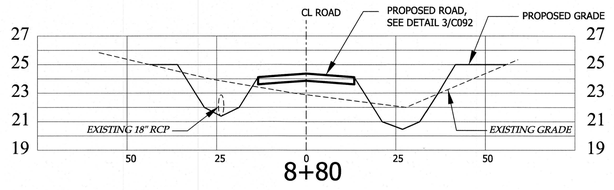

4 C020 ROAD SECTION 8+80
SCALE : HORZ: 1" = 20'-0"
VERT: 1" = 5'-0"

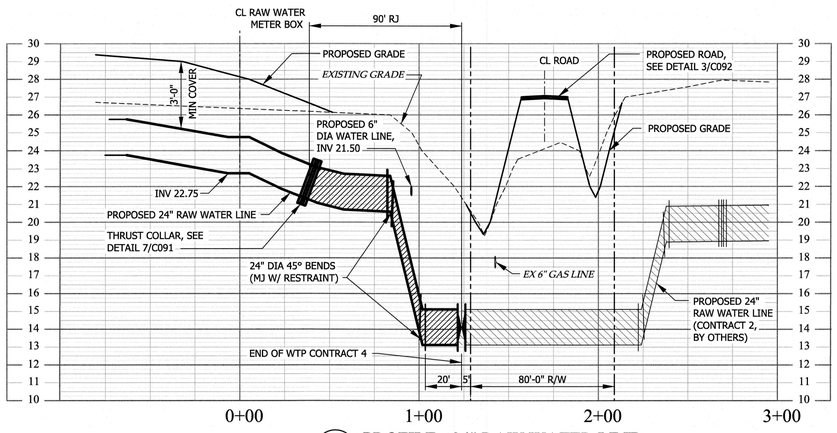

5 C012 PROFILE - 24" RAW WATER LINE
SCALE : HORZ: 1" = 40'-0"
VERT: 1" = 4'-0"

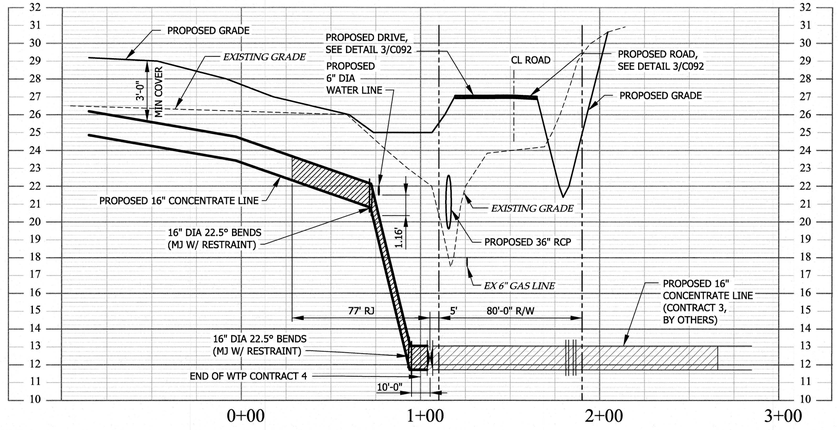

6 C012 PROFILE - 16" CONCENTRATE LINE
SCALE : HORZ: 1" = 40'-0"
VERT: 1" = 4'-0"

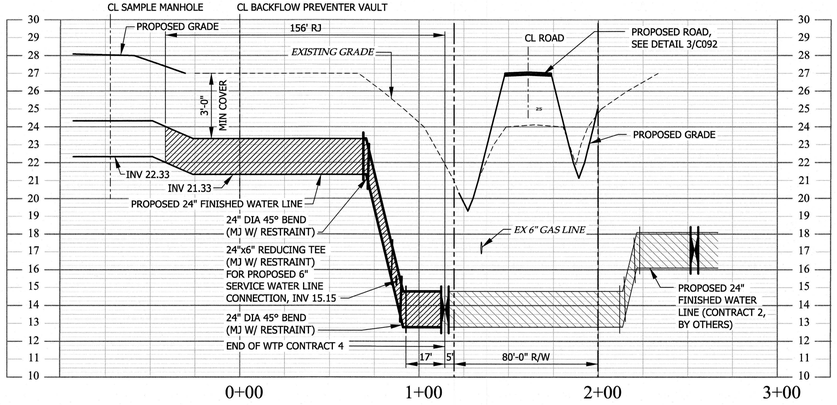

7 C012 PROFILE - 24" FINISHED WATER LINE
SCALE : HORZ: 1" = 40'-0"
VERT: 1" = 4'-0"

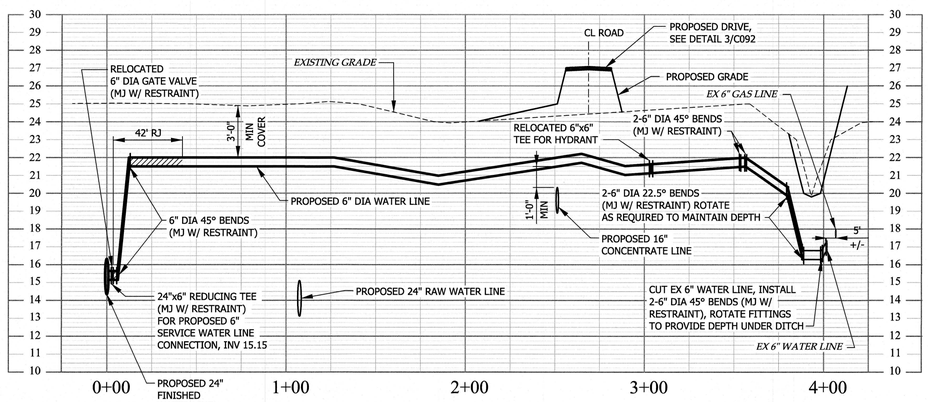

8 C012 PROFILE - 6" SERVICE WATER LINE
SCALE : HORZ: 1" = 40'-0"
VERT: 1" = 4'-0"

NOTES:

1. PIPE PROFILES DETAIL CONNECTIONS BETWEEN CONTRACT No 4 - WATER TREATMENT PLANT AND CONTRACT No 2 - RAW AND FINISHED LINEWORK AND CONCTRACT No 3 - CONCENTRATE LINEWORK. CONTRACT No 2 AND No 3 SHALL BRING THE PIPES 5'-0" PAST THE RIGHT OF WAY AND PROVIDE VALVE AND CAP FOR CONNECTION WITH CONTRACT No 4 PIPES. INFORMATION SHOWN ON THE PROFILES MAY CHANGE AFTER INSTALLATION DUE TO FIELD CHANGES AND CONDITIONS. CONTRACTOR SHALL COORDINATE WITH CONTRACT No 2 AND No 3 CONTRACTOR FOR CHANGES. FIELD ADJUST ELEVATIONS AND PIPE ALIGNMENT FOR CONNECTIONS TO CONTRACT No 2 AND No 3 AS REQUIRED.
2. RELOCATE 6" VALVES, TEE AND HYDRANT FROM THE EXISTING 6" DIA WATER LINE. VALVES MAY REQUIRE ADJUSTMENT OF STEM LENGTH AND VALVE BOX EXTENSION BASED ON NEW LOCATION AND DEPTH OF VALVES.
3. PIPES SHOWN WITH HATCHING REPRESENT PIPING WITH RESTRAINT JOINT AND FITINGS.

1"=20'-0"
20' 10' 0 20'

REVISIONS

THE WOOTEN COMPANY
120 North Boylan Avenue Raleigh, NC 27603-1423
919.828.0531 Fax 919.834.3589
License Number: F-0115

BRUNSWICK REGIONAL WATER AND SEWER H2GO
BRUNSWICK COUNTY NORTH CAROLINA
CONTRACT No. 4
REVERSE OSMOSIS WATER TREATMENT PLANT
GREGORY ROAD NORTHEAST EXTENTION
ROADWAY SECTIONS AND PIPE PROFILES

NORTH CAROLINA PROFESSIONAL SEAL 32531 ENGINEER CHARLES W. DAVIS
7-JUNE-20

DESIGNED BY: CWD
DRAWN BY: PMD/EML
CHECKED BY: CWD
PROJECT NO.: 3081-AB
DATE: JUNE 7, 2020
SCALE: HORZ.: 1" = 20' VERT.: 1" = 5'

SHEET 16 OF 181

C021

Default
Print2PDFx.plt
20.0000 " / in.
pdonaghy
6/4/2020 11:46:11 AM
T:\Projects\Brunswick_Regional_W&S_H2GO-3081\AB-Water_Supply&Treatment_Plant\Sheets\WTP\C021-ROAD SECTIONS.dgn

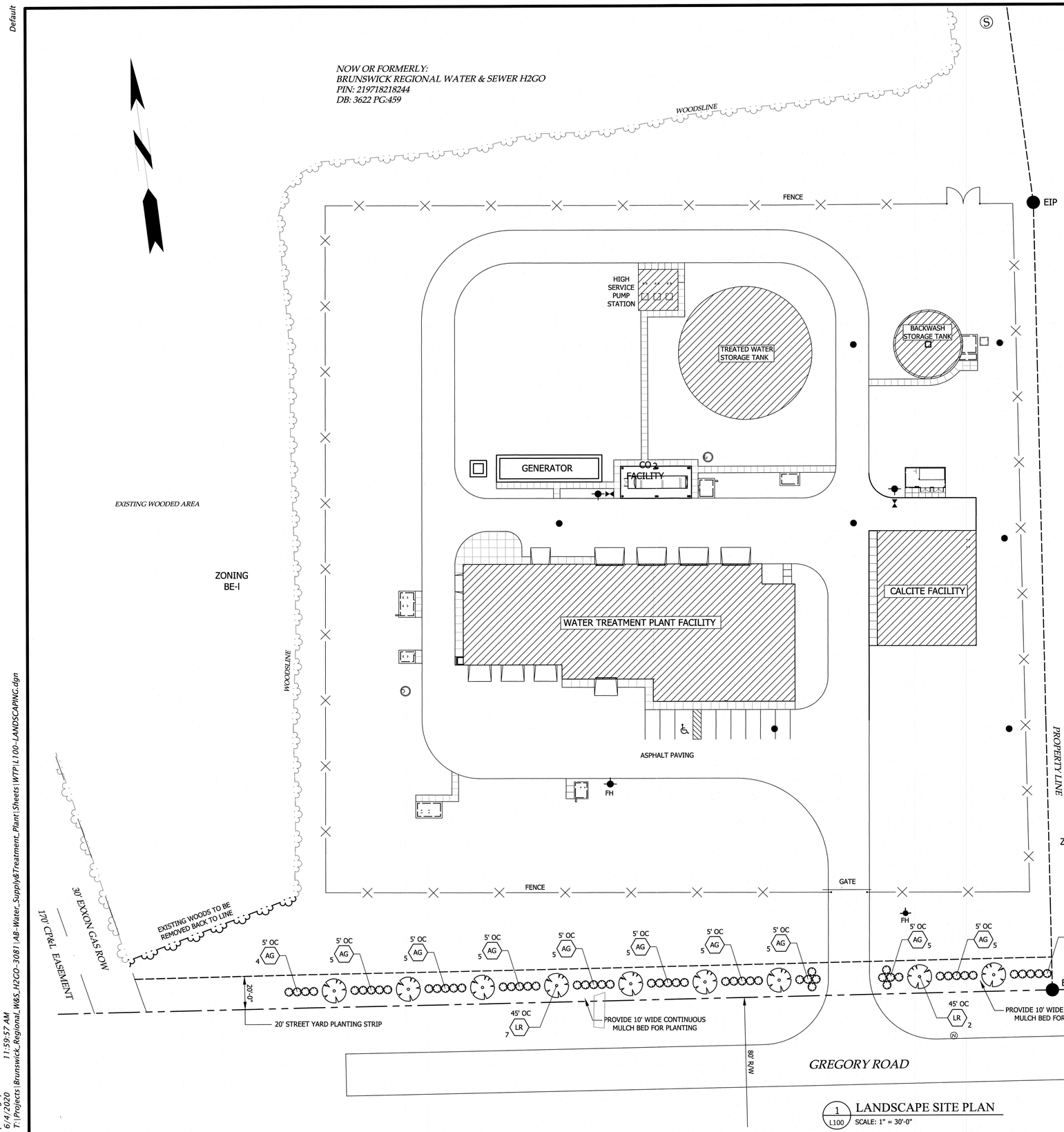

1 L100 LANDSCAPE SITE PLAN
SCALE: 1" = 30'-0"

1"=30'-0" 30' 15' 0 30'

LANDSCAPE CALCULATIONS

PARCEL INFORMATION
PARCEL ID: 0470003630
PARCEL PIN: 219718218244
ACREAGE: 18.40
ZONING: 1

STREET YARD LANSCAPING
10' STREET YARD LANDSCAPE STRIP ADJACENT TO RIGHT OF WAY.
1 OVERSTORY TREE (8' IN HEIGHT MIN.) PER 50' LINEAR STREET FRONTAGE.
6 SHRUBS (12" IN HEIGHT MIN.) PER 50' OF LINEAR STREET FRONTAGE.

445" / 50' = 8.90 x 1 = 8.90 = 9 OVERSTORY TREES REQUIRED / PROVIDED
445'/ 50' = 8.90 x 6 = 53.40 = 54 SHRUBS REQUIRED / PROVIDED

TREE PRESERVATION
15 EXISTING TREES (GREATER THAN 15' IN HEIGHT AT MATURITY) PER ACRE EQUALING AT LEAST 30 CALIPER INCHES SHALL BE RETAINED.

18.40 x 15 = 276 = 276 EXISTING TREES REQUIRED / PROVIDED
REQUIEMENTS MET BY EXISTING WOODED AREA.

PARKING LOT LANDSCAPING
PARKING AREA HAS LESS THAN TWENTY (20) PARKING SPACES.

LANDSCAPE BUFFERS
NORTHERN, SOUTHERN AND EASTERN PROPERTY LINES ARE NOT ADJACENT TO A RESIDENTIAL USE AND/OR ZONING DISTRICT.

170' CP&L TRANSMISSION LINE EASMENT WITHIN BUFFER BOUNDRY OF WESTERN PROPERTY LINE. EASMENT IS ADJACENT TO EXISTING WOODED AREA.

LANDSCAPE MATERIAL LIST

TREES	QTY	BOTANICAL NAME / COMMON NAME	CONTAINER	HEIGHT	REMARKS
LR	9	Liquidamber rotundiloba / Sweet Gum	B&B	8' min.	Single Staight Leader, Full & Heavy
SHRUBS	QTY	BOTANICAL NAME / COMMON NAME	CONTAINER	HEIGHT	REMARKS
AG	54	Abelia x grandiflora / Glossy Abelia	5 gal	1'	Full & Heavy, 5' o.c.

GENERAL LANDSCAPING NOTES:

1. ALL PLANTS SHALL BE INSTALLED ACCORDING TO PLAN.
2. PLANT MATERIAL SUBSTITUTIONS ALLOWED ONLY UPON WRITTEN PERMISSION OF THE ENGINEER.
3. INSTALLTION OF PLANT MATERIALS SHALL BE BY A LANDSCAPE CONTRACTOR REGISTERED IN THE STATE OF NORTH CAROLINA.
4. ALL PLANT MATERIAL SHALL BE FIELD GROWN, PLANTS SHALL HAVE A HABIT OF GROWTH THAT IS NORMAL FOR THE SPECIES AND SHALL BE SOUND, HEALTHY, VIGOROUS AND FREE FROM INSECTS, DISEASES AND INJURIES. ALL PLANTS SHALL EQUAL OR EXCEED THE MEASUREMENTS SPECIFIED IN THE PLANT LIST. REQUIREMENTS FOR MEASUREMENTS, BRANCHING, GRADING, QUALITY, BALLING AND BURLAPPING OF PLANTS IN THE PLANT SCHEDULE SHALL GENERALLY FOLLOW THE CODE STANDARDS CURRENTLY RECOMMENDED IN THE AMERICAN STANDARDS FOR NURSERY STOCK. PRUNE TO SHAPE, PRUNING ONLY BROKEN OR OVERLAPPING/RUBBING BRANCHES ONLY AS NECESSARY AT TIME OF PLANTING.
5. VERIFY LOCATION OF ALL UTILITY LINES, ABOVE AND BELOW GROUND, PRIOR TO COMMENCING INSTALLATION. THE LANDSCAPE CONTRACTOR IS RESPONSIBLE FOR ANY DAMAGE MADE TO UTILITIES THROUGH THE ACTIONS OF HIS OR HER EMPLOYEES.
6. ANALYZE ON-SITE SOIL TO ASCERTAIN PERCENTAGE OF NITROGEN, PHOSPHORUS, POTASH, SOLUBLE SALT AND ORGANIC MATTER, AND pH VALUE PRIOR TO INSTALLING PLANT MATERIALS. LIME APPLICATION RATE AND FERTILIZER FORMULA RATE SHALL BE BASED ON LABORATORY ANALYSIS. WRITTEN PROOF OF ANALYSIS AND APPLICATION RATES SHALL BE MAINTAINED.
7. PLANTING SOIL SHALL BE A UNIFORM MIXTURE OF 5% BY VOLUME PEAT OR OTHER APPROVED ORGANIC MATTER SUCH AS DECAYED BARK, SAWDUST OR COMPOST MATERIAL WITH ON-SITE SOIL. SATURATE SOIL WITH WARM WATER TO TEST DRAINAGE. THE LANDSCAPE CONTRACTOR SHALL BE RESPONSIBLE FOR ADEQUATE DRAINAGE FROM ALL PLANT PITS AND PLANT BEDS. IF DURING THE PLANTING OPERATIONS, THE LANDSCAPE CONTRACTOR DETERMINES THAT DRAINAGE CONDITIONS ARE SUCH THAT DRAIN LINES OR OTHER DRAINAGE IMPROVEMENT MEASURES ARE NECESSARY, HE OR SHE SHALL INSTALL THE NECESSARY MEASURES.
8. DELIVER FRESHLY DUG PLANT MATERIALS AFTER PREPARATIONS FOR PLANTING HAVE BEEN COMPLETED. INSTALL PLANT MATERIALS IMMEDIATELY. PROTECT BARK, BRANCHES AND ROOT SYSTEMS DURING HANDLING. IF PLANTING IS DELAYED, PROTECT PLANT MATERIALS FORM DAMAGE AND WATER THOROUGHLY AS NEEDED. HEEL-IN BALLED AND BURLAPPED PLANT MATERIALS AND KEEP CONTAINER GROWN STOCK IN CONTAINER UNTIL TIME OF PLANTING.
9. DO NOT INSTALL PLANT MATERIAL WHEN AMBIENT TEMPERATURES MAY DROP BELOW 35° F (2° C) OR RISE ABOVE 90° F (32° C). DO NOT INSTALL PLANT MATERIAL WHEN WIND VELOCITY EXCEEDS 30 mph (48k/hr).
10. PLACE PLANT VERTICAL AND ORIENT FOR BEST APPEARANCE. REMOVE SYNTHETIC CONTAINERS, BURLAP, ROPES AND WIRES FROM ROOT BALLS. CUT AND FOLD DOWN NATURAL BURLAP MATERIAL FROM THE TOP OF THE ROOT BALL. SATURATE SOIL WITH WATER WHEN THE PIT OF BED IS HALF FULL OF PLANTING SOIL AND AGAIN WHEN FULL.
11. AFTER PLANTING AND BEFORE APPLICATION OF MULCH, TREAT GROUND WITH RONSTAR-G OR APPROVED EQUAL.
12. ALL TREES AND SHRUBS SHALL RECEIVE SAUCERS AND MULCH. MULCH BED SHALL BE A MINIMUM OF 3' FROM THE ROOT BALL OF SHRUBS AND 5' FROM THE ROOT BALL OF TREES.PLANT BEDS SHALL BE MULCHED AS A CONTINUOUS MASS AND BEDLINES SHALL HAVE CLEAN, SHARP EDGES CUT WITH SPADE.
13. SHREDDED PINE BARK MULCH SHALL BE APPLIED TO ALL PLANTING BEDS TO A MINIMUM DEPTH OF FOUR (4) INCHES. KEEP MULCH AWAY FROM TREE TRUNKS AND SHRUBS. SOIL SHALL NOT BE LEFT EXPOSED WITHIN ANY PLANTING PITS OR BEDS. MULCH BED SHALL BE WEED FREE AND CONFORM TO THE SPECIFIED DEPTH AT THE TIME OF FINAL INSPECTION.
14. AFTER ACCEPTANCE AT THE TIME OF FINAL INSTALLATION INSPECTION, ALL PLANTS SHALL BE WARRANTED FOR ONE YEAR. PLANT MATERIALS SHALL BE ALIVE AND IN SATISFACTORY GROWTH AT THE END OF THE WARRANTY PERIOD. ONE THOROUGH WEEDING AND REPLENISHING OF MULCH (MINIMUM 2") SHALL BE REQUIRED IMMEDIATELY PRIOR TO THE INSPECTION AT THE END OF THE WARRANTY PERIOD.
15. AT THE END OF THE WARRANTY PERIOD, H2GO STAFF WILL INSPECT THE PROJECT SITE. ANY PLANT THAT IS DEAD, MISSING OR NOT IN SATISFACTORY GROWTH SHALL BE REMOVED FROM THE SITE AND REPLACED. REPLACEMENT PLANTS SHALL BE OF THE SAME SIZE AND SPECIES AS ORIGINALLY SPECIFIED.

REVISIONS

THE WOOTEN COMPANY
120 North Boylan Avenue Raleigh, Nc 27603-1423
919.828.0531 Fax 919.834.3589
License Number: F-0113

BRUNSWICK REGIONAL WATER AND SEWER H2GO
BRUNSWICK COUNTY NORTH CAROLINA
CONTRACT No. 4
REVERSE OSMOSIS WATER TREATMENT PLANT
LANDSCAPE SITE PLAN

NORTH CAROLINA PROFESSIONAL SEAL 2531 ENGINEER CHARLES W. DAVIS
7-JUNE-20

DESIGNED BY: CWD
DRAWN BY: PMD/EML
CHECKED BY: CWD
PROJECT NO.: 3081-AB
DATE: JUNE 7, 2020
SCALE: AS NOTED

SHEET 17 OF 181

L100

Default
Print2PDFx.plt
29.9999 * / in.
pdonaghy
6/4/2020 11:59:57 AM
T:\Projects\Brunswick_Regional_W&S_H2GO-3081\AB-Water_Supply&Treatment_Plant\Sheets\WTP\L100-LANDSCAPING.dgn

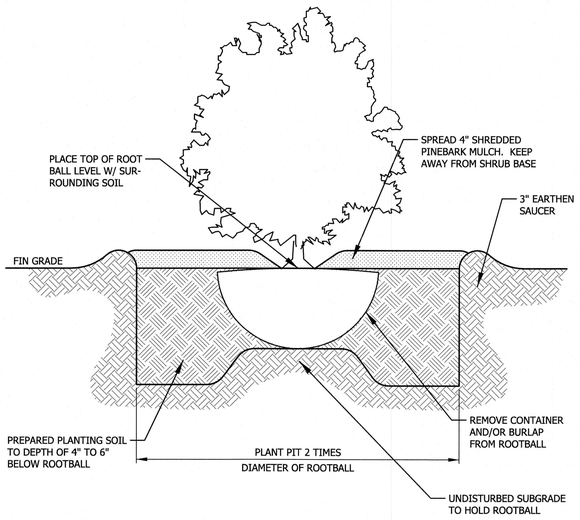

(ALL PLANTS LESS THAN 6' TALL)

1 / L101 SHRUB PLANTING DETAIL

NOT TO SCALE

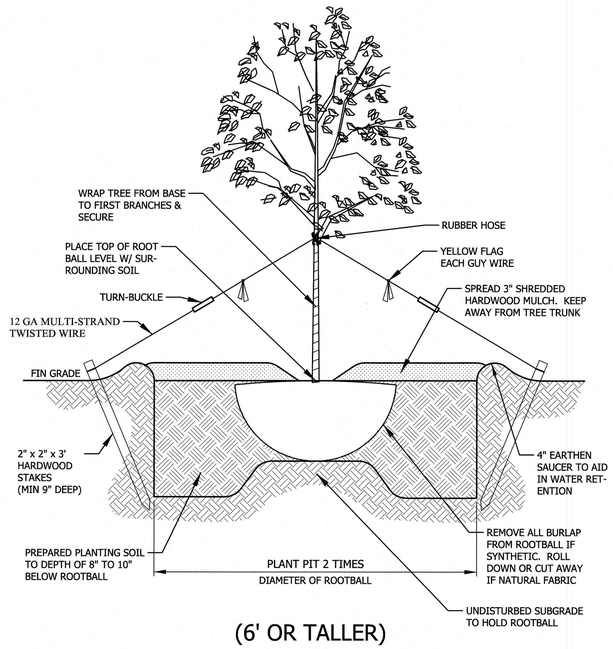

(6' OR TALLER)

2 / L101 TREE PLANTING DETAIL

NOT TO SCALE

REVISIONS

THE WOOTEN COMPANY
120 North Boylan Avenue Raleigh, NC 27603-1423
919.828.0531 fax 919.834.3589
License Number: F-0115

BRUNSWICK REGIONAL WATER AND SEWER H2GO
BRUNSWICK COUNTY NORTH CAROLINA

CONTRACT No. 4

REVERSE OSMOSIS WATER TREATMENT PLANT

LANDSCAPE DETAILS

NORTH CAROLINA PROFESSIONAL SEAL 12531 ENGINEER CHARLES W. DAVIS

DESIGNED BY: CWD
DRAWN BY: PMD/EML
CHECKED BY: CWD
PROJECT NO.: 3081-AB
DATE: JUNE 7, 2020
SCALE: AS NOTED

SHEET 18 OF 181

L101

Default
Print2PDFx.plt
29.9999 ' / in.
pdonaghy
6/4/2020 12:00:22 PM
T:\Projects\BrunswickRegional_W&S_H2GO-3081\AB-Water_Supply&Treatment_Plant\Sheets\WTP\L101-LANDSCAPING.dgn

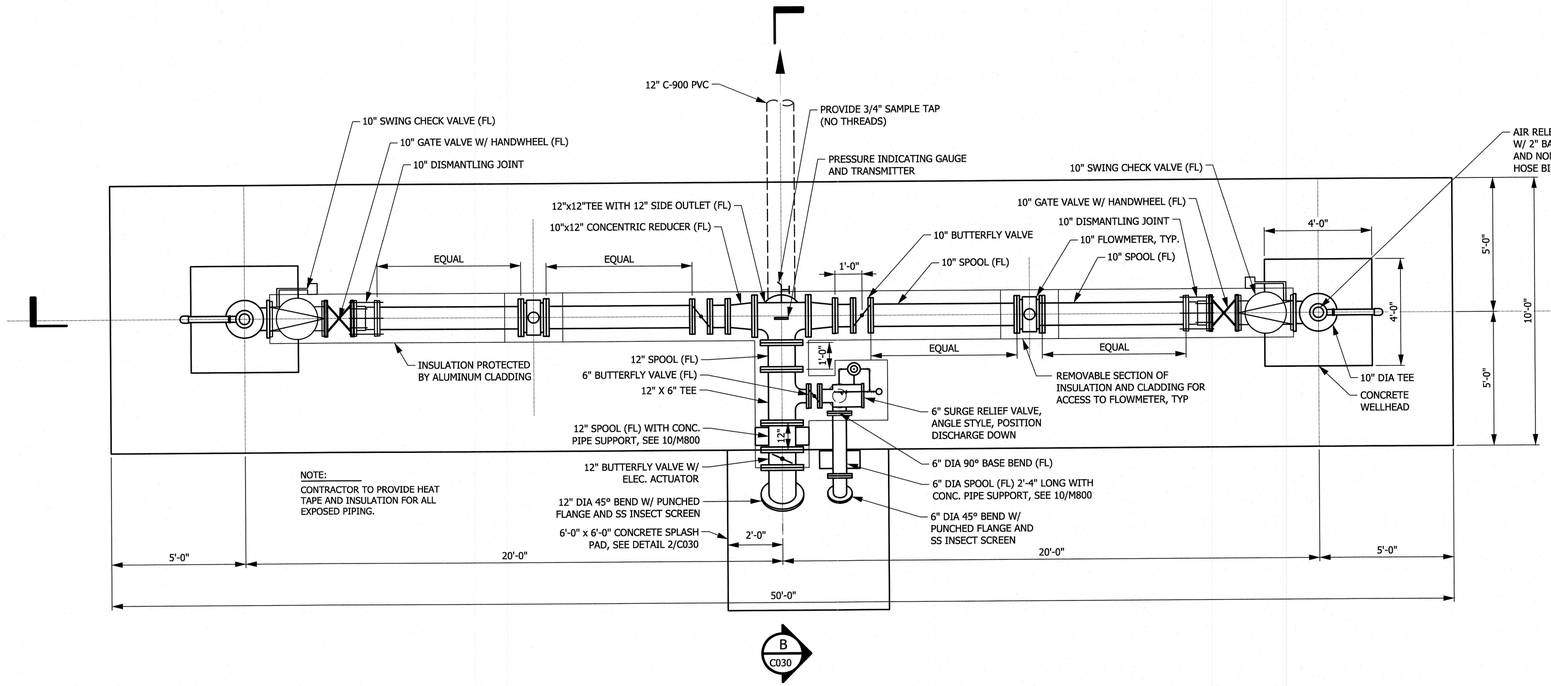

PLAN
3/8"=1'-0"

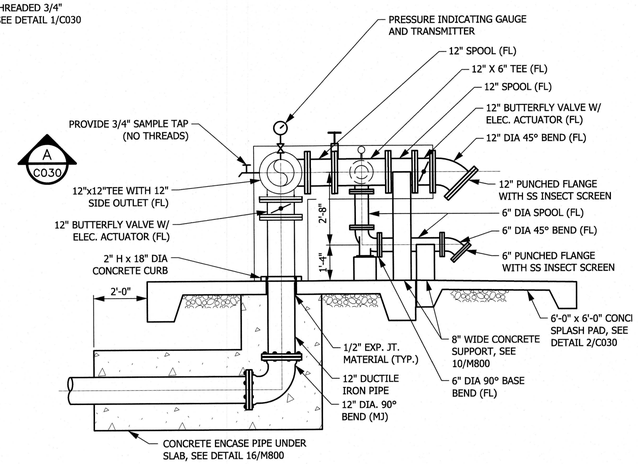

B C030 SECTION B-B
3/8"=1'-0"

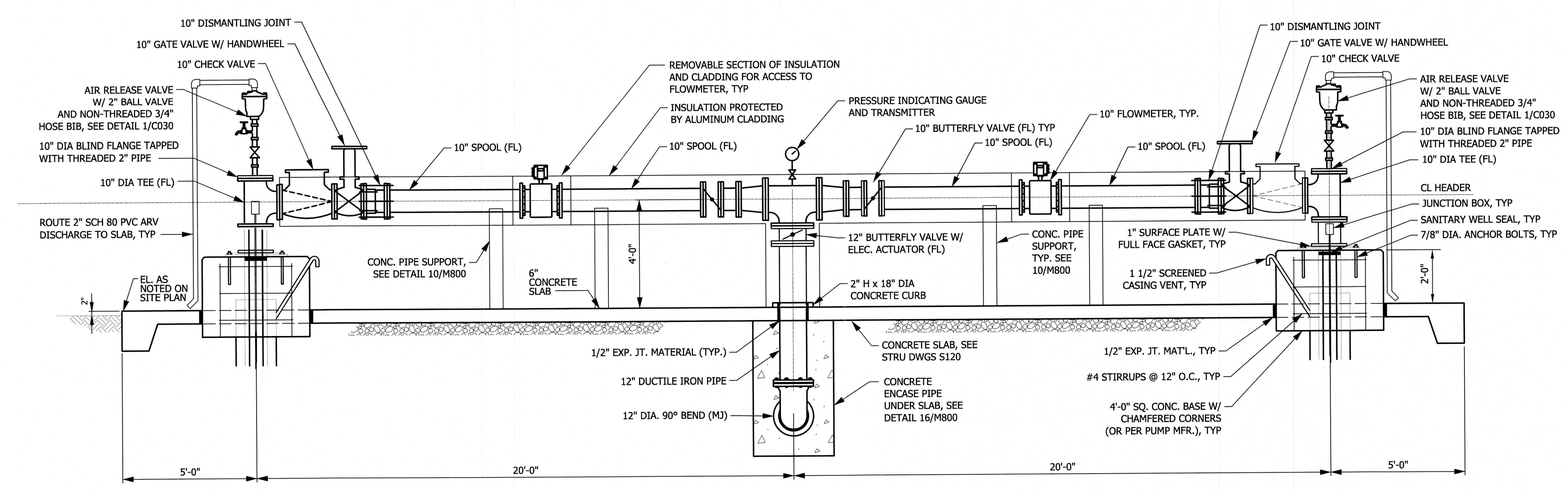

A C030 SECTION A-A
3/8"=1'-0"

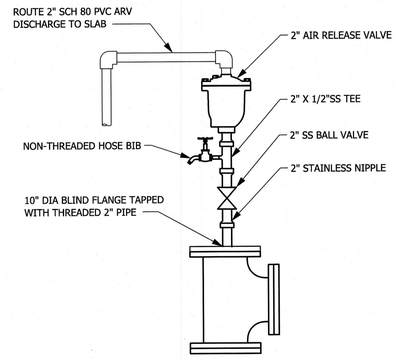

1 C030 AIR RELEASE VALVE
NOT TO SCALE

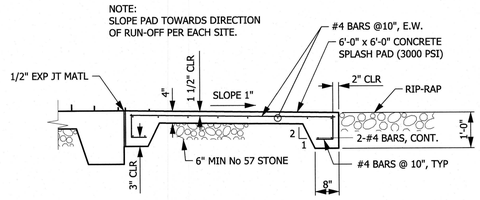

2 C030 SPLASH PAD
1/2"=1'-0"

1/2"=1'-0" 12" 0 1' 3'

3/8"=1'-0" 12" 0 1' 2' 4'

REVISIONS

THE WOOTEN COMPANY
120 North Boylan Avenue Raleigh, NC 27603-1423
919.828.0531 fax 919.834.3589
License Number: F-0115

BRUNSWICK REGIONAL WATER AND SEWER H2GO
BRUNSWICK COUNTY NORTH CAROLINA
CONTRACT No. 4
REVERSE OSMOSIS WATER TREATMENT PLANT
WELL HEAD PLAN
SECTIONS AND DETAILS

NORTH CAROLINA PROFESSIONAL SEAL 22531 ENGINEER CHARLES W. DAVIS

DESIGNED BY: CWD
DRAWN BY: EML/PMD
CHECKED BY: CWD
PROJECT NO.: 3081-AB
DATE: JUNE 7, 2020
SCALE: AS SHOWN

SHEET 19 OF 181

C030

Default

Print2PDFx.plt
2.6667 ' / in.
pdonaghy 12:01:49 PM
6/4/2020
T:\Projects\Brunswick_Regional_W&S_H2GO-3081\AB-Water_Supply&Treatment_Plant\Sheets\Wells\C030_WELLHEAD.dgn

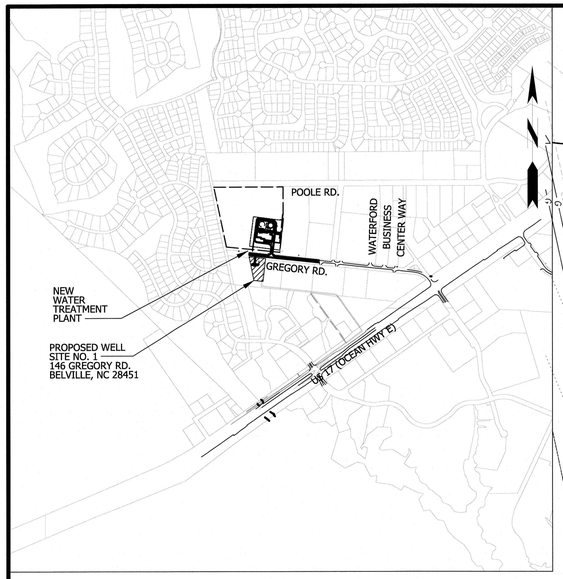

LOCATION MAP
SCALE: 1"=1000'

GENERAL CONSTRUCTION NOTES

1. CONTRACTOR SHALL PROVIDE SITE GRADING AS INDICATED TO PRODUCE FINISHED GRADE ELEVATIONS SHOWN.
2. ALL PIPING SHALL BE BURIED WITH 3'-0" MINIMUM COVER UNLESS NOTED OTHERWISE. SEE SPECIFICATIONS FOR PIPE BEDDING AND TRENCHING REQUIREMENTS.

EROSION CONTROL REQUIREMENTS

1. CLEAR SITE ONLY AS NECESSARY TO INSTALL EROSION CONTROL DEVICES AS INDICATED ON THE DRAWINGS.
2. INSTALL TEMPORARY EROSION CONTROL DEVICES AS SHOWN ON THE PLANS.
3. INSTALL SILT FENCE OVER AND AROUND TOP OF EXISTING STORM DRAIN INLETS & PIPES IN AND ADJACENT TO DISTURBED AREAS, AND AROUND THE LOW SIDE OF ALL STOCKPILES.
4. THE SEDIMENTATION POLLUTION CONTROL ACT WAS AMENDED IN 2006 TO REQUIRE THAT PERSONS RESPONSIBLE FOR LAND DISTURBING ACTIVITIES INSPECT A PROJECT AFTER EACH PHASE OF THE PROJECT TO MAKE SURE THAT THE APPROVED EROSION AND SEDIMENTATION CONTROL PLAN IS BEING FOLLOWED. RULES DETAILING THE DOCUMENTATION OF THESE INSPECTIONS TOOK EFFECT OCTOBER 1, 2010. THE SELF-INSPECTION PROGRAM IS SEPARATE FROM THE WEEKLY SELF-MONITORING OF THE NPDES STORMWATER PERMIT FOR CONSTRUCTION ACTIVITIES. THE FOCUS OF THE SELF-INSPECTION REPORT IS THE INSTALLATION AND MAINTENANCE OF EROSION AND SEDIMENTATION CONTROL MEASURES ACCORDING TO THE APPROVED PLAN. THE INSPECTION SHOULD BE CONDUCTED AFTER EACH PHASE OF THE PROJECT, AND CONTINUED UNTIL PERMANENT GROUND COVER IS ESTABLISHED. SELF-INSPECTION REPORTS ARE AVAILABLE ON THE LAND QUALITY WEB SITE:

   http://portal.ncdenr.org/web/lr/erosion THE CONTRACTOR SHALL ENSURE THAT DOCUMENTATION OF INSPECTIONS WILL BE RECORDED ON A SINGLE COPY OF THE APPROVED EROSION AND SEDIMENTATION CONTROL PLAN. THIS PLAN AND ANY INSPECTION REPORTS SHALL BE MADE AVAILABLE ON THE PROJECT SITE.
5. ANY SEEPAGE PUMPED OUT OF BORE PITS OR TRENCHES SHALL BE PUMPED THROUGH A DEWATERING BAG AS MANUFACTURED BY DANDY OR EQUAL.
6. TEMPORARY CHECK DAMS SHALL BE ESTABLISHED AT THE LOW END OF THE WORK AS THE JOB PROGRESSES.
7. NOTIFY ENGINEER FOR SITE INSPECTION PRIOR TO COMMENCING MAIN CONSTRUCTION OPERATIONS.
8. ONCE EROSION CONTROL DEVICES ARE APPROVED, BEGIN CONSTRUCTION OPERATIONS.
9. MAINTAIN EROSION CONTROL DEVICES AS NECESSARY DURING CONSTRUCTION. INSPECT DEVICES AFTER EVERY RAINFALL EVENT AND CLEANOUT TRAPS AND/OR CHECK DAMS WHEN HALF FULL.
10. AS CONSTRUCTION PROGRESSES INSTALL ADDITIONAL EROSION CONTROL DEVICES AS INDICATED ON THE DRAWINGS, CALLED FOR IN THE SPECIFICATIONS, OR AS DIRECTED BY THE ENGINEER.
11. ESTABLISH GROUND COVER (TEMPORARY OR PERMANENT) ON EXPOSED SLOPES STEEPER THAN 3:1 WITHIN 7 CALENDAR DAYS FOLLOWING COMPLETION OF ANY PHASE OF GRADING. ESTABLISH A PERMANENT GROUNDCOVER FOR ALL OTHER DISTURBED AREAS WITHIN 14 CALENDAR DAYS FROM THE LAST LAND DISTURBING ACTIVITY.
12. AFTER SITE IS STABILIZED, REQUEST AN INSPECTION BY THE ENGINEER. UPON APPROVAL OF SITE STABILIZATION, REMOVE TEMPORARY EROSION CONTROL DEVICES, DRESS OUT AREA AND SEED AND MULCH. PERMANENT EROSION CONTROL DEVICES SHALL BE INSTALLED AND APPROVED BY ENGINEER.
13. ALL STOCKPILES SHALL HAVE A MAXIMUM SIDESLOPE OF 2:1 AND SHALL NOT EXCEED A MAXIMUM HEIGHT OF 10 FEET.
14. 100 YEAR FLOOD ELEVATION IS 16.4 PER FIRM MAP PANEL 37202197700J REVISED JUNE 2, 2006.

WELL CONSTRUCTION NOTES

1. REFER TO SPECIFICATIONS SECTION 02526 WATER SUPPLY WELL FOR DETAILED WELL CONSTRUCTION REQUIREMENTS.
2. WELL CONSTRUCTION SHALL BE IN STRICT ACCORDANCE WITH NC ADMINISTRATIVE CODE, 15A NCAC 02C AND 18C, AND OTHER FEDERAL, STATE AND LOCAL REQUIREMENTS AS APPLICABLE.

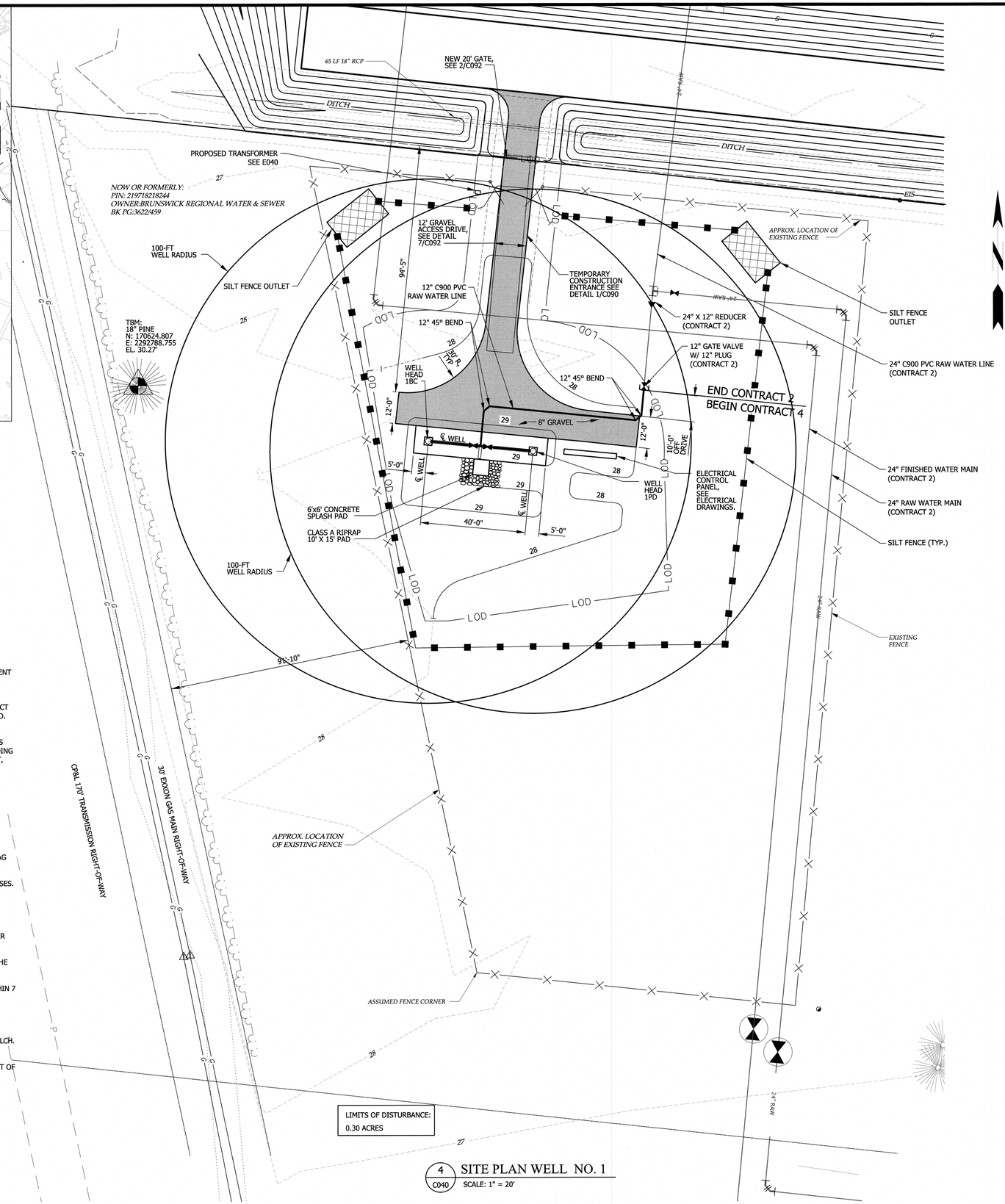

4 C040 SITE PLAN WELL NO. 1
SCALE: 1" = 20'

NOTE:
CONTRACTOR SHALL BE RESPONSIBLE FOR MAKING FINAL CONNECTION TO CONTRACT 2 LINEWORK.

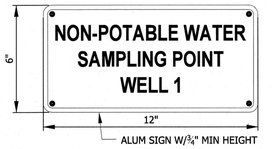

ALUM SIGN W/¾" MIN HEIGHT LETTERING. PAINT BACKGROUND RED, BORDER AND LETTERING WHITE

NOTES:
1. MOUNT SIGN TO ALUM CLADDING BELOW SAMPLING HOSE BIBB W/ 4-3/4"x1/8" SHEET METAL SCREWS.

1 C040 HOSE BIBB SIGN DETAIL
SCALE: 3" = 1'-0"

PRODUCTION WELL
N 170,599.61
E 2,292,938.89
LAT 34°12'53.2944",
LONG -078°01'51.9377"
WELL 1PD (01P)

PRODUCTION WELL
N 170,603.50
E 2,292,899.08
LAT 34°12'53.3367"
LONG -078°01'52.4113"
WELL 1BC (01B)

2 C040 COORDINATES OF WELLS
NO SCALE



ALUM SIGN W/ 2" MIN HEIGHT LETTERING. PAINT BACKGROUND BLUE, BORDER AND LETTERING WHITE

NOTES:
1. MOUNT SIGN TO FENCE W/ 4-3/4"x1/8" SHEET METAL SCREWS.

3 C040 WELL PLACARD
NO SCALE

REVISIONS

THE WOOTEN COMPANY
120 North Boylan Avenue Raleigh NC 27603-1423
919.828.0531 fax 919.834.3589
License Number: F-0115

BRUNSWICK REGIONAL WATER AND SEWER H2GO
BRUNSWICK COUNTY NORTH CAROLINA
CONTRACT No. 4
REVERSE OSMOSIS WATER TREATMENT PLANT
WELL SITE NO. 1

NORTH CAROLINA PROFESSIONAL SEAL 20031 ENGINEER CHARLES W. DAVIS
7-JUNE-20

DESIGNED BY: CWD
DRAWN BY: EML/PMD
CHECKED BY: CWD
PROJECT NO.: 3081-AB
DATE: JUNE 7, 2020
SCALE: AS NOTED

SHEET 20 OF 179

C040

Default
Print2PDFx.plt
20.0000 " / in.
pdonaghy
9:45:08 AM
6/5/2020
T:\Projects\Brunswick_Regional_W&S_H2GO-3081\AB-Water_Supply&Treatment_Plant\Sheets\Wells\C040_WELLSITE1.dgn

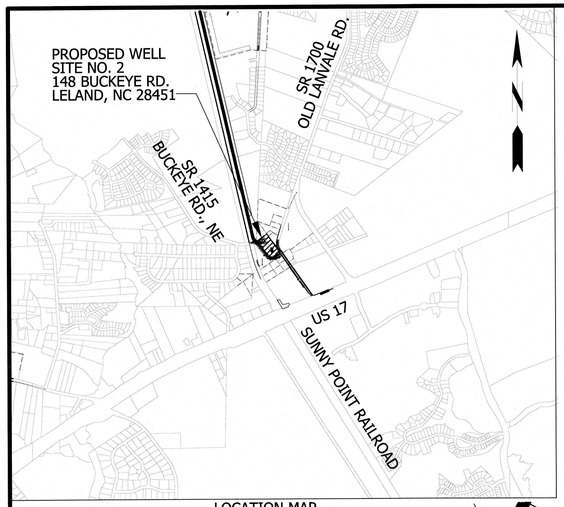

LOCATION MAP
SCALE: 1"=1000'

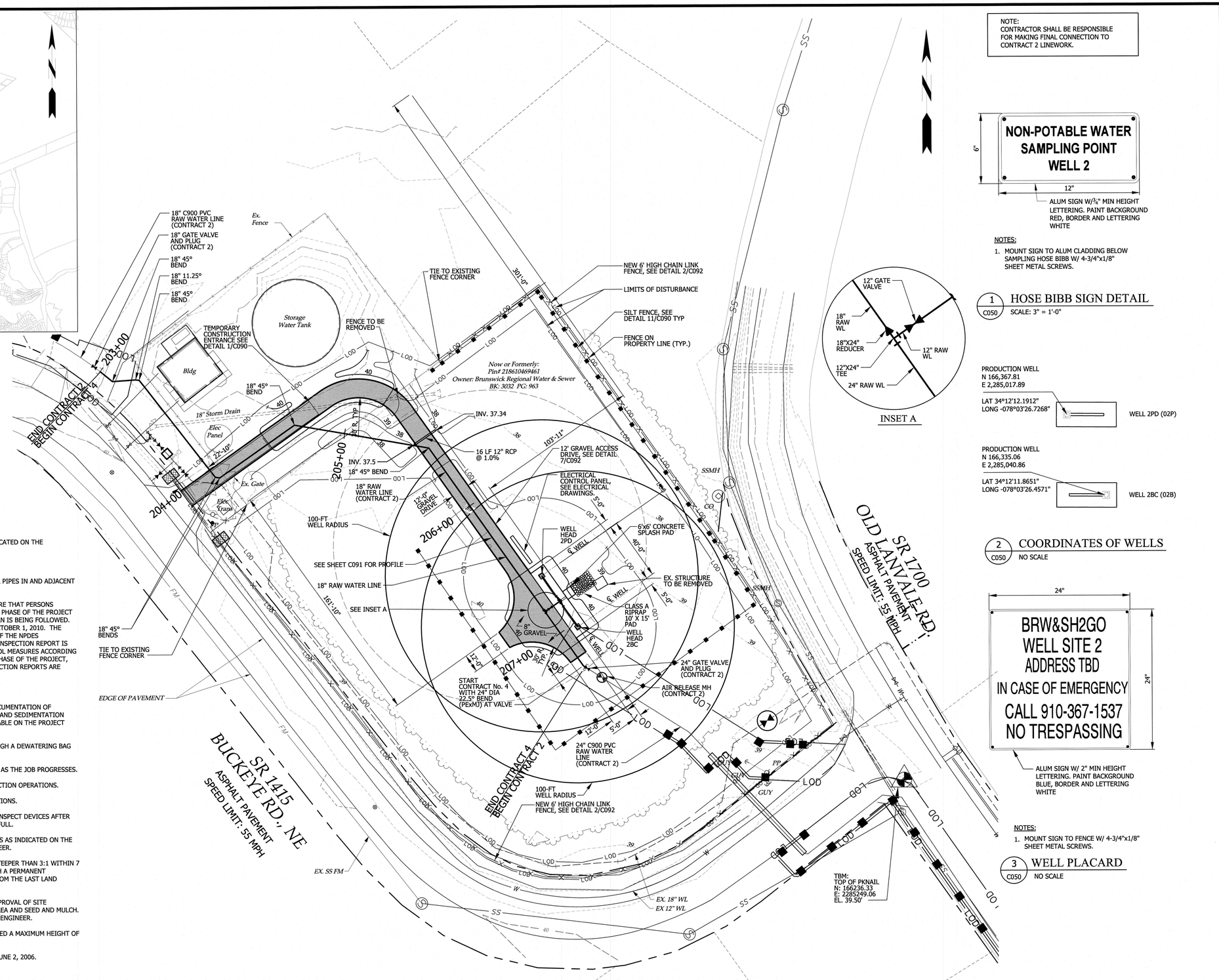

LIMITS OF DISTURBANCE:
0.57 ACRES

4 C050 SITE PLAN WELL NO. 2
SCALE: 1" = 30'

30' 15' 0 30' 60' 90'
SCALE: 1" = 30'

NOTE:
CONTRACTOR SHALL BE RESPONSIBLE FOR MAKING FINAL CONNECTION TO CONTRACT 2 LINEWORK.

ALUM SIGN W/¾" MIN HEIGHT LETTERING. PAINT BACKGROUND RED, BORDER AND LETTERING WHITE

NOTES:
1. MOUNT SIGN TO ALUM CLADDING BELOW SAMPLING HOSE BIBB W/ 4-3/4"x1/8" SHEET METAL SCREWS.

INSET A

1 C050 HOSE BIBB SIGN DETAIL
SCALE: 3" = 1'-0"

PRODUCTION WELL
N 166,367.81
E 2,285,017.89
LAT 34°12'12.1912"
LONG -078°03'26.7268"
WELL 2PD (02P)

PRODUCTION WELL
N 166,335.06
E 2,285,040.86
LAT 34°12'11.8651"
LONG -078°03'26.4571"
WELL 2BC (02B)

2 C050 COORDINATES OF WELLS
NO SCALE

ALUM SIGN W/ 2" MIN HEIGHT LETTERING. PAINT BACKGROUND BLUE, BORDER AND LETTERING WHITE

NOTES:
1. MOUNT SIGN TO FENCE W/ 4-3/4"x1/8" SHEET METAL SCREWS.

3 C050 WELL PLACARD
NO SCALE

GENERAL CONSTRUCTION NOTES

1. CONTRACTOR SHALL PROVIDE SITE GRADING AS INDICATED TO PRODUCE FINISHED GRADE ELEVATIONS SHOWN.
2. ALL PIPING SHALL BE BURIED WITH 3'-0" MINIMUM COVER UNLESS NOTED OTHERWISE. SEE SPECIFICATIONS FOR PIPE BEDDING AND TRENCHING REQUIREMENTS.

EROSION CONTROL REQUIREMENTS

1. CLEAR SITE ONLY AS NECESSARY TO INSTALL EROSION CONTROL DEVICES AS INDICATED ON THE DRAWINGS.
2. INSTALL TEMPORARY EROSION CONTROL DEVICES AS SHOWN ON THE PLANS.
3. INSTALL SILT FENCE OVER AND AROUND TOP OF EXISTING STORM DRAIN INLETS & PIPES IN AND ADJACENT TO DISTURBED AREAS, AND AROUND THE LOW SIDE OF ALL STOCKPILES.
4. THE SEDIMENTATION POLLUTION CONTROL ACT WAS AMENDED IN 2006 TO REQUIRE THAT PERSONS RESPONSIBLE FOR LAND DISTURBING ACTIVITIES INSPECT A PROJECT AFTER EACH PHASE OF THE PROJECT TO MAKE SURE THAT THE APPROVED EROSION AND SEDIMENTATION CONTROL PLAN IS BEING FOLLOWED. RULES DETAILING THE DOCUMENTATION OF THESE INSPECTIONS TOOK EFFECT OCTOBER 1, 2010. THE SELF-INSPECTION PROGRAM IS SEPARATE FROM THE WEEKLY SELF-MONITORING OF THE NPDES STORMWATER PERMIT FOR CONSTRUCTION ACTIVITIES. THE FOCUS OF THE SELF-INSPECTION REPORT IS THE INSTALLATION AND MAINTENANCE OF EROSION AND SEDIMENTATION CONTROL MEASURES ACCORDING TO THE APPROVED PLAN. THE INSPECTION SHOULD BE CONDUCTED AFTER EACH PHASE OF THE PROJECT, AND CONTINUED UNTIL PERMANENT GROUND COVER IS ESTABLISHED. SELF-INSPECTION REPORTS ARE AVAILABLE ON THE LAND QUALITY WEB SITE:

   http://portal.ncdenr.org/web/lr/erosion THE CONTRACTOR SHALL ENSURE THAT DOCUMENTATION OF INSPECTIONS WILL BE RECORDED ON A SINGLE COPY OF THE APPROVED EROSION AND SEDIMENTATION CONTROL PLAN. THIS PLAN AND ANY INSPECTION REPORTS SHALL BE MADE AVAILABLE ON THE PROJECT SITE.
5. ANY SEEPAGE PUMPED OUT OF BORE PITS OR TRENCHES SHALL BE PUMPED THROUGH A DEWATERING BAG AS MANUFACTURED BY DANDY OR EQUAL.
6. TEMPORARY CHECK DAMS SHALL BE ESTABLISHED AT THE LOW END OF THE WORK AS THE JOB PROGRESSES.
7. NOTIFY ENGINEER FOR SITE INSPECTION PRIOR TO COMMENCING MAIN CONSTRUCTION OPERATIONS.
8. ONCE EROSION CONTROL DEVICES ARE APPROVED, BEGIN CONSTRUCTION OPERATIONS.
9. MAINTAIN EROSION CONTROL DEVICES AS NECESSARY DURING CONSTRUCTION. INSPECT DEVICES AFTER EVERY RAINFALL EVENT AND CLEANOUT TRAPS AND/OR CHECK DAMS WHEN HALF FULL.
10. AS CONSTRUCTION PROGRESSES INSTALL ADDITIONAL EROSION CONTROL DEVICES AS INDICATED ON THE DRAWINGS, CALLED FOR IN THE SPECIFICATIONS, OR AS DIRECTED BY THE ENGINEER.
11. ESTABLISH GROUND COVER (TEMPORARY OR PERMANENT) ON EXPOSED SLOPES STEEPER THAN 3:1 WITHIN 7 CALENDAR DAYS FOLLOWING COMPLETION OF ANY PHASE OF GRADING. ESTABLISH A PERMANENT GROUNDCOVER FOR ALL OTHER DISTURBED AREAS WITHIN 14 CALENDAR DAYS FROM THE LAST LAND DISTURBING ACTIVITY.
12. AFTER SITE IS STABILIZED, REQUEST AN INSPECTION BY THE ENGINEER. UPON APPROVAL OF SITE STABILIZATION, REMOVE TEMPORARY EROSION CONTROL DEVICES, DRESS OUT AREA AND SEED AND MULCH. PERMANENT EROSION CONTROL DEVICES SHALL BE INSTALLED AND APPROVED BY ENGINEER.
13. ALL STOCKPILES SHALL HAVE A MAXIMUM SIDESLOPE OF 2:1 AND SHALL NOT EXCEED A MAXIMUM HEIGHT OF 10 FEET.
14. 100 YEAR FLOOD ELEVATION IS 39.0 PER FIRM MAP PANEL 3720218600J REVISED JUNE 2, 2006.

WELL CONSTRUCTION NOTES

1. REFER TO SPECIFICATIONS SECTION 02526 WATER SUPPLY WELL FOR DETAILED WELL CONSTRUCTION REQUIREMENTS.
2. WELL CONSTRUCTION SHALL BE IN STRICT ACCORDANCE WITH NC ADMINISTRATIVE CODE, 15A NCAC 02C AND 18C, AND OTHER FEDERAL, STATE AND LOCAL REQUIREMENTS AS APPLICABLE.

REVISIONS

THE WOOTEN COMPANY
120 North Boylan Avenue Raleigh, NC 27603-1423
919.828.0531 fax 919.834.3589
License Number: F-0115

BRUNSWICK REGIONAL WATER AND SEWER H2GO
BRUNSWICK COUNTY NORTH CAROLINA
CONTRACT No. 4
REVERSE OSMOSIS WATER TREATMENT PLANT
WELL SITE NO. 2

NORTH CAROLINA PROFESSIONAL SEAL 22531 ENGINEER CHARLES W. DAVIS
7-JUNE-20

DESIGNED BY: CWD
DRAWN BY: EML/PMD
CHECKED BY: CWD
PROJECT NO.: 3081-AB
DATE: JUNE 7, 2020
SCALE: AS NOTED

SHEET 21 OF 181

C050

Default
Print2PDFx.plt
29.9999 / In.
pdonaghy
6/5/2020 9:46:28 AM
T:\Projects\Brunswick_Regional_W&S_H2CO-3081\AB-Water_Supply&Treatment_Plant\Sheets\Wells\C050_WELLSITE2.dgn

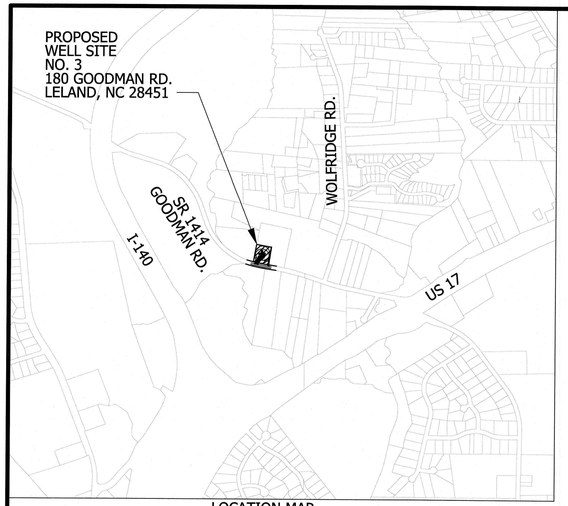

LOCATION MAP
SCALE: 1"=1000'

NOTE:
CONTRACTOR SHALL BE RESPONSIBLE FOR MAKING FINAL CONNECTION TO CONTRACT No. 2 LINEWORK

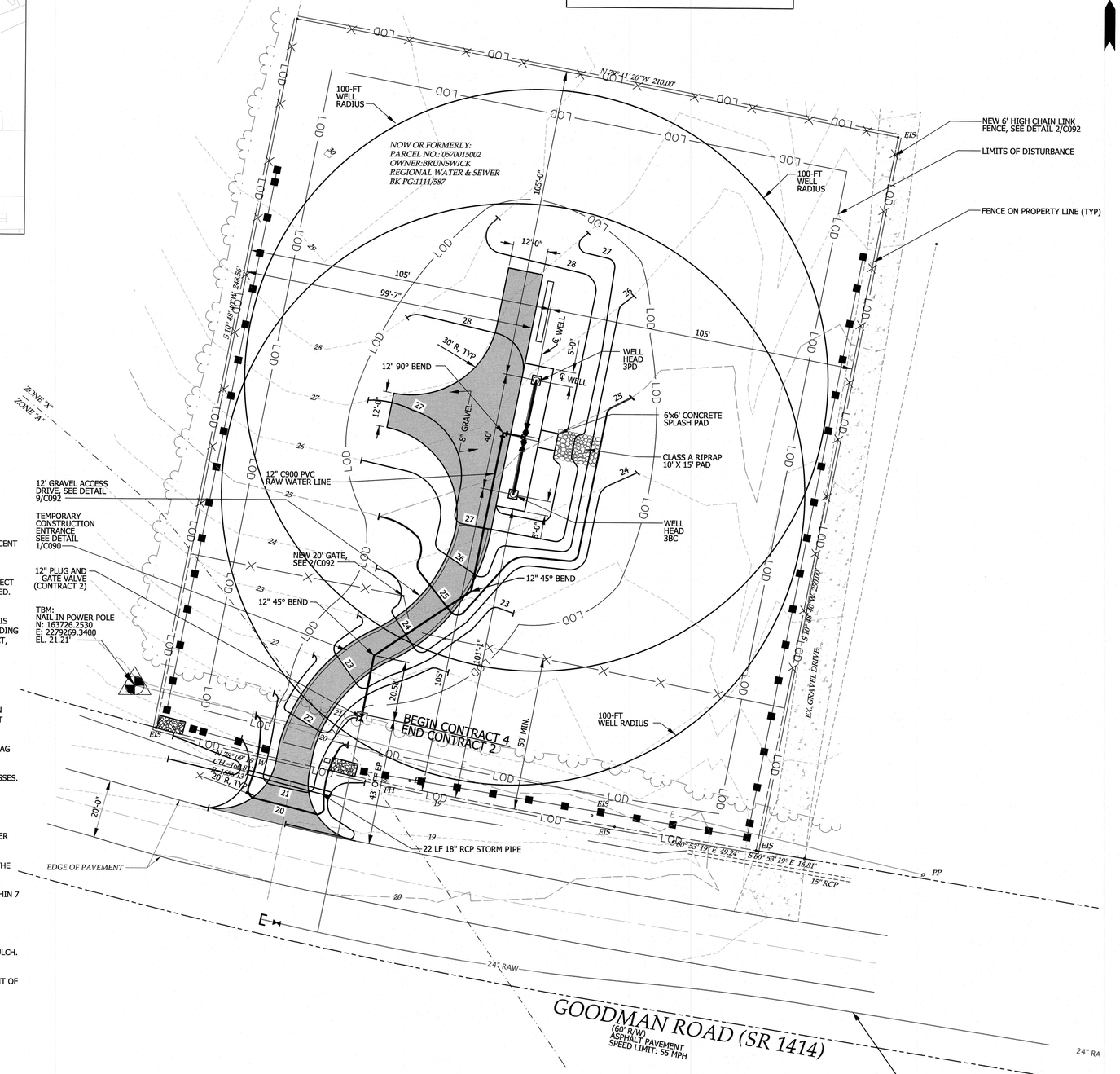

4 C060 SITE PLAN WELL NO. 3
SCALE: 1" = 20'

LIMITS OF DISTURBANCE:
0.62 ACRES

20' 10' 0 20' 40' 60'
SCALE: 1" = 20'

GENERAL CONSTRUCTION NOTES

1. CONTRACTOR SHALL PROVIDE SITE GRADING AS INDICATED TO PRODUCE FINISHED GRADE ELEVATIONS SHOWN.
2. ALL PIPING SHALL BE BURIED WITH 3'-0" MINIMUM COVER UNLESS NOTED OTHERWISE. SEE SPECIFICATIONS FOR PIPE BEDDING AND TRENCHING REQUIREMENTS.

EROSION CONTROL REQUIREMENTS

1. CLEAR SITE ONLY AS NECESSARY TO INSTALL EROSION CONTROL DEVICES AS INDICATED ON THE DRAWINGS.
2. INSTALL TEMPORARY EROSION CONTROL DEVICES AS SHOWN ON THE PLANS.
3. INSTALL SILT FENCE OVER AND AROUND TOP OF EXISTING STORM DRAIN INLETS & PIPES IN AND ADJACENT TO DISTURBED AREAS, AND AROUND THE LOW SIDE OF ALL STOCKPILES.
4. THE SEDIMENTATION POLLUTION CONTROL ACT WAS AMENDED IN 2006 TO REQUIRE THAT PERSONS RESPONSIBLE FOR LAND DISTURBING ACTIVITIES INSPECT A PROJECT AFTER EACH PHASE OF THE PROJECT TO MAKE SURE THAT THE APPROVED EROSION AND SEDIMENTATION CONTROL PLAN IS BEING FOLLOWED. RULES DETAILING THE DOCUMENTATION OF THESE INSPECTIONS TOOK EFFECT OCTOBER 1, 2010. THE SELF-INSPECTION PROGRAM IS SEPARATE FROM THE WEEKLY SELF-MONITORING OF THE NPDES STORMWATER PERMIT FOR CONSTRUCTION ACTIVITIES. THE FOCUS OF THE SELF-INSPECTION REPORT IS THE INSTALLATION AND MAINTENANCE OF EROSION AND SEDIMENTATION CONTROL MEASURES ACCORDING TO THE APPROVED PLAN. THE INSPECTION SHOULD BE CONDUCTED AFTER EACH PHASE OF THE PROJECT, AND CONTINUED UNTIL PERMANENT GROUND COVER IS ESTABLISHED. SELF-INSPECTION REPORTS ARE AVAILABLE ON THE LAND QUALITY WEB SITE:

   http://portal.ncdenr.org/web/lr/erosion THE CONTRACTOR SHALL ENSURE THAT DOCUMENTATION OF INSPECTIONS WILL BE RECORDED ON A SINGLE COPY OF THE APPROVED EROSION AND SEDIMENTATION CONTROL PLAN. THIS PLAN AND ANY INSPECTION REPORTS SHALL BE MADE AVAILABLE ON THE PROJECT SITE.
5. ANY SEEPAGE PUMPED OUT OF BORE PITS OR TRENCHES SHALL BE PUMPED THROUGH A DEWATERING BAG AS MANUFACTURED BY DANDY OR EQUAL.
6. TEMPORARY CHECK DAMS SHALL BE ESTABLISHED AT THE LOW END OF THE WORK AS THE JOB PROGRESSES.
7. NOTIFY ENGINEER FOR SITE INSPECTION PRIOR TO COMMENCING MAIN CONSTRUCTION OPERATIONS.
8. ONCE EROSION CONTROL DEVICES ARE APPROVED, BEGIN CONSTRUCTION OPERATIONS.
9. MAINTAIN EROSION CONTROL DEVICES AS NECESSARY DURING CONSTRUCTION. INSPECT DEVICES AFTER EVERY RAINFALL EVENT AND CLEANOUT TRAPS AND/OR CHECK DAMS WHEN HALF FULL.
10. AS CONSTRUCTION PROGRESSES INSTALL ADDITIONAL EROSION CONTROL DEVICES AS INDICATED ON THE DRAWINGS, CALLED FOR IN THE SPECIFICATIONS, OR AS DIRECTED BY THE ENGINEER.
11. ESTABLISH GROUND COVER (TEMPORARY OR PERMANENT) ON EXPOSED SLOPES STEEPER THAN 3:1 WITHIN 7 CALENDAR DAYS FOLLOWING COMPLETION OF ANY PHASE OF GRADING. ESTABLISH A PERMANENT GROUNDCOVER FOR ALL OTHER DISTURBED AREAS WITHIN 14 CALENDAR DAYS FROM THE LAST LAND DISTURBING ACTIVITY.
12. AFTER SITE IS STABILIZED, REQUEST AN INSPECTION BY THE ENGINEER. UPON APPROVAL OF SITE STABILIZATION, REMOVE TEMPORARY EROSION CONTROL DEVICES, DRESS OUT AREA AND SEED AND MULCH. PERMANENT EROSION CONTROL DEVICES SHALL BE INSTALLED AND APPROVED BY ENGINEER.
13. ALL STOCKPILES SHALL HAVE A MAXIMUM SIDESLOPE OF 2:1 AND SHALL NOT EXCEED A MAXIMUM HEIGHT OF 10 FEET.
14. 100 YEAR FLOOD ELEVATION IS 18.4 PER FIRM MAP PANEL 3720166000J REVISED JUNE 2, 2006.

WELL CONSTRUCTION NOTES

1. REFER TO SPECIFICATIONS SECTION 02526 WATER SUPPLY WELL FOR DETAILED WELL CONSTRUCTION REQUIREMENTS.
2. WELL CONSTRUCTION SHALL BE IN STRICT ACCORDANCE WITH NC ADMINISTRATIVE CODE, 15A NCAC 02C AND 18C, AND OTHER FEDERAL, STATE AND LOCAL REQUIREMENTS AS APPLICABLE.

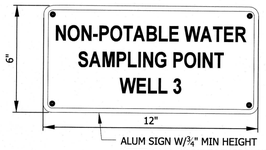

NOTES:
1. MOUNT SIGN TO ALUM CLADDING BELOW SAMPLING HOSE BIBB W/ 4-3/4"x1/8" SHEET METAL SCREWS.

1 C060 HOSE BIBB SIGN DETAIL
SCALE: 3" = 1'-0"

PRODUCTION WELL
N=163832.0195
E=2279406.2492
LAT 34°11'47.6310"
LONG -078°04'33.8131"
WELL 3PD (03P)

PRODUCTION WELL
N=163792.7600
E=2279398.5883
LAT 34°11'47.2434"
LONG -078°04'33.9087"
WELL 3BC (03B)

2 C060 COORDINATES OF WELLS
NO SCALE



NOTES:
1. MOUNT SIGN TO FENCE W/ 4-3/4"x1/8" SHEET METAL SCREWS.

3 C060 WELL PLACARD
NO SCALE

REVISIONS

THE WOOTEN COMPANY
120 North Boylan Avenue, Raleigh, NC 27603-1423
919.828.0531 | FAX 919.834.3089
License Number: F-0115

BRUNSWICK REGIONAL WATER AND SEWER H2GO
BRUNSWICK COUNTY NORTH CAROLINA
CONTRACT No. 4
REVERSE OSMOSIS WATER TREATMENT PLANT
WELL SITE 3

NORTH CAROLINA PROFESSIONAL SEAL 22531 ENGINEER CHARLES W. DAVIS
7-JUN-20

DESIGNED BY:	CWD
DRAWN BY:	EML/PMD
CHECKED BY:	CWD
PROJECT NO.:	3081-AB
DATE:	JUNE 7, 2020
SCALE:	AS NOTED

SHEET 22 OF 181

C060

Default
Print2PDFx.plt
20.0000 ' / in.
pdonaghy
6/5/2020 9:47:28 AM
T:\Projects\Brunswick_Regional_W&S_H2GO-3081\AB-Water_Supply&Treatment_Plant\Sheets\Wells\C060_WELLSITE 3.dgn

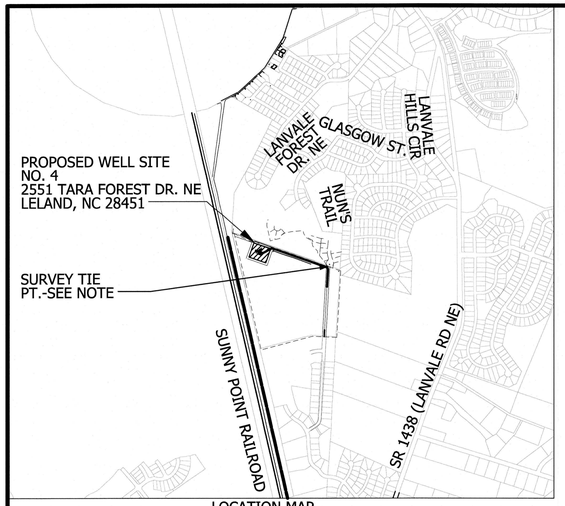

LOCATION MAP
SCALE: 1"=1000'

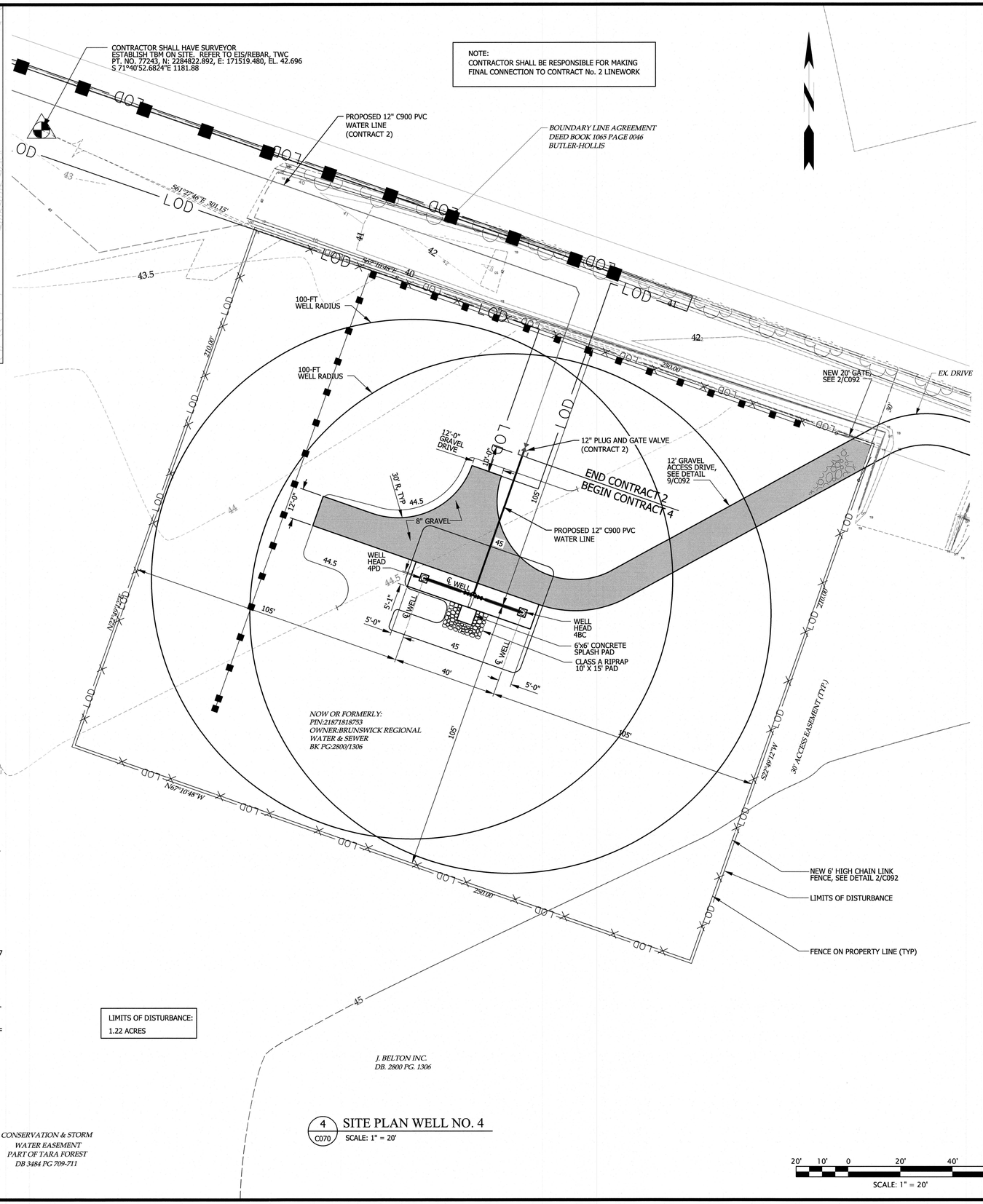

LIMITS OF DISTURBANCE:
1.22 ACRES

4 C070 SITE PLAN WELL NO. 4
SCALE: 1" = 20'

20' 10' 0 20' 40' 60'
SCALE: 1" = 20'

GENERAL CONSTRUCTION NOTES

1. CONTRACTOR SHALL PROVIDE SITE GRADING AS INDICATED TO PRODUCE FINISHED GRADE ELEVATIONS SHOWN.
2. ALL PIPING SHALL BE BURIED WITH 3'-0" MINIMUM COVER UNLESS NOTED OTHERWISE. SEE SPECIFICATIONS FOR PIPE BEDDING AND TRENCHING REQUIREMENTS.

EROSION CONTROL REQUIREMENTS

1. CLEAR SITE ONLY AS NECESSARY TO INSTALL EROSION CONTROL DEVICES AS INDICATED ON THE DRAWINGS.
2. INSTALL TEMPORARY EROSION CONTROL DEVICES AS SHOWN ON THE PLANS.
3. INSTALL SILT FENCE OVER AND AROUND TOP OF EXISTING STORM DRAIN INLETS & PIPES IN AND ADJACENT TO DISTURBED AREAS, AND AROUND THE LOW SIDE OF ALL STOCKPILES.
4. THE SEDIMENTATION POLLUTION CONTROL ACT WAS AMENDED IN 2006 TO REQUIRE THAT PERSONS RESPONSIBLE FOR LAND DISTURBING ACTIVITIES INSPECT A PROJECT AFTER EACH PHASE OF THE PROJECT TO MAKE SURE THAT THE APPROVED EROSION AND SEDIMENTATION CONTROL PLAN IS BEING FOLLOWED. RULES DETAILING THE DOCUMENTATION OF THESE INSPECTIONS TOOK EFFECT OCTOBER 1, 2010. THE SELF-INSPECTION PROGRAM IS SEPARATE FROM THE WEEKLY SELF-MONITORING OF THE NPDES STORMWATER PERMIT FOR CONSTRUCTION ACTIVITIES. THE FOCUS OF THE SELF-INSPECTION REPORT IS THE INSTALLATION AND MAINTENANCE OF EROSION AND SEDIMENTATION CONTROL MEASURES ACCORDING TO THE APPROVED PLAN. THE INSPECTION SHOULD BE CONDUCTED AFTER EACH PHASE OF THE PROJECT, AND CONTINUED UNTIL PERMANENT GROUND COVER IS ESTABLISHED. SELF-INSPECTION REPORTS ARE AVAILABLE ON THE LAND QUALITY WEB SITE:

http://portal.ncdenr.org/web/lr/erosion THE CONTRACTOR SHALL ENSURE THAT DOCUMENTATION OF INSPECTIONS WILL BE RECORDED ON A SINGLE COPY OF THE APPROVED EROSION AND SEDIMENTATION CONTROL PLAN. THIS PLAN AND ANY INSPECTION REPORTS SHALL BE MADE AVAILABLE ON THE PROJECT SITE.

5. ANY SEEPAGE PUMPED OUT OF BORE PITS OR TRENCHES SHALL BE PUMPED THROUGH A DEWATERING BAG AS MANUFACTURED BY DANDY OR EQUAL.
6. TEMPORARY CHECK DAMS SHALL BE ESTABLISHED AT THE LOW END OF THE WORK AS THE JOB PROGRESSES.
7. NOTIFY ENGINEER FOR SITE INSPECTION PRIOR TO COMMENCING MAIN CONSTRUCTION OPERATIONS.
8. ONCE EROSION CONTROL DEVICES ARE APPROVED, BEGIN CONSTRUCTION OPERATIONS.
9. MAINTAIN EROSION CONTROL DEVICES AS NECESSARY DURING CONSTRUCTION. INSPECT DEVICES AFTER EVERY RAINFALL EVENT AND CLEANOUT TRAPS AND/OR CHECK DAMS WHEN HALF FULL.
10. AS CONSTRUCTION PROGRESSES INSTALL ADDITIONAL EROSION CONTROL DEVICES AS INDICATED ON THE DRAWINGS, CALLED FOR IN THE SPECIFICATIONS, OR AS DIRECTED BY THE ENGINEER.
11. ESTABLISH GROUND COVER (TEMPORARY OR PERMANENT) ON EXPOSED SLOPES STEEPER THAN 3:1 WITHIN 7 CALENDAR DAYS FOLLOWING COMPLETION OF ANY PHASE OF GRADING. ESTABLISH A PERMANENT GROUNDCOVER FOR ALL OTHER DISTURBED AREAS WITHIN 14 CALENDAR DAYS FROM THE LAST LAND DISTURBING ACTIVITY.
12. AFTER SITE IS STABILIZED, REQUEST AN INSPECTION BY THE ENGINEER. UPON APPROVAL OF SITE STABILIZATION, REMOVE TEMPORARY EROSION CONTROL DEVICES, DRESS OUT AREA AND SEED AND MULCH. PERMANENT EROSION CONTROL DEVICES SHALL BE INSTALLED AND APPROVED BY ENGINEER.
13. ALL STOCKPILES SHALL HAVE A MAXIMUM SIDESLOPE OF 2:1 AND SHALL NOT EXCEED A MAXIMUM HEIGHT OF 10 FEET.
14. 100 YEAR FLOOD ELEVATION IS 29.3 PER FIRM MAP PANEL 3720218700J REVISED JUNE 2, 2006.

WELL CONSTRUCTION NOTES

1. REFER TO SPECIFICATIONS SECTION 02526 WATER SUPPLY WELL FOR DETAILED WELL CONSTRUCTION REQUIREMENTS.
2. WELL CONSTRUCTION SHALL BE IN STRICT ACCORDANCE WITH NC ADMINISTRATIVE CODE, 15A NCAC 02C AND 18C, AND OTHER FEDERAL, STATE AND LOCAL REQUIREMENTS AS APPLICABLE.

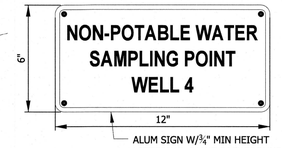

NOTES:
1. MOUNT SIGN TO ALUM CLADDING BELOW SAMPLING HOSE BIBB W/ 4-3/4"x1/8" SHEET METAL SCREWS.

1 C070 HOSE BIBB SIGN DETAIL
SCALE: 3" = 1'-0"

PRODUCTION WELL
N=171718.3021
E=2283847.6223
LAT 34°13'05.2237"
LONG -078°03'40.0561"
WELL 4PD (04P)

PRODUCTION WELL
N=171705.0527
E=2283885.3643
LAT 34°13'05.0891"
LONG -078°03'39.6082"
WELL 4BC (04B)

2 C070 COORDINATES OF WELLS
NO SCALE

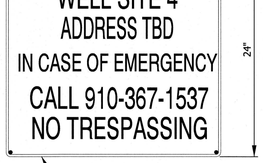

NOTES:
1. MOUNT SIGN TO FENCE W/ 4-3/4"x1/8" SHEET METAL SCREWS.

3 C070 WELL PLACARD
NO SCALE

REVISIONS

THE WOOTEN COMPANY
120 North Boylan Avenue Raleigh NC 27603-1423
919.833.3648 Fax 919.833.3369
License Number: C-0113

BRUNSWICK REGIONAL WATER AND SEWER H2GO
BRUNSWICK COUNTY NORTH CAROLINA
CONTRACT No. 4
REVERSE OSMOSIS WATER TREATMENT PLANT
WELL SITE 4

NORTH CAROLINA PROFESSIONAL SEAL 22531 ENGINEER CHARLES W. DAVIS
7-JUNE-20

DESIGNED BY: CWD
DRAWN BY: EML/PMD
CHECKED BY: CWD
PROJECT NO.: 3081-AB
DATE: JUNE 7, 2020
SCALE: AS NOTED

SHEET 23 OF 181

C070

Default

Prnt2PDFx.plt
20.0000 ' / in.
pdonaghy
6/5/2020 9:48:26 AM
T:\Projects\Brunswick_Regional_W&S_H2GO-3081\AB-Water_Supply&Treatment_Plant\Sheets\Wells\C070_WELLSITE 4.dgn

Default

PROPOSED
WELL SITE
NO. 5
980 NUNS TRAIL
LELAND, NC 28451

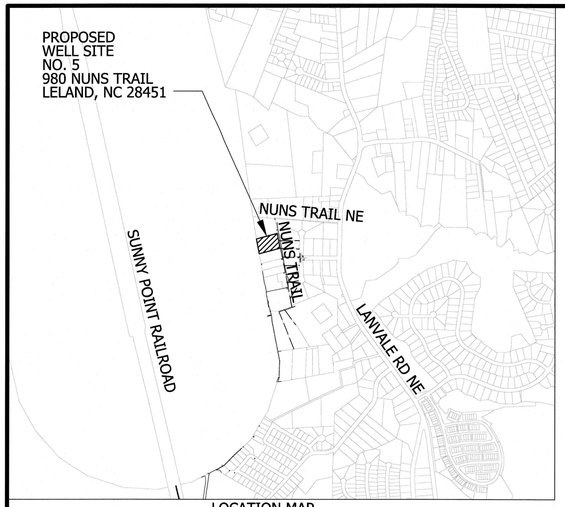

LOCATION MAP
SCALE: 1"=1000'

NOTE:
CONTRACTOR SHALL BE RESPONSIBLE FOR MAKING FINAL CONNECTION TO CONTRACT 2 LINEWORK.

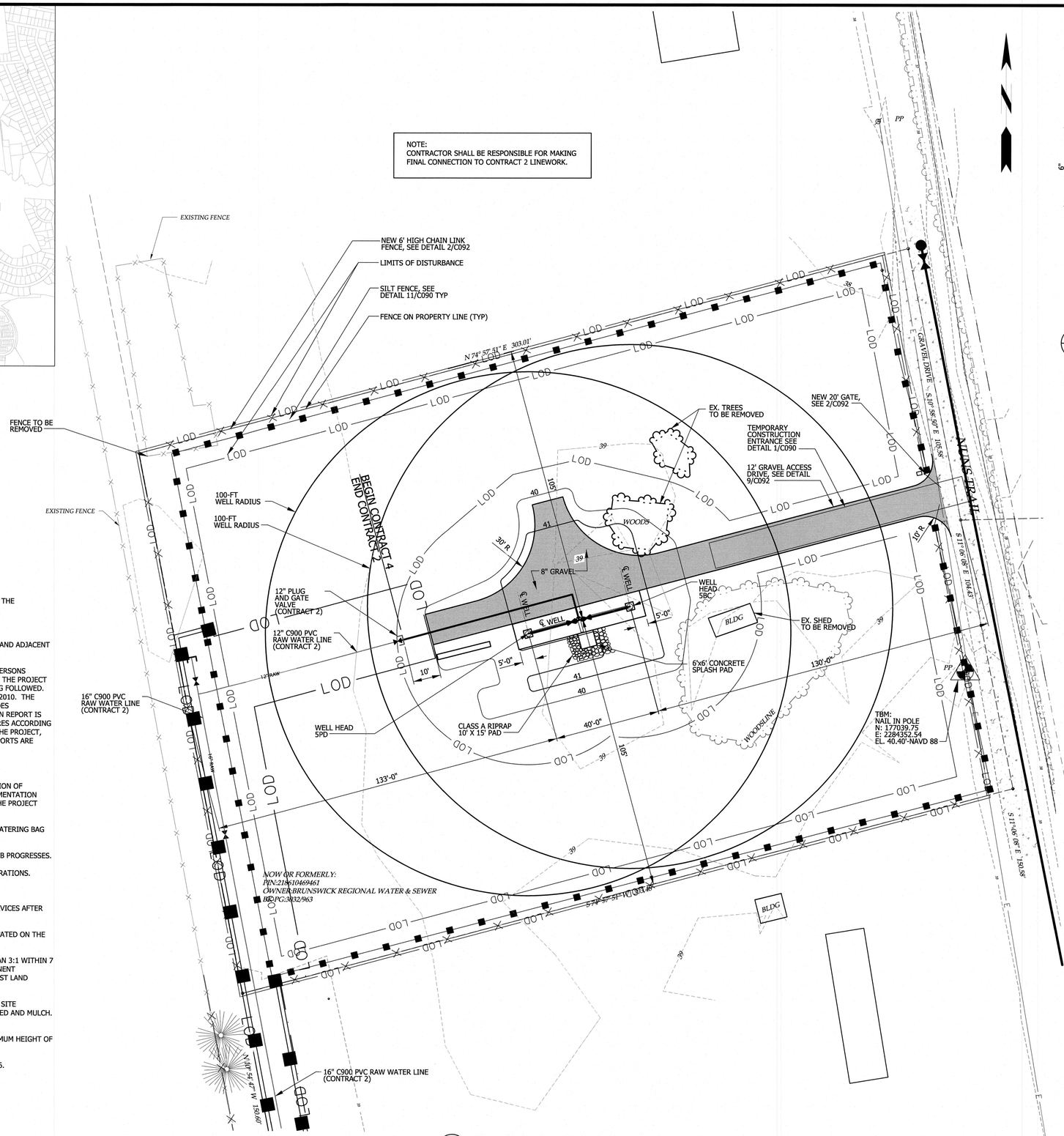

LIMITS OF DISTURBANCE:
0.54 ACRES

4 C080 SITE PLAN-WELL NO. 5
SCALE: 1"=20'

20' 10' 0 20' 40' 60'
SCALE: 1" = 20'

GENERAL CONSTRUCTION NOTES

1. CONTRACTOR SHALL PROVIDE SITE GRADING AS INDICATED TO PRODUCE FINISHED GRADE ELEVATIONS SHOWN.
2. ALL PIPING SHALL BE BURIED WITH 3'-0" MINIMUM COVER UNLESS NOTED OTHERWISE. SEE SPECIFICATIONS FOR PIPE BEDDING AND TRENCHING REQUIREMENTS.

EROSION CONTROL REQUIREMENTS

1. CLEAR SITE ONLY AS NECESSARY TO INSTALL EROSION CONTROL DEVICES AS INDICATED ON THE DRAWINGS.
2. INSTALL TEMPORARY EROSION CONTROL DEVICES AS SHOWN ON THE PLANS.
3. INSTALL SILT FENCE OVER AND AROUND TOP OF EXISTING STORM DRAIN INLETS & PIPES IN AND ADJACENT TO DISTURBED AREAS, AND AROUND THE LOW SIDE OF ALL STOCKPILES.
4. THE SEDIMENTATION POLLUTION CONTROL ACT WAS AMENDED IN 2006 TO REQUIRE THAT PERSONS RESPONSIBLE FOR LAND DISTURBING ACTIVITIES INSPECT A PROJECT AFTER EACH PHASE OF THE PROJECT TO MAKE SURE THAT THE APPROVED EROSION AND SEDIMENTATION CONTROL PLAN IS BEING FOLLOWED. RULES DETAILING THE DOCUMENTATION OF THESE INSPECTIONS TOOK EFFECT OCTOBER 1, 2010. THE SELF-INSPECTION PROGRAM IS SEPARATE FROM THE WEEKLY SELF-MONITORING OF THE NPDES STORMWATER PERMIT FOR CONSTRUCTION ACTIVITIES. THE FOCUS OF THE SELF-INSPECTION REPORT IS THE INSTALLATION AND MAINTENANCE OF EROSION AND SEDIMENTATION CONTROL MEASURES ACCORDING TO THE APPROVED PLAN. THE INSPECTION SHOULD BE CONDUCTED AFTER EACH PHASE OF THE PROJECT, AND CONTINUED UNTIL PERMANENT GROUND COVER IS ESTABLISHED. SELF-INSPECTION REPORTS ARE AVAILABLE ON THE LAND QUALITY WEB SITE:

   http://portal.ncdenr.org/web/lr/erosion THE CONTRACTOR SHALL ENSURE THAT DOCUMENTATION OF INSPECTIONS WILL BE RECORDED ON A SINGLE COPY OF THE APPROVED EROSION AND SEDIMENTATION CONTROL PLAN. THIS PLAN AND ANY INSPECTION REPORTS SHALL BE MADE AVAILABLE ON THE PROJECT SITE.
5. ANY SEEPAGE PUMPED OUT OF BORE PITS OR TRENCHES SHALL BE PUMPED THROUGH A DEWATERING BAG AS MANUFACTURED BY DANDY OR EQUAL.
6. TEMPORARY CHECK DAMS SHALL BE ESTABLISHED AT THE LOW END OF THE WORK AS THE JOB PROGRESSES.
7. NOTIFY ENGINEER FOR SITE INSPECTION PRIOR TO COMMENCING MAIN CONSTRUCTION OPERATIONS.
8. ONCE EROSION CONTROL DEVICES ARE APPROVED, BEGIN CONSTRUCTION OPERATIONS.
9. MAINTAIN EROSION CONTROL DEVICES AS NECESSARY DURING CONSTRUCTION. INSPECT DEVICES AFTER EVERY RAINFALL EVENT AND CLEANOUT TRAPS AND/OR CHECK DAMS WHEN HALF FULL.
10. AS CONSTRUCTION PROGRESSES INSTALL ADDITIONAL EROSION CONTROL DEVICES AS INDICATED ON THE DRAWINGS, CALLED FOR IN THE SPECIFICATIONS, OR AS DIRECTED BY THE ENGINEER.
11. ESTABLISH GROUND COVER (TEMPORARY OR PERMANENT) ON EXPOSED SLOPES STEEPER THAN 3:1 WITHIN 7 CALENDAR DAYS FOLLOWING COMPLETION OF ANY PHASE OF GRADING. ESTABLISH A PERMANENT GROUNDCOVER FOR ALL OTHER DISTURBED AREAS WITHIN 14 CALENDAR DAYS FROM THE LAST LAND DISTURBING ACTIVITY.
12. AFTER SITE IS STABILIZED, REQUEST AN INSPECTION BY THE ENGINEER. UPON APPROVAL OF SITE STABILIZATION, REMOVE TEMPORARY EROSION CONTROL DEVICES, DRESS OUT AREA AND SEED AND MULCH. PERMANENT EROSION CONTROL DEVICES SHALL BE INSTALLED AND APPROVED BY ENGINEER.
13. ALL STOCKPILES SHALL HAVE A MAXIMUM SIDESLOPE OF 2:1 AND SHALL NOT EXCEED A MAXIMUM HEIGHT OF 10 FEET.
14. 100 YEAR FLOOD ELEVATION IS 29.3 PER FIRM MAP PANEL 3720218700J REVISED JUNE 2, 2006.

WELL CONSTRUCTION NOTES

1. REFER TO SPECIFICATIONS SECTION 02526 WATER SUPPLY WELL FOR DETAILED WELL CONSTRUCTION REQUIREMENTS.
2. WELL CONSTRUCTION SHALL BE IN STRICT ACCORDANCE WITH NC ADMINISTRATIVE CODE, 15A NCAC 02C AND 18C, AND OTHER FEDERAL, STATE AND LOCAL REQUIREMENTS AS APPLICABLE.

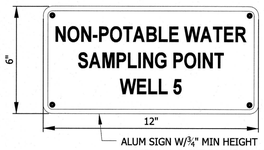

ALUM SIGN W/⅜" MIN HEIGHT LETTERING. PAINT BACKGROUND RED, BORDER AND LETTERING WHITE

NOTES:
1. MOUNT SIGN TO ALUM CLADDING BELOW SAMPLING HOSE BIBB W/ 4-3/4"x1/8" SHEET METAL SCREWS.

1 C080 HOSE BIBB SIGN DETAIL
SCALE: 3" = 1'-0"

PRODUCTION WELL
N 177,054.16
E 2,284,185.59
LAT 34°13'57.9702"
LONG -078°03'35.4303"
WELL 5 PD (05P)

PRODUCTION WELL
N 177064.55
E 2284224.28
LAT 34°13'58.0693"
LONG -078°03'34.9683"
WELL 5 BC (05B)

2 C080 COORDINATES OF WELLS
NO SCALE



ALUM SIGN W/ 2" MIN HEIGHT LETTERING. PAINT BACKGROUND BLUE, BORDER AND LETTERING WHITE

NOTES:
1. MOUNT SIGN TO FENCE W/ 4-3/4"x1/8" SHEET METAL SCREWS.

3 C080 WELL PLACARD
NO SCALE

REVISIONS

THE WOOTEN COMPANY
120 North Boylan Avenue Raleigh, NC 27603-1423
919.828.0531 fax 919.834.3389
License Number: F-0115

BRUNSWICK REGIONAL WATER AND SEWER H2GO
BRUNSWICK COUNTY NORTH CAROLINA
CONTRACT No. 4
REVERSE OSMOSIS WATER TREATMENT PLANT
WELL SITE NO. 5

NORTH CAROLINA PROFESSIONAL SEAL 22531 ENGINEER CHARLES W. DAVIS
7-JUNE-20

DESIGNED BY:	CWD
DRAWN BY:	EML/PMD
CHECKED BY:	CWD
PROJECT NO.:	3081-AB
DATE:	JUNE 7, 2020
SCALE:	AS NOTED

SHEET 24 OF 181

C080

Print2PDFx.plt
20.0000 " / in.
pdonaghy
6/5/2020 9:49:08 AM
T:\Projects\Brunswick_Regional_W&S_H2GO-3081\AB-Water_Supply&Treatment_Plant\Sheets\Wells\C080_WELLSITE 5.dgn

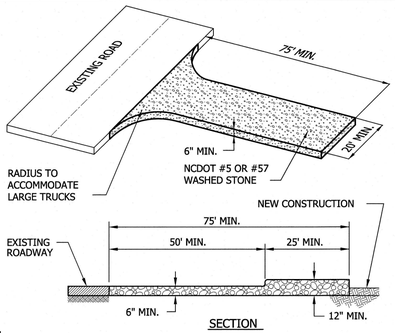

NOTES:

1.) ENTRANCE APPLICABLE AT ALL POINTS OF INGRESS AND EGRESS UNTIL SITE IS STABLIZED.

2.) CONSTRUCTION ENTRANCE SHALL BE PLACED FOR MAXIMUM UTILITY BY ALL CONSTRUCTION VEHICLES.

3.) PERIODIC TOP DRESSING AND ROUTINE MAINTENANCE SHALL BE PROVIDED ON ENTRANCE AS REQUIRED. CONTRACTOR SHALL STOCKPILE FRESH STONE ON SITE.

4.) ANY MATERIAL THAT MAKES IT TO EXISTING PUBLIC ROADWAY SHALL BE REMOVED AND CLEANED IMMEDIATELY.

5.) USE GEOTEXTILE FABRICS TO IMPROVE STABILITY OF THE FOUNDATION IN LOCATIONS SUBJECT TO SEEPAGE OR HIGH WATER TABLE.

1 TEMPORARY CONSTRUCTION ENTRANCE

C090 NOT TO SCALE

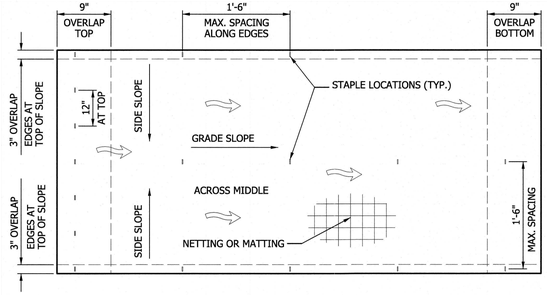

INSTALLATION OF LINER:

1.) APPLY LIME, FERTILIZER, AND SEED BEFORE LAYING LINER.

2.) LAY LINER FROM TOP OF SLOPE OR CHANNEL AND UNROLL IT DOWN THE GRADE. ALLOW NETTING TO LAY LOOSELY WITH WRINKLES. DO NOT STRETCH LINER.

3.) BURY THE UPSLOPE END IN AN ANCHOR TRENCH 6" DEEP, COVER WITH SOIL AND TAMP FIRMLY. PROVIDE STAPLES (1" WIDE x 6" LONG MIN.) AND OVERLAP AS SHOWN ABOVE.

MAINTENANCE:

INSPECT PERIODICALLY OR AFTER RAINSTORMS FOR EROSION OR FAILURE. REPAIR ALL WASHED OUT AREAS BY RE-GRADING, RE-SEEDING, AND RE-INSTALLING LINER AND MULCH AS REQUIRED.

ALL DITCHES SHALL BE LINED WITH NORTH AMERICAN GREEN S150 OR EQUAL.

2 TEMPORARY DITCH LINER

C090 SD-1 NOT TO SCALE

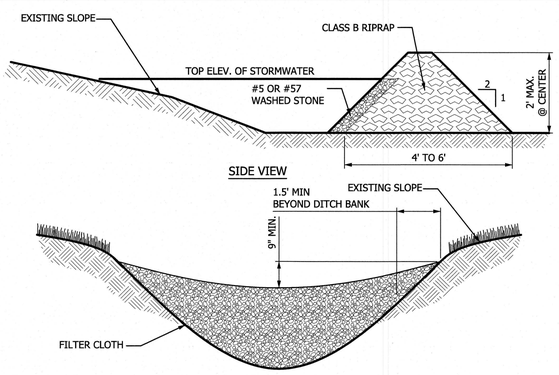

NOTES:

1.) HEIGHT AND WIDTH DETERMINED BY EXISTING TOPOGRAPHY AND SEDIMENT STORAGE REQUIRED.

2.) KEY RIP RAP INTO THE DAM FOR STABILIZATION.

3.) DO NOT PLACE CHECK DAMS IN LIVE STREAMS.

4.) ROCK CHECK DAMS ARE PLACED ON EACH SIDE OF IMPACTED STREAMS AND AT 1000' INTERVALS BETWEEN STREAMS.

3 ROCK CHECK DAM

C090 NOT TO SCALE

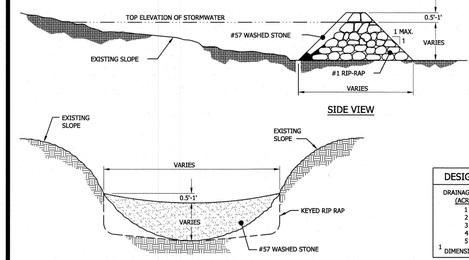

DESIGN OF SPILLWAYS

DRAINAGE AREA (ACRES)	WEIR LENGTH [1] (FT)
1	4.0
2	6.0
3	8.0
4	10.0
5	12.0

[1] DIMENSIONS SHOWN ARE MINIMUM

NOTES:

1. HEIGHT & WIDTH DETERMINED BY EXISTING TOPOGRAPHY AND SEDIMENT STORAGE REQUIRED.
2. KEY RIP RAP INTO THE DAM FOR STABILIZATION.

4 ROCK CHECK DAM WITH WEIR

C090 NOT TO SCALE

REVISIONS

THE WOOTEN COMPANY
120 North Boylan Avenue Raleigh, NC 27603-1423
919.828.0531 fax 919.834.3389
License Number: F-0115

NOTE: 3:1 SIDE SLOPES UNLESS OTHERWISE NOTED ON PLANS.

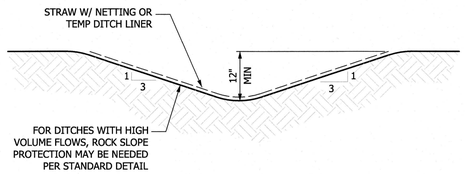

MAINTENANCE

1.) INSPECT PERMANENT DIVERSION DITCH WEEKLY AND AFTER EACH RAINFALL DURING CONSTRUCTION. MAKE ANY REQUIRED REPAIRS IMMEDIATELY.

2.) IMMEDIATELY REMOVE ANY OBSTRUCTIONS FROM THE FLOW AREA.

3.) INSPECT OUTLETS WEEKLY AND AFTER EACH RAINFALL AND MAKE REPAIRS AS NEEDED.

4.) MAINTAIN THE VEGETATION IN THE DITCH IN A VIGOROUS, HEALTHY CONDITION AT ALL TIMES.

ALL PERMANENT DIVERSION DITCHES SHALL BE LINED WITH NORTH AMERICAN GREEN S150 OR EQUAL.

3 PERMANENT DIVERSION DITCH

C090 NOT TO SCALE

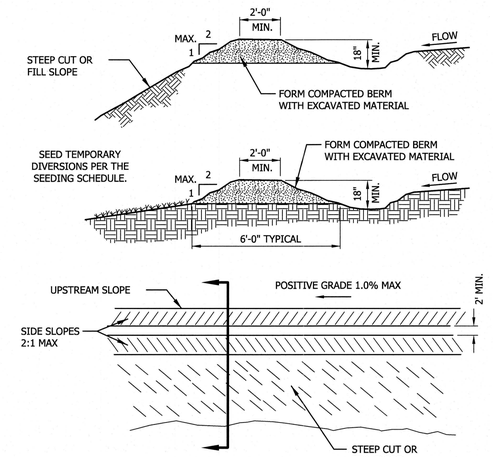

4 TEMPORARY DIVERSION DITCH

C090 NOT TO SCALE

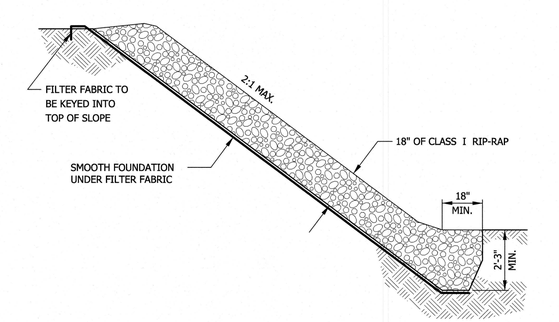

7 SLOPE PROTECTION

C090 NOT TO SCALE

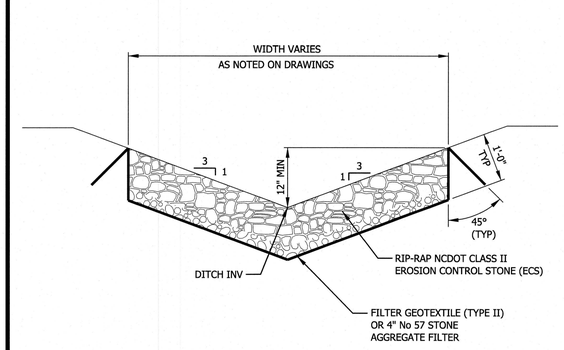

8 CHANNEL PROTECTION

C090 NOT TO SCALE

BRUNSWICK REGIONAL WATER AND SEWER H2GO
BRUNSWICK COUNTY NORTH CAROLINA
CONTRACT No 4
REVERSE OSMOSIS WATER TREATMENT PLANT
STANDARD DETAILS
SEDIMENTATION AND EROSION CONTROL

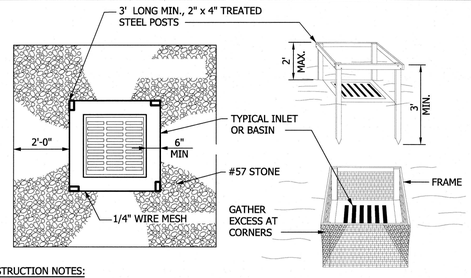

CONSTRUCTION NOTES:

1. DRIVE POSTS INTO THE GROUND TO A DEPTH OF 1.5'
2. WIRE MESH SHALL BE HARDWARE CLOTH (23 GAUGE MIN.) AND SHALL HAVE 1/4 " MESH OPENINGS. BURY FABRIC 1' AND EXTEND TO THE TOP OF THE POSTS.
3. SEDIMENT CONTROL STONE SHALL BE #57 STONE. HEIGHT OF STONE AT WIRE MESH SHALL BE 16 INCHES.
4. FASTEN FABRIC SECURELY AT THE CORNER POSTS.

MAINTENANCE NOTES:

1. INSPECT INLET AT LEAST WEEKLY AND AFTER EACH SIGNIFICANT (1/2 INCH OR GREATER) RAINFALL EVENT.
2. CLEAR MESH WIRE OF ANY DEBRIS OR OTHER OBJECTS TO PROVIDE ADEQUATE FLOW FOR SUBSEQUENT RAINS.
3. TAKE CARE NOT TO DAMAGE OR UNDERCUT THE WIRE MESH DURING SEDIMENT REMOVAL.
4. REPLACE STONE AS NEEDED.

C090 SD-1 INLET PROTECTION

NOT TO SCALE

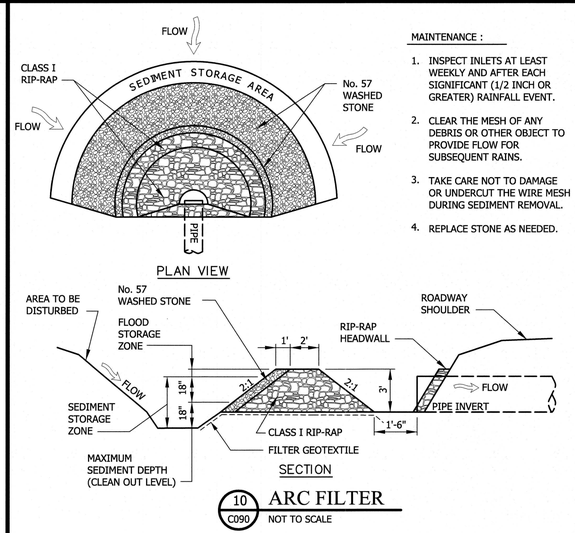

MAINTENANCE :

1. INSPECT INLETS AT LEAST WEEKLY AND AFTER EACH SIGNIFICANT (1/2 INCH OR GREATER) RAINFALL EVENT.
2. CLEAR THE MESH OF ANY DEBRIS OR OTHER OBJECT TO PROVIDE FLOW FOR SUBSEQUENT RAINS.
3. TAKE CARE NOT TO DAMAGE OR UNDERCUT THE WIRE MESH DURING SEDIMENT REMOVAL.
4. REPLACE STONE AS NEEDED.

10 ARC FILTER

C090 NOT TO SCALE

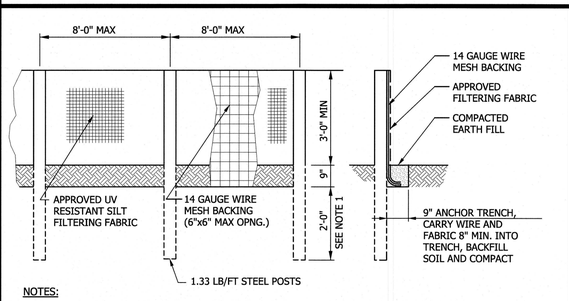

NOTES:

1.) FOR AREAS OF EARTH BACKFILL, POSTS SHALL BE SET AT DEPTHS OF 4'-0" MIN AND ANCHOR TRENCH IS TO BE 9"x9" WITH FILL TO BE COMPACTED.

2.) PROVIDE ADEQUATE EXCAVATION AHEAD OF SILT FENCE TO ACT AS A VELOCITY BREAK AND SILT TRAP.

3.) CONTRACTOR MAY USE ALTERNATE MATERIAL OR METHOD UPON APPROVAL FROM ENGINEER.

MAINTENANCE

1.) INSPECT FENCE WEEKLY AND AFTER EACH RAINFALL. MAKE ANY REQUIRED REPAIRS IMMEDIATELY.

2.) SHOULD THE FABRIC TEAR, DECOMPOSE, OR BECOME INEFFECTIVE, REPLACE IT PROMPTLY.

3.) REMOVE SEDIMENT DEPOSITS AS NECESSARY TO PROVIDE ADEQUATE STORAGE VOLUME FOR THE NEXT RAIN AND TO REDUCE PRESSURE ON THE FENCE. TAKE CARE TO AVOID UNDERMINING THE FENCE DURING CLEANOUT.

4.) REMOVE ALL FENCING MATERIALS AND UNSTABLE SEDIMENT DEPOSITS AND BRING THE AREA TO GRADE AND STABILIZE IT AFTER THE CONTRIBUTING AREA HAS BEEN PROPERLY STABILIZED.

7 SILT FENCE

C090 NOT TO SCALE

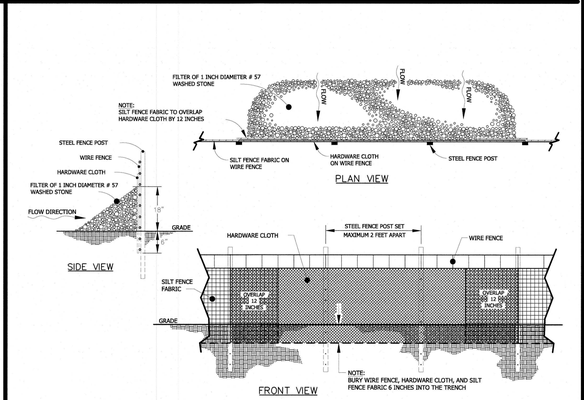

12 SILT FENCE OUTLET

C090 NOT TO SCALE

NORTH CAROLINA PROFESSIONAL SEAL 22531 ENGINEER CHARLES W. DAVIS
7-1-20

DESIGNED BY:	CWD
DRAWN BY:	PMD/EML
CHECKED BY:	CWD
PROJECT NO.:	3081-AB
DATE:	JUNE 7, 2020
SCALE:	AS NOTED

SHEET 25 OF 181

C090

Default
Print2PDFx.plt
1.0000 ft / in.
pdonaghy
6/4/2020 12:14:16 PM
T:\Projects\Brunswick_Regional_W&S_H2GO-3081\AB-Water_Supply&Treatment_Plant\Sheets\WTP\C090_S&EC.dgn

1) Ground Stabilization*		
Site Area Description	**Stabilization Time Frame**	**Stabilization Time Frame Exceptions**
• Perimeter dikes, swales, ditches and slopes	7 days	None
• High Quality Water (HQW) Zones	7 days	None
• Slopes steeper than 3:1	7 days	If slopes are 10' or less in length and are not steeper than 2:1, 14 days are allowed.
• Slopes 3:1 or flatter	14 days	7-days for slopes greater than 50 feet in length
• All other areas with slopes flatter than 4:1	14 days	None (except for perimeters and HQW Zones)

* "Extensions of time may be approved by the permitting authority based on weather or other site-specific conditions that make compliance impracticable." (Section II.B(2)(b))

The major change in the Permit from the previous one is the shorter times to apply ground stabilization such as mulch, wheat straw, or grasses. The NC laws and rules relating to the Sediment Act require, in most places, ground stabilization within 21 days. Based on the new EPA requirements and 9-months' work with a permit advisory group, CTAG, the Division and EPA-developed permit, now contains requirements for ground cover within 14, and in some places, 7 days.

2) Building Wastes Handling
• No paint or liquid wastes in stream or storm drains
• Dedicated areas for demolition, construction and other wastes must be located 50' from storm drains and streams unless no reasonable alternatives available.
• Earthen-material stockpiles must be located 50' from storm drains and streams unless no reasonable alternatives available.
• Concrete materials must be controlled to avoid contact with surface waters, wetlands, or buffers.
3) Discharges to Federally-listed Waters
• Requirements are the same as in previous permit.
• The permit allows reduction from the 20 acre minimum if the Director of DWQ determines that other BMPs provide equivalent protection.

Note:

Provide per charts above unless more stringent directions are given by plans and/or specifications.

1 C091 GROUND STABILIZATION REQUIREMENTS

NOT TO SCALE

Planting Dates	Grass Type	Pounds/Acre
Jan. 1 - May 1	Rye (Grain)	120
	Korean Lespedeza	50
May 1 - Aug. 15	German Millet or Sudangrass	40 50
Aug.15 - Dec. 30	Rye (Grain)	120
Lime		3,000
Fertilizer	10-10-10	800
Mulch	Straw	4,000

3 C091 TEMPORARY SEEDING SCHEDULE

NOT TO SCALE

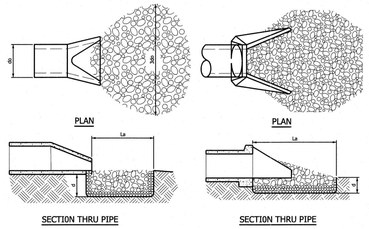

4 C091 ENERGY DISSIPATION PAD

NOT TO SCALE

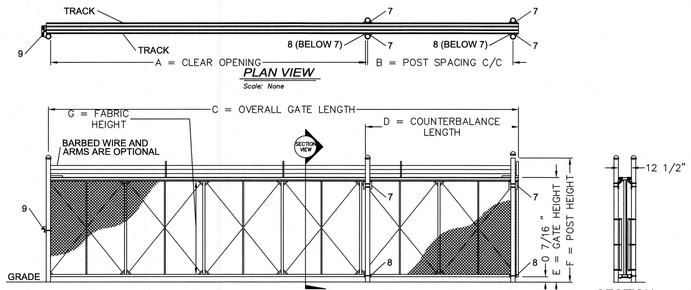

CRITICAL DIMENSION CHART			
MARK	DESCRIPTION	FORMULA	DIM.
A	CLEAR OPENING	A	25'
B	COUNTERBALANCE POST SPACING C/C	(A/2)-11"	11.58'
C	OVERALL GATE LENGTH	A x 1.5	37.5'
D	COUNTERBALANCE LENGTH	A x 0.5	12.5'
E	NOMINAL GATE HEIGHT	E	8'
F	POST HEIGHT (W BARB ARMS)	E + 1'-6"	9.5'
G	FABRIC HEIGHT	E - 1'-0"	7'

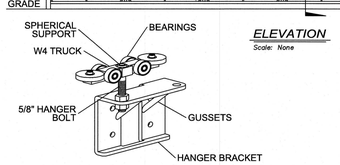



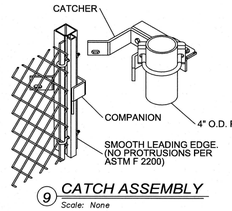

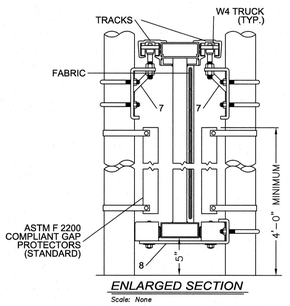

NOTES:

1. ALL FITTINGS STANDARDLY PROVIDED FOR 4" O.D. POSTS.
2. BARB ARMS (FOR BARBED WIRE).

5 C091 CANTILEVER SLIDE GATE

NOT TO SCALE

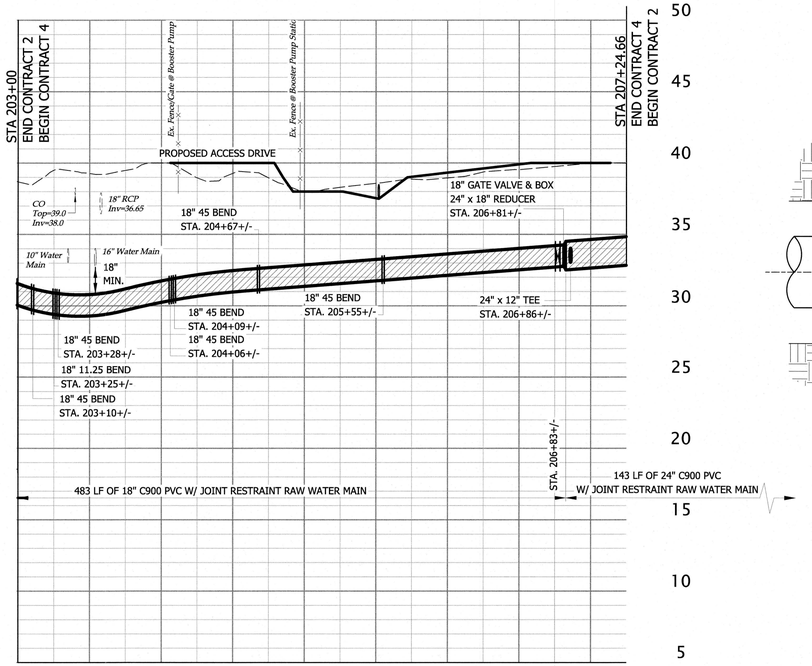

6 C050 RAW WATER PROFILE

SCALE: H: 1"=50' V: 1"=5'

NOTES:

1. SEE PLANS FOR THRUST BLOCK LOCATIONS.
2. CONCRETE SHALL BE 3000 PSI.
3. REINFORCING BARS SHALL BE DEFORMED AND TIED TOGETHER.
4. TRENCH BOTTOM WIDTH IN VICINITY OF THRUST BLOCK(S) INSTALLATION SHALL BE THE MINIMUM WIDTH.
5. BACKFILL TAMP IN 6" LAYERS.
6. PLACE THRUST COLLAR ON ONE FULL JOINT OF PIPE.
7. PLACE MEGALUG RESTRAINT AT MIDDLE OF PIPE JOINT.
8. "TWIST OFF" NUTS ON THRUST RING BEFORE POURING CONCRETE THRUST BLOCK.

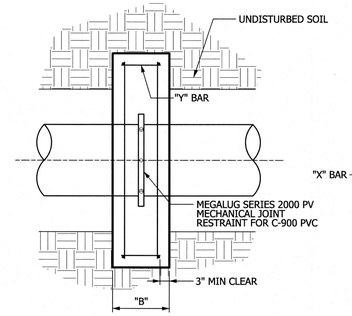

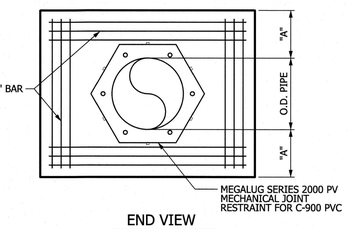

THRUST BLOCK SCHEDULE		
I.D. PIPE	"A"	"B"
6" - 36"	1'-4"	1'-7"
48" & >	1'-8"	1'-9"

REINFORCING REQUIREMENTS

I.D. PIPE	REBAR SIZE	"X" BAR LENGTH	"X" BAR WEIGHT	"Y" BAR LENGTH	"Y" BAR WEIGHT	No. REQ'D
6" - 36"	#5	2'-2" + O.D. PIPE	1.043 lbs/ft	1'-1"	1.043 lbs/ft	X-24, Y-12
48" & >	#6	3'-0" + O.D. PIPE	1.502 lbs/ft	1'-3"	1.502 lbs/ft	X-24, Y-12

7 C091 THRUST COLLAR AND BLOCKING

NOT TO SCALE

REVISIONS

THE WOOTEN COMPANY
120 North Boylan Avenue Raleigh NC 27603-1423
919.828.0531 Fax 919.828.4369
License Number: F-0115

BRUNSWICK REGIONAL WATER AND SEWER H2GO
BRUNSWICK COUNTY NORTH CAROLINA

CONTRACT No 4
REVERSE OSMOSIS WATER TREATMENT PLANT

MISCELLANEOUS DETAILS

NORTH CAROLINA PROFESSIONAL SEAL 22534 ENGINEER CHARLES W. DAVIS
7-2-JUNE-20

DESIGNED BY: CWD
DRAWN BY: PMD/EML
CHECKED BY: CWD
PROJECT NO.: 3081-AB
DATE: JUNE 7, 2020
SCALE: AS NOTED

SHEET 26 OF 181

C091

Print2PDFx.plt
1.0000 ft / in.
pdonaghy
6/4/2020 1:10:41 PM
T:\Projects\Brunswick_Regional_W&S_H2GO-3081\AB-Water_Supply&Treatment_Plant\Sheets\WTP\C091_S&EC.dgn

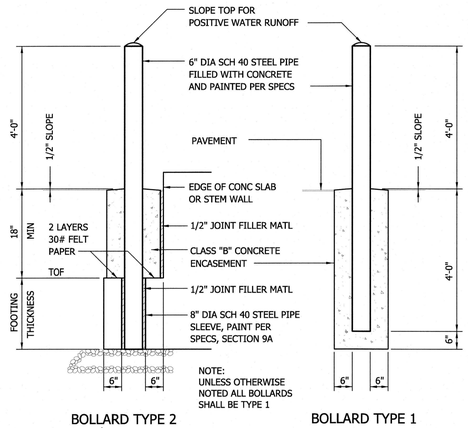

1 C092 **TYPICAL BOLLARD**
NOT TO SCALE

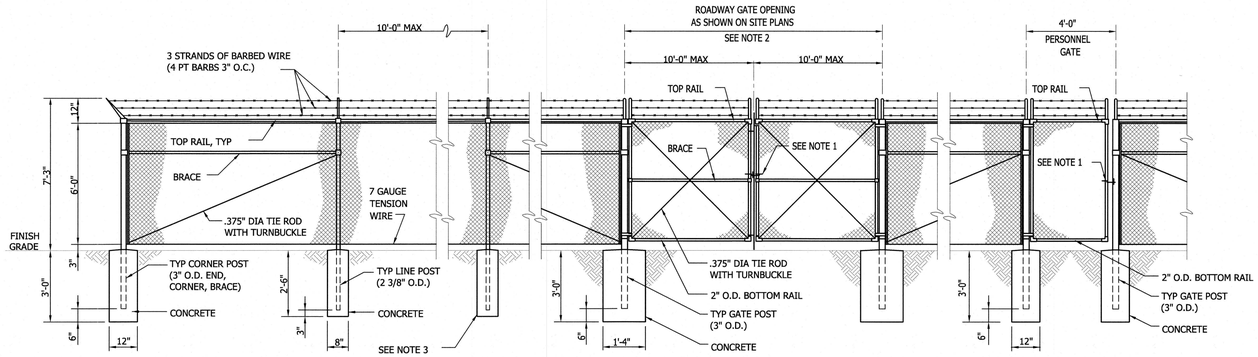

2 C092 **CHAIN LINK FENCE**
NOT TO SCALE

NOTES:
1. PROVIDE LOCKING LATCHING DEVICES FOR SECURITY. (PADLOCKS BY OWNER)
2. PROVIDE LATCHING DEVICES TO HOLD GATES IN OPEN POSITION.
3. IF ROCK IS ENCOUNTERED WHEN SETTING POSTS, DRILL HOLES 4-INCHES LARGER IN DIAMETER THAN POSTS AND BACKFILL TO GRADE WITH CLASS "B" CONCRETE.

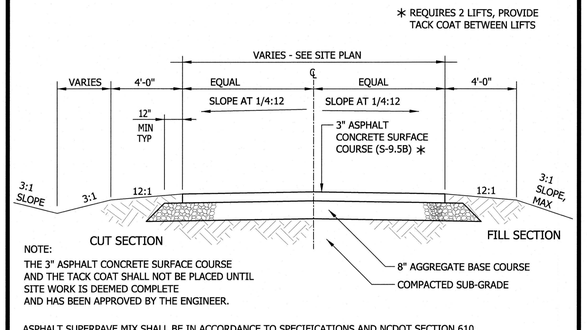

3 C092 **TYPICAL ROADWAY - ASPHALT SUPERPAVE**
NOT TO SCALE

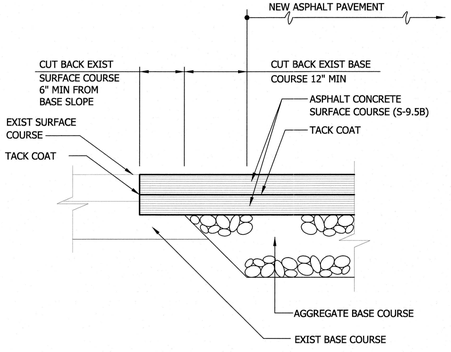

4 C092 **TYPICAL PAVEMENT JUNCTION**
NOT TO SCALE

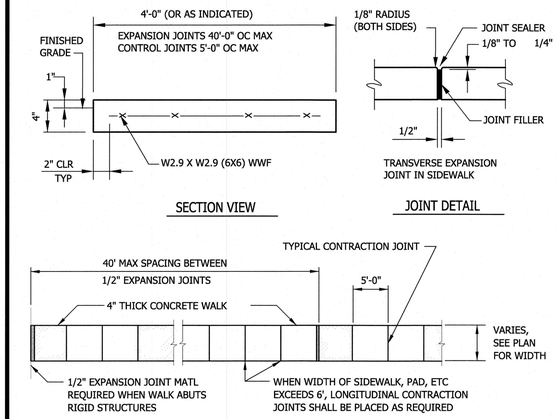

5 C092 **TYPICAL SIDEWALK**
NOT TO SCALE

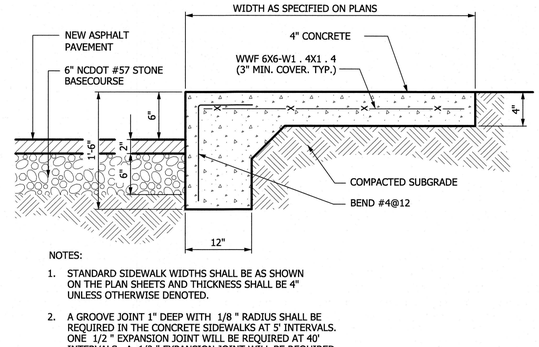

NOTES:
1. STANDARD SIDEWALK WIDTHS SHALL BE AS SHOWN ON THE PLAN SHEETS AND THICKNESS SHALL BE 4" UNLESS OTHERWISE DENOTED.
2. A GROOVE JOINT 1" DEEP WITH 1/8 " RADIUS SHALL BE REQUIRED IN THE CONCRETE SIDEWALKS AT 5' INTERVALS. ONE 1/2 " EXPANSION JOINT WILL BE REQUIRED AT 40' INTERVALS. A 1/2 " EXPANSION JOINT WILL BE REQUIRED WHERE THE SIDEWALK JOINS ANY RIGID STRUCTURE.

6 C092 **TURNDOWN SIDEWALK**
NOT TO SCALE

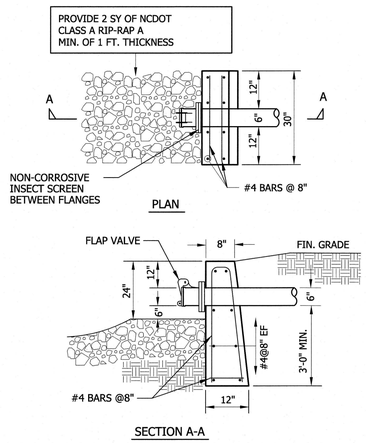

7 C092 **CONCRETE HEADWALL DETAIL**
N.T.S.

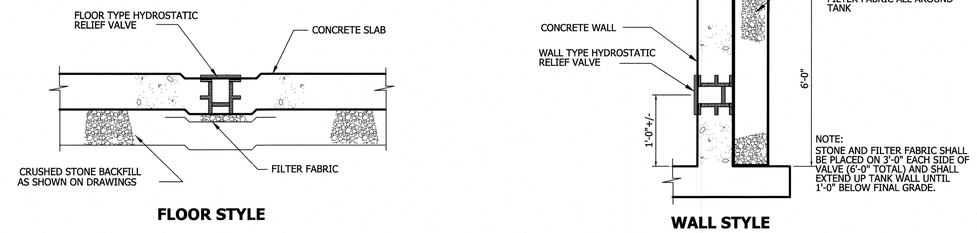

8 C092 **DETAIL - PRESSURE RELIEF VALVE**
NO SCALE

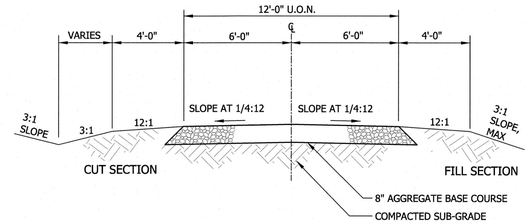

9 C092 **TYPICAL GRAVEL DRIVE**
NOT TO SCALE

REVISIONS

THE WOOTEN COMPANY
120 North Boylan Avenue Raleigh, NC 27603-1423
919.828.3531 Fax 919.833.8369
License Number: F-0115

BRUNSWICK REGIONAL WATER AND SEWER H2GO
BRUNSWICK COUNTY NORTH CAROLINA
REVERSE OSMOSIS WATER TREATMENT PLANT
CONTRACT No 4

STANDARD DETAILS
GENERAL SITE

NORTH CAROLINA PROFESSIONAL ENGINEER SEAL 22531 CHARLES W DAVIS
7-10-20

DESIGNED BY: CWD
DRAWN BY: PMD/EML
CHECKED BY: CWD
PROJECT NO.: 3081-AB
DATE: JUNE 7, 2020
SCALE: AS NOTED

SHEET 27 OF 181

C092

Default

Print2PDFx.plt
1.0000 ft / in.
pdonaghy
6/4/2020 1:11:42 PM
T:\Projects\Brunswick_Regional_W&S_H2GO_3081 AB-Water_Supply&Treatment_Plant\Sheets\WTP\C092_Site.dgn

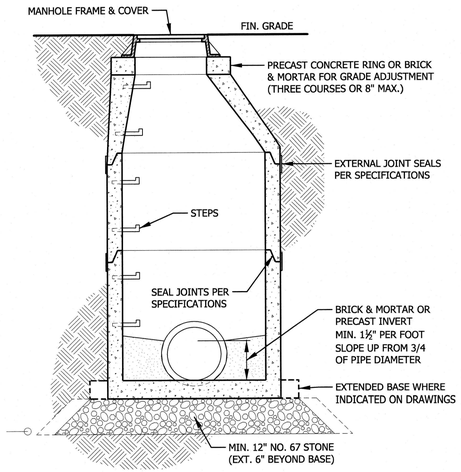

1 C093 **PRECAST CONCRETE MANHOLE**
NOT TO SCALE

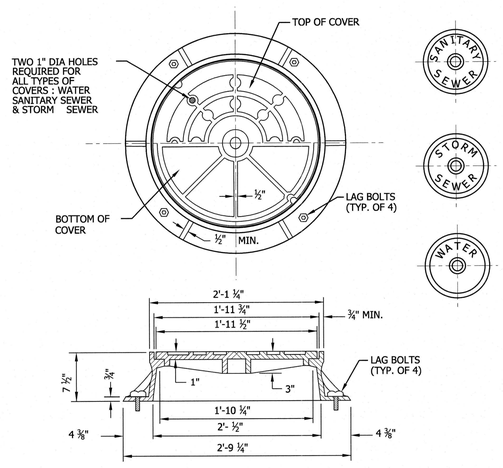

2 C093 **STD MANHOLE RING & COVER**
NOT TO SCALE

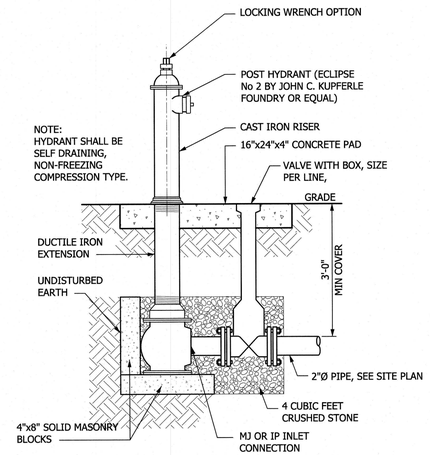

3 C093 **NON-FREEZE POST HYDRANT**
NOT TO SCALE

PIPE INSULATION (EXTERIOR) NOTES:

A) INSULATION ASTM C547; RIGID MOLDED, NONCOMBUSTIBLE, GLASS FIBER
1. 'K' VALVE: ASTM C335, 0.24 AT 75 DEGREES F.
2. MINIMUM SERVICE TEMPERATURE: -20 DEGREES F.
3. MAXIMUM SERVICE TEMPERATURE: 300 DEGREES F.
4. MAXIMUM MOISTURE ABSORPTION: 0.2 PERCENT BY VOLUME.

B) VAPOR BARRIER JACKET
1. ASTM C921, WHITE KRAFT PAPER REINFORCED WITH GLASS FIBER YARN AND BONDED TO ALUMINIZED FILM.
2. MOISTURE VAPOR TRANSMISSION: ASTM E96; 0.02 PERM INCHES.
3. SECURE WITH SELF SEALING LONGITUDINAL LAPS AND BUTT STRIPS.
4. SECURE WITH OUTWARD CLINCH EXPANDING STAPLES AND VAPOR BARRIER MASTIC.

C) ALUMINUM JACKET: ASTM B209
1. THICKNESS: 0.016 INCH SHEET.
2. FINISH: SMOOTH.
3. JOINING: LONGITUDINAL SLIP JOINTS AND 2 INCH LAPS.
4. FITTING: 0.016 INCH THICK DIE SHAPED FITTING COVERS WITH FACTORY ATTACHED PROTECTIVE LINER.
5. METAL JACKET BANDS: 3/8 INCH WIDE; 0.015 INCH THICK ALUMINUM.

D) INSTALLATION
1. FOR EXTERIOR PIPING, INSULATE FITTINGS, JOINTS AND VALVES WITH INSULATION OF LIKE MATERIAL, THICKNESS AND FINISH AS ADJOINING PIPE. COVER WITH ALUMINUM JACKET WITH SEAMS LOCATED ON BOTTOM SIDE OF HORIZONTAL PIPING
2. FOR PIPE SIZE UP TO AND INCLUDING 2" - PROVIDE 1 1/2" THICK INSULATION
3. FOR PIPE SIZE OVER 2" AND LARGER - PROVIDE 2" THICK INSULATION

4 C093 **TYPICAL PIPE INSULATION (EXTERIOR)**
NOT TO SCALE

REVISIONS

THE WOOTEN COMPANY
120 North Boylan Avenue Raleigh NC 27603-1423
919.828.0531 Fax 919.834.3589
License Number: F-0115

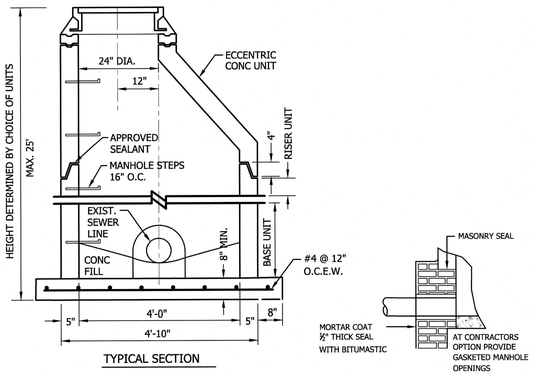

5 C093 **DOGHOUSE MANHOLE**
NOT TO SCALE

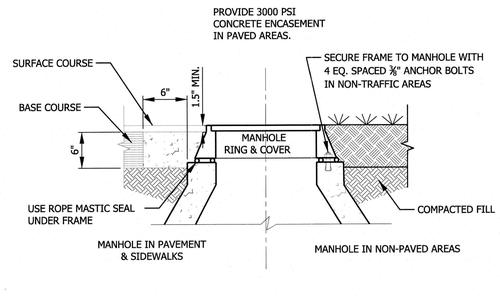

6 C093 **MANHOLE FRAME & COVER**
NOT TO SCALE

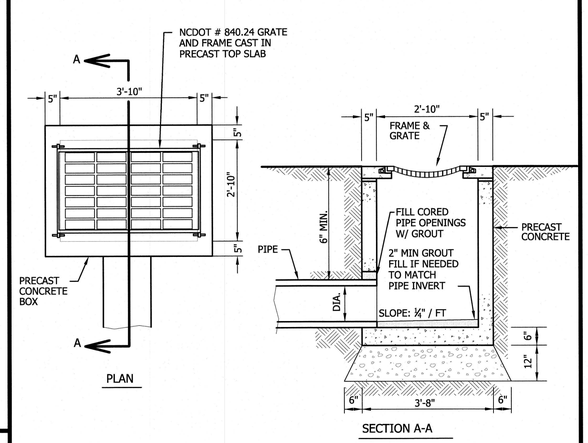

7 C093 **YARD INLET DETAIL**
NOT TO SCALE

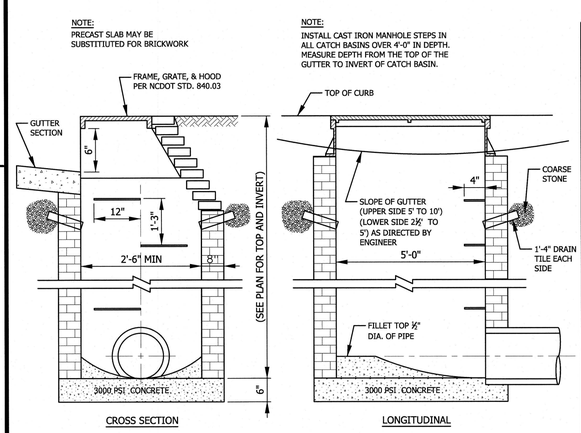

8 C093 **TYPICAL CURB INLET**
NOT TO SCALE

BRUNSWICK REGIONAL WATER AND SEWER H2GO
BRUNSWICK COUNTY NORTH CAROLINA
CONTRACT No 4
REVERSE OSMOSIS WATER TREATMENT PLANT
STANDARD DETAILS
MISCELLANEOUS PIPING DETAILS

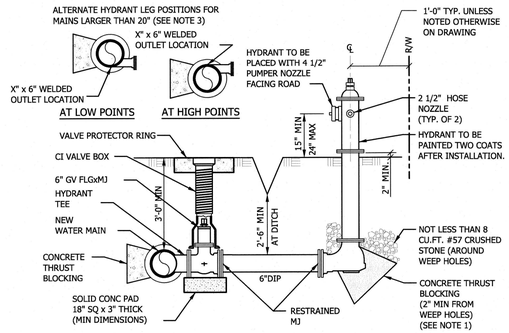

NOTES:
1. POUR CONCRETE SO THAT NO FITTING OR FLANGES ARE COVERED.
2. HYDRANT STANDPIPE TO BE EXTENDED AS NECESSARY TO SUIT FIN GROUND ELEVATION.
3. AT LOCATIONS INDICATED ON PLANS FOR MAINS LARGER THAN 20", USE ALTERNATE HYDRANT LEG POSITION AS SHOWN ABOVE WITH WELDED OUTLETS IN LIEU OF TEES.

9 C093 **FIRE HYDRANT ASSEMBLY**
NOT TO SCALE

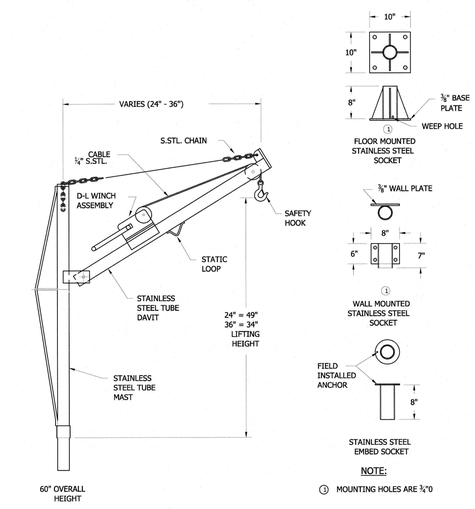

10 C093 **PORTABLE HOIST AND BASE DETAIL**
NTS
PORTABLE HOIST SHALL BE FROM THERN, HALLIDAY, OR OTHER APPROVED MANUFACTURER.

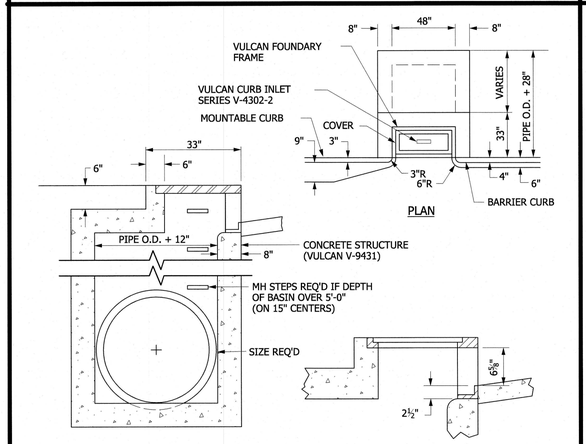

11 C093 **STANDARD CURB INLET**
NOT TO SCALE

NORTH CAROLINA PROFESSIONAL ENGINEER SEAL 25311 CHARLES W. DAVIS
7-JUNE-20

DESIGNED BY:	CWD
DRAWN BY:	PMD/EML
CHECKED BY:	CWD
PROJECT NO.:	3081-A8
DATE:	JUNE 7, 2020
SCALE:	AS NOTED

SHEET 28 OF 181

C093

Default
Print2PDFx.plt
1.0000 ft / in.
pdonaghy
6/4/2020 1:12:16 PM
T:\Projects\Brunswick_Regional_W&S_H2GO-3081\A8-Water_Supply&Treatment_Plant\Sheets\WTP\C093_MANHOLES.dgn

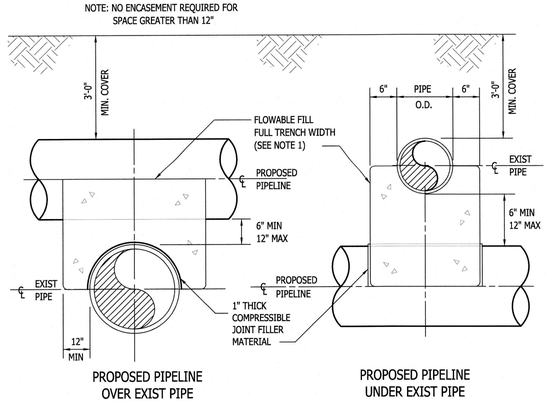

1 C094 TYPICAL PIPE CROSSING
NOT TO SCALE

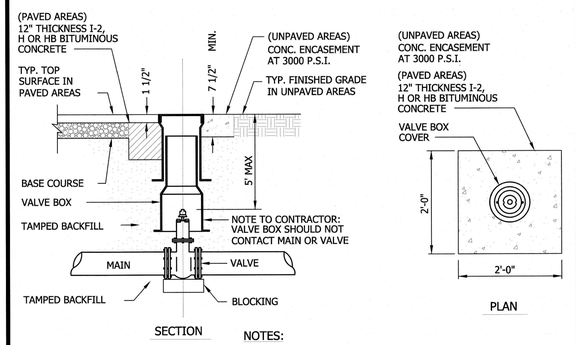

NOTES:

1. D.I.P. MAY BE USED FOR VALVE BOX EXTENSIONS.
2. VALVE OPERATING NUT MUST BE EXTENDED SO THAT THE DEPTH IS NO GREATER THEN 5' FROM THE SURFACE USING A MANUFACTURER APPROVED EXTENSION KIT.
3. PRECAST CONCRETE ENCASEMENT IS ALLOWED OUTSIDE OF PAVED AREAS.

2 C094 STANDARD VALVE BOX INSTALLATION
NOT TO SCALE

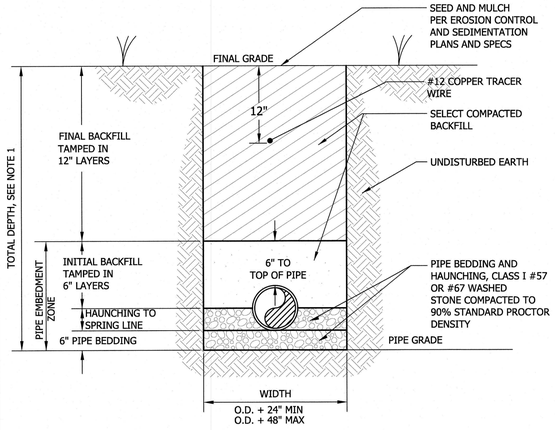

NOTES:

1. TYPICAL FOR PIPE DEPTHS OF 0' TO 14'. FOR DEPTHS GREATER THEN 14' PROVIDE CLASS I MATERIAL FOR ENTIRE PIPE EMBEDMENT ZONE AND COMPACT TO 90%. ALL TRENCHS 20' OR GREATER SHALL BE DUCTILE IRON PIPE.
2. FOR DEEP TRENCHES REQUIRING SHORING AND BRACING, DIMENSIONS SHALL BE TAKEN FROM THE INSIDE FACE OF THE SHORING AND BRACING.
3. NO ROCKS OR BOULDERS 2" OR LARGER SHALL BE USED IN INITIAL BACKFILL.
4. SELECT BACKFILL MATERIAL SHALL BE USED IN ALL LOCATIONS WHERE EXCAVATED MATERIAL IS DETERMINED, BY THE ENGINEER/CONSTRUCTION OBSERVER, TO BE UNSUITABLE FOR BACKFILLING.
5. ALL TRENCHING AND EXCAVATION SHALL BE IN ACCORDANCE WITH THE LATEST EDITION OF THE NORTH CAROLINA OCCUPATIONAL SAFETY AND HEALTH STANDARDS FOR THE CONSTRUCTION INDUSTRY MANUAL.

3 C094 TYPICAL PIPE TRENCH AND PIPE BEDDING
NOT TO SCALE

NOTES: STANDARD THRUST BLOCKING

1.) THRUST BLOCKING SHALL BE USED AT BENDS, TEES, OR WHERE DIRECTED BY ENGINEER.
2.) CONCRETE THRUST BLOCKS, ARCHES, ENCASEMENTS, FLOWABLE FILL, ETC. SHALL BE FORMED USING PLYWOOD OR SANDBAGS TO PROVIDE REQ'D SHAPE.
3.) CONCRETE SHALL BE 3000 PSI MINIMUM.
4.) CONCRETE SHALL NOT ENCASE OR CONTACT BOLTS OR OR ENDS OF MECHANICAL JOINT FITTINGS. WRAP PIPE WITH 4 ML POLYETHYLENE PLASTIC TO PREVENT BOND.

CONCRETE THRUST BLOCK SCHEDULE*

PIPE SIZE (IN)	BEND 90° TEE H	L	45° H	L	22 1/2° H	L	11 1/4° H	L	PLUG C	D	DESIGN PRESSURE (PSI)
≤ 4	1.3	2.6	1.0	2.0	0.7	1.4	0.5	1.0	0.5	1.5	150
6	1.7	3.4	1.3	2.5	0.9	1.8	0.6	1.3	0.8	2.0	150
8	2.3	4.5	1.7	3.3	1.2	2.4	0.8	1.7	1.0	2.5	150
12	3.3	6.6	2.4	4.9	1.7	3.5	1.2	2.5	1.4	2.7	150
16	4.3	8.7	3.2	6.4	2.3	4.6	1.6	3.2	1.8	3.0	150
20	5.2	10.4	3.9	7.5	2.8	5.4	2.0	4.0	2.0	4.0	150
24	6.4	12.9	4.7	9.5	3.4	6.8	2.4	4.8	2.3	5.0	150
30	8.0	16.0	5.9	11.8	4.2	8.4	3.0	6.0	3.0	6.0	150
36	9.6	19.1	7.0	14.1	5.0	10.1	3.6	7.1	3.5	7.5	150
42	11.1	22.2	8.2	16.4	5.8	11.7	4.1	8.3	4.0	9.5	150
48	12.7	25.4	9.3	18.7	6.7	13.3	4.7	9.5	4.5	12.0	150

* BASED ON AVERAGE SOIL PASSIVE BEARING STRENGTH OF 2000 PSF USING SAFETY FACTOR OF 1.5

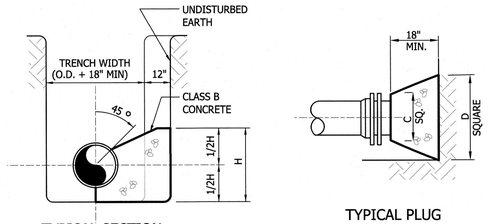

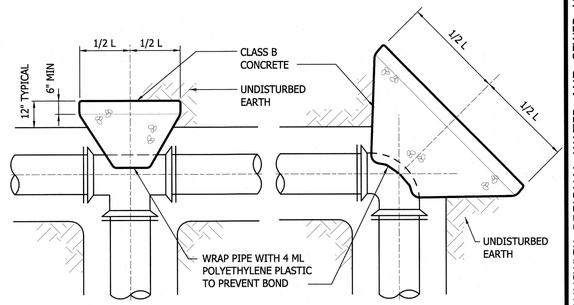

4 C094 STANDARD THRUST BLOCKING
NOT TO SCALE

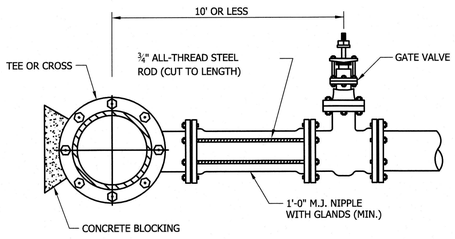

ROD REQUIREMENTS

BRANCH SIZE	NO. OF RODS
4"	2
6"	2
8"	4
12"	4
16"	6
24"	6

GENERAL NOTES:

1. ONCE INSTALLED AND TIGHT, THE STEEL RODS AND BOLTS SHALL BE COATED WITH 2 COATS OF BITUMINOUS BASE PAINT.
2. SEE STANDARD THRUST BLOCK
3. CONCRETE SHALL NOT CONTACT BOLTS OR ENDS OF MECHANICAL FITTINGS.

5 C094 STANDARD VALVE RODDING
NOT TO SCALE

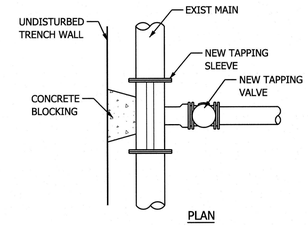

NOTES:

1. ALL FITTINGS SHALL BE COVERED WITH 10 MIL. POLYETHYLENE SHEETS PRIOR TO POURING CONCRETE BLOCKING
2. ALL BACKFILL TO 2'-0" ABOVE PIPE SHALL BE A MIN. OF 95% STANDARD PROCTOR
3. PVC PIPES SHALL BE SUPPORTED EITHER SIDE OF SADDLE LOCATION WITH CONCRETE ENCASEMENT PRIOR TO INSTALLING SADDLE

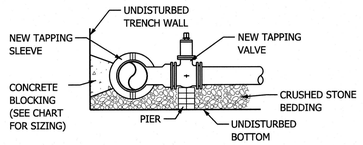

6 C094 TAPPING SLEEVE AND VALVE
NOT TO SCALE

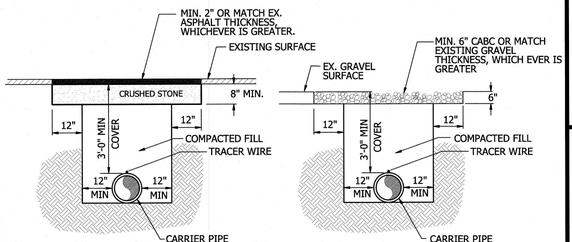

NOTE:
ALL OPEN CUTS ALONG SOIL ROADWAYS SHALL BE BACKFILLED WITH APPROVED SUITABLE MATERIAL AND PROPERLY TAMPED IN ACCORDANCE WITH SPECIFICATIONS.

9 C094 TYPICAL TRENCH SURFACE REPAIR
NOT TO SCALE

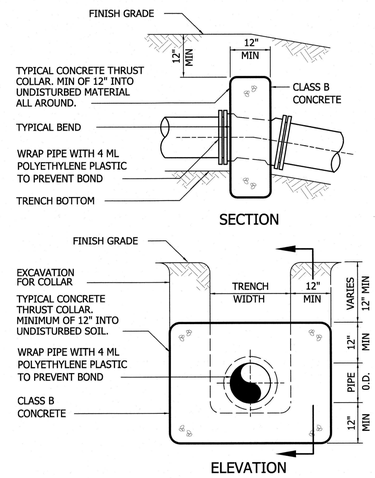

10 C094 THRUST COLLAR FOR VERTICAL BENDS
NOT TO SCALE

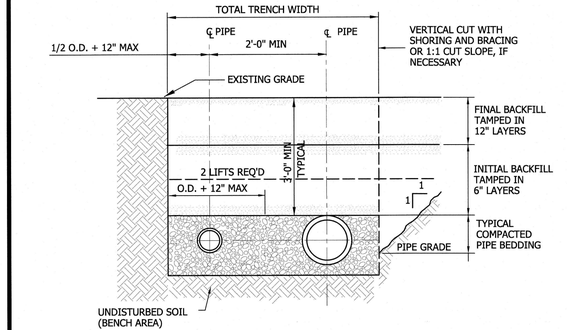

NOTES:

1. SEE STANDARD PIPE BEDDING DETAIL FOR TYPICAL MATERIALS AND COMPACTION OF PIPE BEDDING.
2. TRENCH BOX REQUIRED TO MAINTAIN THE PROPER BENCH AREA.
3. ANY DISTURBED SOIL WITHIN THE BENCH AREA SHALL BE RECOMPACTED TO A MINIMUM 95% STANDARD PROCTOR.
4. ALL SEWER LINE CONSTRUCTION SHALL NOT EXCEED THE D.O.T. RIGHT-OF-WAY.

7 C094 PARALLEL PIPES IN COMMON TRENCH
NOT TO SCALE

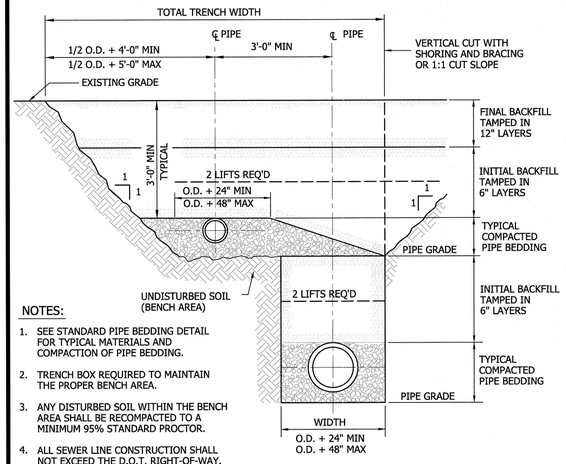

NOTES:

1. SEE STANDARD PIPE BEDDING DETAIL FOR TYPICAL MATERIALS AND COMPACTION OF PIPE BEDDING.
2. TRENCH BOX REQUIRED TO MAINTAIN THE PROPER BENCH AREA.
3. ANY DISTURBED SOIL WITHIN THE BENCH AREA SHALL BE RECOMPACTED TO A MINIMUM 95% STANDARD PROCTOR.
4. ALL SEWER LINE CONSTRUCTION SHALL NOT EXCEED THE D.O.T. RIGHT-OF-WAY.

8 C094 PARALLEL PIPES IN TRENCH
NOT TO SCALE

REVISIONS

THE WOOTEN COMPANY
120 North Boylan Avenue Raleigh NC 27603-1423
919.828.0531 fax 919.834.3589
License Number: F-0115

BRUNSWICK REGIONAL WATER AND SEWER H2GO
BRUNSWICK COUNTY NORTH CAROLINA
CONTRACT No 4
REVERSE OSMOSIS WATER TREATMENT PLANT
STANDARD DETAILS
YARD PIPING

NORTH CAROLINA PROFESSIONAL ENGINEER SEAL 22531 CHARLES W. DAVIS
7-JUNE-20

DESIGNED BY:	CWD
DRAWN BY:	PMD/EML
CHECKED BY:	CWD
PROJECT NO.:	3081-AB
DATE:	JUNE 7, 2020
SCALE:	AS NOTED

SHEET 29 OF 181

C094

Default

Print2PDFx.plt
1.0000 ft / in.
pdonaghy
6/4/2020 1:13:05 PM
T:\Projects\Brunswick_Regional_W&S_H2CO-3081\AB-Water_Supply&Treatment_Plant\Sheets\WTP\C094_YardPipe.dgn

A101

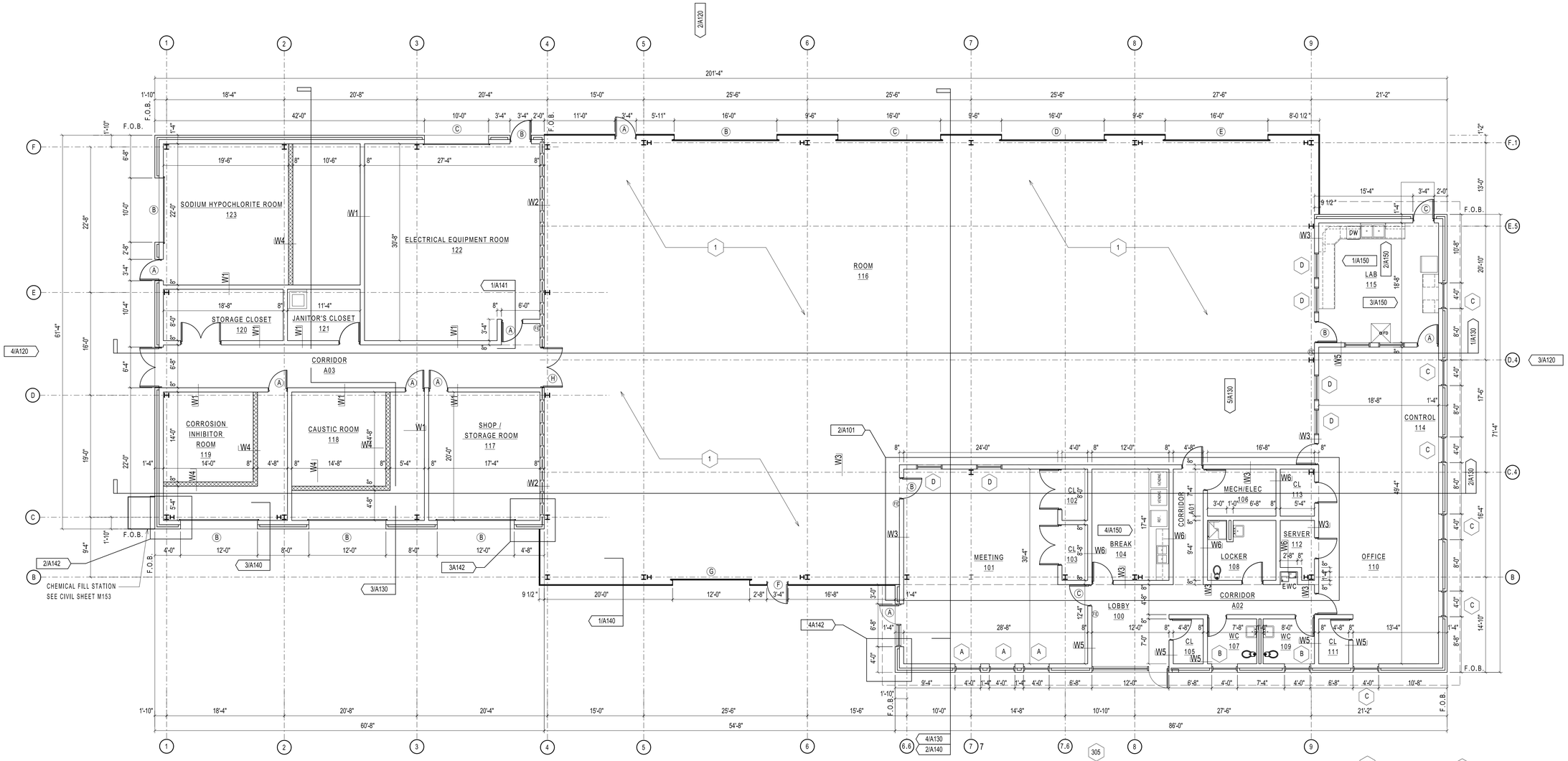

1 FLOOR PLAN
A101 SCALE: 1/8" = 1'-0"

WALL TYPE LEGEND:

- W1 — 8" CMU FROM FLOOR TO 12'-0" AFF. FROM 12'-0" AFF TO ROOF PURLINS 3-5/8" METAL STUD AT 1'-4" O.C. WITH 5/8" GYPSUM BOARD BOTH SIDES.
- W2 — 8" CMU FROM FLOOR TO ROOF PURLINS
- W3 — 8" CMU FROM FLOOR TO 14'-0" AFF. FROM 14'-0" AFF TO ROOF PURLINS 3-5/8" METAL STUD AT 1'-4" O.C. WITH 5/8" GYPSUM BOARD BOTH SIDES WITH VAPOR BARRIER AND BATT INSULATION
- W4 — 8" CMU LOW WALL SEE BUILDING SECTIONS SHEET A130 FOR HEIGHTS.
- W5 — 8" CMU FROM FLOOR TO 10'-0" AFF
- W6 — 8" CMU FROM FLOOR TO 14'-0" AFF

GENERAL NOTES:

1. SEE SHEET S101 FOR DEPRESSED SLABS AND DRAINS IN ROOM 116.
2. SEE STRUCTURAL SHEETS FOR SLAB ELEVATIONS.

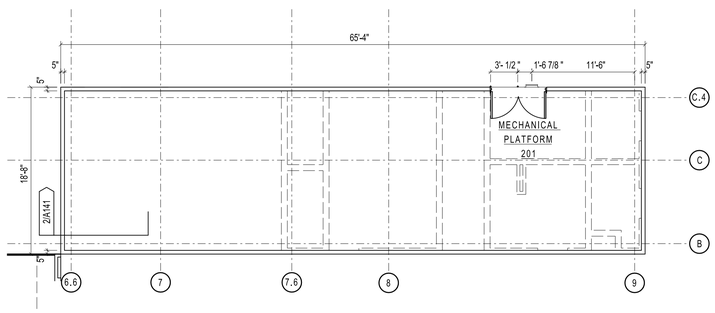

2 MECHANICAL PLATFORM PLAN
A101 SCALE: 1/8" = 1'-0"

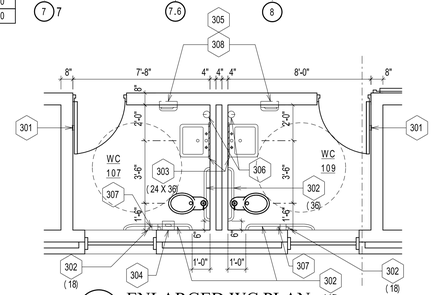

3 ENLARGED WC PLAN
A101 SCALE: 1/4" = 1'-0"

KEY TO TOILET PLAN NOTES

301 COAT HOOK (CH)
302 GRAB BAR (LENGTH)
303 MIRROR (W X H)
304 NAPKIN DISPOSAL (SND)
305 PAPER TOWEL DISPENSER (PTD)
306 WALL MOUNTED SOAP DISPENSER (WMSD)
307 TOILET TISSUE DISPENSER (TTD)
308 TRASH RECEPTACLE

NOTE:
SEE SHEET A102 FOR TOILET FIXTURES MOUNTING HEIGHTS.

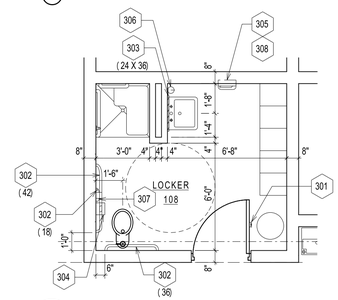

4 ENLARGED LOCKER RM. PLAN
A101 SCALE: 1/4" = 1'-0"

REVISIONS

THE WOOTEN COMPANY
120 North Boylan Avenue Raleigh, NC 27603-1423
919.828.0531 Fax 919.831.1389
License Number: F-0113

BRUNSWICK REGIONAL WATER AND SEWER H2GO
BRUNSWICK COUNTY NORTH CAROLINA
CONTRACT No. 4
REVERSE OSMOSIS WATER TREATMENT PLANT

R.O. FLOOR PLAN

RUSSELL D. PEARLMAN
REGISTERED ARCHITECT
6895
6.4.20
SOUTH CAROLINA
RALEIGH, N.C.

DESIGNED BY:	RDP
DRAWN BY:	RTP
CHECKED BY:	RDP
PROJECT NO.:	3081-AB
DATE:	JUNE 7, 2020
SCALE:	AS NOTED

SHEET 30 OF 181

A101

pdf2013.pltcfg
0:1.0000 " / in.
rpowell
6/9/2020 1:02:33 PM
T:\Projects\Brunswick_Regional_W&S_H2GO-3081\AB-Water_Supply&Treatment_Plant\Sheets\WTP\A-Sheets-RO.dgn

A102

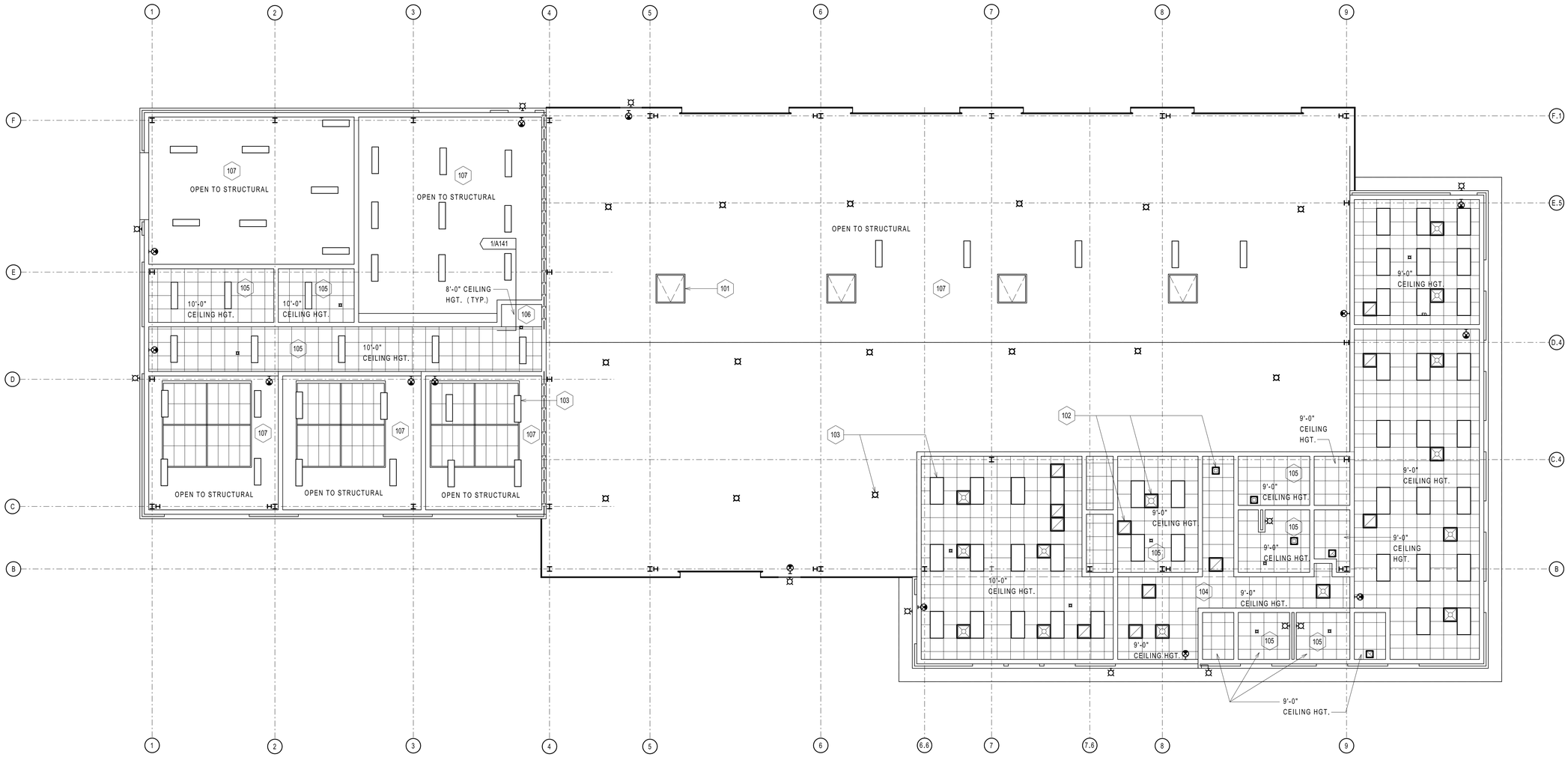

1 A102 REFLECTED CEILING FLOOR PLAN
SCALE: 1/8" = 1'-0"

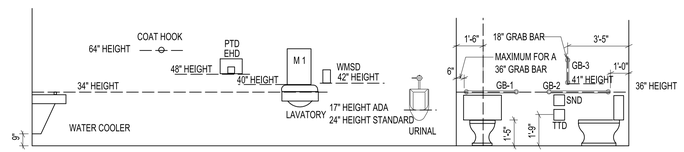

2 A102 TOILET FIXTURES MOUNTING HEIGHTS
SCALE: 1/4" = 1'-0"

REVISIONS

THE WOOTEN COMPANY
120 North Boylan Avenue Raleigh, NC 27603-1423
919.828.0531 Fax 919.834.5369
License Number: F-1015

BRUNSWICK REGIONAL WATER AND SEWER H2GO
BRUNSWICK COUNTY NORTH CAROLINA
CONTRACT No. 4
REVERSE OSMOSIS WATER TREATMENT PLANT
REFLECTED CEILING FLOOR PLAN

DANIEL D. PEARLMAN
REGISTERED ARCHITECT
6895
6-4-20
NORTH CAROLINA
RALEIGH, N.C.

DESIGNED BY: RDP
DRAWN BY: RTP
CHECKED BY: RDP
PROJECT NO.: 3081-AB
DATE: JUNE 7, 2020
SCALE: AS NOTED

SHEET 31 OF 181

A102

pdf2013.pltcfg
0:1.0000 "-" / in.
rpowell
6/9/2020 1:03:25 PM
T:\Projects\Brunswick_Regional_W&S_H2GO-3081\AB-Water_Supply&Treatment_Plant\Sheets\WTP\A-Sheets-RO.dgn

A103

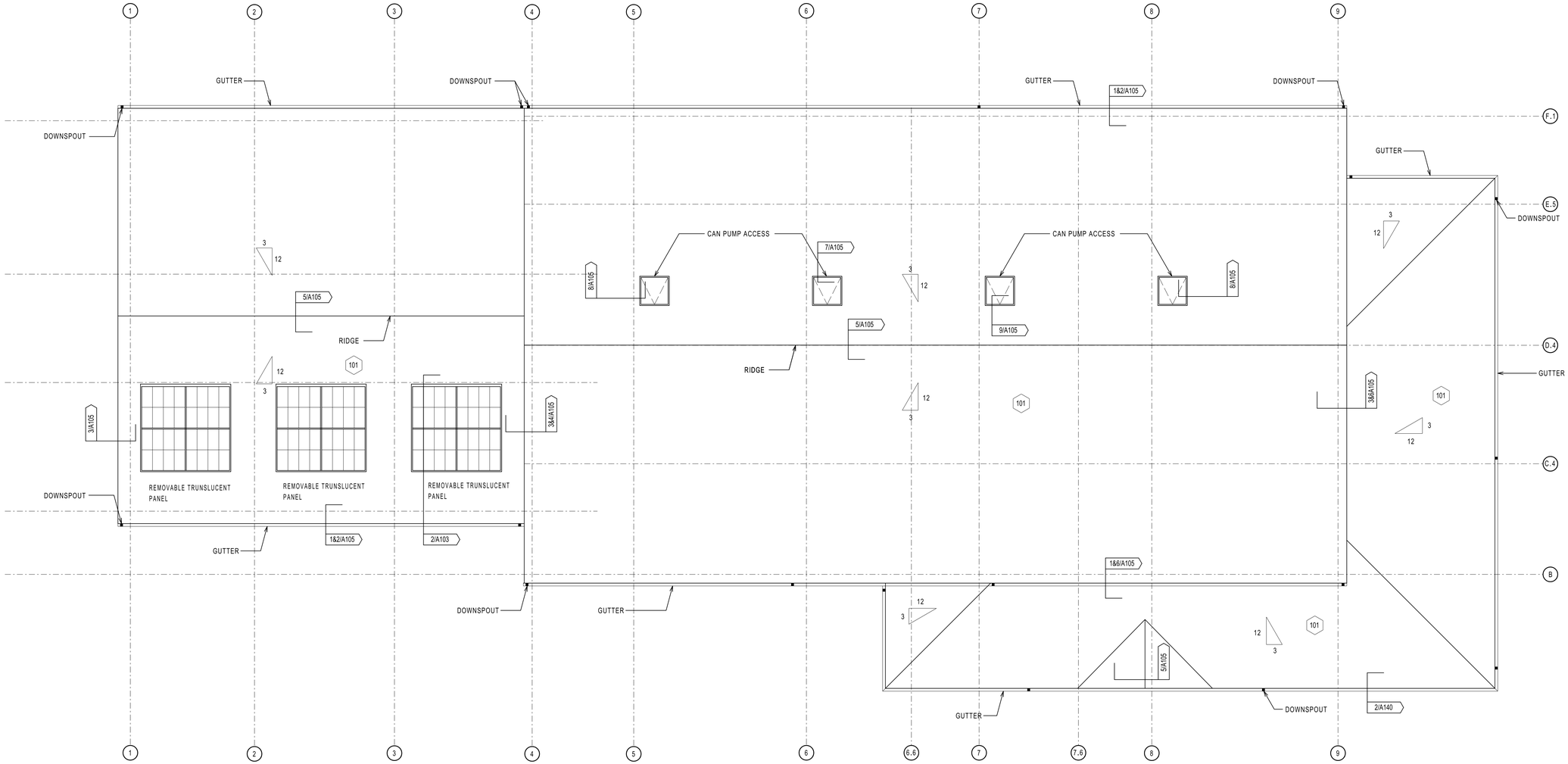

1 ROOF PLAN
A103 SCALE: 1/8" = 1'-0"

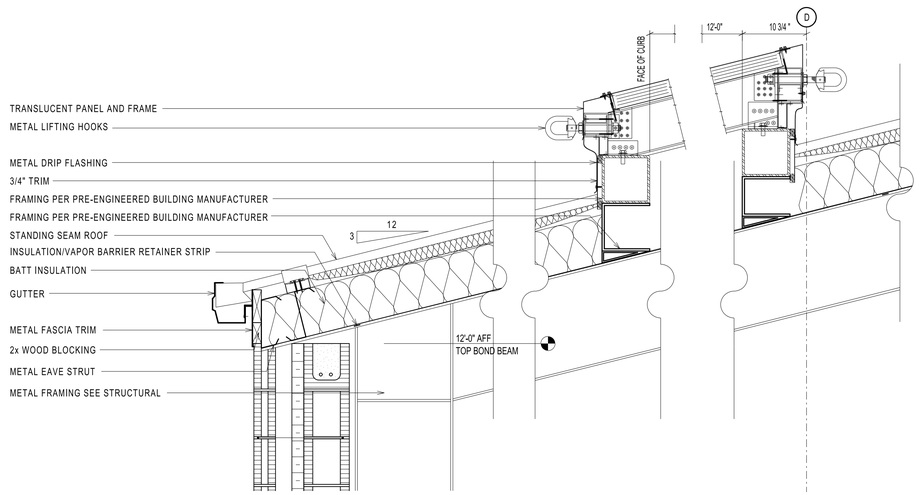

2 ROOF DETAIL AT TRANSLUCENT PANEL
A103 SCALE: 1" = 1'-0"

KEY TO NOTES

101 STANDING SEAM

REVISIONS

THE WOOTEN COMPANY
120 North Boylan Avenue Raleigh, NC 27603-1423
919.828.0531 Fax 919.831.1389
License Number: F-1015

BRUNSWICK REGIONAL WATER AND SEWER H2GO
BRUNSWICK COUNTY NORTH CAROLINA
CONTRACT No. 4
REVERSE OSMOSIS WATER TREATMENT PLANT

ROOF PLAN

RUSSELL D. PEARLMAN
REGISTERED ARCHITECT
6895
6.4.20
SOUTH CAROLINA
RALEIGH, N.C.

DESIGNED BY:	RDP
DRAWN BY:	RTP
CHECKED BY:	RDP
PROJECT NO.:	3081-AB
DATE:	JUNE 7, 2020
SCALE:	AS NOTED

SHEET 32 OF 181

A103

pdf2013.pltcfg
0:1.0000 "=" in.
rpowell
6/9/2020 1:04:10 PM
T:\Projects\Brunswick_Regional_W&S_H2GO-3081\AB-Water_Supply&Treatment_Plant\Sheets\WTP\A-Sheets-RO.dgn

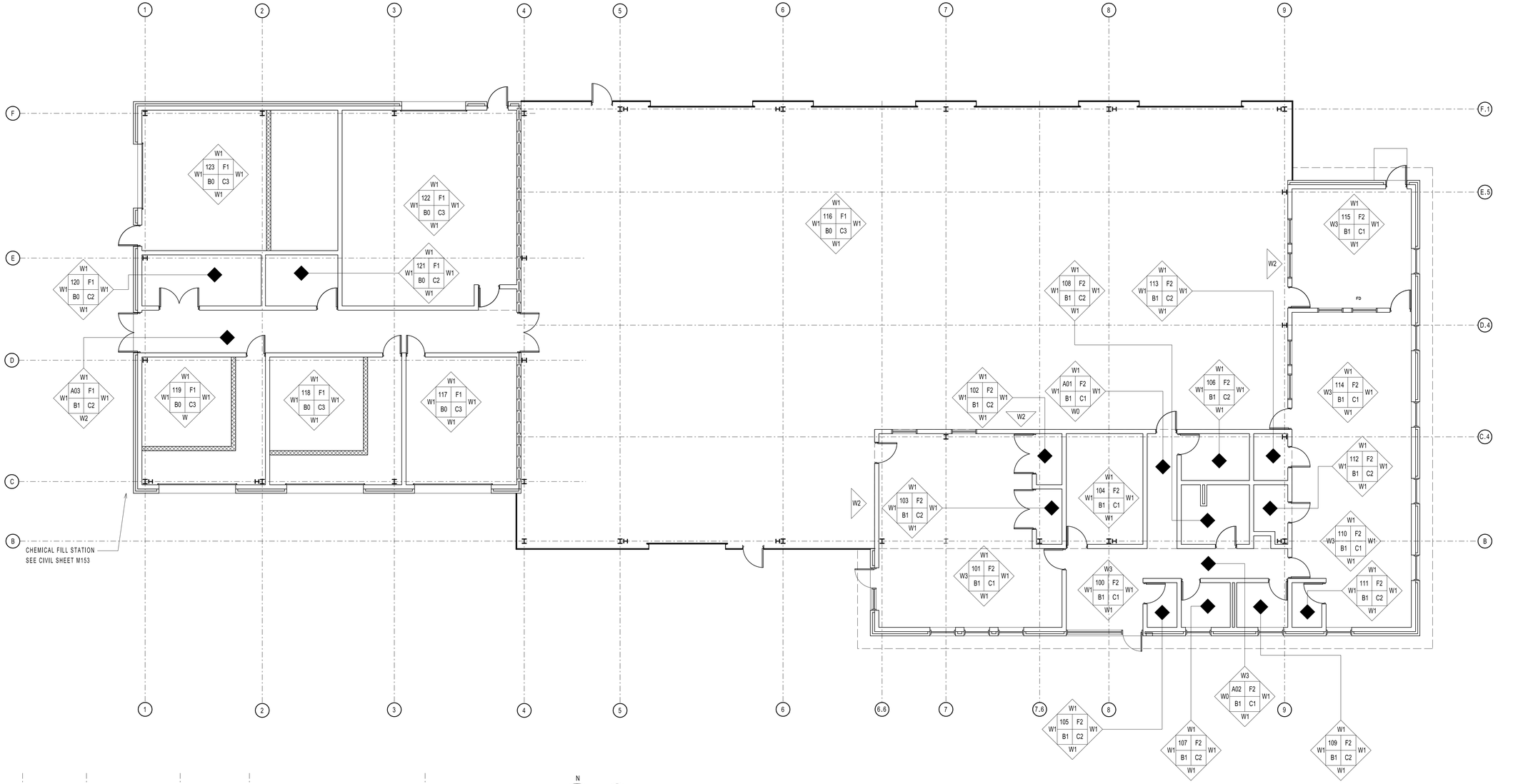

1 A104 FINISHED FLOOR PLAN
SCALE: 1/8" = 1'-0"

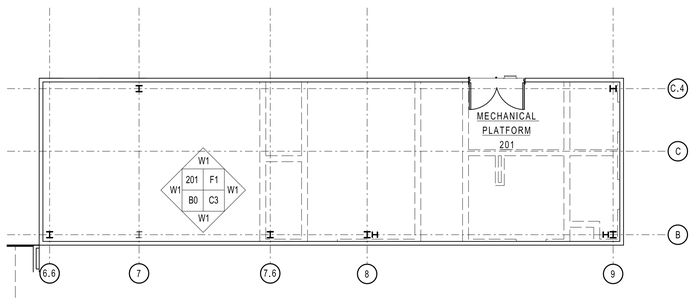

2 A104 FINISHED MECHANICAL PLATFORM PLAN
SCALE: 1/8" = 1'-0"

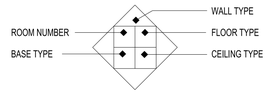

FINISH SCHEDULE

KEY	FLOOR MATERIAL	KEY	WALL MATERIAL	KEY	MISCELLANEOUS
F1	DENSIFIED CONCRETE	W1	PAINT 1		
F2	POLISHED	W2	PAINT 2		
		W3	PAINT 3		
		W4		GENERAL NOTES	
				0 = NO FINISH	
KEY	BASE MATERIAL	KEY	CEILING MATERIAL		
B1	RUBBER	C1	2x2 SUSPENDED TEGULAR		
		C2	2x2 SUSPENDED FLUSH		
		C3	OPEN TO VAPOR BARRIER		

REVISIONS

THE WOOTEN COMPANY
120 North Boylan Avenue Raleigh, NC 27603-1423
919.828.0531 fax 919.834.3589
License Number: F-0115

BRUNSWICK REGIONAL WATER AND SEWER H2GO
BRUNSWICK COUNTY NORTH CAROLINA

CONTRACT No. 4
REVERSE OSMOSIS WATER TREATMENT PLANT

FINISHED FLOOR PLAN

RUSSELL D. PEARLMAN
REGISTERED ARCHITECT
6895
6-4-20
NORTH CAROLINA
RALEIGH, N.C.

DESIGNED BY: RDP
DRAWN BY: RTP
CHECKED BY: RDP
PROJECT NO.: 3081-AB
DATE: JUNE 7, 2020
SCALE: AS NOTED

SHEET 33 OF 181

A104

A104

pdf2013.pltcfg
0:1.0000 ':" / in.
rpowell
6/9/2020 1:04:47 PM
T:\Projects\Brunswick_Regional_W&S_H2GO-3081\AB-Water_Supply&Treatment_Plant\Sheets\WTP\A-Sheets-RO.dgn

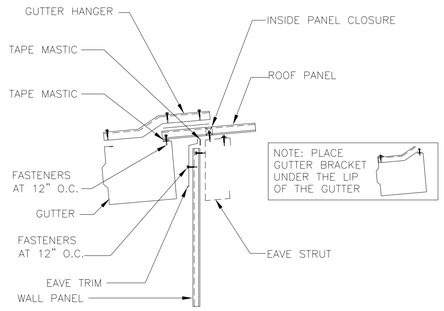

1 A105 EAVE GUTTER DETAIL
NOT TO SCALE

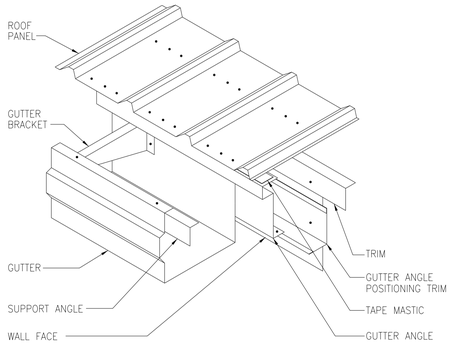

2 A105 EAVE DETAIL
NOT TO SCALE

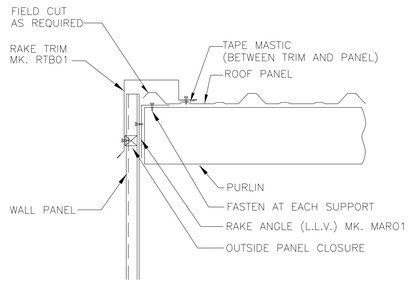

3 A105 RAKE DETAIL
NOT TO SCALE

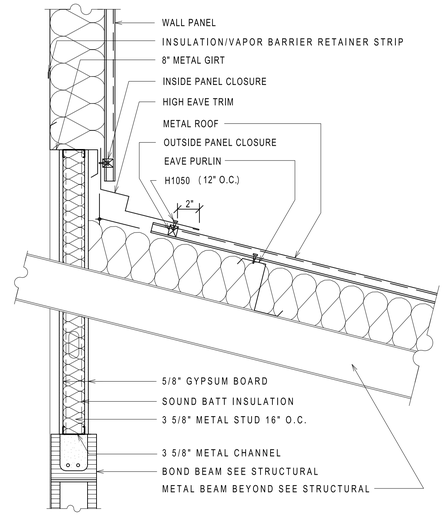

10 A105 HIGH EAVE TO WALL DETAIL
SCALE: 1" = 1'-0"

4 A105 WALL TO LOW ROOF DETAIL
NOT TO SCALE

5 A105 RIDGE DETAIL
NOT TO SCALE

6 A105 HIGH EAVE DETAIL
NOT TO SCALE

7 A105 LOW SIDE CURB DETAIL
NOT TO SCALE

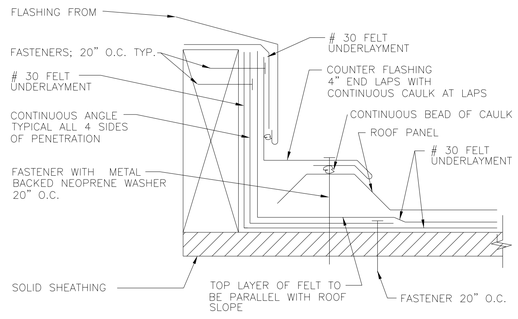

8 A105 CURB AT SIDE DETAIL
NOT TO SCALE

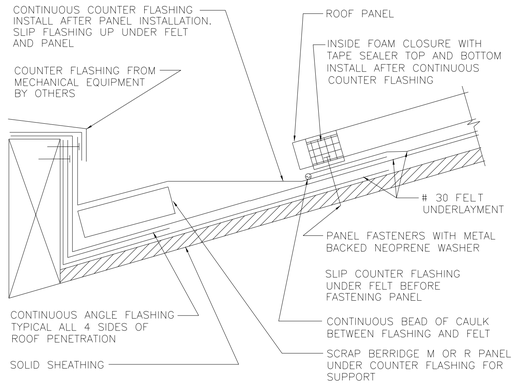

9 A105 HIGH SIDE CURB DETAIL
NOT TO SCALE

REVISIONS

THE WOOTEN COMPANY
120 North Boylan Avenue Raleigh, NC 27603-1423
919.828.0531 Fax 919.831.1389
License Number: F-0113

BRUNSWICK REGIONAL WATER AND SEWER H2GO
BRUNSWICK COUNTY NORTH CAROLINA
CONTRACT No. 4
REVERSE OSMOSIS WATER TREATMENT PLANT

ROOF DETAILS

RUSSELL D. PEARLMAN
REGISTERED ARCHITECT
6895
6.4.20
SOUTH CAROLINA
RALEIGH, N.C.

DESIGNED BY: RDP
DRAWN BY: RTP
CHECKED BY: RDP
PROJECT NO.: 3081-AB
DATE: JUNE 7, 2020
SCALE: AS NOTED

SHEET 34 OF 181

A105

pdf2013.pltcfg
0:1.0000 "=" / in.
rpowell
1:06:22 PM
6/9/2020
T:\Projects\Brunswick_Regional_W&S_H2GO-3081\AB-Water_Supply&Treatment_Plant\Sheets\WTP\A-Sheets-RO.dgn

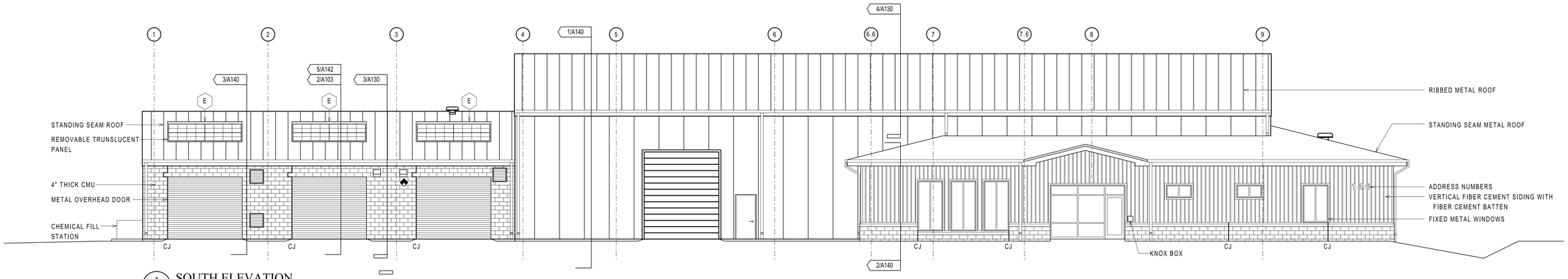

1 A120 SOUTH ELEVATION
SCALE: 1/8" = 1'-0"

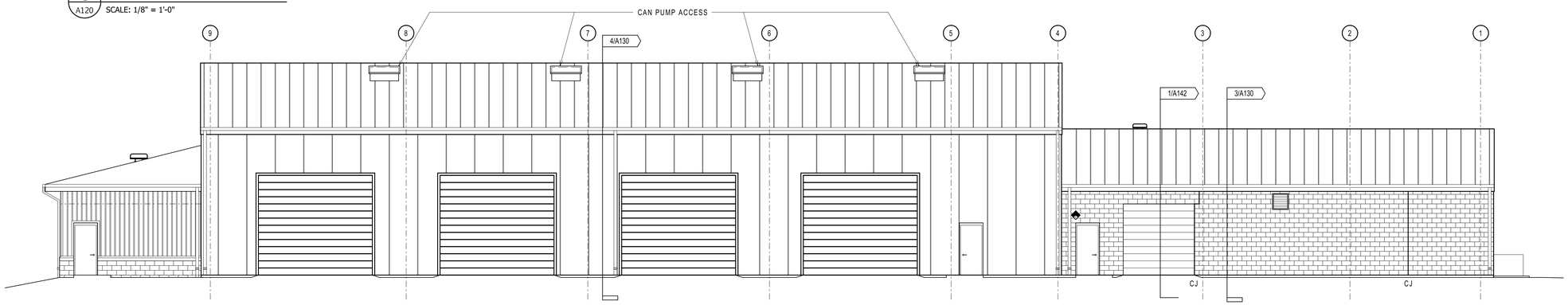

2 A120 NORTH ELEVATION
SCALE: 1/8" = 1'-0"

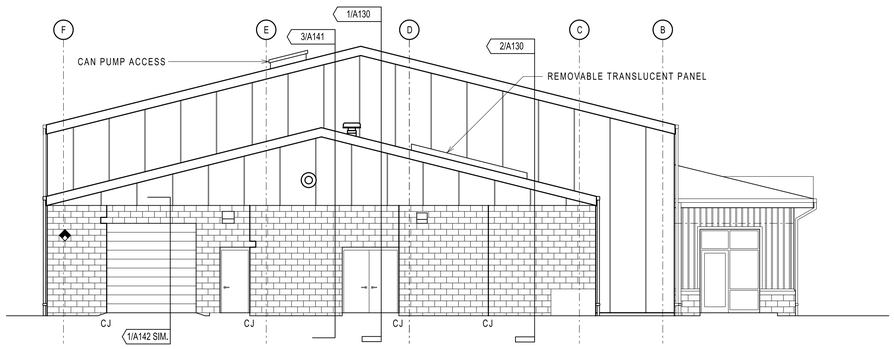

3 A120 EAST ELEVATION
SCALE: 1/8" = 1'-0"

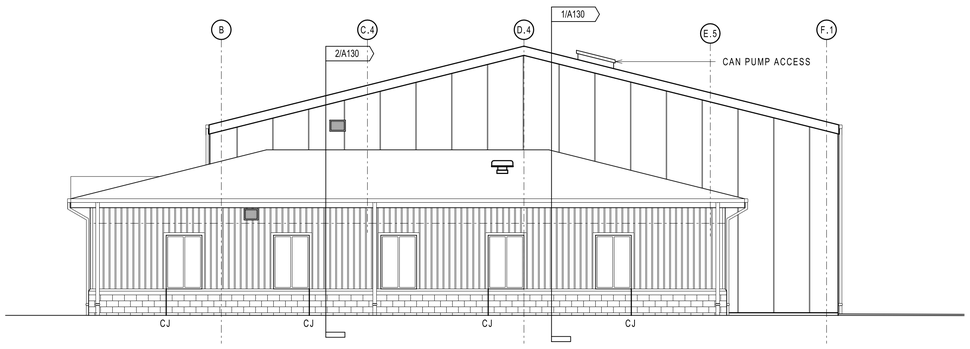

4 A120 WEST ELEVATION
SCALE: 1/8" = 1'-0"

REVISIONS

THE WOOTEN COMPANY
120 North Boylan Avenue Raleigh, NC 27603-1423
919.828.0531 Fax 919.831.1589
License Number: F-1015

BRUNSWICK REGIONAL WATER AND SEWER H2GO
BRUNSWICK COUNTY NORTH CAROLINA

CONTRACT No. 4

REVERSE OSMOSIS WATER TREATMENT PLANT

BUILDING ELEVATIONS

RUSSELL D. PEARLMAN
LICENSED ARCHITECT
6895
6-4-20
SOUTH CAROLINA
RALEIGH, N.C.

DESIGNED BY: RDP
DRAWN BY: RTP
CHECKED BY: RDP
PROJECT NO.: 3081-AB
DATE: JUNE 7, 2020
SCALE: AS NOTED

SHEET 35 OF 181

A120

pdf2013.pltcfg
0:1.0000 mi:in / in.
rpowell
6/9/2020 1:06:55 PM
T:\Projects\Brunswick_Regional_W&S_H2GO-3081\AB-Water_Supply&Treatment_Plant\Sheets\WTP\A-Sheets-RO.dgn

A130

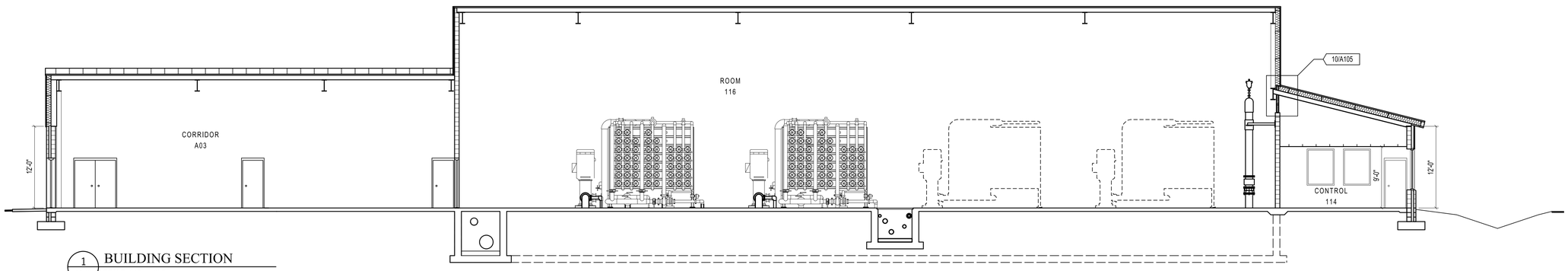

1 A130 BUILDING SECTION
SCALE: 1/8" = 1'-0"

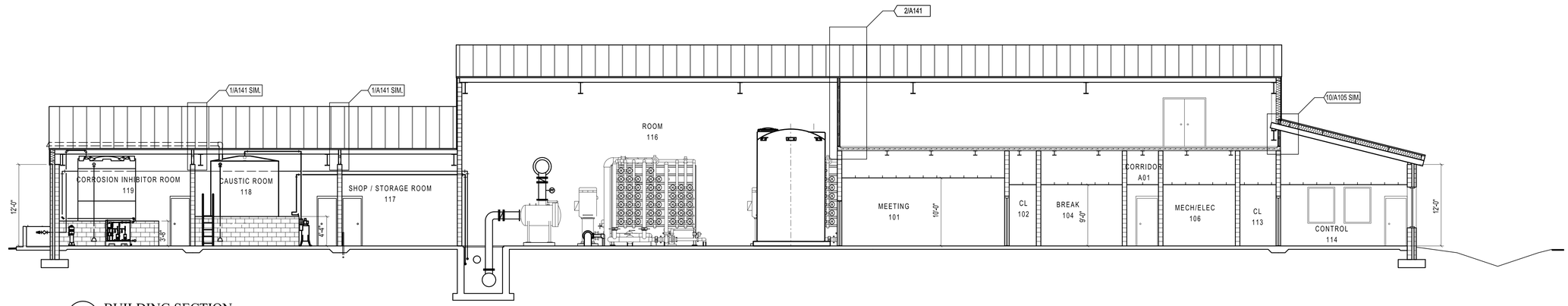

2 A130 BUILDING SECTION
SCALE: 1/8" = 1'-0"

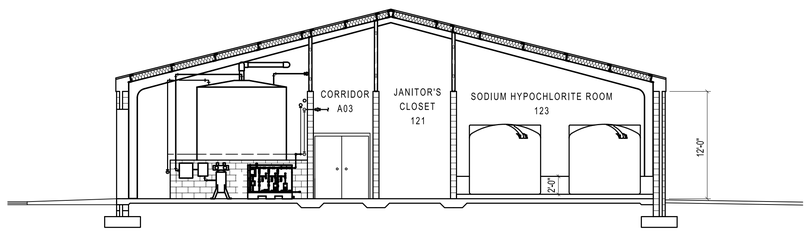

3 A130 BUILDING SECTION
SCALE: 1/8" = 1'-0"

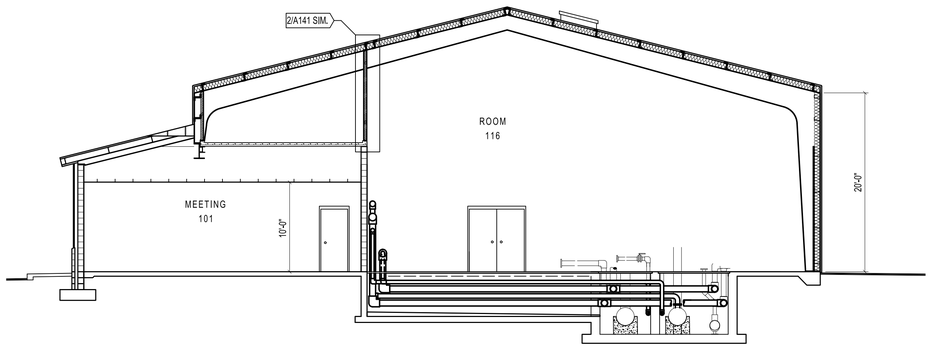

4 A130 BUILDING SECTION
SCALE: 1/8" = 1'-0"

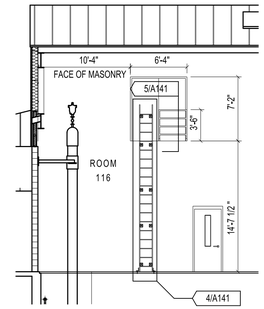

5 A130 PARTIAL INTERIOR ELEVATION
SCALE: 1/8" = 1'-0"

REVISIONS

THE WOOTEN COMPANY
120 North Boylan Avenue Raleigh, NC 27603-1423
919.828.0531 Fax 919.834.3389
License Number: F-1015

BRUNSWICK REGIONAL WATER AND SEWER H2GO
BRUNSWICK COUNTY NORTH CAROLINA
CONTRACT No. 4
REVERSE OSMOSIS WATER TREATMENT PLANT

BUILDING SECTIONS

RUSSELL D. PEARLMAN
REGISTERED ARCHITECT
6895
6.4.20
SOUTH CAROLINA
RALEIGH, N.C.

DESIGNED BY: RDP
DRAWN BY: RTP
CHECKED BY: RDP
PROJECT NO.: 3081-AB
DATE: JUNE 7, 2020
SCALE: AS NOTED

SHEET 36 OF 181

A130

pdf2013.pltcfg
0.1.0000 " / in.
rpowell
1:07:41 PM
6/9/2020
T:\Projects\Brunswick_Regional_W&S_H2GO-3081\AB-Water_Supply&Treatment_Plant\Sheets\WTP\A-Sheets-RO.dgn

A140

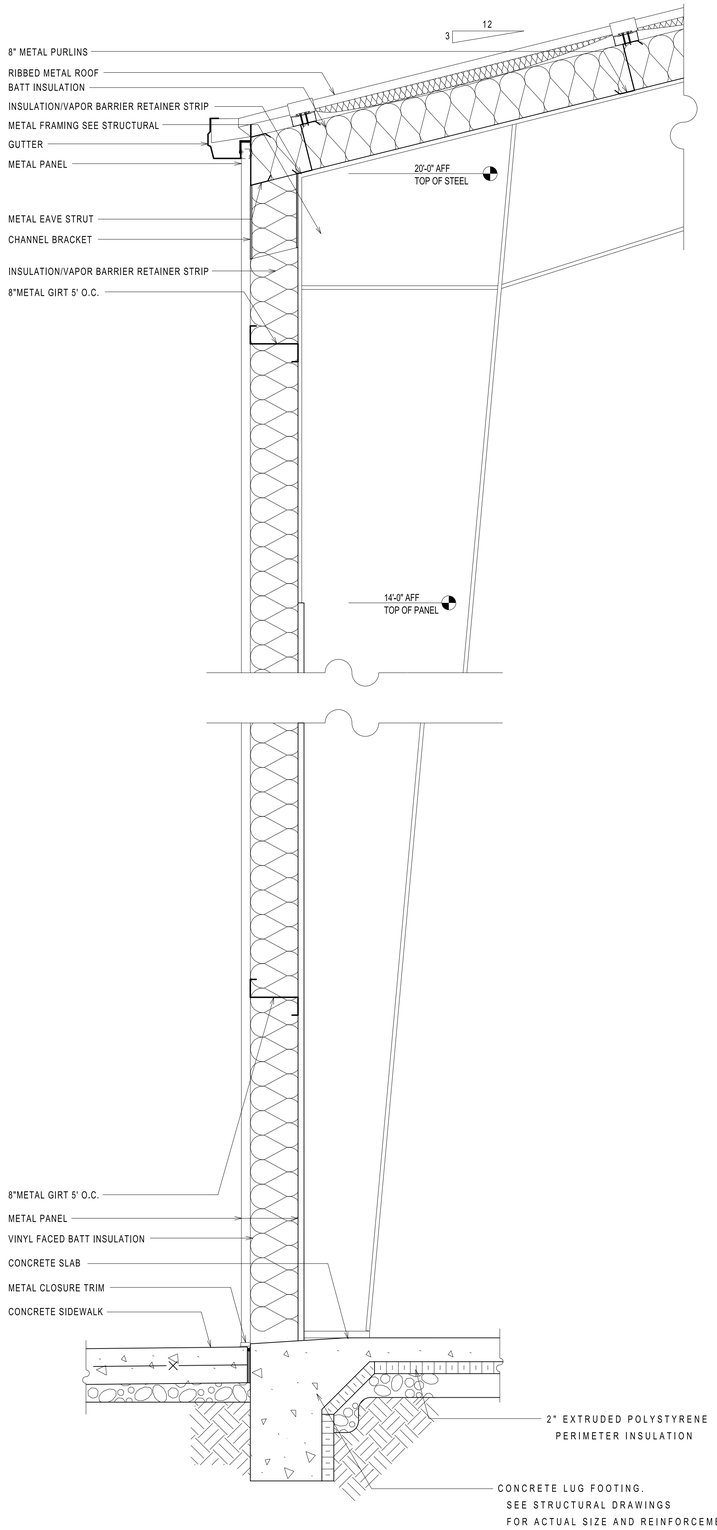

1 A140 WALL SECTION
SCALE: 1" = 1'-0"

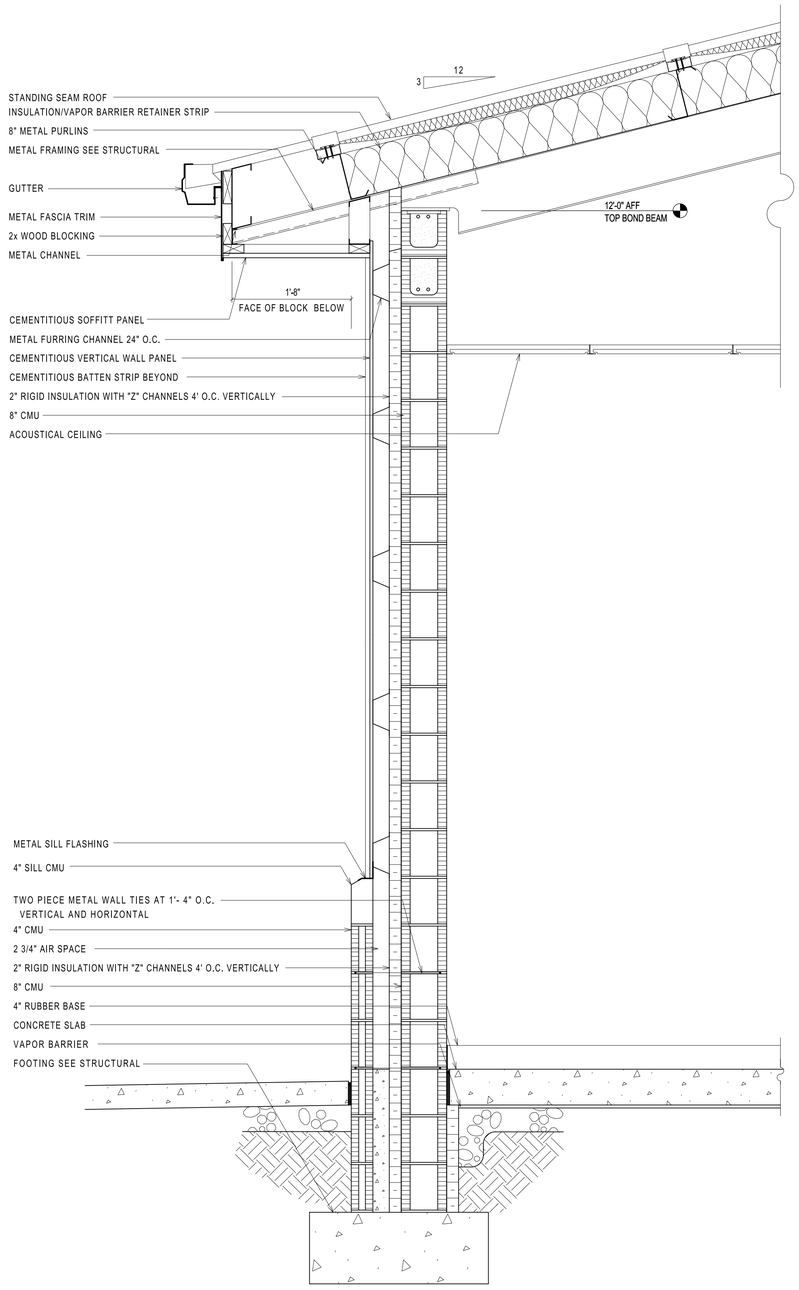

2 A140 WALL SECTION
SCALE: 1" = 1'-0"

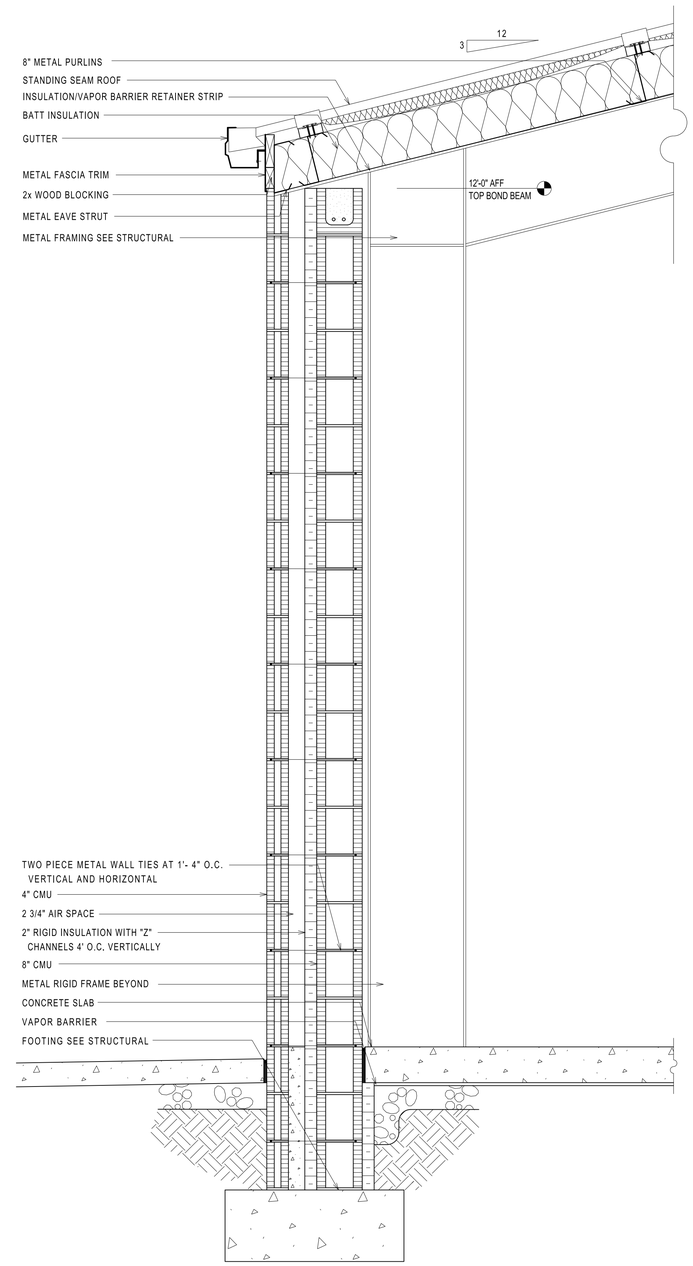

3 A140 WALL SECTION
SCALE: 1" = 1'-0"

REVISIONS

THE WOOTEN COMPANY
120 North Boylan Avenue Raleigh, NC 27603-1423
919.828.0531 Fax 919.834.3389
License Number: F-1015

BRUNSWICK REGIONAL WATER AND SEWER H2GO
BRUNSWICK COUNTY NORTH CAROLINA
CONTRACT No. 4
REVERSE OSMOSIS WATER TREATMENT PLANT

WALL SECTIONS

RUSSELL D. PEARLMAN
REGISTERED ARCHITECT
6895
6.4.20
SOUTH CAROLINA
RALEIGH, N.C.

DESIGNED BY: RDP
DRAWN BY: RTP
CHECKED BY: RDP
PROJECT NO.: 3081-AB
DATE: JUNE 7, 2020
SCALE: AS NOTED

SHEET 37 OF 181

A140

pdf2013.pltcfg
0.1.0000 "=" in.
rpowell
6/9/2020 1:08:19 PM
T:\Projects\Brunswick_Regional_W&S_H2GO-3081\AB-Water_Supply&Treatment_Plant\Sheets\WTP\A-Sheets-RO.dgn

A141

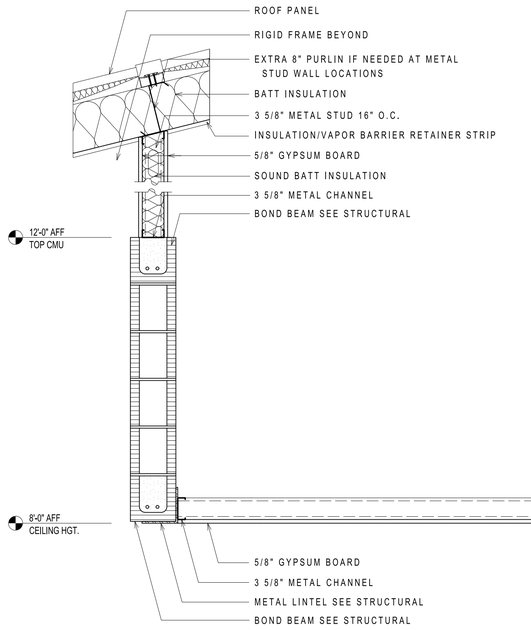

1 A141 PARTIAL WALL SECTION
SCALE: 1" = 1'-0"

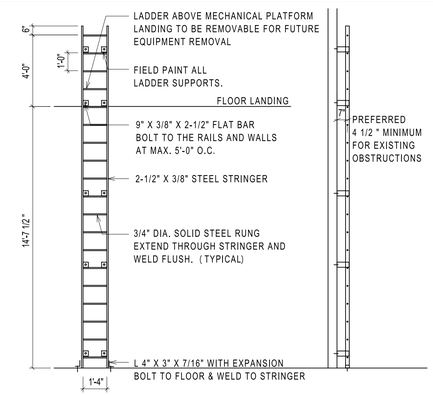

4 A141 MECHANICAL PLATFORM ACCESS LADDER ELEVATION
SCALE: 1/4" = 1'-0"

GENERAL NOTES (LADDER)

1. PRIME & PAINT ALL STEEL SURFACES. PAINT COLOR: SAFETY YELLOW
2. GRIND ALL WELDS SMOOTH.
3. FIELD VERIFY ALL DIMENSIONS AND EXISTING CONDITIONS.

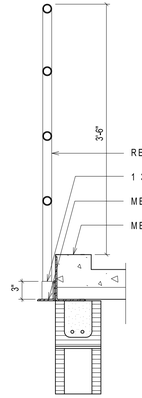

5 A141 HANDRAIL DETAIL
SCALE: 1" = 1'-0"

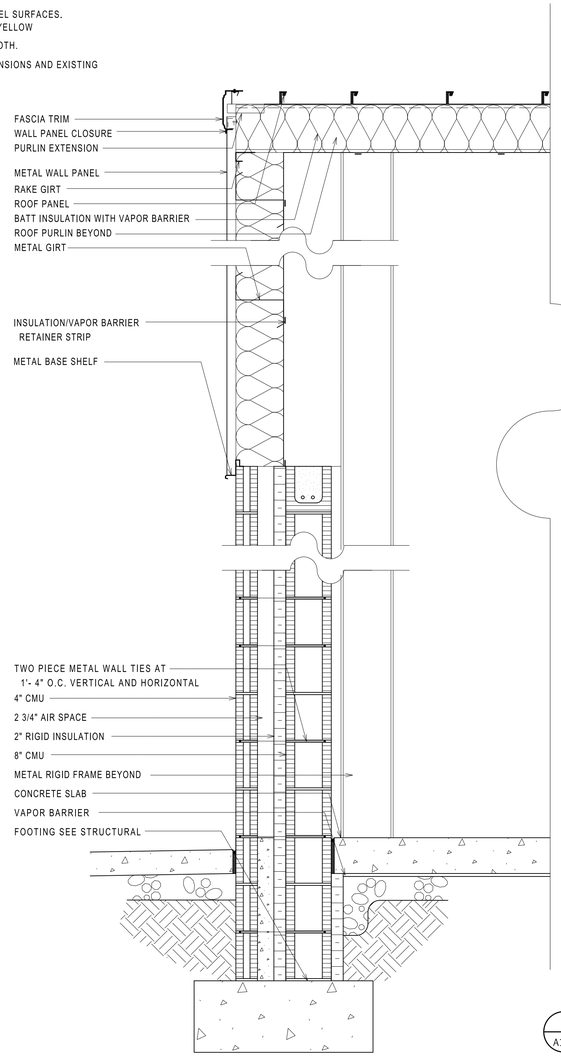

3 A141 WALL SECTION
SCALE: 1" = 1'-0"

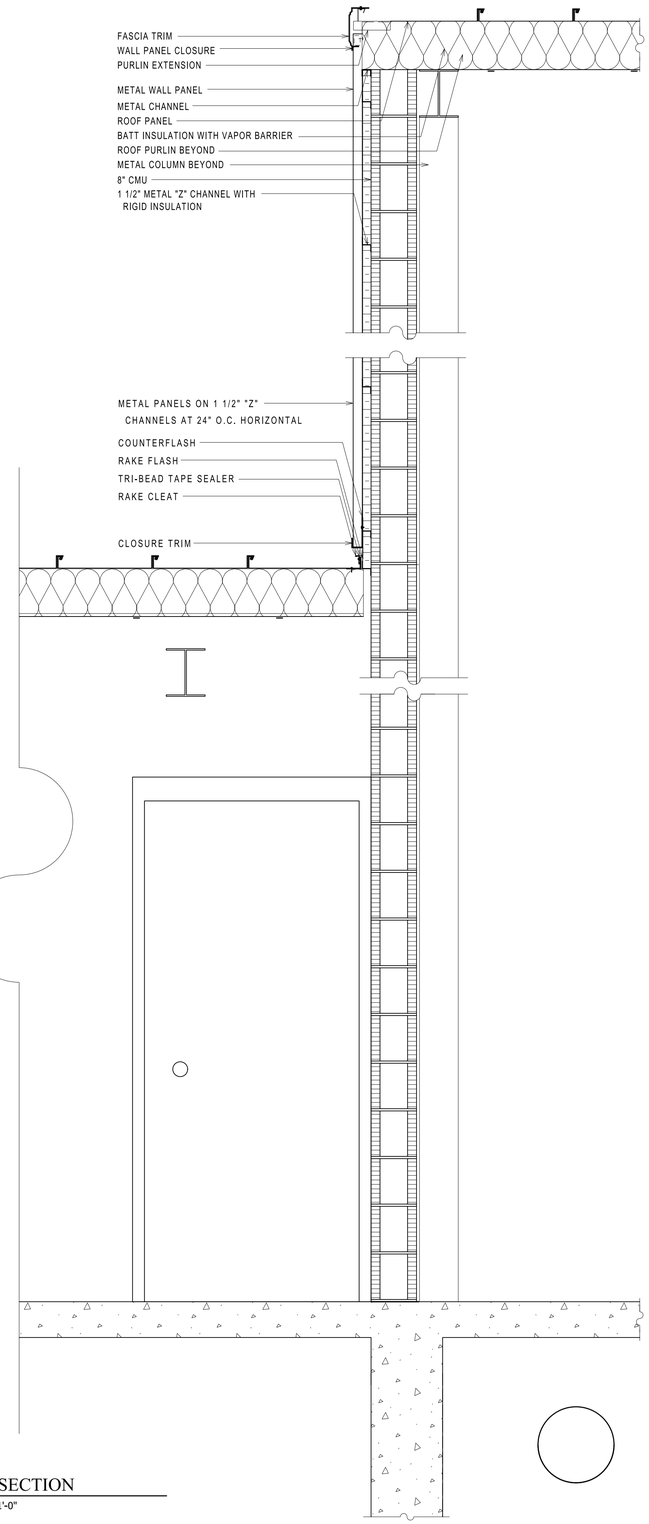

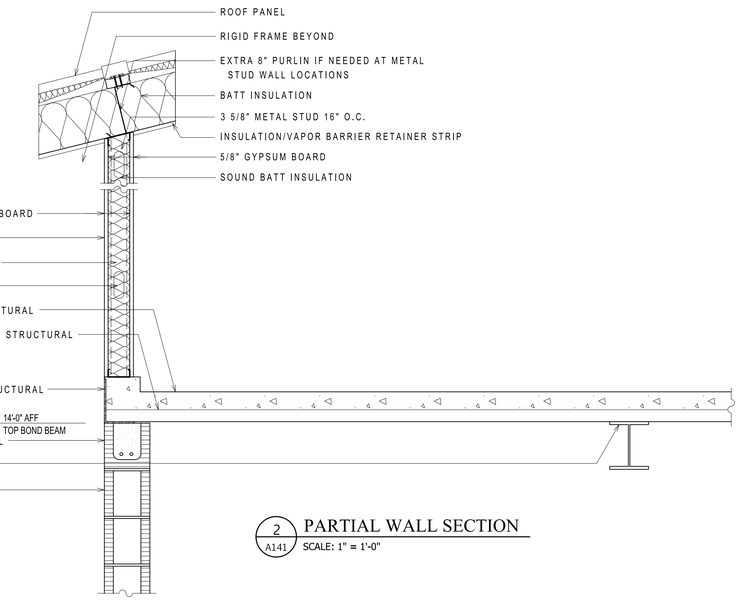

2 A141 PARTIAL WALL SECTION
SCALE: 1" = 1'-0"

REVISIONS

THE WOOTEN COMPANY
120 North Boylan Avenue Raleigh, NC 27603-1423
919.828.0531 Fax 919.834.3589
License Number: F-1015

BRUNSWICK REGIONAL WATER AND SEWER H2GO
BRUNSWICK COUNTY NORTH CAROLINA
CONTRACT No. 4
REVERSE OSMOSIS WATER TREATMENT PLANT

WALL SECTIONS

RUSSELL D. PEARLMAN
REGISTERED ARCHITECT
6895
6.4.20
SOUTH CAROLINA
RALEIGH, N.C.

DESIGNED BY: RDP
DRAWN BY: RTP
CHECKED BY: RDP
PROJECT NO.: 3081-AB
DATE: JUNE 7, 2020
SCALE: AS NOTED

SHEET 38 OF 181

A141

pdf2013.pltcfg
0:1.0000 "=" / in.
rpowell
6/9/2020 1:09:03 PM
T:\Projects\Brunswick_Regional_W&S_H2GO-3081\AB-Water_Supply&Treatment_Plant\Sheets\WTP\A-Sheets-RO.dgn

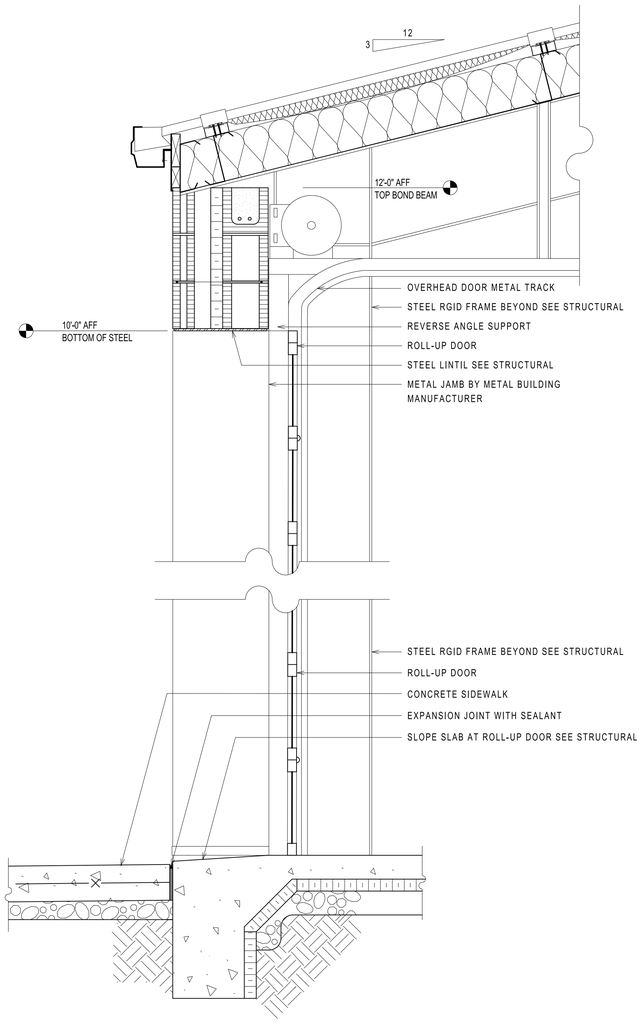

1 A142 WALL SECTION
SCALE: 1" = 1'-0"

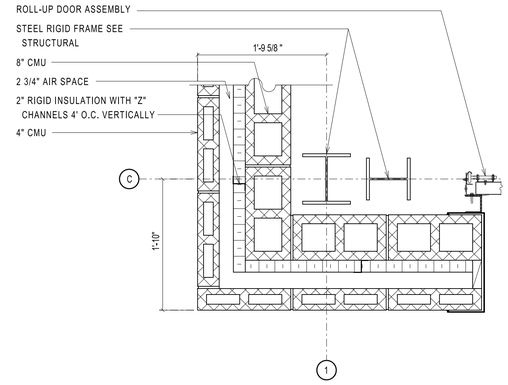

2 A142 WALL DETAIL
SCALE: 1" = 1'-0"

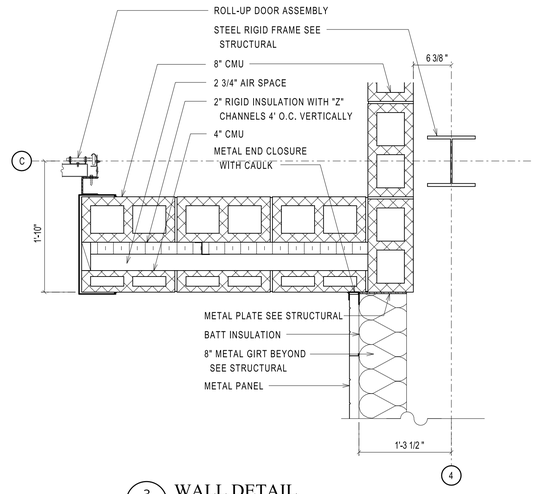

3 A142 WALL DETAIL
SCALE: 1" = 1'-0"

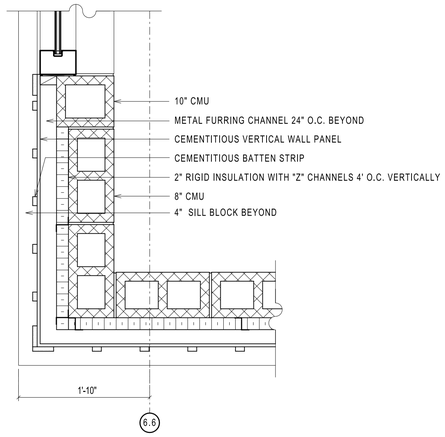

4 A142 WALL DETAIL
SCALE: 1" = 1'-0"

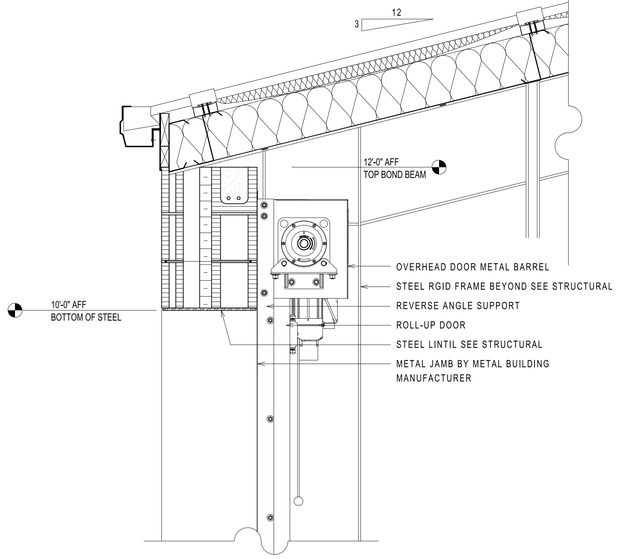

5 A142 COILING DOOR HEAD DETAIL
SCALE: 1" = 1'-0"

REVISIONS

THE WOOTEN COMPANY
120 North Boylan Avenue Raleigh, NC 27603-1423
919.828.0531 Fax 919.831.1589
License Number: F-1015

BRUNSWICK REGIONAL WATER AND SEWER H2GO
BRUNSWICK COUNTY NORTH CAROLINA
CONTRACT No. 4
REVERSE OSMOSIS WATER TREATMENT PLANT

WALL SECTIONS AND WALL DETAILS

RACHEL D. PEARLMAN
REGISTERED ARCHITECT
6895
6.4.20
SOUTH CAROLINA
RALEIGH, N.C.

DESIGNED BY: RDP
DRAWN BY: RTP
CHECKED BY: RDP
PROJECT NO.: 3081-AB
DATE: JUNE 7, 2020
SCALE: AS NOTED

SHEET 39 OF 181

A142

pdf2013.pltcfg
0.1.0000 "=" in.
rpowell
6/9/2020 1:09:40 PM
T:\Projects\Brunswick_Regional_W&S_H2GO-3081\AB-Water_Supply&Treatment_Plant\Sheets\WTP\A-Sheets-RO.dgn

A150

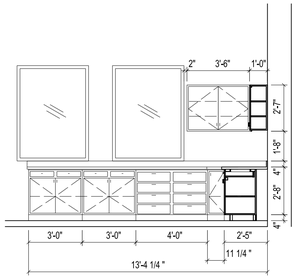

1 A150 CASEWORK ELEVATION
SCALE: 1/4" = 1'-0"

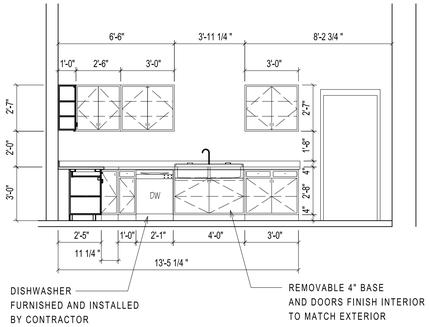

2 A150 CASEWORK ELEVATION
SCALE: 1/4" = 1'-0"

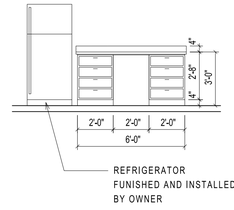

3 A150 CASEWORK ELEVATION
SCALE: 1/4" = 1'-0"

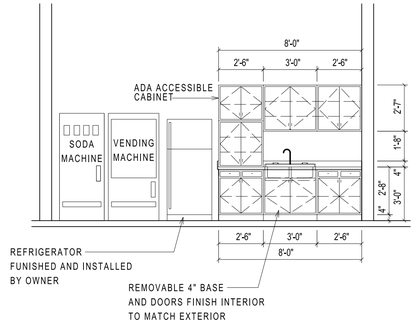

4 A150 CASEWORK ELEVATION
SCALE: 1/4" = 1'-0"

REVISIONS

THE WOOTEN COMPANY
120 North Boylan Avenue Raleigh, NC 27603-1423
919.828.0531 Fax 919.831.1589
License Number: F-1115

BRUNSWICK REGIONAL WATER AND SEWER H2GO
BRUNSWICK COUNTY NORTH CAROLINA
CONTRACT No. 4
REVERSE OSMOSIS WATER TREATMENT PLANT

CASEWORK ELEVATIONS

RUSSELL D. PEARLMAN
REGISTERED ARCHITECT
6895
6.4.20
SOUTH CAROLINA
RALEIGH, N.C.

DESIGNED BY: RDP
DRAWN BY: RTP
CHECKED BY: RDP
PROJECT NO.: 3081-AB
DATE: JUNE 7, 2020
SCALE: AS NOTED

SHEET 40 OF 181

A150

pdf2013.pltcfg
0:1.0000 ":" / in.
rpowell
6/9/2020 1:10:11 PM
T:\Projects\Brunswick_Regional_W&S_H2GO-3081\AB-Water_Supply&Treatment_Plant\Sheets\WTP\A-Sheets-RO.dgn

A160

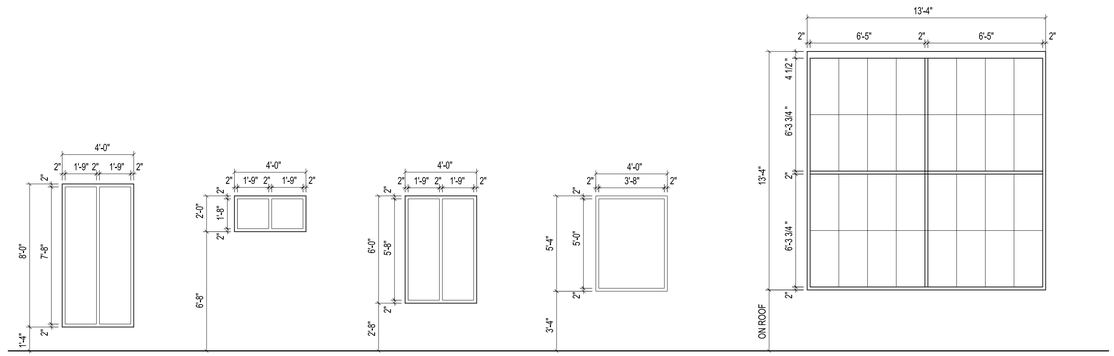

WINDOW TYPES: (A) (B) (C) (D) (E)

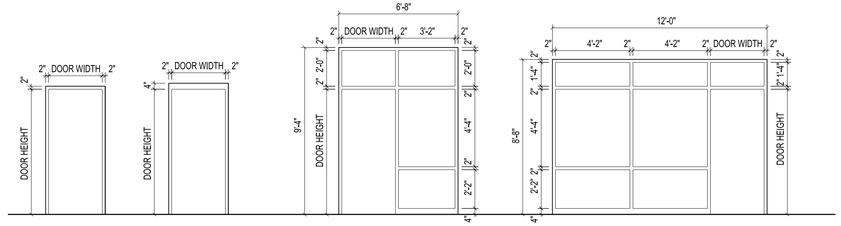

DOOR FRAME TYPES: (1) (2) (3) (4)

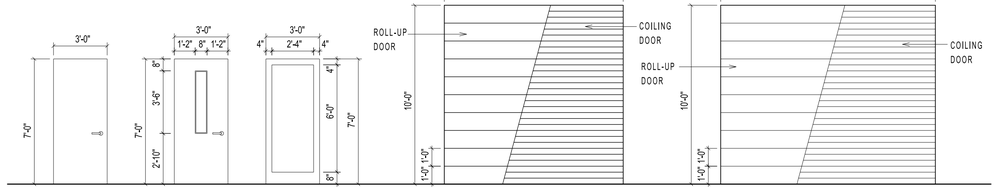

DOOR TYPES: (A) (B) (C) (D) (E)

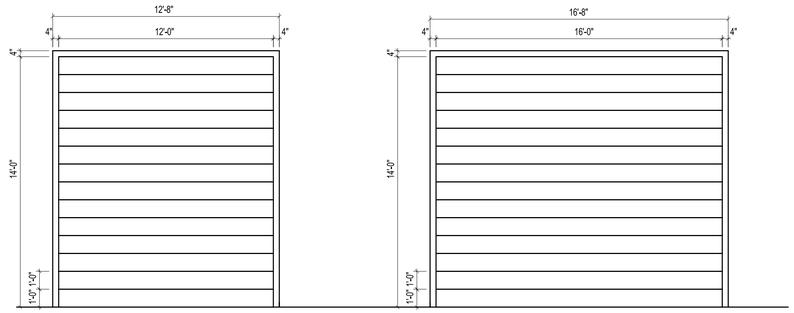

(F) (G)

1 A160 WINDOWS/DOOR ELEVATIONS
SCALE: 1/4" = 1'-0"

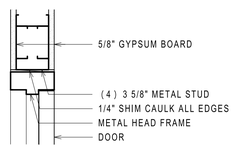

2 A160 DOOR HEAD
SCALE: 1 1/2" = 1'-0"

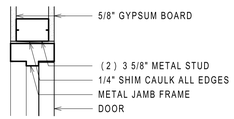

3 A160 DOOR JAMB
SCALE: 1 1/2" = 1'-0"

DOOR SCHEDULE

NO.	DOOR SIZE W	DOOR SIZE H	DOOR SIZE THK	DOOR TYPE	DOOR MATL.	DOOR FIN.	FRAME TYPE	FRAME MATL.	FRAME FIN.	DETAIL HEAD	DETAIL JAMB	DETAIL SILL	GLASS TYPE	LOUVER W	LOUVER H	LOUVER MATL.	THRES MATL.	HW SET	RATING HOUR	RATING LABEL	REMARKS
100	3'-0"	7'-0"	1-3/4"	C	ALUM	COAT	4	ALUM	COAT	13/A161	14/A161	17/A161	1/4" TEMP				ALUM	01			DS
101A	3'-0"	7'-0"	1-3/4"	C	ALUM	COAT	3	ALUM	COAT	1/A161	2/A161		1/4" TEMP					01			DS
101B	3'-0"	7'-0"	1-3/4"	B	FGLS	GEL	2	FGLS	GEL	1/A161	2/A161		1/4" TEMP					02			
101C	3'-0"	7'-0"	1-3/4"	B	FGLS	GEL	2	FGLS	GEL	13/A161	14/A161	17/A161	1/4" TEMP				ALUM	03			
102	(2) 3'-0"	7'-0"	1-3/4"	A	FGLS	GEL	2	FGLS	GEL	1/A161	2/A161							04			
103	(2) 3'-0"	7'-0"	1-3/4"	A	FGLS	GEL	2	FGLS	GEL	1/A161	2/A161							04			
104	3'-0"	7'-0"	1-3/4"	B	FGLS	GEL	2	FGLS	GEL	1/A161	2/A161							05			
105	3'-0"	7'-0"	1-3/4"	A	FGLS	GEL	2	FGLS	GEL	1/A161	2/A161							05			
106	3'-0"	7'-0"	1-3/4"	A	FGLS	GEL	2	FGLS	GEL	1/A161	2/A161							03			
107	3'-0"	7'-0"	1-3/4"	A	FGLS	GEL	2	FGLS	GEL	1/A161	2/A161							06			
108	3'-0"	7'-0"	1-3/4"	A	FGLS	GEL	2	FGLS	GEL	1/A161	2/A161							07			
109	3'-0"	7'-0"	1-3/4"	A	FGLS	GEL	2	FGLS	GEL	1/A161	2/A161							06			
110	3'-0"	7'-0"	1-3/4"	B	FGLS	GEL	2	FGLS	GEL	1/A161	2/A161		1/4" TEMP					03			
111	3'-0"	7'-0"	1-3/4"	A	FGLS	GEL	2	FGLS	GEL	1/A161	2/A161							05			
112	3'-0"	7'-0"	1-3/4"	A	FGLS	GEL	2	FGLS	GEL	1/A161	2/A161							08			
113	3'-0"	7'-0"	1-3/4"	A	FGLS	GEL	2	FGLS	GEL	1/A161	2/A161							05			
114	3'-0"	7'-0"	1-3/4"	B	FGLS	GEL	2	FGLS	GEL	1/A161	2/A161		1/4" TEMP					02			
115A	3'-0"	7'-0"	1-3/4"	B	FGLS	GEL	2	FGLS	GEL	1/A161	2/A161		1/4" TEMP					03			
115B	3'-0"	7'-0"	1-3/4"	B	FGLS	GEL	2	FGLS	GEL	1/A161	2/A161		1/4" TEMP					03			
115C	3'-0"	7'-0"	1-3/4"	B	FGLS	GEL	2	FGLS	GEL	13/A161	14/A161	17/A161	1/4" TEMP				ALUM	09			CARD READER
116A	3'-0"	7'-0"	1-3/4"	B	FGLS	GEL	1	FGLS	GEL	10/A161	11/A161	12/A161	1/4" TEMP				ALUM	10			CARD READER
116B	16'-0"	14'-0"	1-3/4"	G	ALUM	COAT	G	METAL	PAINT	4/A160	5/A160										
116C	16'-0"	14'-0"	1-3/4"	G	ALUM	COAT	G	METAL	PAINT	4/A160	5/A160										
116D	16'-0"	14'-0"	1-3/4"	G	ALUM	COAT	G	METAL	PAINT	4/A160	5/A160										
116E	16'-0"	14'-0"	1-3/4"	G	ALUM	COAT	G	METAL	PAINT	4/A160	5/A160										
116F	3'-0"	7'-0"	1-3/4"	B	FGLS	GEL	1	FGLS	GEL	10/A161	11/A161	12/A161	1/4" TEMP				ALUM	10			CARD READER
116G	12'-0"	14'-0"	1-3/4"	F	ALUM	COAT	F	METAL	PAINT	4/A160	5/A160										
116H	(2) 3'-0"	7'-0"	1-3/4"	B	FGLS	GEL	2	FGLS	GEL	1/A161	2/A161		1/4" TEMP					13	1.5	B	
117A	3'-0"	7'-0"	1-3/4"	B	FGLS	GEL	2	FGLS	GEL	1/A161	2/A161		1/4" TEMP					03			
117B	12'-0"	10'-0"	1-3/4"	E	ALUM	COAT	N/A	N/A	N/A	5/A142	6/A160 SIM.										NO DOOR TRACK
118A	3'-0"	7'-0"	1-3/4"	B	FGLS	GEL	2	FGLS	GEL	1/A161	2/A161		1/4" TEMP					03			
118B	12'-0"	10'-0"	1-3/4"	E	ALUM	COAT	N/A	N/A	N/A	5/A142	6/A160 SIM.										NO DOOR TRACK
119A	3'-0"	7'-0"	1-3/4"	B	FGLS	GEL	2	FGLS	GEL	1/A161	2/A161		1/4" TEMP					03			
119B	12'-0"	10'-0"	1-3/4"	E	ALUM	COAT	N/A	N/A	N/A	5/A142	6/A160 SIM.										NO DOOR TRACK
120	(2) 3'-0"	7'-0"	1-3/4"	A	FGLS	GEL	2	FGLS	GEL	1/A161	2/A161							04			
121	3'-0"	7'-0"	1-3/4"	A	FGLS	GEL	2	FGLS	GEL	1/A161	2/A161							03			
122A	3'-0"	7'-0"	1-3/4"	A	FGLS	GEL	2	FGLS	GEL	1/A161	2/A161							12			
122B	3'-0"	7'-0"	1-3/4"	A	FGLS	GEL	2	FGLS	GEL	15/A161	16/A161	17/A161					ALUM	11			DC
122C	10'-0"	10'-0"	1-3/4"	D	ALUM	COAT	N/A	N/A	N/A	1/A142	6/A160										
123A	3'-0"	7'-0"	1-3/4"	A	FGLS	GEL	2	FGLS	GEL	15/A161	16/A161	17/A161					ALUM	11			DC
123B	10'-0"	10'-0"	1-3/4"	D	ALUM	COAT	N/A	N/A	N/A	1/A142	6/A160										
A01	3'-0"	7'-0"	1-3/4"	B	FGLS	GEL	2	FGLS	GEL	1/A161	2/A161		1/4" TEMP					4			
A03	(2) 3'-0"	7'-0"	1-3/4"	B	FGLS	GEL	2	FGLS	GEL	15/A616	16/A161	17/A161	1/4" TEMP				ALUM	15			
201	(2) 3'-0"	7'-0"	1-3/4"	B	FGLS	GEL	2	FGLS	GEL	2/A160	3/A160							4			

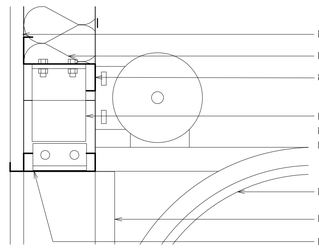

4 A160 DOOR HEAD
SCALE: 1 1/2" = 1'-0"

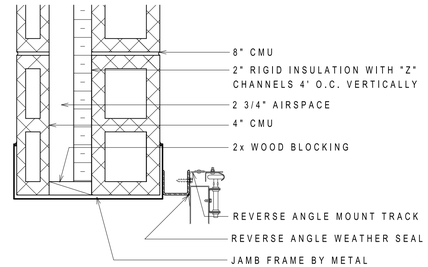

6 A160 DOOR JAMB
SCALE: 1 1/2" = 1'-0"

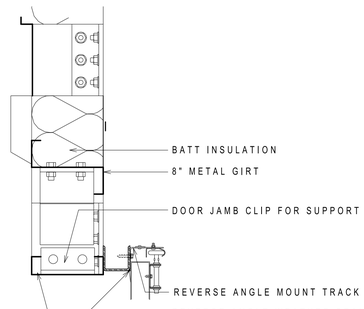

5 A160 DOOR JAMB
SCALE: 1 1/2" = 1'-0"

REVISIONS

THE WOOTEN COMPANY
120 North Boylan Avenue Raleigh, NC 27603-1423
919.828.0531 Fax 919.831.1369
License Number: F-1015

BRUNSWICK REGIONAL WATER AND SEWER H2GO
BRUNSWICK COUNTY NORTH CAROLINA
CONTRACT No. 4
REVERSE OSMOSIS WATER TREATMENT PLANT
WINDOW/DOOR ELEVATIONS

RACHEL D. PEARLMAN
REGISTERED ARCHITECT
6895
6.4.20
SOUTH CAROLINA
RALEIGH, N.C.

DESIGNED BY: RDP
DRAWN BY: RTP
CHECKED BY: RDP
PROJECT NO.: 3081-AB
DATE: JUNE 7, 2020
SCALE: AS NOTED

SHEET 41 OF 181

A160

pdf2013.pltcfg
0.1.0000 "=" in.
rpowell
6:9:2020 1:10:47 PM
T:\Projects\Brunswick_Regional_W&S_H2GO-3081\AB-Water_Supply&Treatment_Plant\Sheets\WTP\A-Sheets-RO.dgn

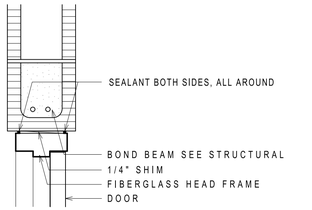

1 A161 **DOOR HEAD**
1 1/2" = 1'-0"

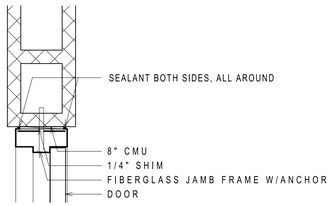

2 A161 **DOOR JAMB**
1 1/2" = 1'-0"

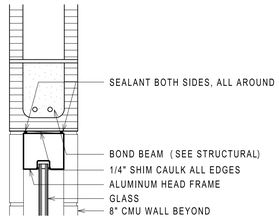

3 A161 **WINDOW HEAD**
1 1/2" = 1'-0"

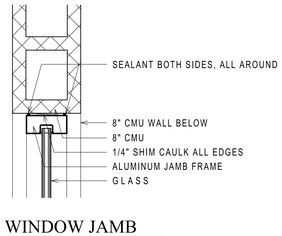

4 A161 **WINDOW JAMB**
1 1/2" = 1'-0"

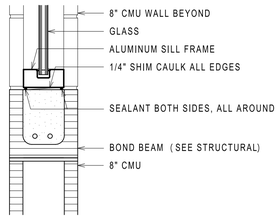

5 A161 **WINDOW SILL**
1 1/2" = 1'-0"

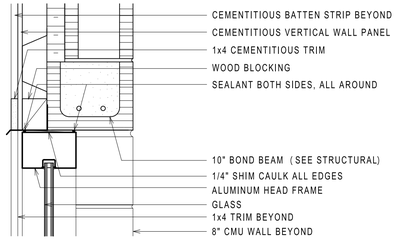

6 A161 **WINDOW HEAD**
1 1/2" = 1'-0"

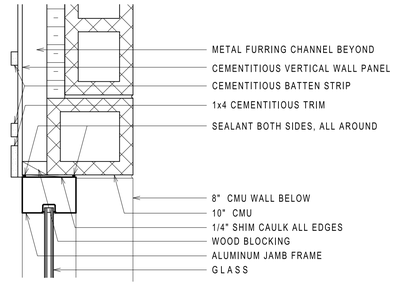

7 A161 **WINDOW JAMB**
1 1/2" = 1'-0"

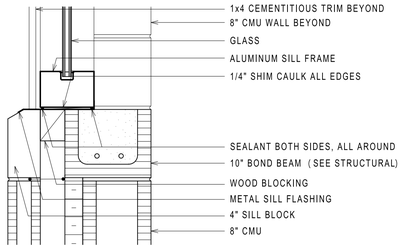

8 A161 **WINDOW SILL**
1 1/2" = 1'-0"

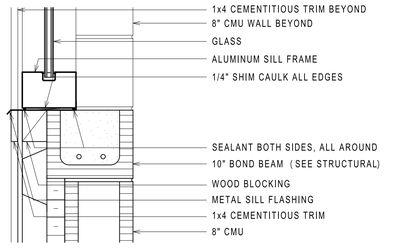

9 A161 **WINDOW SILL**
1 1/2" = 1'-0"

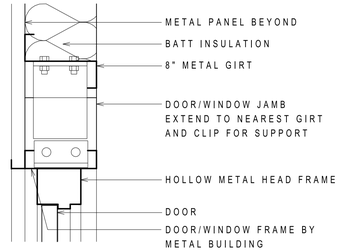

10 A161 **DOOR HEAD**
1 1/2" = 1'-0"

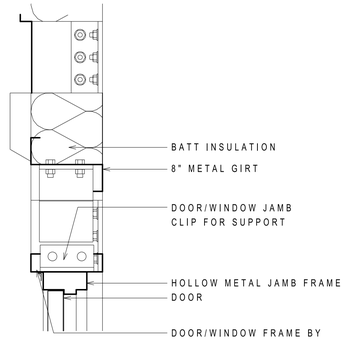

11 A161 **DOOR JAMB**
1 1/2" = 1'-0"

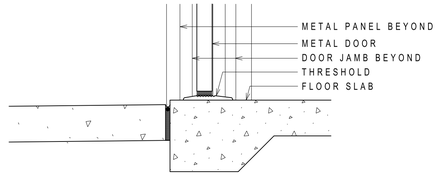

12 A161 **DOOR THRESHOLD**
1 1/2" = 1'-0"

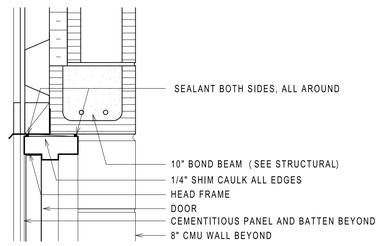

13 A161 **DOOR HEAD**
1 1/2" = 1'-0"

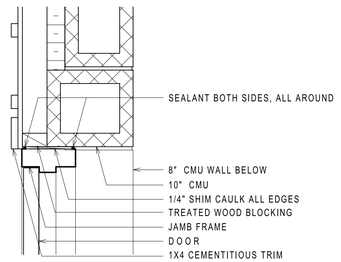

14 A161 **DOOR JAMB**
1 1/2" = 1'-0"

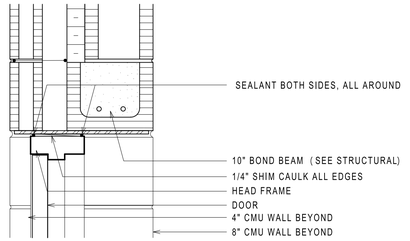

15 A161 **DOOR HEAD**
1 1/2" = 1'-0"

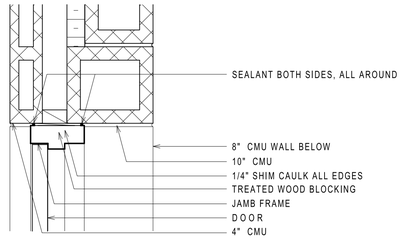

16 A161 **DOOR JAMB**
1 1/2" = 1'-0"

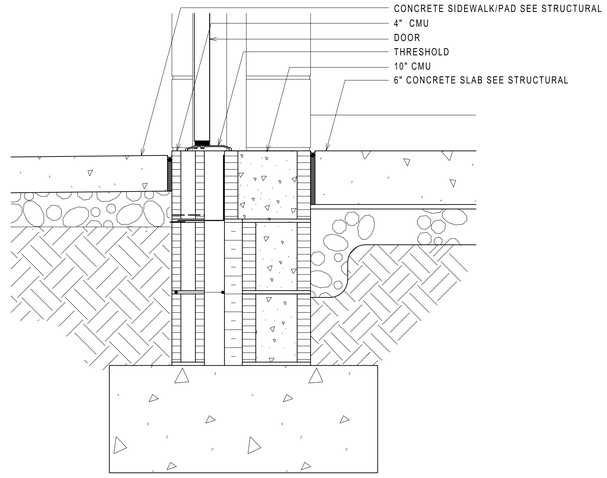

17 A161 **DOOR THRESHOLD**
1 1/2" = 1'-0"

REVISIONS

THE WOOTEN COMPANY
120 North Boylan Avenue Raleigh, NC 27603-1423
919.828.0531 Fax 919.831.1589
License Number: F-0115

BRUNSWICK REGIONAL WATER AND SEWER H2GO
BRUNSWICK COUNTY NORTH CAROLINA
CONTRACT No. 4
REVERSE OSMOSIS WATER TREATMENT PLANT

WINDOW/DOOR DETAILS

DANIEL D. PEARLMAN
REGISTERED ARCHITECT
6895
6.4.20
SOUTH CAROLINA
RALEIGH, N.C.

DESIGNED BY: RDP
DRAWN BY: RTP
CHECKED BY: RDP
PROJECT NO.: 3081-AB
DATE: JUNE 7, 2020
SCALE: AS NOTED

SHEET 42 OF 181

A161

pdf2013.pltcfg
0:1.0000 "-" / in.
rpowell
6/9/2020 1:11:29 PM
T:\Projects\Brunswick_Regional_W&S_H2GO-3081\AB-Water_Supply&Treatment_Plant\Sheets\WTP\A-Sheets-RO.dgn

DocuSign Envelope ID: ACC6BB65-592B-4B43-85C5-EED2086248C7

P100

PLUMBING TOTAL CONNECTED LOAD

DRAINAGE FIXTURE UNITS	29.5
WATER FIXTURE UNITS	29.0
GPM	42.0

NOTES:
1. SUPPLY SYSTEM PREDOMINATLY FOR FLUSH VALVES

SYSTEM NO. CAJ1601

SEPTEMBER 14, 2010
F RATING - 3 HR
T RATING - 2 AND 3 HR
L RATING AT AMBIENT - 1 CFM/SQ FT
L RATING AT 400 F - LESS THAN 1 CFM/SQ FT

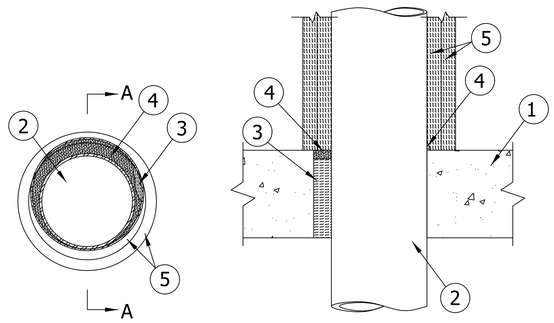

SECTION A-A

1. FLOOR OR WALL ASSEMBLY - MIN 4-1/2 IN. (114 MM) THICK REINFORCED LIGHTWEIGHT OR BE CONSTRUCTED OF ANY UL CLASSIFIED CONCRETE BLOCKS*. MAX DIAM OF OPERNING 12 IN. (305 MM).

2. THROUGH-PENETRANT - ONE METALLIC PIPE OR CONDUIT TO BE INSTALLED EITHER CONCENTRICALLY OR ECCENTRICALLY WITHIN THE FIRESTOP SYSTEM. THE ANNULAR SPACE BETWEEN THE THROUGH PENETRANT AND THE PERIPHERY OF OPENING SHALL BE MIN 0 IN. (POINT CONTACT) TO A MAX 1-7/8 IN. (48 MM). PENETRANT TO BE RIGIDLY SUPPORTED ON BOTH SIDES OF FLOOR OR WALL ASSEMBLY. THE FOLLOWING TYPES AND SIZES OF METALLIC PIPE OR CONDUIT MAY BE USED:

A. STEEL PIPE - NOM 10 IN. (254 MM) DIAM (OR SMALLER) SCHEDULE 10 (OR HEAVIER) STEEL PIPE.
B. IRON PIPE - NOM 10 IN. (254 MM) DIAM (OR SMALLER) CAST OR DUCTILE IRON PIPE.
C. STEEL CONDUIT - NOM 6 IN. (152 MM) DIAM (OR SMALLER) RIGID STEEL CONDUIT OR NOM 4 IN. (102 MM) DIAM (OR SMALLER) ELECTRICAL METALLIC TUBING.
D. COPPER TUBE - NOM 6 IN. (152 MM) DIAM (OR SMALLER) TYPE L (OR HEAVIER) COPPER TUBE.
E. COPPER PIPE - NOM 6 IN. (152 MM) DIAM (OR SMALLER) REGULAR (OR HEAVIER) COPPER PIPE.

3. PACKING MATERIAL - MIN 4 IN. (102 MM) THICKNESS OF MIN 4 PCF MINERAL WOOL FIRMLY PACKED INTO OPENING AS A PERMANENT FORM. PACKING MATERIAL TO BE RECESSED OF WALL TO ACCOMMODATE THE REQUIRED THICKNESS OF FILL MATERIAL (ITEM 4).

4. FILL, VOID OR CAVITY MATERIALS* - CAULK - FILL MATERIAL APPLIED TO A MIN DEPTH OF ½ IN. (13 MM) FLUSH WITH TOP SURFACE OF FLOOR OR WITH BOTH SURFACES OF WALL. A MIN , IN. (6 MM) BEAD OF FILL MATERIAL TO BE APPLIED AT AREA OF POINT CONTACT.

5. DUCT WRAP MATERIAL* - TWO LAYERS OF NOM 2 IN. (51 MM) THICK FIBERGLASS DUCT WRAP, MIN 1 PCF (16KG/M³)(4) TIGHTLY WRAPPED AROUND PENETRANT AND TIGHTLY BUTTED TO THE TOP SURFACE OF THE FLOOR OR BOTH SIDES OF WALL TO EXTEND ABOVE FLOOR OR PAST BOTH SIDES OF WALL AS SHOWN IN THE TABLE BELOW. ALL LONGITUDINAL SEAMS OF BOTH LAYERS OF DUCT WRAP ARE SEALED WITH FOIL TAPE.

WHEN DUCT WRAP IS USED, T RATING IS DEPENDENT ON THE CRITERIA SHOWN IN THE TABLE BELOW.

MAX PIPE SIZE, IN. (MM)	PIPE/TUBE TYPE	MIN INSULATION HEIGHT, IN. (MM)	MIN INSULATION HEIGHT, IN. (MM)	T RATING
		INNER LAYER	OUTER LAYER	
4 (102)	STEEL, IRON OR CONDUIT	12 (305)	12 (305)	3
4 (102)	COPPER	24 (610)	12 (305)	3
6 (152)	ALL	24 (610)	12 (305)	2
10 (254)	STEEL OR IRON	24 (610)	24 (610)	2

SEE BATTS AND BLANKETS (BKNV) CATEGORY IN THE BUILDING MATERIALS DIRECTORY FOR NAMES AND MANUFACTURERS. ANY BATTS AND BLANKETS MATERIAL MEETING THE ABOVE SPECIFICATIONS AND BEARING THE UL CLASSIFICATION MARKING WITH FLAME SPREAD INDEX OF 25 OR LESS AND A SMOKE DEVELOPED INDEX OF 50 OR LESS MAY BE USED.

*BEARING THE UL CLASSIFICATION MARK

1 / P100 3-HR RATED PENETRATION DETAIL
NOT TO SCALE

PLUMBING FIXTURE SCHEDULE

MARK	DESCRIPTION	WASTE	C.W.	H.W.	REMARKS
P-1	WATER CLOSET (ADA)	4"	1"	-	FLOOR MOUNTED, VITREOUS CHINA, MOUNT LIP 17-19" AFF, USE LOW CONSUMPTION (1.6 gpf) FLUSHOMETER FOR TOP SPUD MOUNTING
P-2	LAVATORY (ADA)	1-1/2"	1/2"	1/2"	WALL MOUNTED CAST IRON BATHROOM SINK, INSTALL W/ LIP 34" AFF, SINGLE HANDLE CHROME FAUCET, SOLID BRASS BODY, MAX FLOW 1.5 gpm
P-3	KITCHEN HAND SINK	1-1/2"	1/2"	1/2"	DOUBLE BOWL COUNTERTOP SINK, REFER TO SPECIFICATIONS FOR BOWL CONSTRUCTION, W/ DECK MOUNTED SINGLE LEVER FAUCET
P-4	MOP RECEPTOR	-	3/4"	3/4"	36x36x12 MOP SERVICE BASIN, SHOULDERS NOT LESS THAN 9-3/4" HIGH INSIDE, 6" DROP AT THRESHOLD
P-5	HOSE BIBB	-	3/4"	-	WALL FAUCET, ANTI-SIPHON VACUUM BREAKER PROTECTED, PROVIDE CHROME WALLBOX/DOOR ASSEMBLY
P-6	FLOOR DRAIN	3"	-	-	FLOOR DRAIN, ROUND TOP STRAINER HEAD, REVERSIBLE FLASHING COLLAR, INSTALL 1/2" BELOW FINSHED FLOOR HEIGHT, W/ COMMERCIAL GRADE EPDM TRAP SEAL
P-7	ANTI-FREEZE HYDRANT	-	3/4"	-	FREEZELESS WALL HYDRANT, AUTOMATIC DRAINING W/ HOSE CONNECTION AND ANTI-SIPHON VACUUM BREAKER
P-8	FLOOR CLEANOUT	3"	-	-	ADJUSTABLE LEVELING FLOOR CLEANOUT, COATED CAST IRON BODY, GAS AND WATERTIGHT TAPERED THREAD PLUG, SCORIATED NICKEL BRONZE COVER
P-9	SHOWER (ADA)	2"	1/2"	1/2"	SINGLE HANDLE PRESSURE BALANCING MIXING SHOWER UNIT, CONTROL CARTRIDGE W/ STAINLESS STEEL BALANCING PISTON
P-10	DRINKING FOUNTIAN (ADA)	2"	1/2"	-	BI-LEVEL DRINKING FOUNTAIN, ONE PIECE NON-CORROSIVE STAINLESS STEEL, ONE PIECE CHROME VANDAL RESISTANT BUBBLER, PUSHBUTTON ACTIVATION
P-11	WATER SUPPLY WALL BOX	-	1/2"	-	RECESSED ICE MAKER SUPPLY VALVE BOX, 2-3/8" DEEP, 1/2" VALVE NSF61 COMPLIANT
P-12	SAFETY SHOWER	F.D.	1-1/4" TEPID		EMERGENCY SHOWER/EYEWASH, SHOWER INSTALLATION IN ACCORDANCE WITH ANSI 358.1
P-13	WATER HEATER	-	3/4"	3/4"	120 GALLON COMMERCIAL WATER HEATER, GLASS LINED TANK W/ , 480 VOLTS 3-PHASE POWER SUPLY, ADJUSTABLE THERMOSTAT SET AT 130°F, 12kW SIMULTANEOUS OPERATION
P-14	WALL CLEANOUT	4"	-	-	INTERIOR FINISHED WALL AREA LINE TYPE CLENOUT,LAQUERED CAST IRON ROUND ADJUSTABLE WITH TAPER THREAD BRONZE PLUG, SCORIATED NICKEL BRONZE COVER
P-15	INLINE CIRCULATOR PUMP	-	-	1"	BRONZE CASING INLINE CIRCULATION PUMP, RATED FOR 125psig WORKING PRESSURE, 8 gpm AT 15 ft. HEAD, 115 VOLTS SINGLE PHASE, 1-1/2 hp MOTOR
P-16	SAFETY SHOWER (PLASTIC)	F.D.	1-1/4" TEPID		CORROSION RESISTANT PLASTIC EMERGENCY SHOWER/EYEWASH, SHOWER INSTALLATION IN ACCORDANCE WITH ANSI 358.1, WITH INSTANTANEOUS WATER HEATER 54 kW, 480 VOLTS, 65 AMPS
P-17	TANKLESS WATER HEATER	EXT	2"	-	54 Kw TANKLESS WATER HEATER, 25 gpm, 480 VOLTS, MAX AMPERAGE 65, ASME HEAT EXCHANGER, ANSI COMPLIANT, NEMA 4 ENCLOSURE

SHOCK ARRESTOR SCHEDULE

MANUFACTURER	M/N	P.D.I. UNITS	WFU	PIPE SIZE	ARRSTOR LENGTH
ZURN SHOCKTROL	Z-1700 SERIES #300	A	33-60	1"	5"

NOTES:
1. REFER TO MANUFACTURES RECOMMENDATIONS FOR SIZING OF SHOCK ARRESTORS ON PIPE LENGTHS GREATER THAN 25'
2. SHOCK ARRESTORS TO BE ALL STAINLESS STEEL CONSTRUCTION
3. SHOCK ARRESTORS TO BE BELLOWS TYPE

PLUMBING LEGEND

SYMBOL		DESCRIPTION
	W	SOIL, WASTE OR SANITARY SEWER PIPING
	W	SOIL, WASTE OR SANITARY SEWER PIPING (BELOW GRADE)
	V	VENT PIPING (ABOVE AND BELOW GRADE)
	CW	COLD WATER PIPING
	HW	HOT WATER PIPING
	TW	TEPID WATER
	CO	CLEAN OUT
	FD	FLOOR DRAIN
	VTR	VENT THRU ROOF
		GATE VALVE
		BALL VALVE
		CIRCUIT SETTER
	SA-	SHOCK ARRESTOR
		LINE TURNING DOWN
		LINE UP
		DIRECTIONAL ARROW
		CHECK VALVE
		END OF LINE CLEANOUT
		HOSE BIBB, ANTI-FREEZE HYDRANT
		PIPE CAP
P-6		PLUMBING FIXTURE NUMBER
		PIPE UNION
		RECIRCULATION PUMP
	AFF	ABOVE FINISHED FLOOR
	AFG	ABOVE FINISHED GRADE
	DN	DOWN
	HWR	HOT WATER RETURN
	BFF	BELOW FINISHED FLOOR
	BFG	BELOW FINISHED GRADE
		EMERGENCY SHOWER W/ EYEWASH STATION

PLUMBING GENERAL NOTES:

1. COORDINATE FLOOR DRAIN AND CLEANOUT LOCATIONS IN MECHANICAL ROOMS WITH OTHER TRADES PRIOR TO INSTALLATION

2. SET FLOOR DRAINS 1/2" LOWER THAN FINISHED FLOOR ELEVATION, PROVIDE TRAP SEAL OF COMMERCIAL GRADE EPDM

3. COORDINATE ALL PLUMBING BELOW SLAB PIPING WITH GENERAL CONTRACTOR PRIOR TO FOOTING INSTALLATION TO ASSURE COORDINATION OF PIPE INVERTS WITH FOOTING ELEVATIONS

4. ALL ABOVE SLAB PIPING SHALL BE FIELD COORDINATED WITH OTHER TRADES PRIOR TO INSTALLATION. INSTALLATION DISCREPANCIES SHALL BE DISCUSSED WITH ENGINEER PRIOR TO INSTALLATION.

5. ALL ABOVE CEILING PIPING SHALL BE SUPPORTED BY BAR JOIST WITH ANGLE OR CHANNEL. ABSOLUTELY NO PIPING SHALL BY SUPPORTED BY BAR JOIST BRIDGING OR ROOF DECK.

6. ALL EXTERIOR PIPING INVERTS SHALL BE COORDINATED WITH UTILITIES & FINAL GRADES. THIS CONTRACTOR SHALL ADJUST INVERTS AS NECESSARY TO MAINTAIN A MINIMUM COVER OF 1'-6".

7. THIS CONTRACTOR SHALL; VISIT THE PREMISES AND THOROUGHLY FAMILIARIZE HIMSELF WITH ALL DETAILS OF THE WORK AND WORKING CONDITIONS, VERIFY CONDITIONS IN THE FIELD, DETERMINE THE EXACT LOCATIONS OF LINES, PIPE MATERIALS AND STRUCTURES, AND ADVISE THE ENGINEER OF ANY DISCREPANCY THAT MAY PREVENT OR HINDER THE SPECIFIED WORK FROM BEING COMPLETED.

8. ALL WORK SHALL CONFORM TO THE REQUIREMENTS OF THE NORTH CAROLINA STATE BUILDING CODE AND LOCAL CODES. THIS WORK SHALL INCLUDE ADDITIONAL CLEANOUTS, SHOCK ARRESTORS, VACUUM BREAKERS, FITTINGS, VALVES AND OTHER APPURTENANCES REQUIRED FOR A COMPLETE OPERATIONAL PLUMBING SYSTEM. PROVISION OF THESE ITEMS SHALL BE PROVIDED IN THIS CONTRACT AT NO ADDITIONAL COST TO THE OWNER.

9. CONTRACTOR SHALL INVESTIGATE THE STRUCTURE & FINISH CONDITIONS AFFECTING PLUMBING WORK AND SHALL ARRANGE WORK ACCORDINGLY , PROVIDING ACCESSORIES, HANGERS, ANCHORS AS MAY BE REQUIRED TO MEET SUCH CONDITIONS WITHOUT ADDITIONAL COST TO THE OWNER.

10. ANY DAMAGE INCURRED ON STRUCTURAL STEEL FIRE PROOFING OR FIRE RATED PARTITIONS DUE TO THE INSTALLATION OF PLUMBING PIPING SHALL BE REPAIRED BY OTHERS AT THE EXPENSE OF THIS CONTRACTOR.

11. UNLESS OTHERWISE INDICATED THIS CONTRACTOR IS RESPONSIBLE FOR ALL CORE DRILLING AND PATCHING REQUIRED TO INSTALL PLUMBING WORK. THIS WORK SHALL INCLUDE SAW CUTTING CONCRETE AND PATCHING AS REQUIRED.

12. CONTRACTOR SHALL COORDINATE WORK WITH OTHER TRADES PRIOR TO INSTALLATION AND ARRANGE INSTALLATION OF WORK AS NECESSARY

13. ALL PLUMBING PIPING SHALL BE TEMPORARILY CAPPED DURING ROUGH-INS.

14. ALL PIPING PENETRATIONS THROUGH FIRE RATED FLOORS OR PARTITIONS/WALLS SHALL BE SEALED IN ACCORDANCE WITH PROPER UL LISTED SYSTEMS. ALL PENETRATIONS THROUGH NEW NON-RATED WALLS SHALL BE SEALED TO PREVENT SOUND TRANSFER.

15. COMPETENT AND SKILLED WORKMEN SHALL DO ALL WORK IN A FINISHED, AND CRAFTMANLIKE MANNER.

REVISIONS

THE WOOTEN COMPANY
120 North Boylan Avenue Raleigh, NC 27603-1423
919.828.0531 Fax 919.831.1589
License Number: F-1015

BRUNSWICK REGIONAL WATER AND SEWER H2GO
BRUNSWICK COUNTY NORTH CAROLINA
CONTRACT No. 4
REVERSE OSMOSIS WATER TREATMENT PLANT
PLUMBING COVER SHEET

NORTH CAROLINA PROFESSIONAL ENGINEER SEAL 039854 GREGORY D. BOWMAN

DESIGNED BY:	GDB
DRAWN BY:	GDB
CHECKED BY:	LHM
PROJECT NO.:	3081-AB
DATE:	JUNE 7, 2020
SCALE:	AS NOTED

SHEET 43 OF 181

P100

pdf2013.pltcfg
0.1.0000 " = in.
gbowman
6/9/2020 12:41:08 PM
T:\Projects\Brunswick_Regional_W&S_H2GO-3081\AB-Water_Supply&Treatment_Plant\Sheets\WTP Plumbing_Sheets.dgn

DocuSign Envelope ID: 8A19A8DD-C34A-4937-83AF-3FA662F4E29E

P110

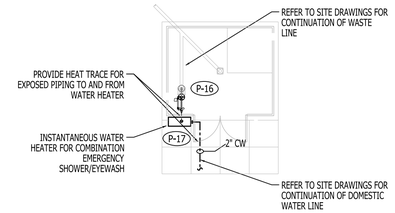

1 P110 FLOURIDE FEED BUILDING PLUMBING PLAN
SCALE: 1/8" = 1'

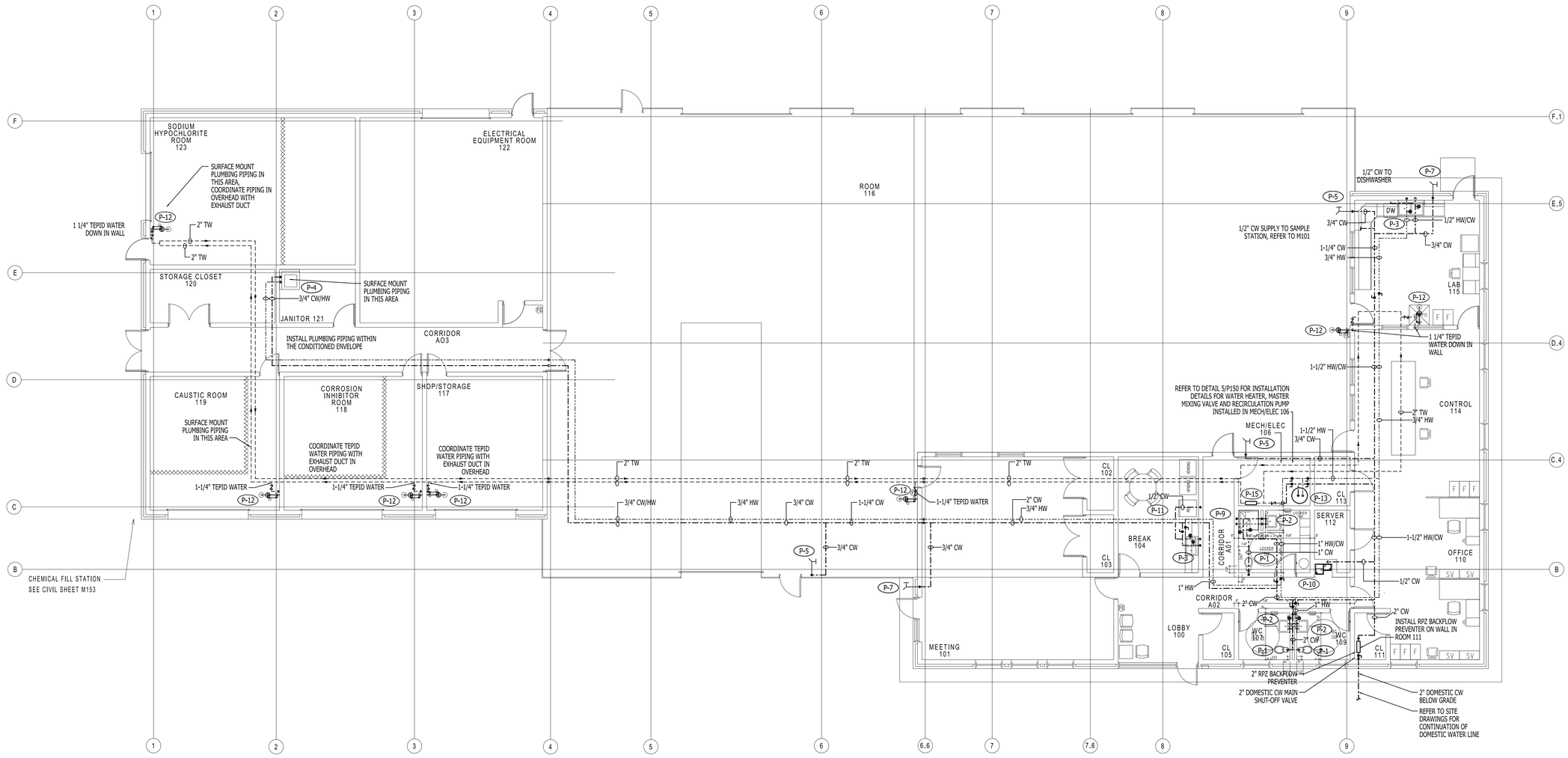

1 P110 PLUMBING WATER DISTRIBUTION PLAN
SCALE: 1/8" = 1'

REVISIONS

THE WOOTEN COMPANY
120 North Boylan Avenue Raleigh, NC 27603-1423
919.828.0531 Fax 919.831.1589
License Number: F-0115

BRUNSWICK REGIONAL WATER AND SEWER H2GO
BRUNSWICK COUNTY NORTH CAROLINA
CONTRACT No. 4
REVERSE OSMOSIS WATER TREATMENT PLANT
PLUMBING WATER DISTRIBUTION PLAN

NORTH CAROLINA PROFESSIONAL ENGINEER SEAL 039852 GREGORY D. BOWMAN

DESIGNED BY:	GDB
DRAWN BY:	GDB
CHECKED BY:	LHM
PROJECT NO.:	3081-AB
DATE:	JUNE 7, 2020
SCALE:	AS NOTED

SHEET 44 OF 181

P110

pdf2013.pltcfg
8:0.0000 "=" / in.
gbowman
1:14:42 PM
6/9/2020
T:\Projects\Brunswick_Regional_W&S_H2GO-3081\AB-Water_Supply&Treatment_Plant\Sheets\WTP\Plumbing_Sheets.dgn

DocuSign Envelope ID: ACC6BB65-592B-4B43-85C5-EED2086248C7

P120

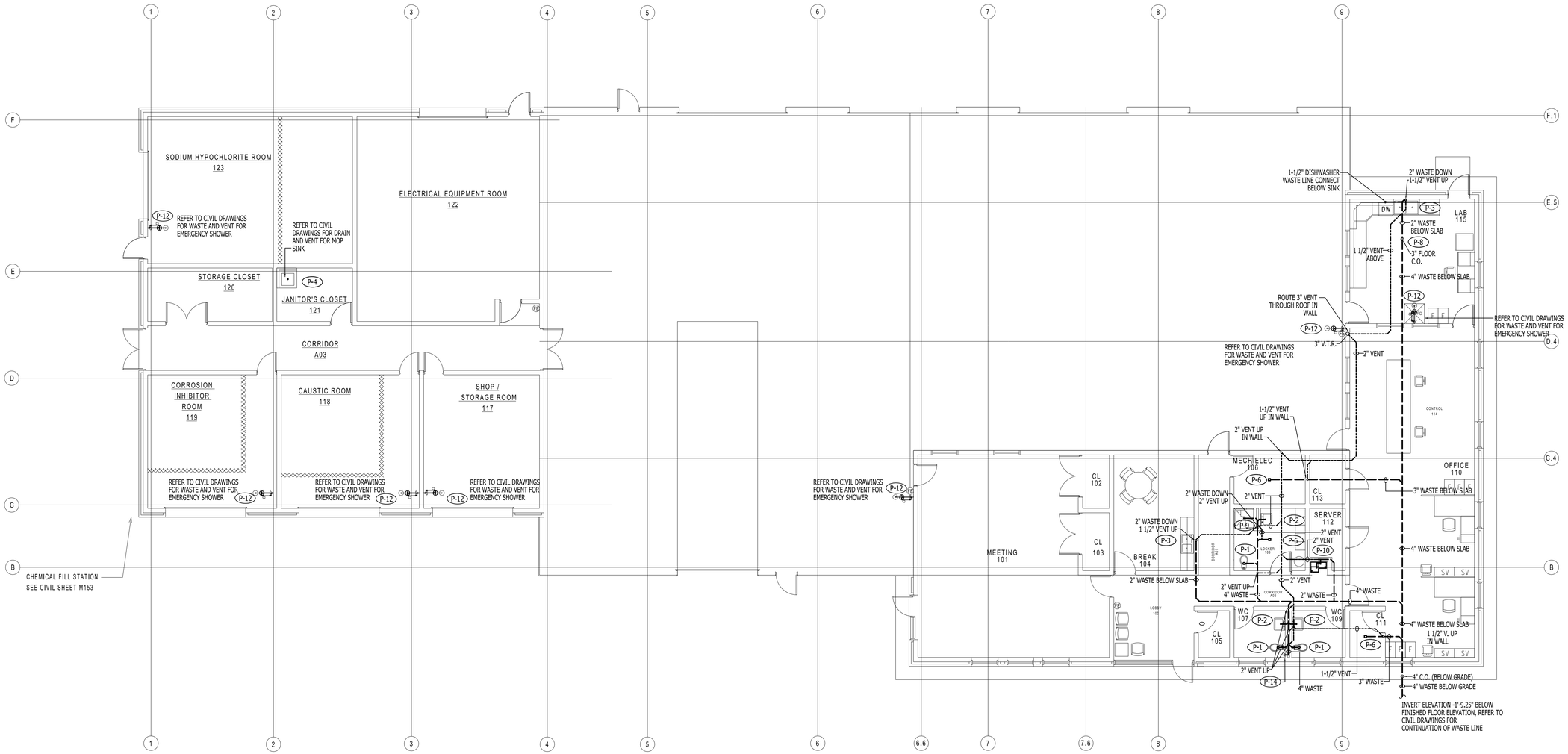

1 P120 PLUMBING WASTE AND VENT PLAN
NOT TO SCALE

REVISIONS

THE WOOTEN COMPANY
120 North Boylan Avenue Raleigh, NC 27603-1423
919.828.0531 Fax 919.834.3589
License Number: F-0115

BRUNSWICK REGIONAL WATER AND SEWER H2GO
BRUNSWICK COUNTY NORTH CAROLINA
CONTRACT No. 4
REVERSE OSMOSIS WATER TREATMENT PLANT
PLUMBING WASTE AND VENT PLAN

NORTH CAROLINA PROFESSIONAL ENGINEER SEAL 039852 LEWIS D. BOWMAN

DESIGNED BY:	GDB
DRAWN BY:	GDB
CHECKED BY:	LHM
PROJECT NO.:	3081-AB
DATE:	JUNE 7, 2020
SCALE:	AS NOTED

SHEET 45 OF 181

P120

pdf2013.pltcfg
8.0.0000 "-" in.
gbowman
6/9/2020 12:41:15 PM
T:\Projects\Brunswick_Regional_W&S_H2GO-3081\AB-Water_Supply&Treatment_Plant\Sheets\WTP\Plumbing_Sheets.dgn

DocuSign Envelope ID: ACC6BB65-592B-4B43-85C5-EED2086248C7

P150

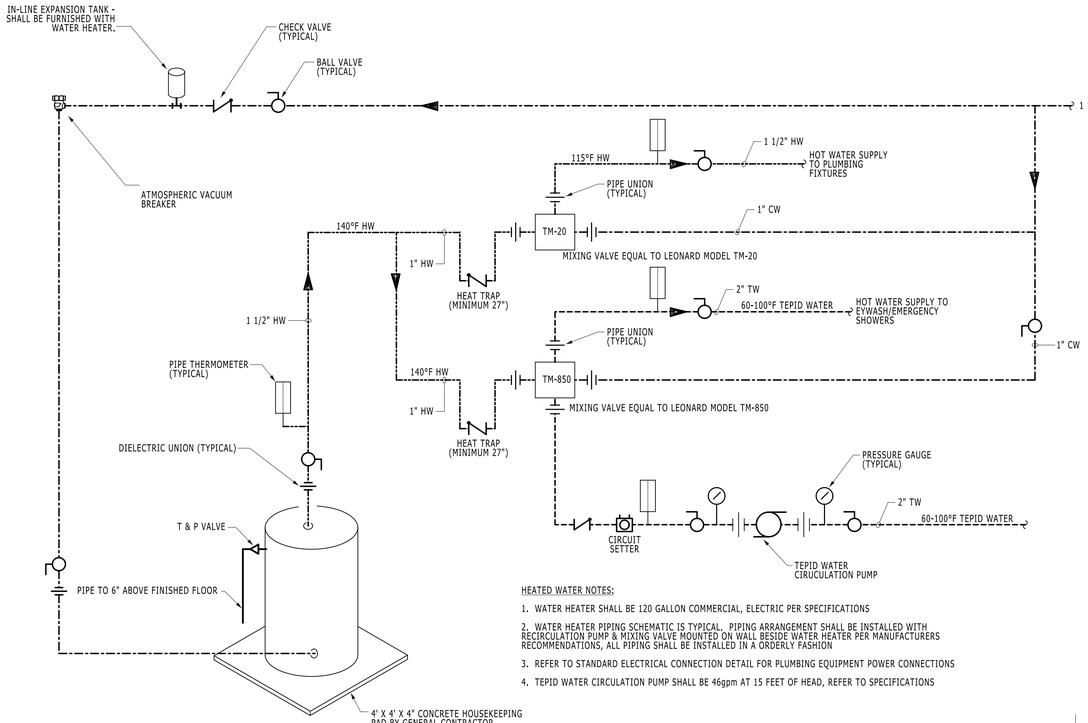

HEATED WATER NOTES:

1. WATER HEATER SHALL BE 120 GALLON COMMERCIAL, ELECTRIC PER SPECIFICATIONS
2. WATER HEATER PIPING SCHEMATIC IS TYPICAL. PIPING ARRANGEMENT SHALL BE INSTALLED WITH RECIRCULATION PUMP & MIXING VALVE MOUNTED ON WALL BESIDE WATER HEATER PER MANUFACTURERS RECOMMENDATIONS, ALL PIPING SHALL BE INSTALLED IN A ORDERLY FASHION
3. REFER TO STANDARD ELECTRICAL CONNECTION DETAIL FOR PLUMBING EQUIPMENT POWER CONNECTIONS
4. TEPID WATER CIRCULATION PUMP SHALL BE 46gpm AT 15 FEET OF HEAD, REFER TO SPECIFICATIONS

4 / P150 WATER HEATER AND RECIRCULATION LOOP INSTALLATION DETAIL
NOT TO SCALE

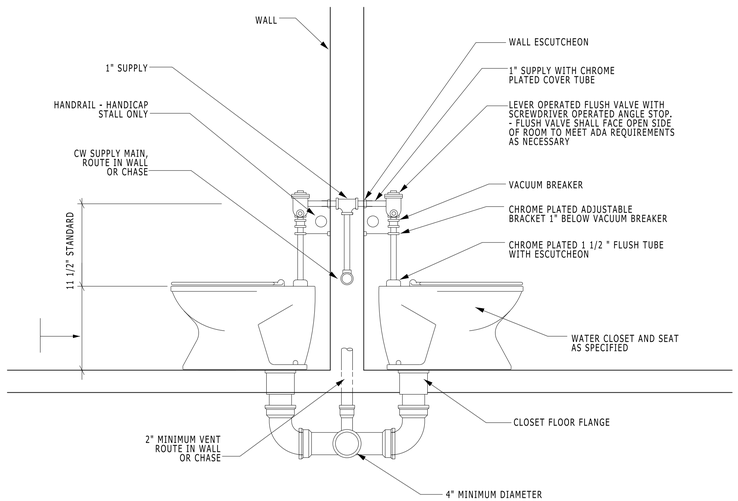

NOTE:
PLUMBING CONTRACTOR SHALL INSTALL SHOCK ARRESTORS ON FIXTURES PER PLANS

5 / P150 FLOOR MOUNTED WATER CLOSET INSTALLATION DETAIL
NOT TO SCALE

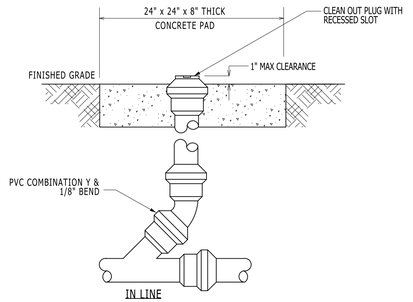

AS AN OPTION PRE-CAST CONCRETE CLEANOUT PADS SHALL BE ACCEPTED IN ALL EXTERIOR NON-VEHICULAR TRAFFIC AREAS

2 / P150 EXTERIOR CLEANOUT INSTALLATION DETAIL
NOT TO SCALE

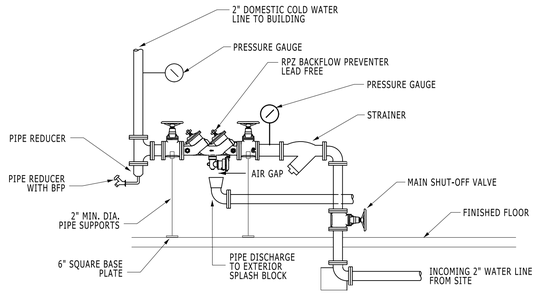

3 / P150 INTERIOR RPZ BACKFLOW PREVENTER INSTALLATION DETAIL
NOT TO SCALE

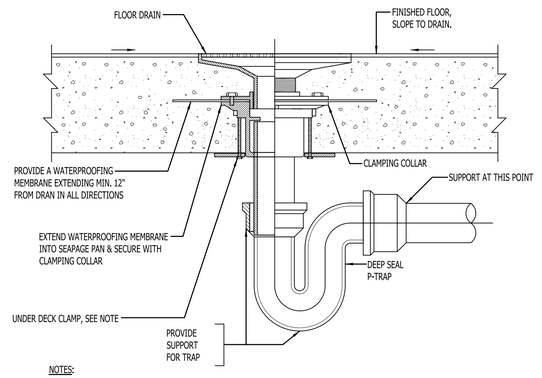

NOTES:

1. PROVIDE UNDER DECK CLAMP ON THIN SLAB INSTALLATIONS OF 5" OR LESS, ABOVE GRADE INSTALLATIONS ONLY. SECURE CLAMP TO DRAIN, REF. SPECIFICATIONS
2. PROVIDE COMMERCIAL GRADE TRAP SEAL WITH FLOOR DRAIN

1 / P150 FLOOR DRAIN INSTALLATION DETAIL
NOT TO SCALE

REVISIONS

THE WOOTEN COMPANY
120 North Boylan Avenue Raleigh, NC 27603-1423
919.828.0531 Fax 919.831.1589
License Number: F-0115

BRUNSWICK REGIONAL WATER AND SEWER H2GO
BRUNSWICK COUNTY NORTH CAROLINA
CONTRACT No. 4
REVERSE OSMOSIS WATER TREATMENT PLANT
PLUMBING DETAILS

NORTH CAROLINA PROFESSIONAL ENGINEER SEAL 039852 GLENN D. BOWMAN

DESIGNED BY:	GDB
DRAWN BY:	GDB
CHECKED BY:	LHM
PROJECT NO.:	3081-AB
DATE:	JUNE 7, 2020
SCALE:	AS NOTED

SHEET 46 OF 181

P150

pdf2013.pltcfg
0:1.0000 "/ in.
gbowman
6/9/2020 12:41:16 PM
T:\Projects\Brunswick_Regional_W&S_H2GO-3081\AB-Water_Supply&Treatment_Plant\Sheets\WTP\Plumbing_Sheets.dgn

DocuSign Envelope ID: ACC6BB65-592B-4B43-85C5-EED2086248C7

P160

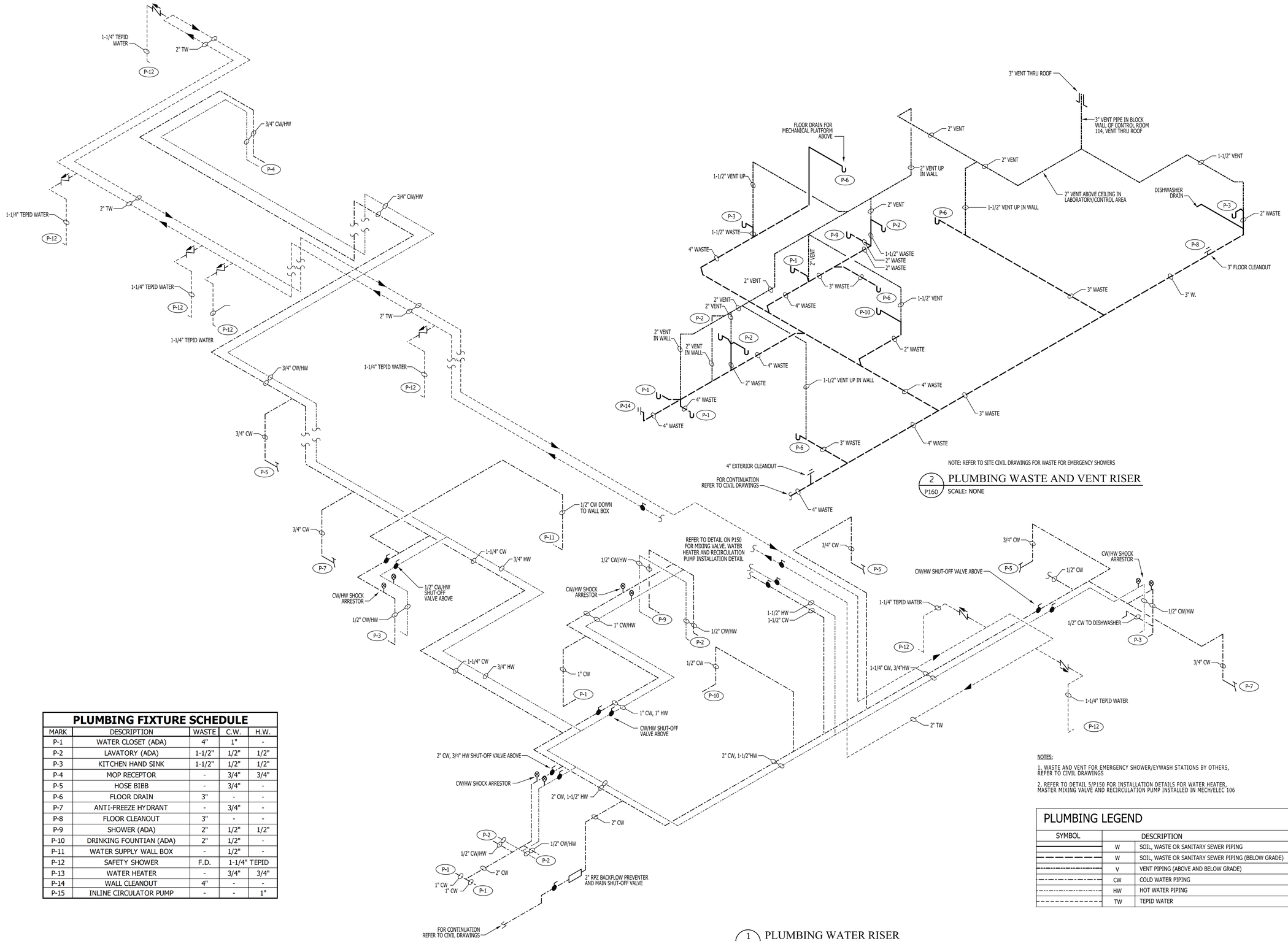

NOTE: REFER TO SITE CIVIL DRAWINGS FOR WASTE FOR EMERGENCY SHOWERS

2 P160 PLUMBING WASTE AND VENT RISER
SCALE: NONE

1 P160 PLUMBING WATER RISER
SCALE: NONE

PLUMBING FIXTURE SCHEDULE

MARK	DESCRIPTION	WASTE	C.W.	H.W.
P-1	WATER CLOSET (ADA)	4"	1"	-
P-2	LAVATORY (ADA)	1-1/2"	1/2"	1/2"
P-3	KITCHEN HAND SINK	1-1/2"	1/2"	1/2"
P-4	MOP RECEPTOR	-	3/4"	3/4"
P-5	HOSE BIBB	-	3/4"	-
P-6	FLOOR DRAIN	3"	-	-
P-7	ANTI-FREEZE HYDRANT	-	3/4"	-
P-8	FLOOR CLEANOUT	3"	-	-
P-9	SHOWER (ADA)	2"	1/2"	1/2"
P-10	DRINKING FOUNTIAN (ADA)	2"	1/2"	-
P-11	WATER SUPPLY WALL BOX	-	1/2"	-
P-12	SAFETY SHOWER	F.D.	1-1/4" TEPID	
P-13	WATER HEATER	-	3/4"	3/4"
P-14	WALL CLEANOUT	4"	-	-
P-15	INLINE CIRCULATOR PUMP	-	-	1"

NOTES:

1. WASTE AND VENT FOR EMERGENCY SHOWER/EYWASH STATIONS BY OTHERS, REFER TO CIVIL DRAWINGS

2. REFER TO DETAIL 5/P150 FOR INSTALLATION DETAILS FOR WATER HEATER, MASTER MIXING VALVE AND RECIRCULATION PUMP INSTALLED IN MECH/ELEC 106

PLUMBING LEGEND

SYMBOL		DESCRIPTION
	W	SOIL, WASTE OR SANITARY SEWER PIPING
	W	SOIL, WASTE OR SANITARY SEWER PIPING (BELOW GRADE)
	V	VENT PIPING (ABOVE AND BELOW GRADE)
	CW	COLD WATER PIPING
	HW	HOT WATER PIPING
	TW	TEPID WATER

REVISIONS

THE WOOTEN COMPANY
120 North Boylan Avenue Raleigh, NC 27603-1423
919.828.0531 Fax 919.834.5389
License Number: F-0113

BRUNSWICK REGIONAL WATER AND SEWER H2GO
BRUNSWICK COUNTY NORTH CAROLINA
CONTRACT No. 4
REVERSE OSMOSIS WATER TREATMENT PLANT
PLUMBING RISER DIAGRAMS

NORTH CAROLINA PROFESSIONAL ENGINEER SEAL 039852 GREGORY D. BOWMAN

DESIGNED BY: GDB
DRAWN BY: GDB
CHECKED BY: LHM
PROJECT NO.: 3081-AB
DATE: JUNE 7, 2020
SCALE: AS NOTED

SHEET 47 OF 181

P160

pdf2013.pltcfg
0:1.0000 "-" / in.
gbowman
12:41:16 PM
T:\Projects\Brunswick_Regional_W&S_H2GO-3081\AB-Water_Supply&Treatment_Plant\Sheets\WTP\Plumbing_Sheets.dgn

DocuSign Envelope ID: ACC6BB65-592B-4B43-85C5-EED2086248C7

H100

SPLIT SYSTEM DEHUMIDIFICATION UNIT SEQUENCE OF OPERATIONS

1. EACH ONE OF THREE SPLIT SYSTEM DEHUMIDIFICATION UNITS ARE STAND ALONE AND WILL OPERATE WITH THE MATCHING OUTDOOR UNIT ON A UNITARY CONTROLLER LOCATED IN CONTROL ROOM 114
2. THE SUPPLY FAN SHALL RUN CONTINUOUSLY TO MIX AIR IN THE SPACE
3. THE OUTDOOR UNIT WILL CYCLE ON AND OFF TO MEET THE TEMPERATURE AND HUMIDITY SETPOINTS
   - SUMMER AND WINTER TEMPERATURE SETPOINT 70°F (ADJUSTABLE)
   - SUMMER AND WINTER RELATIVE HUMIDITY SETPOINT 45% (ADJUSTABLE)
4. TEMPERATURE AND HUMIDITY WILL BE MONITORED IN THE RETURN DUCT WORK WITH COMBINATION TEMPERATURE AND HUMIDITY SENSORS
5. ALARMS WILL BE GENERATED AND REPORT TO THE CONTROL PANEL LOCATED IN THE CONTROL ROOM, ALARMS WILL BE GENERATED FOR THE FOLLOWING BUT NOT LIMITED TO:
   - A. TEMPERATURE AND/OR HUMIDITY OUT OF RANGE
   - B. FAN COMMANDED TO RUN AND DOES NOT RUN
   - C. COMPRESSOR IS COMMANDED TO RUN AND DOES NOT RUN
   - D. HIGH COMPRESSOR HEAD PRESSURE
   - E. UNIT COMMANDED TO DEFROST AND DEFROST CYCLE NOT ENERGIZED
   - F. GENERAL ALARM FOR OUTDOOR UNIT FAULT
6. HOT GAS REHEAT WILL BE ENERGIZED AS NEEDED TO CONTROL TEMPERATURE AND HUMIDITY
7. DEHUMIDIFICATION UNIT DHU-01 SHALL BE INTERLOCKED WITH GARAGE DOOR SWITCHES, THE SWITCHES WILL INDICATE WHEN ANY GARAGE DOOR IS OPEN AND DE-ENERGIZE DHU-01

VRV SYSTEM

1. THE VARIABLE REFRIGERANT SYSTEM (VRV) CONSISTS OF (5) INDOOR UNITS (FCU), A SINGLE OUTDOOR (OU) UNIT, (1) BRANCH SELECTOR (BS) SOLENOID VALVE BOX LOCATED IN MECHANICAL ROOM 106, TOUCH SCREEN UNITARY CONTROLLER FOR THE SYSTEM, 7-DAY PROGRAMMABLE CONTROLLERS FOR EACH FAN COIL, CONNECTING REFRIGERANT PIPING AND INTERCONNECTING CONTROL WIRING
2. ALL FCU WILL BE EQUIPPED WITH 7-DAY PROGRAMMABLE THERMOSTATS LOCATED IN EACH ZONE. THE FCU WILL COMMUNICATE WITH THE OUTDOOR UNIT AND THE BRANCH SELECTOR BOX
3. THE INDOOR UNIT SUPPLY FAN SHALL RUN CONTINUOUSLY DURING OCCUPIED HOURS TO DELIVER VENTILATION AIR TO OCCUPIED AREAS
5. EF-05 TOILET EXHAUST FAN SHALL BE HARDWIRED INTERLOCKED WITH FCU-02, EF-05 SHALL BE ENERGIZED WHEN FCU-02 IS ENERGIZED, AND EF-05 SHALL BE DE-ENERGIZED WHEN FCU-02 SUPPLY FAN IS OFF FOR ANY REASON
4. THE OUTDOOR UNIT WILL BE ENERGIZED WHEN ANY COMBINATION OF INDOOR UNITS CALL FOR HEATING OR COOLING
6. THE BRANCH SELECTOR SHALL DETERMINE IF HEATING OR COOLING IS REQUIRED AT EACH FCU AND CONTROL REFRIGERANT FLOW ACCORDINGLY
7. THE VRV SYSTEM WILL BE EQUIPPED WITH A TOUCH SCREEN SYSTEM LEVEL CONTROLLER LOCATED IN THE LOBBY, THE SYSTEM CONTROLLER WILL BE CAPABLE OF OVERRIDING OF THE FCU, CHANGING SETPOINTS AND DISPLAYING ALARMS
8. THE SYSTEM WILL GENERATE THE FOLLOWING ALARMS THAT WILL BE REPORTED TO THE SYSTEM LEVEL CONTROLLER IN THE LOBBY:
   - A. TEMPERATURE IS OUT OF RANGE
   - B. FCU COMMANDED TO RUN AND DOES NOT RUN
   - C. OUTDOOR UNIT IS COMMANDED TO RUN AND DOES NOT RUN
   - D. HIGH COMPRESSOR HEAD PRESSURE
   - E. GENERAL ALARM FOR OUTDOOR UNIT FAULT
9. THE FCU SHALL INTAKE OUTDOOR AIR THROUGH OUTSIDE AIR DUCTWORK CONNECTED TO THE RETURN SIDE OF THE UNIT
10. THE SYSTEM SHALL BE PROGRAMMED WITH THE FOLLOWING INDOOR TEMPERATURE SETPOINTS
    - SUMMER OCCUPIED 74°F (ADJUSTABLE)
    - WINTER OCCUPIED 68°F (ADJUSTABLE)
    - SUMMER UNOCCUPIED 80°F (ADJUSTABLE)
    - WINTER UNOCCUPIED 62°F (ADJUSTABLE)
11. THE SYSTEM SHALL BE ENERGIZED DURING UNOCCUPIED HOURS IF THE SPACE TEMPERATURE DRIFTS ABOVE OR BELOW THE UNOCCUPIED SETPOINT

ELECTRICAL ROOM AIR CONDITIONING UNIT

1. THE COMPUTER ROOM AIR CONDITIONER (CRAC) SHALL OPERATE IN A STAND ALONE MANOR TO MAINTAIN ROOM TEMPERATURE IN THE ELECTRICAL ROOM 122
2. THE INDOOR AN OUTDOOR UNITS SHALL OPERATE AND COMMUNICATE TOGETHER AS A SYSTEM
3. THE SYSTEM SHALL MAINTAIN THE ROOM TEMPERATURE SETPOINT OF 75°F (ADJUSTABLE)

ELECTRIC RADIANT HEATERS

1. THE RADIANT HEATERS SHALL OPERATE AS A SINGLE SYSTEM IN EACH ROOM
2. A SPACE TEMPERATURE SENSOR SHALL ENERGIZE THE ALL RADIANT HEATERS IN A SPACE SIMULTANEOUSLY
3 THE SPACE TEMPERATURE POINT TO ENERGIZE THE RADIANT HEATERS SHALL BE 40°F (ADJUSTABLE)
4. THE RADIANT HEATERS SHALL BE DE-ENERGIZED WHEN THE SPACE TEMPERATURE IS ABOVE 40°F (ADJUSTABLE)

STORAGE ROOM EXHAUST FANS

1. EACH EXHAUST FAN SHALL OPERATE INDEPENDENTLY BASED ON SPACE TEMPERATURE
2. THE EXHAUST FAN SHALL BE NORMALLY OFF
3. THE EXHAUST FAN SHALL BE ENERGIZED WHEN SPACE TEMPERATURE REACHES 75°F (ADJUSTABLE) AND REMAIN ON UNTIL SPACE TEMPERATURE DROPS BELOW 75°F

EXHAUST FAN EF-06

1. EF-06 SHALL RUN CONTINUOUSLY

LEGEND

SYMBOL	DESCRIPTION
D	CONDENSATE DRAIN PIPING
	INDICATES DIRECTION OF FLOW
	INDICATES DIRECTION OF SLOPE
	PIPE ANCHOR
	BALL VALVE
	CHECK VALVE
	BALANCING VALVE
	ELBOW DOWN
	ELBOW UP
	STRAINER
	UNION
T	THERMOSTAT OR TEMPERATURE SENSOR
	MANUAL VOLUME DAMPER (V.D.)
	MOTOR OPERATED DAMPER (MOD)
	CEILING SUPPLY DIFFUSER
	CEILING RETURN GRILLE
	CEILING EXHAUST GRILLE
C.O.	CLEAN OUT
H	HUMIDISTAT OR HUMIDITY SENSOR
	FIRE DAMPER AT WALL
	SMOKE DAMPER AT WALL
A.D.	ACCESS DOOR
DN	DOWN
	FLEXIBLE DUCT
F.D.	FLOOR DRAIN
	INDICATES CONNECT TO WORK PROVIDED BY OTHER TRADE
	INDICATES END POINT OF DEMOLITION
	BUTTERFLY VALVE (G INDICATES GEAR OPERATED)
12 x 6	RECTANGLE DUCT SIZE (W x H)
44/24	FLAT OVAL DUCT SIZE (MAJOR AXIS / MINOR AXIS)
	COMB. MAGNETIC MOTOR STARTER & DISCONNECT
S	DUCT MOUNTED SMOKE DETECTOR
C	UNIT CONTROLLER

ABBREVIATIONS

AFC	ABOVE FINISHED CEILING
AFF	ABOVE FINISHED FLOOR
BAS	BUILDING AUTOMATION SYSTEM
BTUH	BRITISH THERMAL UNIT PER HOUR
CFM	CUBIC FEET PER MINUTE
CHW	CHILLED WATER PIPING
DB	DRY BULB
EA	EXHAUST AIR FLOW
EAT	ENTERING AIR TEMPERATURE
ESP	EXTERNAL STATIC PRESSURE
W.G.	INCHES OF WATER GAUGE
EWT	ENTERING WATER TEMPERATURE
F	FAHRENHEIT
FOT	FLAT ON TOP
HP	HORSEPOWER
HZ	HERTZ
IN. WC	INCHES OF WATER COLUMN
KW	TOTAL POWER INPUT, KILOWATTS
LAT	LEAVING AIR TEMPERATURE
LBS	POUNDS
LRA	LOCKED ROTOR AMPS
LWT	LEAVING WATER TEMPERATURE
MC	MECHANICAL CONTRACTOR
MFG	MANUFACTURER
MCA	MINIMUM CIRCUIT AMPS
MOCP	MAXIMUM OVER CURRENT PROTECTION
MVD	MANUAL VOLUME DAMPER
OA	OUTSIDE AIR FLOW
PH	PHASE
PSI	POUNDS PER SQUARE INCH
RA	RETURN AIR FLOW
RLA	RATED LOAD AMPS
RPM	REVOLUTIONS PER MINUTE
SA	SUPPLY AIR FLOW
SP	STATIC PRESSURE
TA	TRANSFER AIR FLOW
TEMP	TEMPERATURE
TON	12,000 BTUH OF COOLING CAPACITY
TYP	TYPICAL
TRX	TRANSFER
VAV	VARIABLE AIR VOLUME
VFD	VARIABLE FREQUENCY DRIVE
WB	WET BULB TEMPERATURE

GENERAL REQUIREMENTS

1. THE HEATING AND AIR CONDITIONING CONTRACTOR (THE CONTRACTOR) SHALL PROVIDE ALL SPECIFIED AND MISCELLANEOUS MATERIAL AND LABOR AS REQUIRED FOR A COMPLETE AND OPERATING SYSTEM AS DESCRIBED BY THESE PLANS AND SPECIFICATIONS.

2. ALL EQUIPMENT AND MATERIALS SHALL BE INSTALLED IN ACCORDANCE WITH ALL LOCAL, STATE, AND NATIONAL CODES AND RECOMMENDATIONS OF THE MANUFACTURERS. IF THERE IS A CONFLICT IN THE ABOVE REQUIREMENTS, THE MORE STRINGENT SHALL BE USED.

3. THE CONTRACTOR SHALL OBTAIN ALL PERMITS AND INSPECTIONS NECESSARY TO COMPLETE HIS WORK UNDER THIS CONTRACT.

4. THE CONTRACTOR SHALL VISIT THE SITE TO FAMILIARIZE HIMSELF WITH CONDITIONS AND RESOLVE ANY CONFLICTS WITH THESE PLANS WITH THE ENGINEER.

5. ALL DUCTWORK AND EQUIPMENT SHOWN ON THESE DRAWINGS IS STRICTLY DIAGRAMMATIC. ALL DUCTWORK SIZES SHOWN ARE FREE AREA SIZES. IT SHALL BE THE RESPONSIBILITY OF THE CONTRACTOR TO ENSURE THAT ITEMS FURNISHED UNDER THIS CONTRACT WILL FIT IN THE SPACE AVAILABLE. THE CONTRACTOR SHALL MAKE NECESSARY FIELD MEASUREMENTS TO ASCERTAIN SPACE REQUIREMENTS, INCLUDING THOSE FOR CONNECTIONS, AND SHALL PROVIDE SUCH SIZES AND SHAPES OF EQUIPMENT THAT ARE THE TRUE INTENT AND MEANING OF THESE DRAWINGS AND SPECIFICATIONS. ANY CONFLICTS SHALL BE RESOLVED WITH THE ENGINEER.

6. PRIOR TO CONSTRUCTION, THE CONTRACTOR SHALL COORDINATE HIS WORK WITH ALL OTHER TRADES. ALL DRAWINGS INDICATE THE GENERAL ARRANGEMENT DESIRED. THE EXACT LOCATIONS AND DETAILS OF CONSTRUCTION MAY BE SUCH THAT VARIANCES ARE REQUIRED. THE DRAWINGS DO NOT SHOW ALL BENDS, OFFSETS, AND FITTINGS THAT MAY BE REQUIRED FOR THE COMPLETE EXECUTION OF THIS CONTRACT. SUCH VARIANCES AND CONTINGENCIES SHALL BE ALLOWED FOR IN THE CONTRACTOR'S BID AND SHALL BE ACCOMPLISHED WITHOUT ADDITIONAL COST TO THE OWNER. PRIOR TO ORDERING EQUIPMENT, THE CONTRACTOR SHALL PREPARE COORDINATION DRAWINGS SHOWING HOW HIS EQUIPMENT IS TO BE LOCATED IN THE SPACE INDICATED. THIS DRAWING SHALL SHOW THE NEW AND EXISTING WORK OF ALL OTHER TRADES. THE CONTRACTOR SHALL CONTACT THE OTHER CONTRACTORS INVOLVED FOR DIMENSIONS, LOCATIONS, AND REQUIRED CLEARANCES OF THE EQUIPMENT THEY INTEND TO PROVIDE FOR THIS JOB. THE AFOREMENTIONED COORDINATION DRAWINGS SHALL BE SUBMITTED TO THE ENGINEER FOR APPROVAL.

7. DO NOT SCALE THESE DRAWINGS. REFER TO THE ARCHITECTURAL PLANS FOR DIMENSIONS.

8. ALL EQUIPMENT SHALL BE LOCATED AND INSTALLED TO PROVIDE MAXIMUM SPACE FOR MAINTENANCE AND SERVICE.

9. ALL MATERIALS USED SHALL BE NEW AND FREE OF DEFECTS. WHERE TRADE NAMES ARE MENTIONED, THEY ARE GIVEN AS A REFERENCE TO THE QUALITY OF THE APPARATUS REQUIRED. ALL MATERIALS AND EQUIPMENT SHALL BEAR THE UL LABEL OR EQUIVALENT WHERE APPLICABLE. OTHER MAKES MAY BE USED IF APPROVED IN WRITING BY THE ENGINEER. A COMPLETE LIST OF MATERIALS AND EQUIPMENT PROPOSED FOR USE IN THIS CONTRACT TO THE ENGINEER WITHIN TEN DAYS FOLLOWING THE AWARD OF CONTRACT. IF SUCH LIST IS NOT SUBMITTED, THE CONTRACTOR SHALL SUPPLY THE MATERIALS AND EQUIPMENT SPECIFIED OR AS DIRECTED BY THE ENGINEER. THE CONTRACTOR SHALL PROVIDE FOUR COPIES OF SUBMITTALS TO THE ENGINEER FOR REVIEW AND APPROVAL PRIOR TO ORDERING EQUIPMENT.

10. WORKMANSHIP SHALL BE FIRST-CLASS AND PERFORMED BY EXPERIENCED AND SKILLED CRAFTSMEN.

11. COORDINATE EXACT LOCATION OF ALL DIFFUSERS WITH LIGHTS, SPRINKLER HEADS, AND OTHER CEILING MOUNTED DEVICES. SEE THE REFLECTED CEILING PLAN.

12. UPON COMPLETION OF THE WORK, A TEST AND BALANCE SHALL BE PERFORMED IN ACCORDANCE WITH "AABC" REQUIREMENTS. FURNISH FINAL COPY OF ALL TESTING, ADJUSTING, AND BALANCING REPORTS AS A PART OF THE OPERATING AND MAINTENANCE MANUALS. INDICATE DEFICIENCIES PREVENTING PROPER TESTING. ADJUSTING AND BALANCING OF SYSTEMS AND EQUIPMENT TO ACHIEVE SPECIFIED PERFORMANCE. ADJUST AIR HANDLING SYSTEMS TO WITHIN PLUS OR MINUS 10 PERCENT OF DESIGN. ADJUST TOTAL AIR TO ALL AIR OUTLETS AND INLETS TO WITHIN PLUS 10 PERCENT AND MINUS 5 PERCENT OF DESIGN TO SPACE. ADJUST INDIVIDUAL OUTLETS AND INLETS IN SPACE TO WITHIN PLUS OR MINUS 10 PERCENT OF DESIGN. ADJUST AIR HANDLING AND DISTRIBUTION SYSTEMS TO OBTAIN REQUIRED OR DESIGN SUPPLY, RETURN AND EXHAUST AIR QUANTITIES. MEASURE AIR QUANTITIES AT AIR INLETS AND OUTLETS. VARY TOTAL SYSTEM AIR QUANTITIES BY ADJUSTMENT OF FAN SPEEDS. PROVIDE SHEAVE DRIVE CHANGES TO VARY FAN SPEED IF REQUIRED. VARY BRANCH AIR QUANTITIES BY DAMPER REGULATION. MEASURE STATIC AIR PRESSURE CONDITIONS ON AIR SUPPLY UNITS, INCLUDING FILTER AND COIL PRESSURE DROPS AND TOTAL PRESSURE ACROSS FAN. MAKE ALLOWANCES FOR 50 PERCENT LOADING OF FILTERS. ADJUST OUTSIDE AIR AUTOMATIC DAMPERS, OUTSIDE AIR, RETURN AIR, AND EXHAUST DAMPERS FOR DESIGN CONDITIONS. AT MODULATING DAMPER LOCATIONS, TAKE MEASUREMENTS AND BALANCE AT EXTREME CONDITIONS.

13. AS APPLICABLE, THE CONTRACTOR SHALL VERIFY THE OPERATION OF ALL EXISTING MECHANICAL EQUIPMENT IN THE AREA OF WORK. ALL MEASUREMENTS SHALL BE RECORDED NECESSARY TO ASCERTAIN THE PROPER OPERATION OF THE EQUIPMENT INCLUDING, BUT NOT LIMITED TO, AMPERAGE, GPM FLOW, INLET AND OUTLET TEMPERATURES, AIR FLOW, AND INLET AND OUTLET STATIC PRESSURES. ANY DEFICIENCY IN THE RATED OUTPUT OF THE EQUIPMENT SHALL BE REPORTED TO THE ENGINEER. IN ANY CASE, SAID REPORT SHALL BE SUBMITTED TO THE ENGINEER UPON REQUEST.

14. ALL EQUIPMENT SHALL BE PROVIDED WITH PERMANENT LABELS FOR IDENTIFICATION. ALL PIPE SHALL BE LABELED TO INDICATE PIPE FUNCTION AND DIRECTION OF FLOW. PROVIDE VALVE TAGS FOR ALL VALVES. COORDINATE NOMENCLATURE AND NUMBERING WITH OWNER PRIOR TO INSTALLATION.

15. THE CONTRACTOR SHALL FURNISH A BOUND SET OF OPERATING AND MAINTENANCE INSTRUCTIONS FOR ALL EQUIPMENT TO THE OWNER UPON COMPLETION OF PROJECT.

16. THE CONTRACTOR SHALL, AT THE COMPLETION OF THE WORK, CLEAN, POLISH, AND/OR WASH ALL EXPOSED ITEMS OF MATERIALS, EQUIPMENT, AND FIXTURES IN HIS CONTRACT TO LEAVE SUCH ITEMS BRIGHT AND CLEAN. THE CONTRACTOR SHALL KEEP THE PREMISES CLEAR OF DEBRIS FROM HIS WORK DURING CONSTRUCTION AND LEAVE THE AREA AND BUILDING CLEAN AT COMPLETION OF THE CONTRACT.

17. MECHANICAL AND ELECTRICAL EQUIPMENT SHALL OPERATE WITHOUT OBJECTIONABLE NOISE OR VIBRATION, AS DETERMINED BY THE ENGINEER. IF SUCH OBJECTIONABLE NOISE OR VIBRATION SHOULD BE PRODUCED AND TRANSMITTED TO OCCUPIED PORTIONS OF THE BUILDING, THE CONTRACTOR SHALL MAKE THE NECESSARY CHANGES TO CORRECT THE NOISE OR VIBRATION WITHOUT ADDITIONAL COST TO THE OWNER.

18. THE CONTRACTOR SHALL PROVIDE A COMPLETE 1-YEAR WARRANTY ON ALL LABOR AND MATERIALS UNDER THIS CONTRACT. REFRIGERATION COMPRESSORS PROVIDED UNDER THIS CONTRACT SHALL CARRY THE MANUFACTURER'S PUBLISHED 5-YEAR NON-PRORATED WARRANTY.

19. THE ELECTRICAL CONTRACTOR SHALL BE RESPONSIBLE FOR ALL POWER CONNECTIONS TO THE EQUIPMENT PROVIDED UNDER HIS CONTRACT.

20. THE MECHANICAL CONTRACTOR SHALL BE RESPONSIBLE FOR ALL CONTROL WIRING FOR HIS EQUIPMENT.

21. OUTSIDE AIR INTAKES SHALL BE LOCATED A MINIMUM OF 10 FEET FROM ALL EXHAUST DISCHARGE AND PLUMBING VENTS.

22. REPLACE ALL FILTERS JUST PRIOR TO ACCEPTANCE BY THE OWNER.

23. CONTRACTORS AND SUB-CONTRACTORS SHALL CAREFULLY REVIEW THE CONSTRUCTION DOCUMENTS. INFORMATION REGARDING THE COMPLETE WORK IS DISPERSED THROUGHOUT THE DOCUMENT SET AND CANNOT BE ACCURATELY DETERMINED WITHOUT REFERENCE TO THE COMPLETE DOCUMENT SETS.

24. ROUTE REFRIGERANT LINES FROM OUTDOOR CONDENSING UNITS IN THE MOST DIRECT PATH TO AIR HANDLER LOCATED ABOVE CEILING. INSULATE WITH FOAM INSULATION. PROVIDE LONG LINE REFRIGERATION KIT AS REQUIRED.

25. PROVIDE AN AUXILIARY DRAIN PAN FOR ANY AIR CONDITIONING EQUIPMENT LOCATED ABOVE A CEILING OR WHERE CONDENSATE OVERFLOW WOULD DAMAGE BUILDING COMPONENTS. THE AUXILIARY DRAIN PAN SHOULD BE PROVIDED WITH A FLOAT SWITCH THAT STOPS THE FAN UPON ACCUMULATION OF CONDENSATE IN THE PAN. LOCATE ALL EQUIPMENT ABOVE THE CEILING SO THAT ADEQUATE SLOPE IS PROVIDED FOR ALL DRAIN LINES. IF A CONDENSATE PUMP IS SPECIFIED, EXTEND THE AUXILIARY DRAIN PAN UNDER THE CONDENSATE PUMP. CONDENSATE DRAIN LINES IN RETURN AIR PLENUMS SHALL BE MADE OF TYPE 'K' COPPER PIPE. INSULATE DRAIN LINES TO PREVENT SWEATING. ROUTE CONDENSATE DRAINS AS DIRECTED ON PLANS.

MECHANICAL SUMMARY

MECHANICAL SYSTEMS, SERVICE SYSTEMS AND EQUIPMENT

Thermal Zone 3A
- winter dry bulb: 26°F
- summer dry bulb: 92.3°F

Interior design conditions
- winter dry bulb: 70°F
- summer dry bulb: 75°F
- relative humidity: 50%

Building heating load: 47.9 MBH
Building cooling load: 88.8 MBH
Mechanical Spacing Conditioning System
- Unitary
  - description of unit:
  - heating efficiency:
  - cooling efficiency: SEE MECHANICAL EQUIPMENT SCHEDULES
  - size category of unit:
- Boiler N/A
  - Size category. If oversized, state reason.
- Chiller N/A
  - Size category. If oversized, state reason.

List equipment efficiencies: SEE MECHANICAL EQUIPMENT SCHEDULES

REVISIONS

THE WOOTEN COMPANY
120 North Boylan Avenue Raleigh, NC 27603-1423
919.828.0531 Fax 919.831.1589
License Number: F-1015

BRUNSWICK REGIONAL WATER AND SEWER H2GO
BRUNSWICK COUNTY NORTH CAROLINA
CONTRACT No. 4
REVERSE OSMOSIS WATER TREATMENT PLANT
HVAC COVER SHEET

NORTH CAROLINA PROFESSIONAL ENGINEER SEAL 039852 ENGINEER GLENN D. BOWMAN

DESIGNED BY: GDB
DRAWN BY: GDB
CHECKED BY: LHM
PROJECT NO.: 3081-AB
DATE: JUNE 7, 2020
SCALE: AS NOTED

SHEET 48 OF 181

H100

X
C-x.xx NOT TO SCALE

pdf2013.pltcfg
0.1.0000 " = in.
gbowman
6/9/2020 12:52:08 PM
T:\Projects\Brunswick_Regional_W&S_H2GO-3081\AB-Water_Supply&Treatment_Plant\Sheets\WTP\HVAC_Sheets.dgn

DocuSign Envelope ID: ACC6BB65-592B-4B43-85C5-EED2086248C7

H110

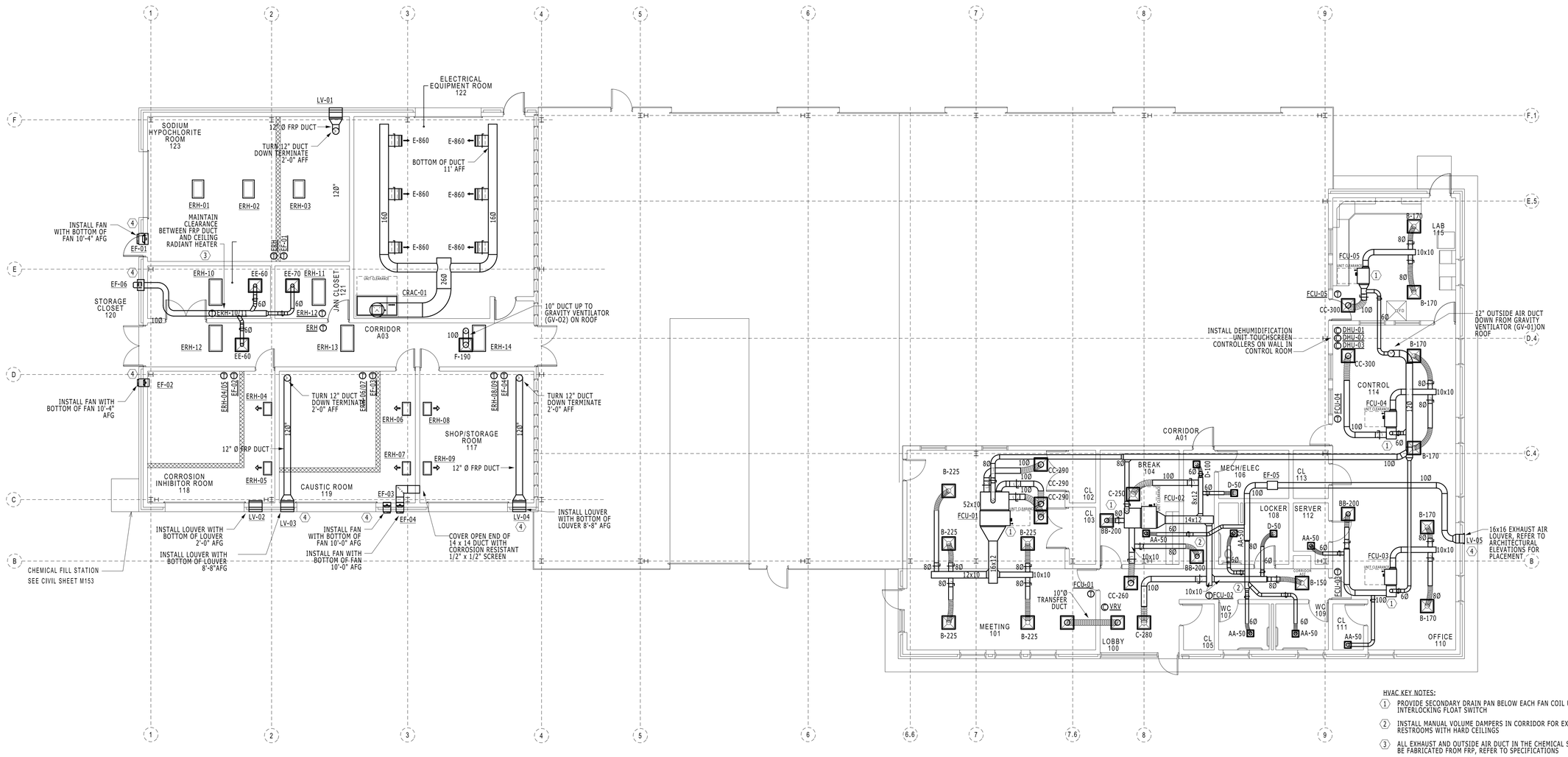

HVAC KEY NOTES:

1. PROVIDE SECONDARY DRAIN PAN BELOW EACH FAN COIL UNIT WITH INTERLOCKING FLOAT SWITCH
2. INSTALL MANUAL VOLUME DAMPERS IN CORRIDOR FOR EXHAUST IN RESTROOMS WITH HARD CEILINGS
3. ALL EXHAUST AND OUTSIDE AIR DUCT IN THE CHEMICAL STORAGE AREA TO BE FABRICATED FROM FRP, REFER TO SPECIFICATIONS
4. REFER TO ARCHITECTURAL ELEVATIONS FOR LOUVER AND FAN ELEVATIONS

1 / H110 HVAC DUCTWORK PLAN-GROUND LEVEL

SCALE: 1/8" = 1'

REVISIONS

BRUNSWICK REGIONAL WATER AND SEWER H2GO
BRUNSWICK COUNTY NORTH CAROLINA
CONTRACT No. 4
REVERSE OSMOSIS WATER TREATMENT PLANT
HVAC DUCTWORK PLAN

NORTH CAROLINA PROFESSIONAL ENGINEER SEAL 039852 GLENN D. BOWMAN

DESIGNED BY:	GDB
DRAWN BY:	GDB
CHECKED BY:	LHM
PROJECT NO.:	3081-AB
DATE:	JUNE 7, 2020
SCALE:	AS NOTED

SHEET 49 OF 181

H110

pdf2013.pltcfg
0:1.0000 ".." / in.
gbowman
6/9/2020 12:52:15 PM
T:\Projects\Brunswick_Regional_W&S_H2GO-3081\AB-Water_Supply&Treatment_Plant\Sheets\WTP\HVAC_Sheets.dgn

DocuSign Envelope ID: ACC6BB65-592B-4B43-85C5-EED2086248C7

H111

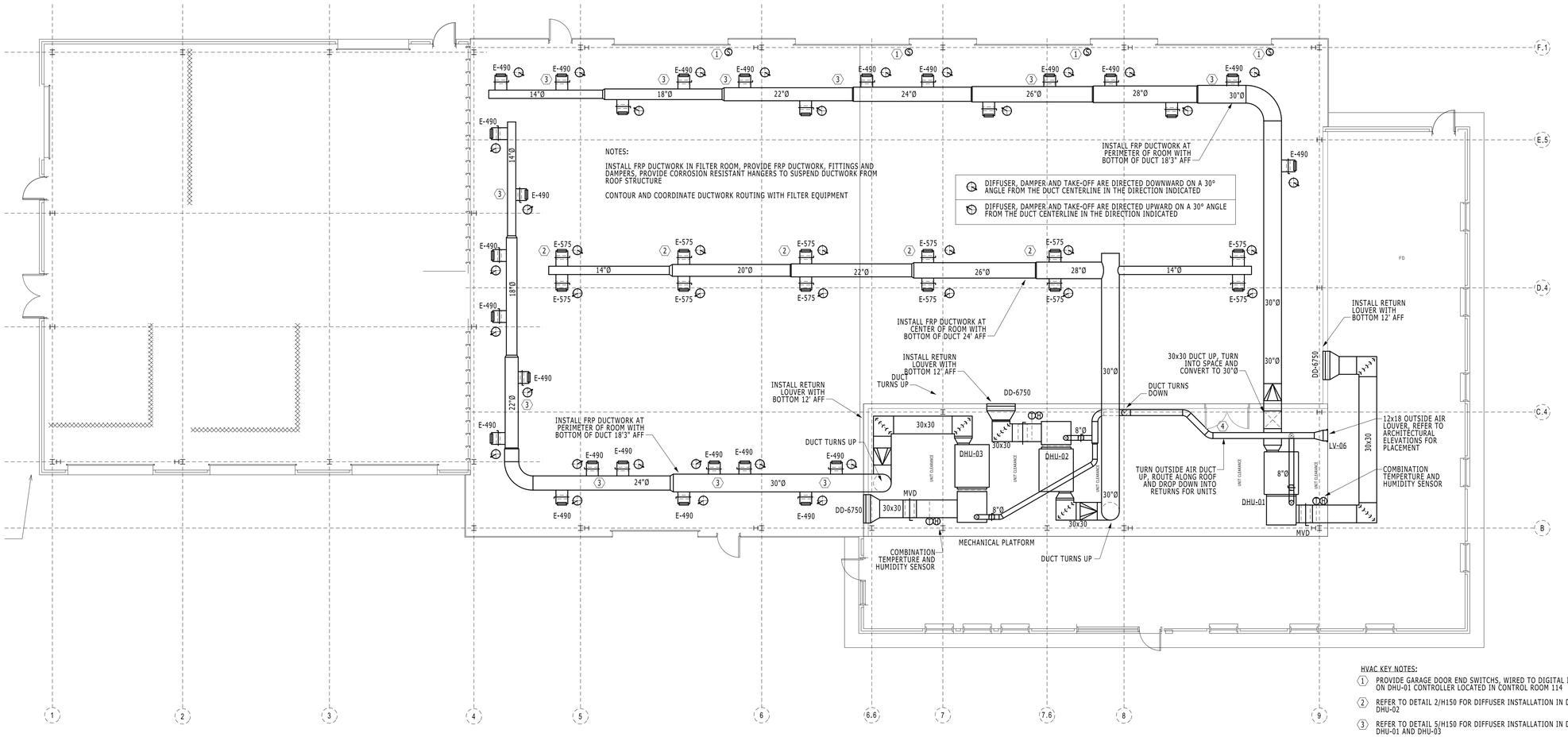

1 H111 HVAC MECHANICAL PLATFORM PLAN
SCALE: 1/8" = 1'

HVAC KEY NOTES:

1. PROVIDE GARAGE DOOR END SWITCHS, WIRED TO DIGITAL INPUT POINT ON DHU-01 CONTROLLER LOCATED IN CONTROL ROOM 114
2. REFER TO DETAIL 2/H150 FOR DIFFUSER INSTALLATION IN DUCTWORK FOR DHU-02
3. REFER TO DETAIL 5/H150 FOR DIFFUSER INSTALLATION IN DUCTOWRK FOR DHU-01 AND DHU-03
4. ROUTE OUTSIDE AIR DUCT TIGHT TO STRUCTURE TO MAINTAIN CLEARANCE IN FRONT OF DOOR OPENING

REVISIONS

BRUNSWICK REGIONAL WATER AND SEWER H2GO
BRUNSWICK COUNTY NORTH CAROLINA
CONTRACT No. 4
REVERSE OSMOSIS WATER TREATMENT PLANT

HVAC MECHANICAL PLATFORM PLAN

NORTH CAROLINA PROFESSIONAL ENGINEER SEAL 039852 GLENN D. BOWMAN

DESIGNED BY: GDB
DRAWN BY: GDB
CHECKED BY: LHM
PROJECT NO.: 3081-AB
DATE: JUNE 7, 2020
SCALE: AS NOTED

SHEET 50 OF 181

H111

pdf2013.pltcfg
0:1.0000 "-" / in.
gbowman
6/9/2020 12:52:16 PM
T:\Projects\Brunswick_Regional_W&S_H2GO-3081\AB-Water_Supply&Treatment_Plant\Sheets\WTP\HVAC_Sheets.dgn

DocuSign Envelope ID: ACC6BB65-592B-4B43-85C5-EED2086248C7

H120

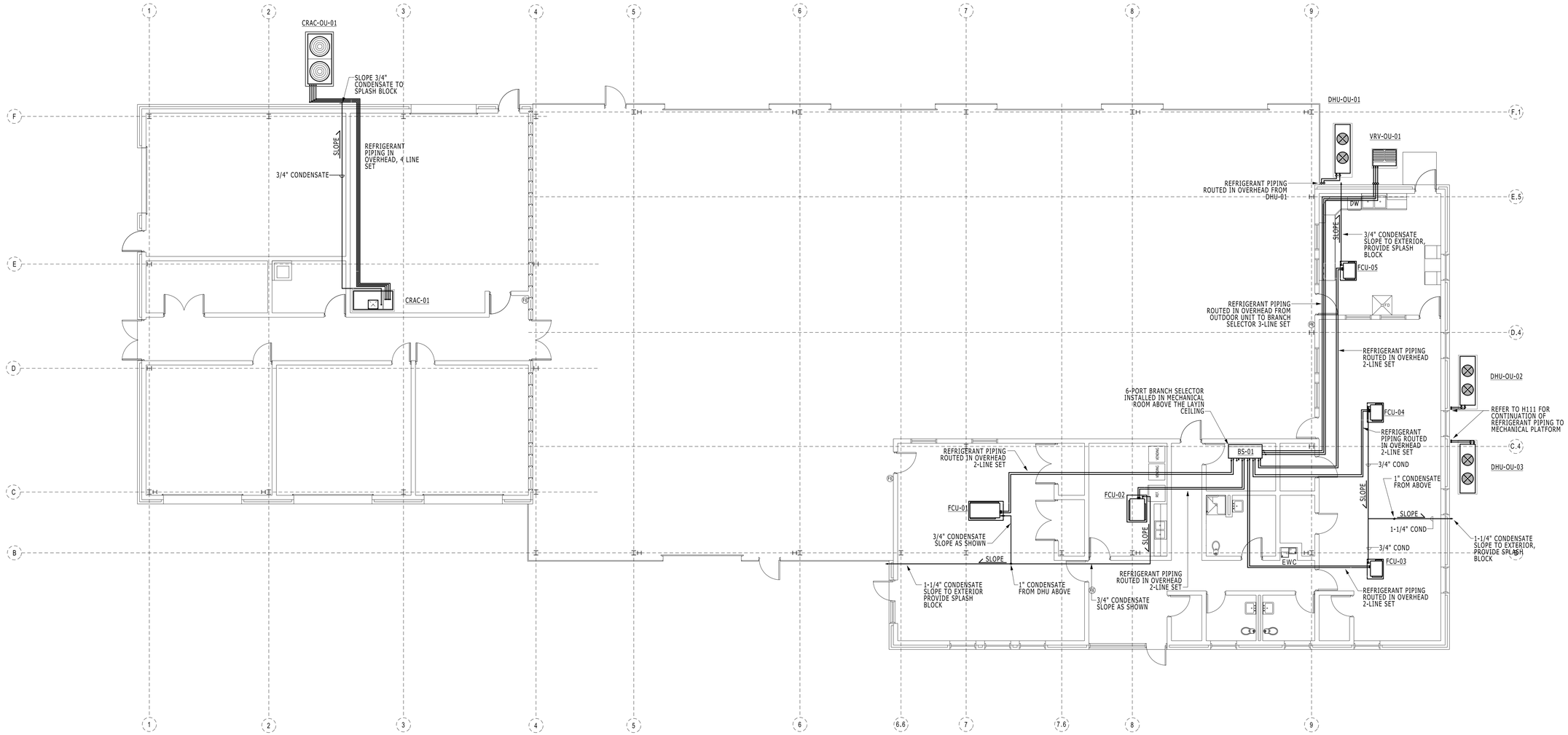

1 H120 HVAC PIPING PLAN
SCALE: 1/8" = 1'

REVISIONS

THE WOOTEN COMPANY
120 North Boylan Avenue Raleigh, NC 27603-1423
919.828.0531 Fax 919.831.1589
License Number: F-0115

BRUNSWICK REGIONAL WATER AND SEWER H2GO
BRUNSWICK COUNTY NORTH CAROLINA
CONTRACT No. 4
REVERSE OSMOSIS WATER TREATMENT PLANT
HVAC PIPING PLAN

NORTH CAROLINA PROFESSIONAL ENGINEER SEAL 039852 GLENN D. BOWMAN

DESIGNED BY:	GDB
DRAWN BY:	GDB
CHECKED BY:	LHM
PROJECT NO.:	3081-AB
DATE:	JUNE 7, 2020
SCALE:	AS NOTED

SHEET 51 OF 181

H120

pdf2013.pltcfg
0:1.0000 "=" / in.
gbowman
6/9/2020 12:52:17 PM
T:\Projects\Brunswick_Regional_W&S_H2GO-3081\AB-Water_Supply&Treatment_Plant\Sheets\WTP\HVAC_Sheets.dgn

DocuSign Envelope ID: ACC6BB65-592B-4B43-85C5-EED2086248C7

H121

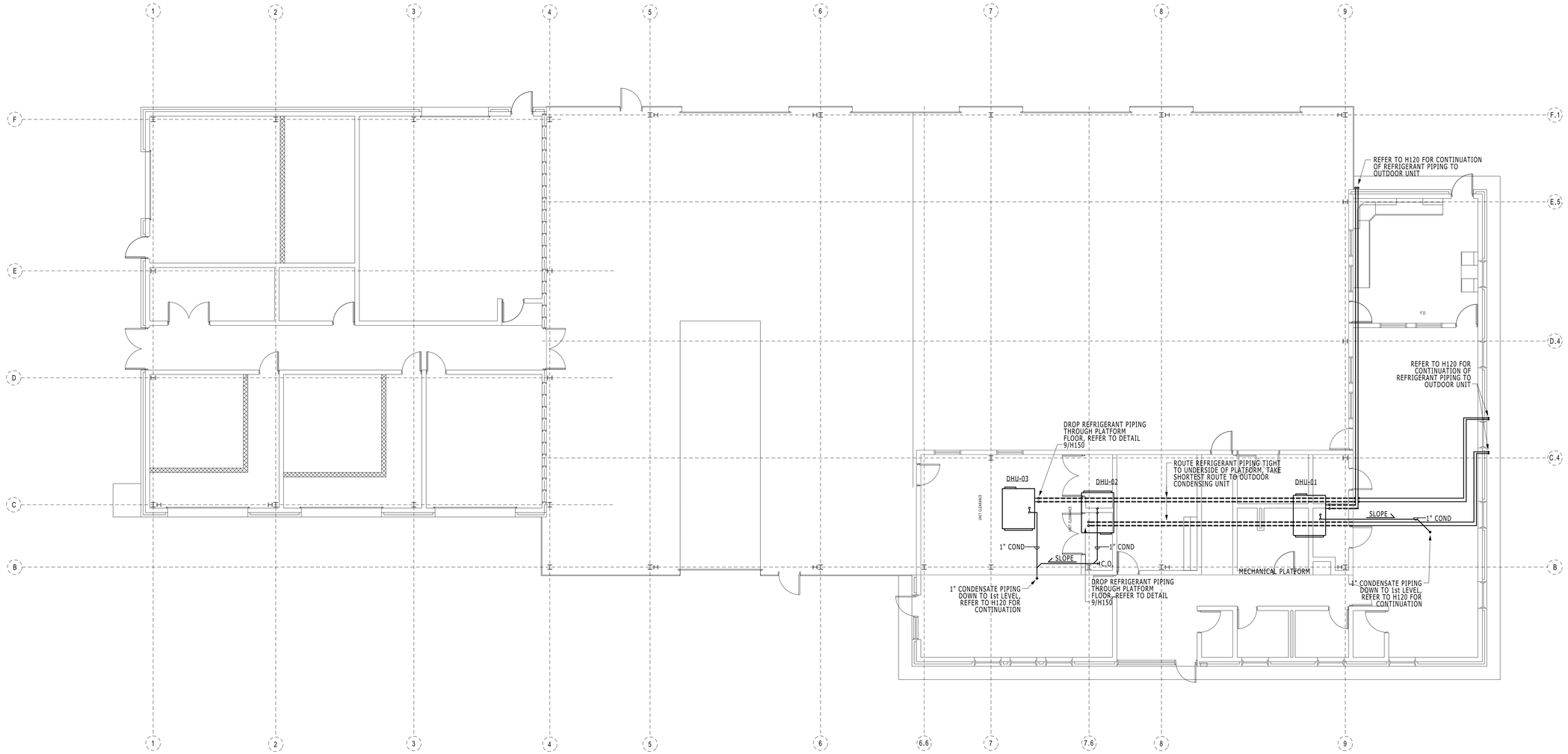

1 H120 HVAC PLATFORM PIPING PLAN
SCALE: 1/8" = 1'

REVISIONS

THE WOOTEN COMPANY
120 North Boylan Avenue Raleigh, NC 27603-1423
919.828.0531 Fax 919.834.3389
License Number: F-1015

BRUNSWICK REGIONAL WATER AND SEWER H2GO
BRUNSWICK COUNTY NORTH CAROLINA
CONTRACT No. 4
REVERSE OSMOSIS WATER TREATMENT PLANT
HVAC PLATFORM PIPING PLAN

NORTH CAROLINA PROFESSIONAL ENGINEER SEAL 039852 GLENN D. BOWMAN

DESIGNED BY:	GDB
DRAWN BY:	GDB
CHECKED BY:	LHM
PROJECT NO.:	3081-AB
DATE:	JUNE 7, 2020
SCALE:	AS NOTED

SHEET 52 OF 181

H121

pdf2013.pltcfg
0:1.0000 "=" / in.
gbowman
6/9/2020 12:52:17 PM
T:\Projects\Brunswick_Regional_W&S_H2GO-3081\AB-Water_Supply&Treatment_Plant\Sheets\WTP\HVAC_Sheets.dgn

DocuSign Envelope ID: ACC6BB65-592B-4B43-85C5-EED2086248C7

H150

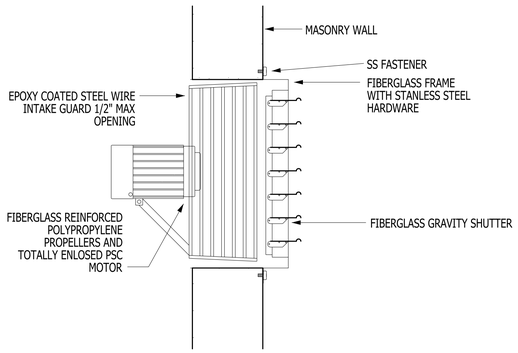

7 H150 SHUTTER MOUNTED EF INSTALLATION DETAIL
NOT TO SCALE

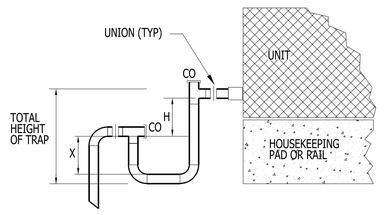

BLOW THROUGH	DRAW THROUGH
X = MIN. 1" PLUS CASING STATIC PRESSURE	X = 1/2 "H"
H = MIN. 1"	H = MIN. 1" PLUS CASING STATIC PRESSURE

8 H150 COIL DRAIN PIPING DETAIL
NOT TO SCALE

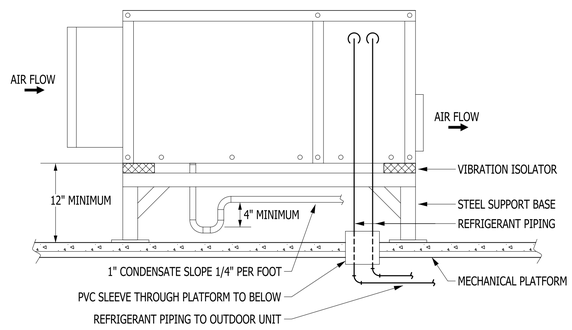

NOTE:
1. MAINTAIN A 2" MINIMUM LIP ABOVE THE PLATFORM FLOOR FOR PVC SLEEVE
2. FABRICATE SUPPORT BASE FROM STEEL, REFER TO DIVISION 9 FOR PAINTING REQUIREMENTS

9 H150 DEHUMIDIFICATION UNIT INSTALLATION DETAIL
NOT TO SCALE

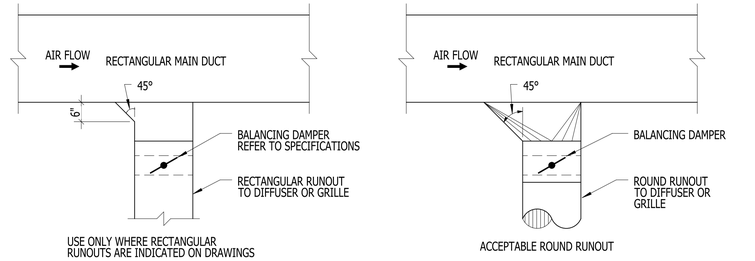

4 H150 RUN OT AND BRANCH CONNECTION DETAIL
NOT TO SCALE

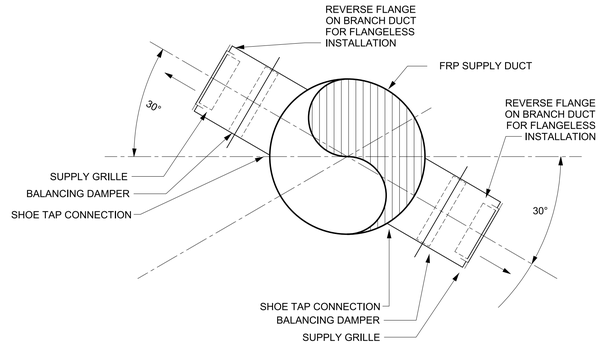

5 H150 PROCESS ROOM DUCT AND DIFFUSER INSTALLATION DETAIL
NOT TO SCALE

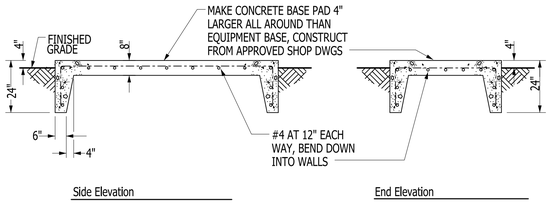

6 H150 CONCRETE EQUIPMENT PAD INSTALLATION DETAIL
NOT TO SCALE

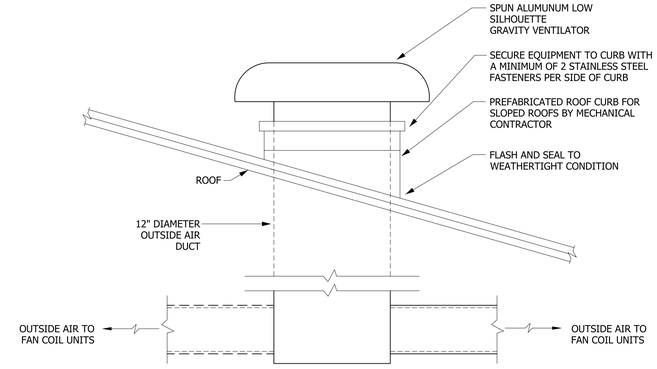

1 H150 GRAVITY VENTILATOR INSTALLATION DETAIL
NOT TO SCALE

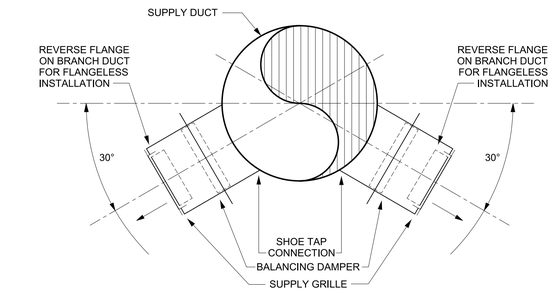

2 H150 ELECTRICAL ROOM DUCT AND DIFFUSER INSTALLATION DETAIL
NOT TO SCALE

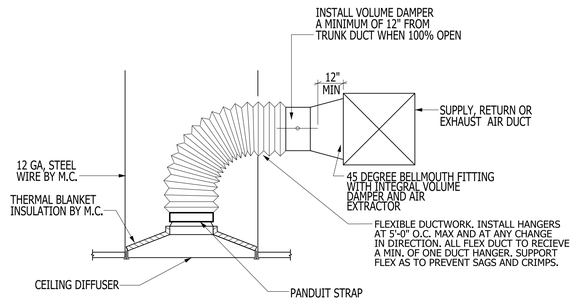

3 H150 FLEXIBLE DUCT TAKEOFF INSTALLATION DETAIL
NOT TO SCALE

REVISIONS

THE WOOTEN COMPANY
120 North Boylan Avenue Raleigh, NC 27603-1423
919.828.0531 Fax 919.834.5389
License Number: F-0115

BRUNSWICK REGIONAL WATER AND SEWER H2GO
BRUNSWICK COUNTY NORTH CAROLINA
CONTRACT No. 4
REVERSE OSMOSIS WATER TREATMENT PLANT

HVAC DETAILS

NORTH CAROLINA PROFESSIONAL ENGINEER SEAL 039852 GLENN D. BOWMAN

DESIGNED BY:	GDB
DRAWN BY:	GDB
CHECKED BY:	LHM
PROJECT NO.:	3081-AB
DATE:	JUNE 7, 2020
SCALE:	AS NOTED

SHEET 53 OF 181

H150

pdf2013.pltcfg
0.1.0000 " = " in.
gbowman
6/9/2020 12:52:18 PM
T:\Projects\Brunswick_Regional_W&S_H2GO-3081\AB-Water_Supply&Treatment_Plant\Sheets\WTP\HVAC_Sheets.dgn

DocuSign Envelope ID: ACC6BB65-592B-4B43-85C5-EED2086248C7

H160

VENTILATION OUTSIDE AIRFLOW SCHEDULE

ROOM NAME	OCCUPANTS	ROOM AREA (ft2)	SA (cfm)	RA (cfm)	OUTSIDE AIR				EA (cfm)
					ROOM TYPE	cfm/person	cfm/sq ft	OA (cfm)	
101 Meeting	40	785	1,130		CONFERENCE	5	0.06	247	0
102 Closet	0	32	NA		STORAGE	0	0.12	4	0
103 Closet	0	34	NA		STORAGE	0	0.12	4	0
FCU-01			**1,130**					**255**	
100 Lobby	2	153	280	250	OFFICE	5	0.06	19	0
104 Break Room	4	208	250	250	MULTI-PURPOSE	5	0.06	32	50
105 Closet	0	23	0	0	STORAGE	0	0.12	3	0
107 Toilet	0	53	0	0	RESTROOM	0	0	0	50
108 Locker	0	100	50	0	RESTROOM	0	0	0	50
109 Toilet	0	56	0	0	RESTROOM	0	0	0	50
111 Closet	0	32	0	0	STORAGE	0	0.12	4	0
113 Closet	0	39	0	0	STORAGE	0	0.12	5	0
A01 Corridor	0	84	100	125	CORRIDOR	0	0.06	5	0
106 Mech/Elec	0	78	50	0	MECH/ELEC	0	0	0	0
A02 Corridor	0	106	150	0	CORRIDOR	0	0.06	6	0
FCU-02			**880**	**625**				**74**	**200**
112 Server	0	50	0	50	MECH/ELEC	0	0	0	0
110 Office	2	410	340	200	OFFICE	5	0.06	35	0
FCU-03			**340**	**250**				**35**	
114 Control Room	2	466	340	300	OFFICE	5	0.06	38	0
FCU-04			**340**	**300**				**38**	
115 Lab	2	348	340	300	OFFICE	5	0.06	31	0
FCU-05			**340**	**300**				**31**	

REGISTER AND DIFFUSER SCHEDULE

LETTER DESIG	MANUFACTURER	MODEL NUMBER	SUPPLY				RETURN/EXHAUST			MAX NC LEVELS	REMARKS
			DIFFUSER		PANEL DIMS	CFM RANGE	NECK SIZE	PANEL DIMS	CFM RANGE		
			NECK SIZE	BLOW							
A	TITUS	TDC	6"	4-WAY	24x24	10-100				30	1
B	TITUS	TDC	8"	4-WAY	24x24	101-235				30	1
C	TITUS	TDC	10"	4-WAY	24x24	236-400				30	1
D	TITUS	TDC	6"	4-WAY	12x12	0-150				30	1
E	TITUS	DL	20" x 10"	2-WAY	23x12	438-875				20	1,3
F	ACCORD	956	10"	PERF	24x24	0-200				NA	2,5
AA	TITUS	PAR					6"	12x12	10-100	<13	1,2
BB	TITUS	PAR					8"	24x24	101-235	21	1,2
CC	TITUS	PAR					10"	24x24	236-382	20	1,2
DD	AWV	LE-27					44x44	48x48	6900	NA	4,5
EE	ACCORD	956					6"	24x24	0-100	NA	2,5

REMARKS:

1. FACE OF DIFFUSER/REGISTER/GRILLE TO BE WHITE
2. PROVIDE TRANSITION FROM SQUARE NECK SIZE TO BRANCH SIZE INDICATED ON PLANS.
3. PROVIDE ALUMINUM GRILLE WITH CORROSION RESISTANT COATING APPLIED BY THE MANUFACTURER
4. ALUMINUM BAR GRILLE, FINISH TO BE PICKED FROM STANDARD FINISHES BY ARCHITECT.
5. PROVIDE CORROSION RESISTANT PAINT COATING APPLIED BY MANUFACTURER

FAN SCHEDULE

FAN	MANUFACTURER	M/N	TYPE	SIZE	SERVICE	CFM	SP (IN H20)	MOTOR RPM	MOTOR DATA		INSTALLATION HEIGHT	CONTROL METHOD	NOTES
									MOTOR Hp	VOLTS/HZ/PH			
EF-01	DAYTON	1BLH8	SHUTTER MOUNT EXHAUST FAN	12"ø	VENTILATION	975	0.1	1,625	1/8	115/60/1	10'-0" AFF	THERMOSTAT	1,2,3
EF-02	DAYTON	1BLH6	SHUTTER MOUNT EXHAUST FAN	10"ø	VENTILATION	540	0.1	1,550	1/20	115/60/1	10'-0" AFF	THERMOSTAT	1,2,3
EF-03	DAYTON	1BLH6	SHUTTER MOUNT EXHAUST FAN	10"ø	VENTILATION	500	0.1	1,550	1/20	115/60/1	10'-0" AFF	THERMOSTAT	1,2,3
EF-04	DAYTON	1BLH6	SHUTTER MOUNT EXHAUST FAN	10"ø	VENTILATION	560	0.1	1,550	1/20	115/60/1	2'-0" AFF	THERMOSTAT	1,2,3
EF-05	GREENHECK	SQ-85-D	INLINE	12"ø	GENERAL/TOILET	200	0.539	1,550	1/12	115/60/1	ABOVE CEILING	INTERLOCKED	3,4,5
EF-06	TWIN CITY	7SA2	WALL VENTILATOR	7"	GENERAL	190	0.25	1,550	1/15	115/60/1	14'-0" AFF	CONTINUOUS	3,4

REMARKS:

1. PROVIDE CORROSION RESISTANT SHUTTER MOUNT EXHAUST FAN
2. PROVIDE WALL MOUNTED LINE VOLTAGE THERMOSTAT WITH HAND, OFF, AUTO SETTINGS COORDINATE WITH THE ELECTRICAL CONTRACTOR
3. PROVIDE SPEED CONTROLLER FOR ALL DIRECT DRIVE FANS.
4. PROVIDE FLEXIBLE DUCT CONNECTION FOR INLET AND OUTLET OF FAN
5. PROVIDE HARD WIRED INTERLOCK WITH SUPPLY FAN FOR FCU-02 (WHEN FCU-02 IS **ON**, EF-05 IS **ON**; WHEN FCU-02 IS **OFF**, EF-05 IS **OFF**)

LOUVER SCHEDULE

LV #	MODEL NUMBER	TYPE	DESCRIPTION	SIZE (INCHES)			VOLUME (cfm)	VELOCITY (fpm)	FREE AREA (ft^2)	INSTALLATION HEIGHT	REMARKS
				HEIGHT	WIDTH	DEPTH					
LV-01	CUSTOM	INTAKE	FIXED BLADE FRP LOUVER	24	24	4	940	631	1.49	9'-4" AFF	
LV-02	CUSTOM	INTAKE	FIXED BLADE FRP LOUVER	24	24	4	540	362	1.49	2'-0" AFF	1,2
LV-03	CUSTOM	INTAKE	FIXED BLADE FRP LOUVER	24	24	4	500	336	1.49	2'-0" AFF	1,2
LV-04	CUSTOM	INTAKE	FIXED BLADE FRP LOUVER	24	24	4	560	376	1.49	9'-4" AFF	
LV-05	GREENHECK/ESD-403	EXHAUST	FIXED BLADE LOUVER	12	16	4	225	1007	0.66	10'-6" AFF	4,5
LV-06	GREENHECK/ESD-403	INTAKE	FIXED BLADE LOUVER	12	18	4	450	896	0.50	20'-6"	4,5

REMARKS:

1. PROVIDE FLUSH MOUNTED RAIN RESISTANT FRP LOUVER, COORDINATE COLOR WITH GENERAL CONTRACTOR
2. PROVIDE INSECT SCREEN, FRP BACKDRAFT DAMPER AND RAIN HOOD
3. PROVIDE FRP DUCT TO INTERIOR PORTION OF ROOM, REFER TO MECHANICAL FLOOR PLAN
4. PROVIDE INSECT SCREEN, BACKDRAFT DAMPER, COORDINATE COLOR WITH ARCHITECT
5. COORDINATE COLOR WITH ARCHITECT

GRAVITY VENTILATOR SCHEDULE

LV #	MANUFACTURER	TYPE	MODEL NUMBER	DIAMETER (in)	THROAT AREA (ft2)	VOLUME (cfm)	VELOCITY (fpm)	REMARKS
GV-01	GREENHECK	INTAKE	GRSI-12	12	0.82	600	732	1,2,3
GV-02	GREENHECK	INTAKE	GRSI-8	12	0.37	190	324	1,2

REMARKS:

1. PROVIDE ROOF CURB, INSECT SCREEN AND BACKDRAFT DAMPER
2. COORDINATE LOUVER COLOR WITH ARCHITECT
2. PROVIDE MANUAL VOLUME DAMPER IN OUTSIDE AIR DUCT TO TO EACH FCU

ELECTRIC RADIANT UNIT HEATER SCHEDULE

UNIT NO.	MANUFACTURER	M/N	LOCATION	ROOM AREA (ft^2)	HEATER ELEMENT			HEATING DENSITY (Watts/ft^2)	REMARKS
					KW	VOLTS	PHASE		
ERH-01	RAYWALL	343-60-THSS-480V	SODIUM HYPOCHLORIDE ROOM 123	674	7.5	480	1	33.4	1,3,4,6
ERH-02	RAYWALL	343-60-THSS-480V			7.5	480	1		1,3,4,6
ERH-03	RAYWALL	343-60-THSS-480V			7.5	480	1		1,3,4,6
ERH-04	RAYWALL	222-60-THSS-277V	CAUSTIC ROOM 119	400	3.2	277	1	16.0	1,2,3,5,6
ERH-05	RAYWALL	222-60-THSS-277V			3.2	277	1		1,2,3,5,6
ERH-06	RAYWALL	222-60-THSS-277V	CORROSION INHIBITOR ROOM 118	360	3.2	277	1	17.8	1,2,3,5,6
ERH-07	RAYWALL	222-60-THSS-277V			3.2	277	1		1,2,3,5,6
ERH-08	RAYWALL	222-60-THSS-277V	SHOP/STORAGE ROOM 118	400	3.2	277	1	16.0	1,2,3,5,6
ERH-09	RAYWALL	222-60-THSS-277V			3.2	277	1		1,2,3,5,6
ERH-10	RAYWALL	CP705	STORAGE CLOSET 120	149	0.5	277	1	3.4	1,3,4
ERH-11	RAYWALL	CP705			0.5	277	1	6.7	1,3,4
ERH-12	RAYWALL	CP705	JANITOR CLOSET 121	90	0.5	277	1	7.7	1,3,6
ERH-13	RAYWALL	CP707	A03 CORRIDOR	391	0.75	277	1		1,3,6
ERH-14	RAYWALL	CP707			0.75	277	1		1,3,6
ERH-15	RAYWALL	CP707			0.75	277	1		1,3,6
ERH-16	RAYWALL	CP707			0.75	277	1		1,3,6

REMARKS

1. MAINTAIN MANUFACTURERS RECOMMENDED CLEARANCE FROM COMBUSTIBLES
2. PROVIDE WALL MOUNTING BRACKET AND HARDWARE FOR INSTALLATION 10" AFF
3. PROVIDE SILICON SEALED METAL PARTS FOR HIGH HUMIDITY APPLICATION
4. PROVIDE MOUNTING BRACKET AND HARDWARE FOR SUSPENDED INSTALLATION AT 12" AFF
5. UNIT SHALL HAVE 60° ASYMMETRIC REFLETOR PATTERN
6. PROVIDE A SINGLE LINE VOLTAGE THERMOSTAT FOR MULTIPLE HEATER CONTROL

REVISIONS

THE WOOTEN COMPANY
120 North Boylan Avenue Raleigh, NC 27603-1423
919.828.0531 Fax 919.831.1589
License Number: F-0115

BRUNSWICK REGIONAL WATER AND SEWER H2GO
BRUNSWICK COUNTY NORTH CAROLINA
CONTRACT No. 4
REVERSE OSMOSIS WATER TREATMENT PLANT
HVAC SCHEDULES

NORTH CAROLINA PROFESSIONAL SEAL 039852 ENGINEER GLENN D. BOWMAN

DESIGNED BY: GDB
DRAWN BY: GDB
CHECKED BY: LHM
PROJECT NO.: 3081-AB
DATE: JUNE 7, 2020
SCALE: AS NOTED

SHEET 54 OF 181

H160

pdf2013.pltcfg
0:1.0000 " / in.
gbowman
6/9/2020 12:52:18 PM
T:\Projects\Brunswick_Regional_W&S_H2GO-3081\AB-Water_Supply&Treatment_Plant Sheets\WTP\HVAC_Sheets.dgn

DocuSign Envelope ID: ACC6BB65-592B-4B43-85C5-EED2086248C7

H161

FAN COIL UNIT SCHEDULE

FCU	MANUFACTURER	M/N	TYPE	ROOM SERVED	AIRFLOW					ELECTRICAL SERVICE				BTUH COOLING		BTUH HEATING	FILTERS		REMARKS
					SA (cfm)	RA (cfm)	OA (cfm)	EXT S.P. (in w.c.)	MOTOR Kw	VOLTS	PHASE	MCA	MFA	TOTAL	SENSIBLE		SIZE	TYPE	
FCU-01	DAIKIN	FXMQ36	SUSPENDED, DUCTED	MEETING 101	1130	870	260	0.2	0.35	208	1	2.9	15	30,440	24,950	41,492	1"	MERV-8	1,2,3
FCU-02	DAIKIN	FXMQ30	SUSPENDED, DUCTED	BREAKROOM/LOBBY/TOILETS	880	660	220	0.2	0.35	208	1	2.3	15	25,370	20,712	35,247	1"	MERV-8	1,2,3
FCU-03	DAIKIN	FXMQ12	SUSPENDED, DUCTED	OFFICE 110	340	300	40	0.2	0.09	208	1	0.6	15	10,158	8,455	13,990	1"	MERV-8	1,2,3
FCU-04	DAIKIN	FXMQ12	SUSPENDED, DUCTED	CONTROL 114	340	300	40	0.2	0.09	208	1	0.6	15	10,158	8,455	13,990	1"	MERV-8	1,2,3
FCU-05	DAIKIN	FXMQ12	SUSPENDED, DUCTED	LAB 115	340	300	40	0.2	0.09	208	1	0.6	15	10,158	8,455	13,990	1"	MERV-8	1,2,3
							600												

REMARKS

1. PROVIDE SECONDARY DRAIN PAN AND FLOAT SWITCH INTERLOCKED WITH ON/OFF CONTROL FOR UNIT
2. INSTALL WITHIN 12" OF DROP CEILING FOR MAINTENACE ACCESS THROUGH CEILING
3. INSTALL IN ACCORDANCE WITH MANUFACTURERS RECOMMENDATIONS AND RECOMMENDED CLEARANCE
4. PROVIDE FILTER ON SUCTION SIDE OF UNIT, ACCESIBLE FOR REPLACEMENT THROUGH CEILING TILE

VRV OUTDOOR UNIT SCHEDULE

DESIGNATION	MANUFACTURER	M/N	CAPACITY		POWER				REFFRIGERANT	EER	REMARKS
			TOTAL COOLING MBH	TOTAL HEATING MBH	VOLTAGE	PHASE	MCA	MFA			
VRV-OU-01	DAIKIN	REYQ144	116,915	124,943	460	3	31.9	40.0	R-410A	12.9	1,2,3

REMARKS:

1. LOCATE OUTDOOR UNITS ON 4" THICK CONCRETE EQUIPMENT PAD, REFER TO EQUIPMENT PAD DETAIL
2. PROVIDE FACTORY SEA COAST COATING FOR OUTDOOR COIL
3. INSTALL IN ACCORDANCE WITH MANUFACTURERS RECOMMENDED CLEARANCE

VRV BRANCH SELECTOR UNIT SCHEDULE

DESIGNATION	MANUFACTURER	M/N	CAPACITY		POWER				REFFRIGERANT	DIMENSIONS (in.)	REMARKS
			TOTAL COOLING MBH	TOTAL HEATING MBH	VOLTAGE	PHASE	MCA	MFA			
BS-01	DAIKIN	BS6Q54TVJ	116,915	124,943	230	1	0.6	15.0	R-410A	22.8 X 11.7 X 18.9	1,2

REMARKS:

1. INSTALL IN OVERHEAD SPACE OF MECHANICAL ROOM ABOVE LAYIN CEILING
2. INSTALL IN ACCORDANCE WITH MANUFACTURERS RECOMMEND ORIENTATION AND CLEARANCE

DEHUMIDIFICATION UNIT SCHEDULE

DHU	MANUFACTURER	M/N	TYPE	ROOM SERVED	AIRFLOW						ELECTRICAL SERVICE				MRE (lbs/hr)	COOLING (MBH)		REHEAT CAPACITY (MBH)	REFRIGERANT	FILTERS		REMARKS
					SA (cfm)	RA (cfm)	OA (cfm)	ESP (in w.c.)	HP	MOTOR Kw	VOLTS	PHASE	MCA	MFA		TOTAL	SENSIBLE			SIZE	TYPE	
DHU-01	DESERT AIRE	LW12	SUSPENDED, DUCTED	FILTER ROOM	6,900	6,750	150	0.5	5.0	19.3	460	3	36	50	41.5	122.0	77.7	84.6	R-407C	1"	MERV-8	1,2,3,4
DHU-02	DESERT AIRE	LW12	SUSPENDED, DUCTED	FILTER ROOM	6,900	6,750	150	0.5	5.0	19.3	460	3	36	50	41.5	122.0	77.7	84.6	R-407C	1"	MERV-8	1,2,3,4
DHU-03	DESERT AIRE	LW12	SUSPENDED, DUCTED	FILTER ROOM	6,900	6,750	150	0.5	5.0	19.3	460	3	36	50	41.5	122.0	77.7	84.6	R-407C	1"	MERV-8	1,2,3,4

REMARKS

1. INSTALL IN ACCORDANCE WITH MANUFACTURERS RECOMMENDATIONS AND RECOMMENDED CLEARANCE
2. PROVIDE DUCT MOUNTED TEMPERTURE AND HUMIDITY SENSOR
3. PROVIDE REMOTE DISPLAY TOUCHSCREEN MONITOR IN CONTROL ROOM AS INDICATED ON PLANS
4. PROVIDE UNIT WITH DEFROST CYCLE

DEHUMIDIFICATION UNIT OUTDOOR UNIT SCHEDULE

DESIGNATION	MANUFACTURER	M/N	CAPACITY	POWER						REFFRIGERANT	EER	REMARKS
			TOTAL HEAT REJECTION (MBH)	VOLTAGE	PHASE	FLA	MCA	MOP	Kw			
DHU-OU-01	DESERT AIRE	RC5S079K	168	460	3	4.0	6	8	2.1	R-407C	12.0	1,2,3
DHU-OU-02	DESERT AIRE	RC5S079K	168	460	3	4.0	6	8	2.1	R-407C	12.0	1,2,3
DHU-OU-O3	DESERT AIRE	RC5S079K	168	460	3	4.0	6	8	2.1	R-407C	12.0	1,2,3

REMARKS:

1. LOCATE OUTDOOR UNITS ON 4" THICK CONCRETE EQUIPMENT PAD, REFER TO EQUIPMENT PAD DETAIL
2. PROVIDE FACTORY APPLIED ELECTROFIN E-COAT COATING FOR OUTDOOR COIL
3. INSTALL IN ACCORDANCE WITH MANUFACTURERS RECOMMENDED CLEARANCE
4. PROVIDE UNITARY CONTROLLER EQUAL TO CM3540 SERIES REMOTE DISPLAY TERMINAL, AND DUCT MOUNTED TEMPERTURE AND RH SENSOR

COMPUTER ROOM AIR CONDITIONING UNITS

INDOOR UNIT													OUTDOOR UNIT						REMARKS
DESIGNATION	MANUFACTURER	M/N	DISCHARGE	LOCATION	SUPPLY FAN			COOLING CAPACITY			POWER			DESIGNATION	MANUFACTURER	M/N	POWER			
					CFM	ESP (in. w.c.)	HP	TOTAL COOLING MBH	SENSIBLE COOLING MBH	ROOM DB/WB	VOLTAGE	PHASE	FLA				VOLTAGE	PHASE	FLA	
CRAC-01	LIEBERT	VS035	UPFLOW	ELECTRICAL 122	5,200	0.5	5.0	130.8	123.2	80/63	480	3	27.6	CRAC-OU-01	LIEBERT	MCM056	460	3	2.8	1,2,3,4

REMARKS:

1. LOCATE INDOOR AND OUTDOOR UNITS ON 4" THICK CONCRETE EQUIPMENT PAD
2. PROVIDE FACTROY INSTALLED CONDENSATE PUMP WITH INDOOR UNIT
3. PROVIDE E-COAT EPOXY COIL COATING TO OUTDOOR CONDENSING UNIT
4. PROVIDE UNIT WITH SEMI-HERMETIC COMPRESSOR WITH FOUR-STEP COOLING

REVISIONS

THE WOOTEN COMPANY
120 North Boylan Avenue Raleigh, NC 27603-1423
919.828.0531 Fax 919.831.1589
License Number: F-1115

BRUNSWICK REGIONAL WATER AND SEWER H2GO
BRUNSWICK COUNTY NORTH CAROLINA
CONTRACT No. 4
REVERSE OSMOSIS WATER TREATMENT PLANT
HVAC SCHEDULES

NORTH CAROLINA PROFESSIONAL ENGINEER SEAL 039852 GLENN D. BOWMAN

DESIGNED BY: GDB
DRAWN BY: GDB
CHECKED BY: LHM
PROJECT NO.: 3081-AB
DATE: JUNE 7, 2020
SCALE: AS NOTED

SHEET 55 OF 181

H161

pdf2013.pltcfg
0:1.0000 ":" in.
gbowman
6/9/2020 12:52:33 PM
T:\Projects\Brunswick_Regional_W&S_H2GO-3081\AB-Water_Supply&Treatment_Plant\Sheets\WTP\HVAC_Sheets.dgn

Default

SEE DWG M150 FOR CHEMICAL FEED AREA

SEE DWG M101 FOR R.O. TREATMENT AREA

FUTURE BRINE TANK

SODIUM HYPOCHLORITE ROOM

ELECTRICAL ROOM F.F.E. = 30.00

RPZ/ WH / HVAC

JANITOR

SHOP / STORAGE

CORROSION INHIBITOR ROOM

CAUSTIC ROOM

PERMEATE

R.O. SKID

R.O. SKID

R.O. TREATMENT ROOM F.F.E. = 30.00

CARTRIDGE FILTERS

SCALE INHIBITOR FEED

RAW WATER

EWC

MENS

WOMENS

SEE ARCH DWGS FOR ADMIN AREA

CONCENTRATE

C M103

D M103

E M103

A M102

B M102

70'-0"

61'-4"

12'-4"

71'-4"

83'-8"

60'-0"

55'-4"

86'-0"

201'-4"

1 M1 OVERALL FLOOR PLAN

SCALE: 1/8" = 1'-0"

1/8"=1'-0"

8' 6' 4' 2' 0 8'

REVISIONS

THE WOOTEN COMPANY
120 North Boylan Avenue Raleigh, NC 27603-1423
919.828.8531 Fax 919.834.3369
License Number: F-0113

BRUNSWICK REGIONAL WATER AND SEWER H2GO
BRUNSWICK COUNTY NORTH CAROLINA

CONTRACT No. 4

REVERSE OSMOSIS WATER TREATMENT PLANT

TREATMENT BUILDING FLOOR PLAN

NORTH CAROLINA PROFESSIONAL SEAL 040525 ENGINEER CARL W. SCHARF
7 June 20

NORTH CAROLINA PROFESSIONAL SEAL 22531 ENGINEER CHARLES W. DAVIS
7 June 20

DESIGNED BY: CWD
DRAWN BY: PMD/EML
CHECKED BY: CWD
PROJECT NO.: 3081-AB
DATE: JUNE 7, 2020
SCALE: AS NOTED

SHEET 56 OF 181

M100

Print2PDFx.plt
8.0000 " / in.
pdonaghy
6/5/2020 10:16:18 AM
T:\Projects\Brunswick_Regional_W&S_H2CO-3081\AB-Water_Supply&Treatment_Plant\Sheets\WTP\M100-building FLOOR PLAN.dgn

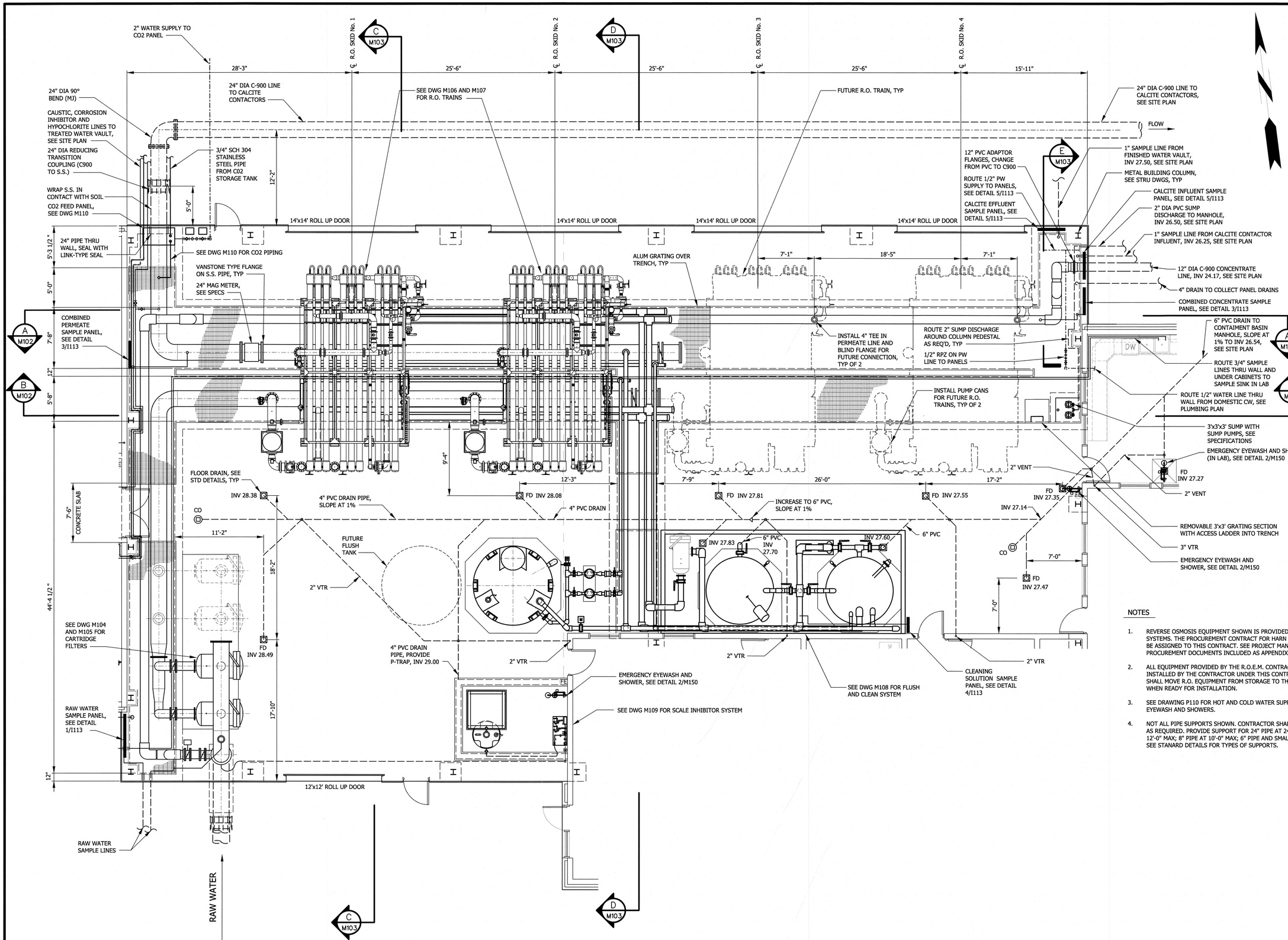

NOTES

1. REVERSE OSMOSIS EQUIPMENT SHOWN IS PROVIDED BY HARN R/O SYSTEMS. THE PROCUREMENT CONTRACT FOR HARN R/O SYSTEMS SHALL BE ASSIGNED TO THIS CONTRACT. SEE PROJECT MANUAL FOR R.O. PROCUREMENT DOCUMENTS INCLUDED AS APPENDIX A.
2. ALL EQUIPMENT PROVIDED BY THE R.O.E.M. CONTRACT SHALL BE INSTALLED BY THE CONTRACTOR UNDER THIS CONTRACT. CONTRACTOR SHALL MOVE R.O. EQUIPMENT FROM STORAGE TO THE PROJECT SITE WHEN READY FOR INSTALLATION.
3. SEE DRAWING P110 FOR HOT AND COLD WATER SUPPLY TO EMERGENCY EYEWASH AND SHOWERS.
4. NOT ALL PIPE SUPPORTS SHOWN. CONTRACTOR SHALL SPACE SUPPORTS AS REQUIRED. PROVIDE SUPPORT FOR 24" PIPE AT 24'-0" MAX; 12" AT 12'-0" MAX; 8" PIPE AT 10'-0" MAX; 6" PIPE AND SMALLER AT 8'-0" MAX. SEE STANARD DETAILS FOR TYPES OF SUPPORTS.

1 M100 R.O. TREATMENT AREA FLOOR PLAN
SCALE: 3/16" = 1'-0"

3/16"=1'-0" 6' 4' 2' 0 5'

REVISIONS

THE WOOTEN COMPANY
120 North Boylan Avenue Raleigh, NC 27603-1423
919.828.0531 fax 919.834.3389
License Number: F-0115

BRUNSWICK REGIONAL WATER AND SEWER H2GO
BRUNSWICK COUNTY NORTH CAROLINA
CONTRACT No. 4
REVERSE OSMOSIS WATER TREATMENT PLANT
RO TREATMENT FLOOR PLAN

NORTH CAROLINA PROFESSIONAL SEAL 040525 ENGINEER CHARLES W. DAVIS
7-June-20

NORTH CAROLINA PROFESSIONAL SEAL 012531 ENGINEER CHARLES W. DAVIS
7-June-20

DESIGNED BY: CWD
DRAWN BY: PMD/EML
CHECKED BY: CWD
PROJECT NO.: 3081-AB
DATE: JUNE 7, 2020
SCALE: AS NOTED

SHEET 57 OF 181

M101

Default

Print2PDFx.plt
5.3333 " / in.
pdonaghy
6/4/2020 5:02:20 PM
T:\Projects\Brunswick_Regional_W&S_H2GO-3081\AB-Water_Supply&Treatment_Plant\Sheets\WTP\M101-RO- FLOOR PLAN.dgn

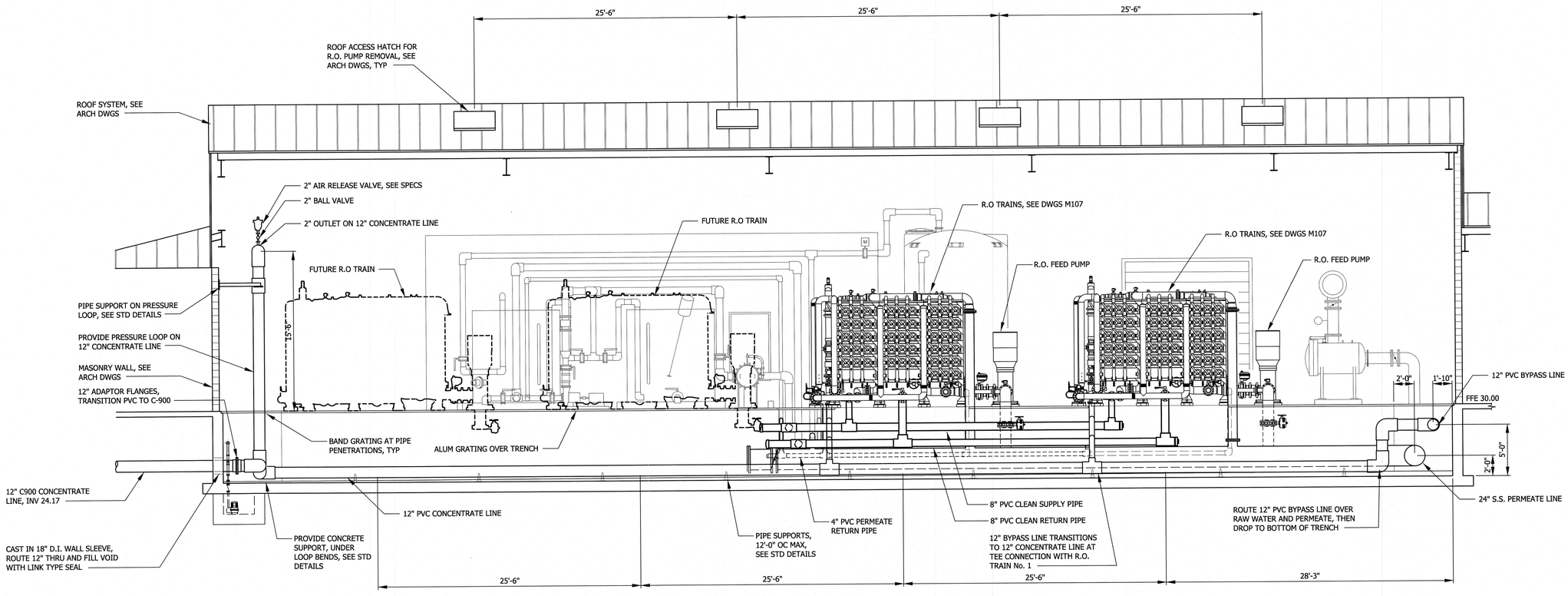

A M100 OVERALL SECTION

SCALE: 3/16" = 1'-0"

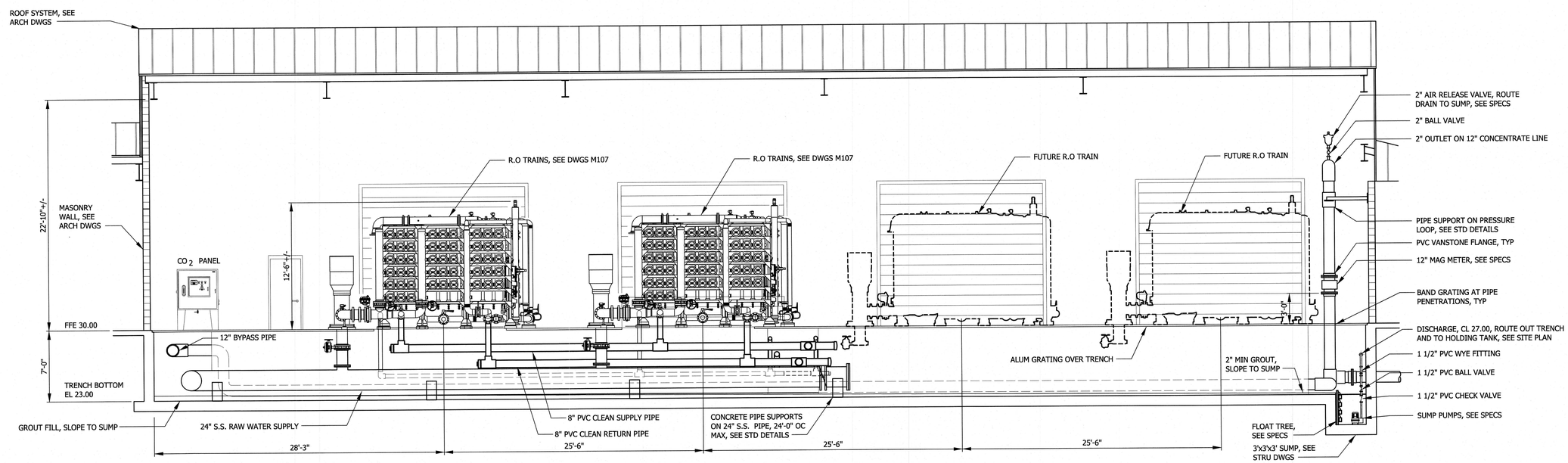

B M100 OVERALL SECTION

SCALE: 3/16" = 1'-0"

3/16"=1'-0" 6' 4' 2' 0 5'

REVISIONS

THE WOOTEN COMPANY
120 North Boylan Avenue Raleigh, NC 27603-1423
919.828.0531 fax 919.834.3589
License Number: F-0115

BRUNSWICK REGIONAL WATER AND SEWER H2GO
BRUNSWICK COUNTY NORTH CAROLINA
CONTRACT No. 4
REVERSE OSMOSIS WATER TREATMENT PLANT

TREATMENT BUILDING SECTIONS

NORTH CAROLINA PROFESSIONAL SEAL 040525 ENGINEER CARY W. SCHROEDER 7-JUNE-20

NORTH CAROLINA PROFESSIONAL SEAL 22531 ENGINEER CHARLES W. DAVIS 7-JUNE-20

DESIGNED BY: CWD
DRAWN BY: PMD/EML
CHECKED BY: CWD
PROJECT NO.: 3081-AB
DATE: JUNE 7, 2020
SCALE: AS NOTED

SHEET 58 OF 181

M102

Default
Print2PDFx.plt
8.0000 ' / in.
pdonaghy
6/4/2020 2:00:16 PM
T:\Projects\Brunswick_Regional_W&S_H2GO-3081\AB-Water_Supply&Treatment_Plant\Sheets\WTP\M102-building SECTIONS.dgn

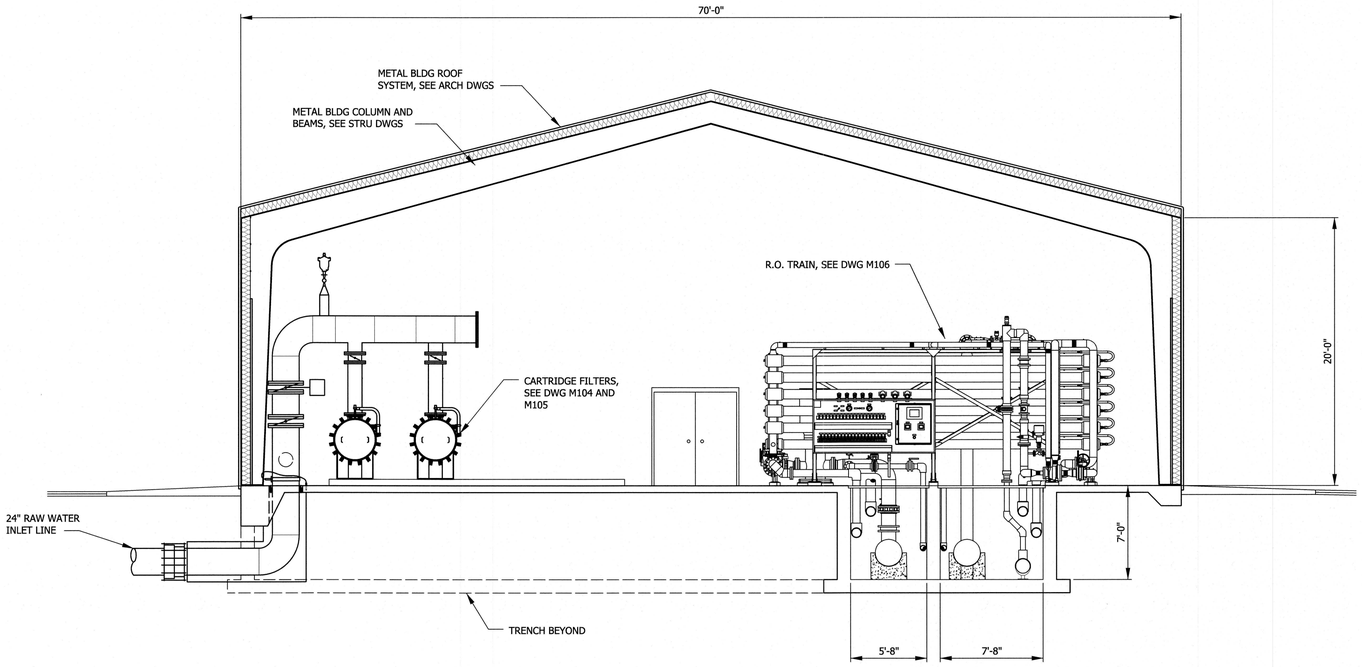

C M100 OVERALL SECTION
SCALE: 3/16" = 1'-0"

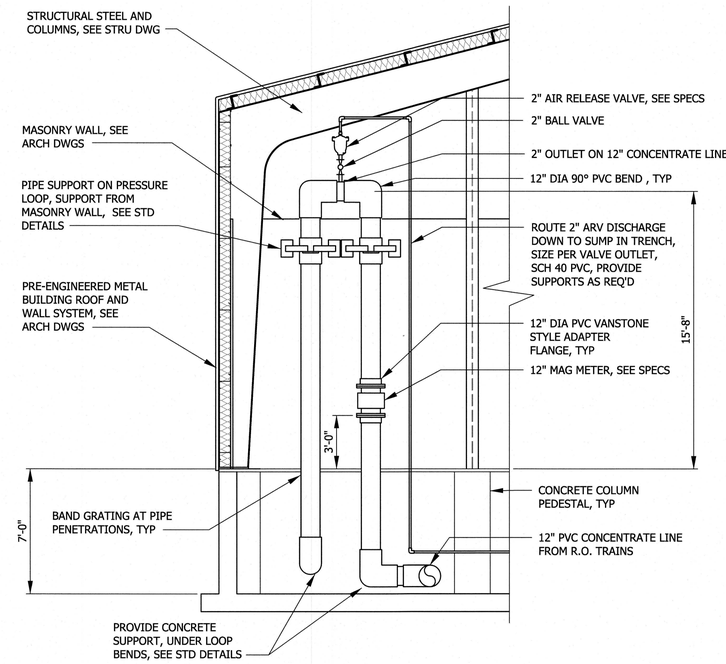

E M100 OVERALL SECTION
SCALE: 1/4" = 1'-0"

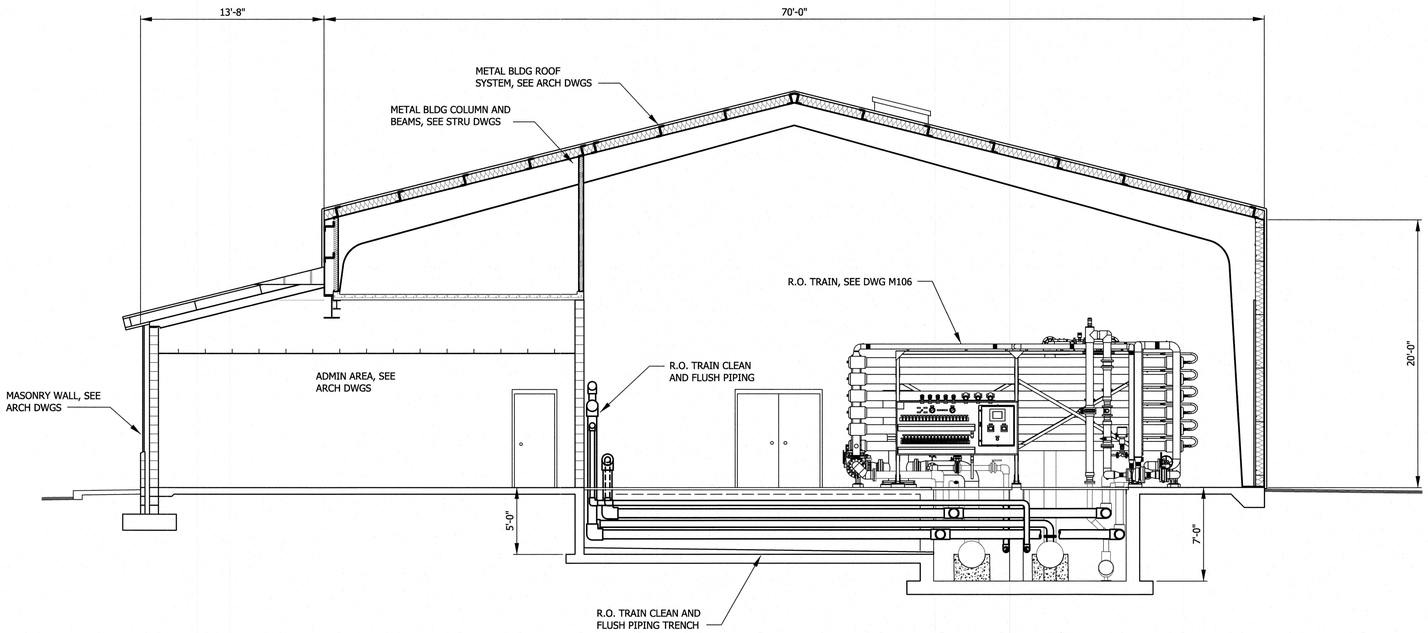

D M100 OVERALL SECTION
SCALE: 3/16" = 1'-0"

1/4"=1'-0" 2' 1' 0 1' 2' 6'

3/16"=1'-0" 6' 4' 2' 0 5'

REVISIONS

THE WOOTEN COMPANY
120 North Boylan Avenue Raleigh, NC 27603-1423
919.828.0531 Fax 919.834.3589
License Number: F-0115

BRUNSWICK REGIONAL WATER AND SEWER H2GO
BRUNSWICK COUNTY NORTH CAROLINA
CONTRACT No. 4
REVERSE OSMOSIS WATER TREATMENT PLANT
TREATMENT BUILDING SECTIONS

NORTH CAROLINA PROFESSIONAL SEAL 040525 ENGINEER MARK W. SCHINKEL
7-JUNE-20

NORTH CAROLINA PROFESSIONAL SEAL 42531 ENGINEER JAMES W. DAVIS
7-JUNE-20

DESIGNED BY: CWD
DRAWN BY: PMD/EML
CHECKED BY: CWD
PROJECT NO.: 3081-AB
DATE: JUNE 7, 2020
SCALE: AS NOTED

SHEET 59 OF 181

M103

Default
Print2PDFx.plt
5.3333 ' / in.
pdonaghy
6/4/2020 2:01:35 PM
T:\Projects\Brunswick_Regional_W&S_H2GO-3081\AB-Water_Supply&Treatment_Plant\Sheets\WTP\M103-building SECTIONS.dgn

Default

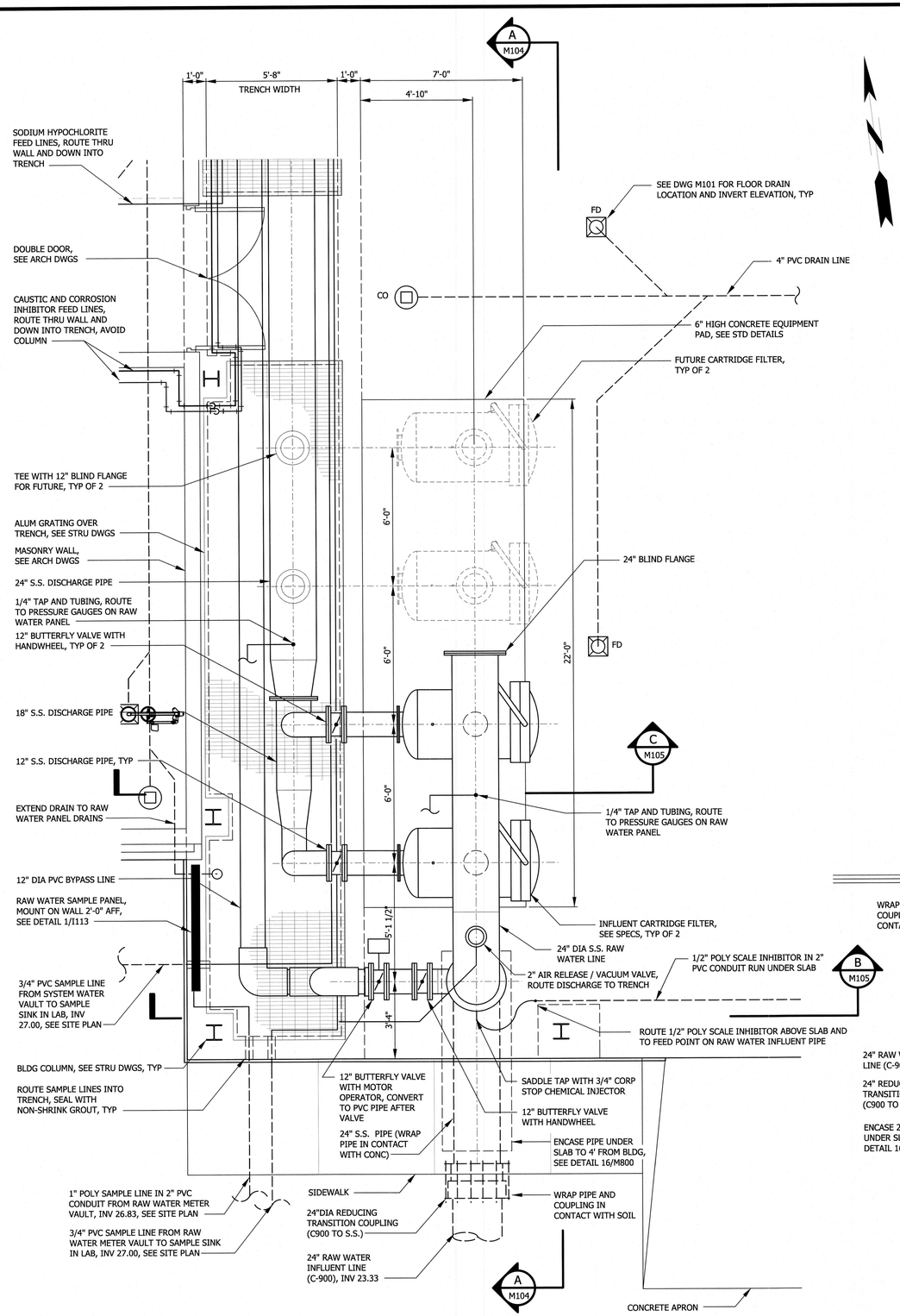

1 M101 CARTRIDGE FILTER PLAN VIEW
SCALE: 3/8" = 1'-0"

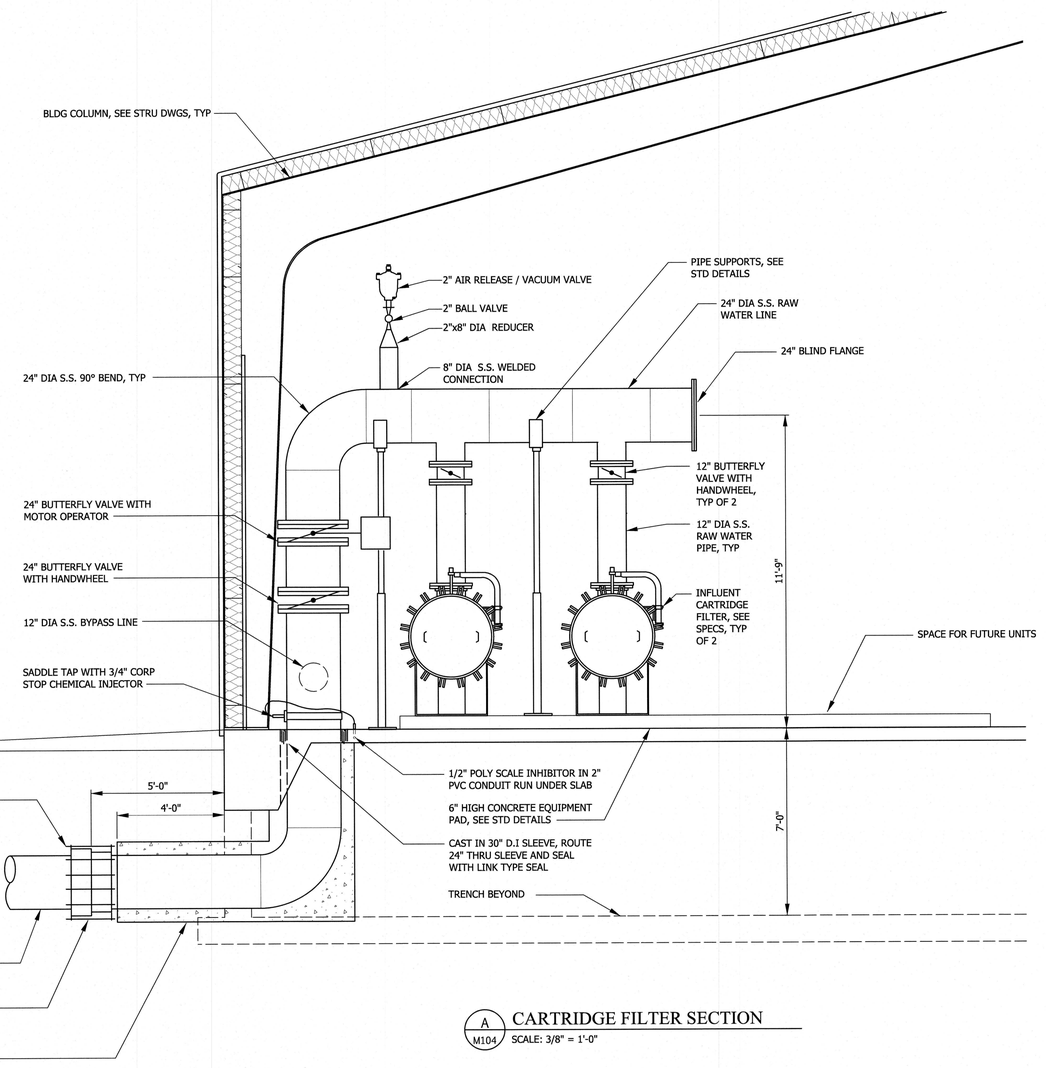

A M104 CARTRIDGE FILTER SECTION
SCALE: 3/8" = 1'-0"

REVISIONS

THE WOOTEN COMPANY
120 North Boylan Avenue Raleigh, NC 27603-1423
919.828.0531 fax 919.834.3589
License Number: F-0115

BRUNSWICK REGIONAL WATER AND SEWER H2GO
BRUNSWICK COUNTY NORTH CAROLINA
CONTRACT No. 4
REVERSE OSMOSIS WATER TREATMENT PLANT
CARTRIDGE FILTERS
PLAN, SECTION AND DETAILS

NORTH CAROLINA PROFESSIONAL SEAL 040525 ENGINEER CHARLES W. SCHMIDT
7-10-20

NORTH CAROLINA PROFESSIONAL SEAL 25311 ENGINEER CHARLES W. DAVIS
7-10-20

DESIGNED BY: CWD
DRAWN BY: PMD/EML
CHECKED BY: CWD
PROJECT NO.: 3081-AB
DATE: JUNE 7, 2020
SCALE: AS NOTED

SHEET 60 OF 181

M104

Print2PDFx.plt
2.6667 ' / in.
pdonaghy
6/4/2020 2:03:38 PM
T:\Projects\Brunswick_Regional_W&S_H2GO-3081\AB-Water_Supply&Treatment_Plant\Sheets\WTP\M104-cartridge filters.dgn

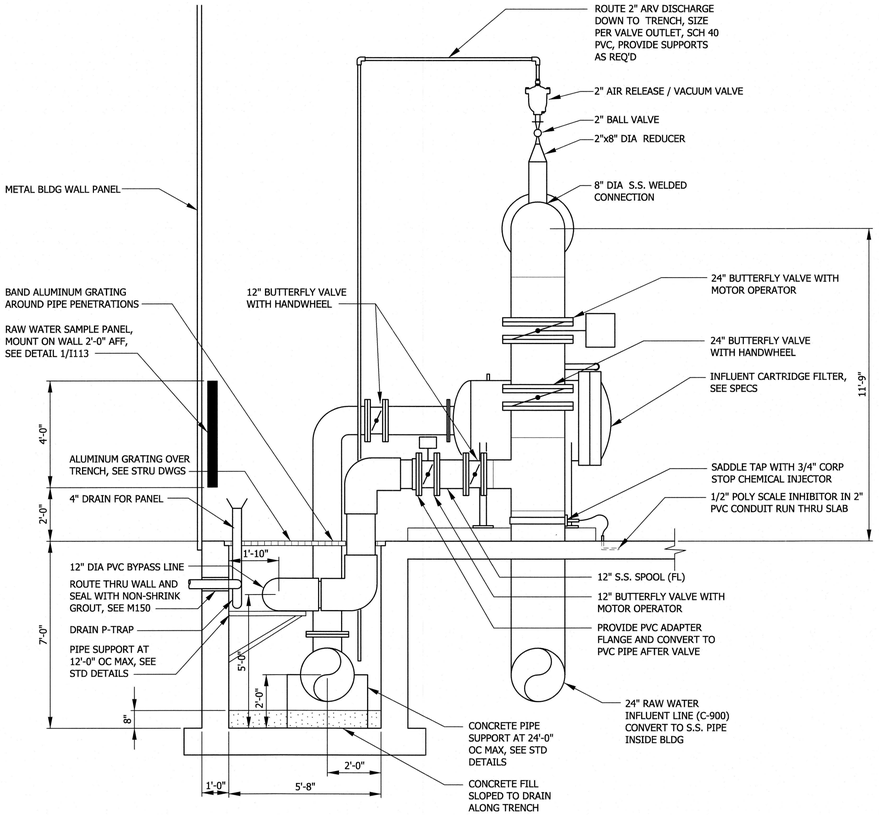

B M104 CARTRIDGE FILTER SECTION
SCALE: 3/8" = 1'-0"

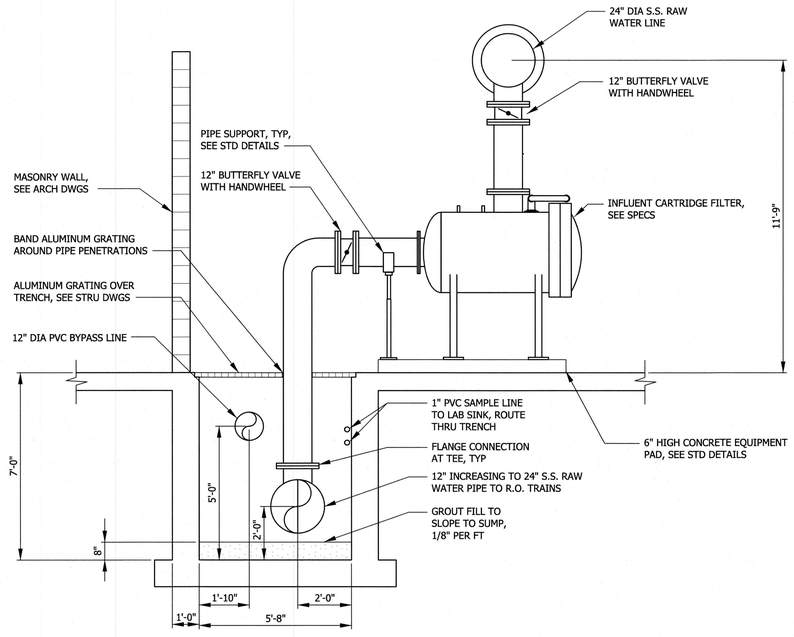

C M104 CARTRIDGE FILTER SECTION
SCALE: 3/8" = 1'-0"

REVISIONS

THE WOOTEN COMPANY
120 North Boylan Avenue Raleigh NC 27603-1423
919.828.0531 fax 919.834.3589
License Number: F-0115

BRUNSWICK REGIONAL WATER AND SEWER H2GO
BRUNSWICK COUNTY NORTH CAROLINA
CONTRACT No. 4
REVERSE OSMOSIS WATER TREATMENT PLANT
CARTRIDGE FILTERS
SECTIONS AND DETAILS

NORTH CAROLINA PROFESSIONAL SEAL 040525 ENGINEER CARL W. SCHARFF
17-June-20

NORTH CAROLINA PROFESSIONAL SEAL 22531 ENGINEER CHARLES W. DAVIS
7-JUNE-20

DESIGNED BY:	CWD
DRAWN BY:	PMD/EML
CHECKED BY:	CWD
PROJECT NO.:	3081-AB
DATE:	JUNE 7, 2020
SCALE:	AS NOTED

SHEET 61 OF 181

M105

Default

Print2PDFx.plt
2.6667 ' / in.
pdonaghy
6/4/2020 2:05:24 PM
T:\Projects\Brunswick_Regional_W&S_H2GO-3081\AB-Water_Supply&Treatment_Plant\Sheets\WTP\M105-cartridge filters.dgn

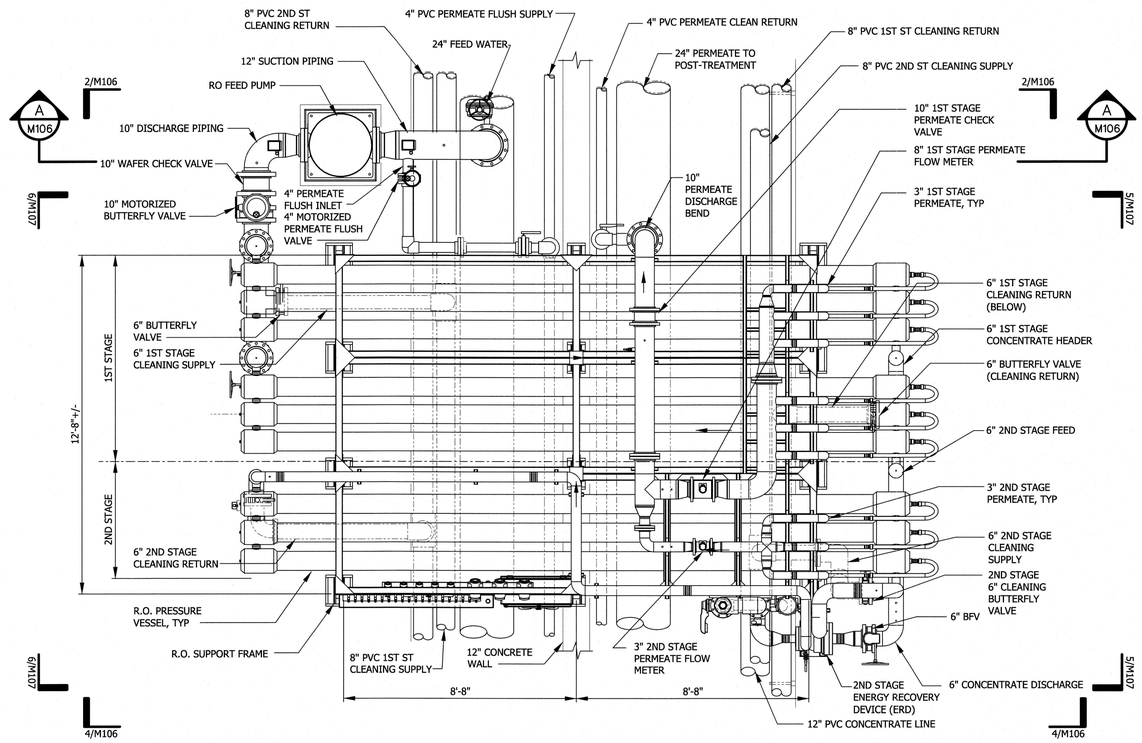

1 M101 **R.O. TREATMENT TRAIN - PLAN VIEW**
SCALE: 3/8" = 1'-0"

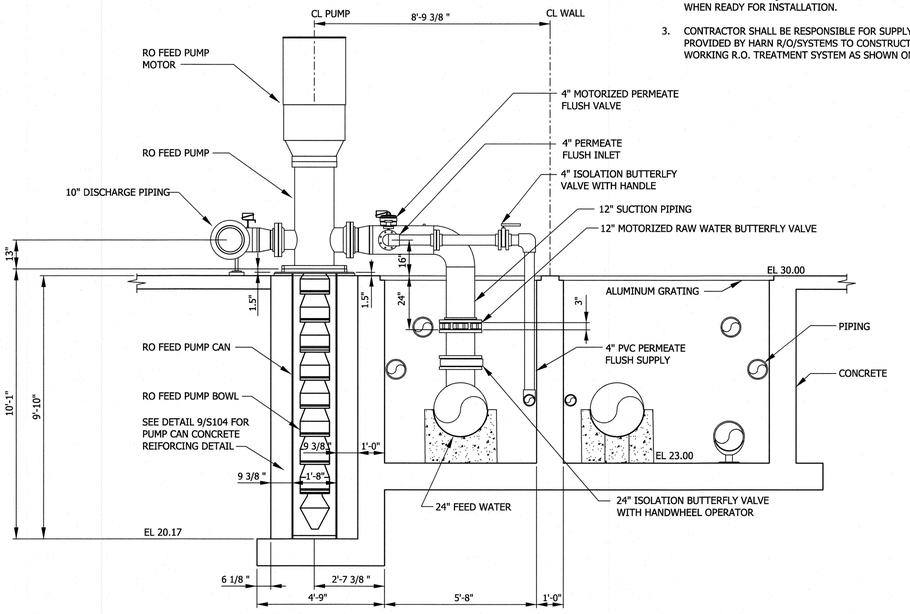

A M106 **R.O. FEED PUMP SECTION**
SCALE: 3/8" = 1'-0"

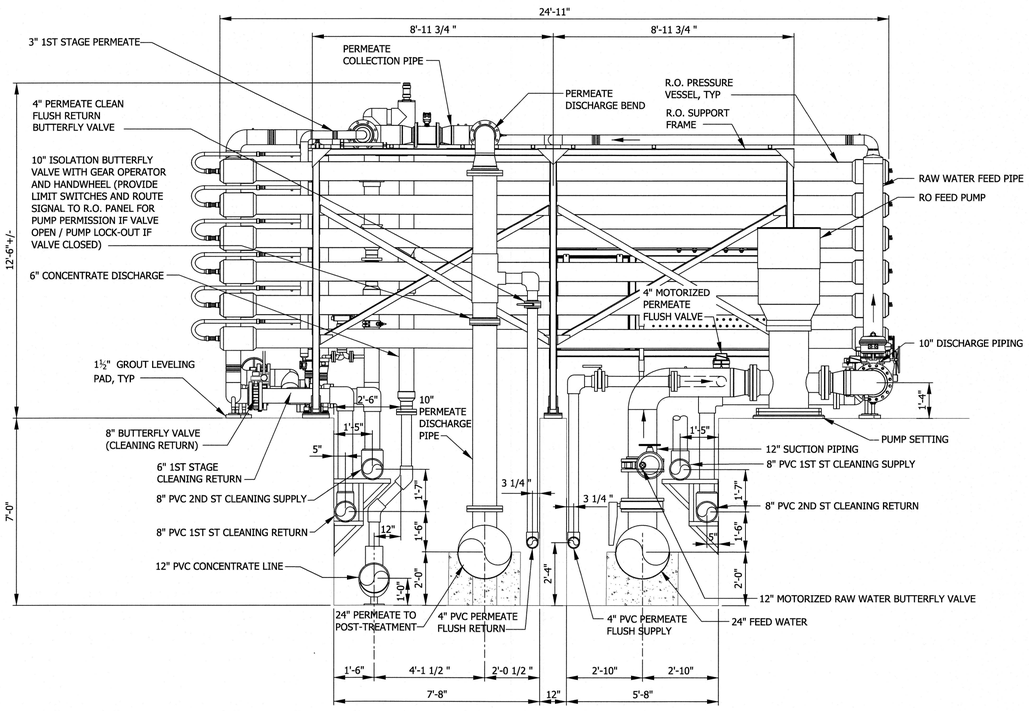

2 M106 **R.O. TREATMENT TRAIN - ELEVATION VIEW**
SCALE: 3/8" = 1'-0"

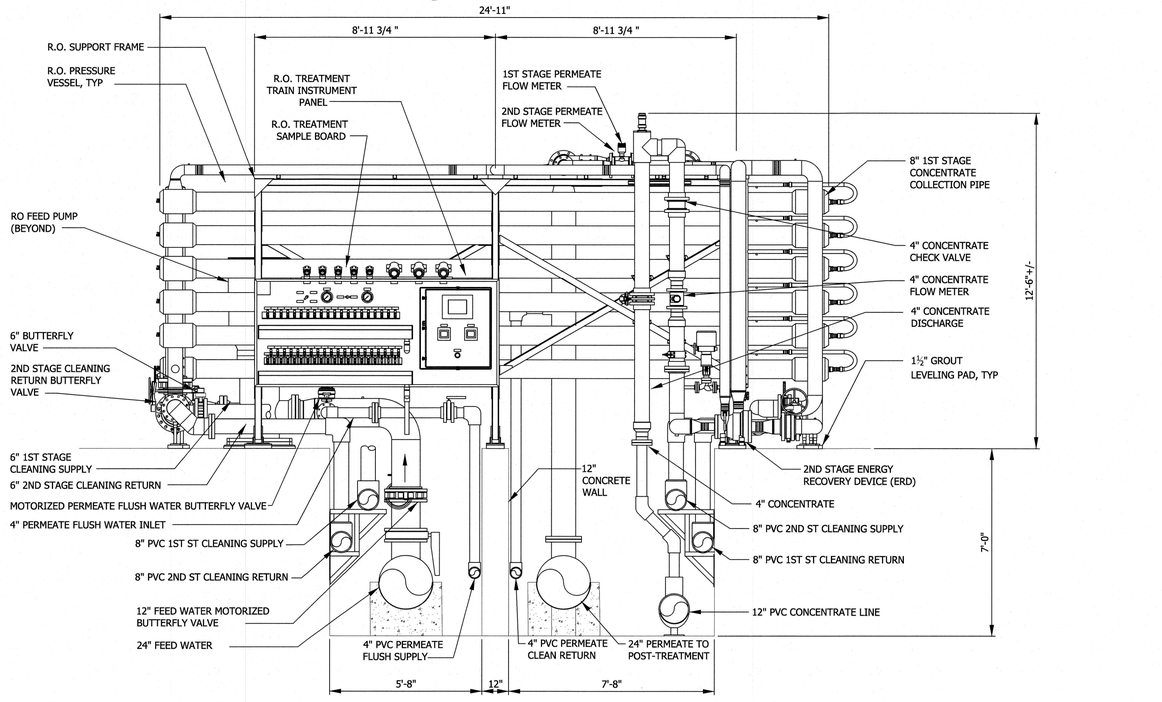

4 M106 **R.O. TREATMENT TRAIN - ELEVATION VIEW**
SCALE: 3/8" = 1'-0"

3/8"=1'-0"

12" 0 1' 2' 4'

NOTES

1. REVERSE OSMOSIS EQUIPMENT SHOWN IS PROVIDED BY HARN R/O SYSTEMS. THE PROCUREMENT CONTRACT FOR HARN R/O SYSTEMS SHALL BE ASSIGNED TO THIS CONTRACT. SEE PROJECT MANUAL FOR R.O. PROCUREMENT DOCUMENTS INCLUDED AS APPEDIX A.
2. ALL EQUIPMENT PROVIDED BY THE R.O.E.M. CONTRACT SHALL BE INSTALLED BY THE CONTRACTOR UNDER THIS CONTRACT. CONTRACTOR SHALL MOVE R.O. EQUIPMENT FROM STORAGE TO THE PROJECT SITE WHEN READY FOR INSTALLATION.
3. CONTRACTOR SHALL BE RESPONSIBLE FOR SUPPLYING ALL PIPING NOT PROVIDED BY HARN R/O/SYSTEMS TO CONSTRUCT A COMPLETE WORKING R.O. TREATMENT SYSTEM AS SHOWN ON PLANS.

REVISIONS

THE WOOTEN COMPANY
120 North Boylan Avenue Raleigh, NC 27603-1423
919.828.0531 Fax 919.834.3389
License Number: F-0115

BRUNSWICK REGIONAL WATER AND SEWER H2GO
BRUNSWICK COUNTY NORTH CAROLINA
CONTRACT No. 4
REVERSE OSMOSIS WATER TREATMENT PLANT
R.O. TRAINS
PLAN SECTION AND ELEVATIONS

NORTH CAROLINA PROFESSIONAL SEAL 040529 ENGINEER CHRIS W. SCHAUB 7-JUNE-20

NORTH CAROLINA PROFESSIONAL SEAL 22831 ENGINEER CHARLES W. DAVIS 7-JUNE-20

DESIGNED BY:	CWD
DRAWN BY:	PMD/EML
CHECKED BY:	CWD
PROJECT NO.:	3081-AB
DATE:	JUNE 7, 2020
SCALE:	AS NOTED

SHEET 62 OF 181

M106

Default
Print2PDFx.plt
2.6667 " / in.
pdonaghy
6/4/2020 2:07:05 PM
T:\Projects\Brunswick_Regional_W&S_H2GO-3081\AB-Water_Supply&Treatment_Plant\Sheets\WTP\M106-ROTRAINS.dgn

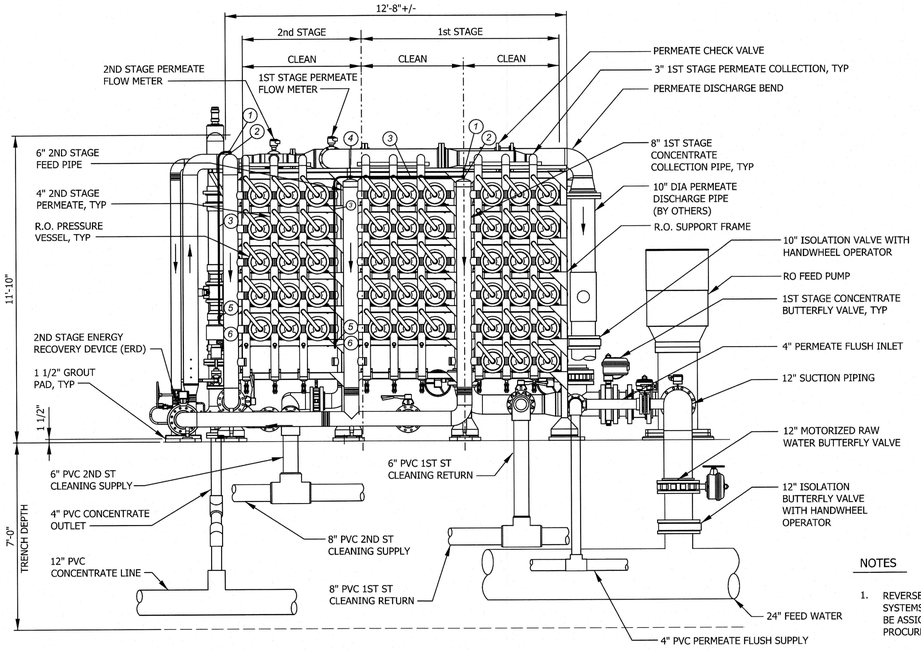

5 M106 R.O. TREATMENT TRAIN - INTERSTAGE END ELEVATION

SCALE: 3/8" = 1'-0"

AIR RELIEF SYSTEM

1. 1/2" 316L SS SWAGELOK TUBE X MALE NPT 90DEG ELL
2. 1/2" 316L SS #3000 HALF COUPLING (TYP)
3. 1/2" 316L SS TUBING
4. 1/2" 316L SS TUBING RUN TEE, 1/2" MALE NPT BRANCH
5. 1/2" 316L SS 300# BALL VALVE
6. 1/2" 316L SS TUBING TO DRAIN

NOTES

1. REVERSE OSMOSIS EQUIPMENT SHOWN IS PROVIDED BY HARN R/O SYSTEMS. THE PROCUREMENT CONTRACT FOR HARN R/O SYSTEMS SHALL BE ASSIGNED TO THIS CONTRACT. SEE PROJECT MANUAL FOR R.O. PROCUREMENT DOCUMENTS INCLUDED AS APPEDIX A.
2. ALL EQUIPMENT PROVIDED BY THE R.O.E.M. CONTRACT SHALL BE INSTALLED BY THE CONTRACTOR UNDER THIS CONTRACT. CONTRACTOR SHALL MOVE R.O. EQUIPMENT FROM STORAGE TO THE PROJECT SITE WHEN READY FOR INSTALLATION.
3. CONTRACTOR SHALL BE RESPONSIBLE FOR SUPPLYING ALL PIPING NOT PROVIDED BY HARN R/O/SYSTEMS TO CONSTRUCT A COMPLETE WORKING R.O. TREATMENT SYSTEM AS SHOWN ON PLANS.

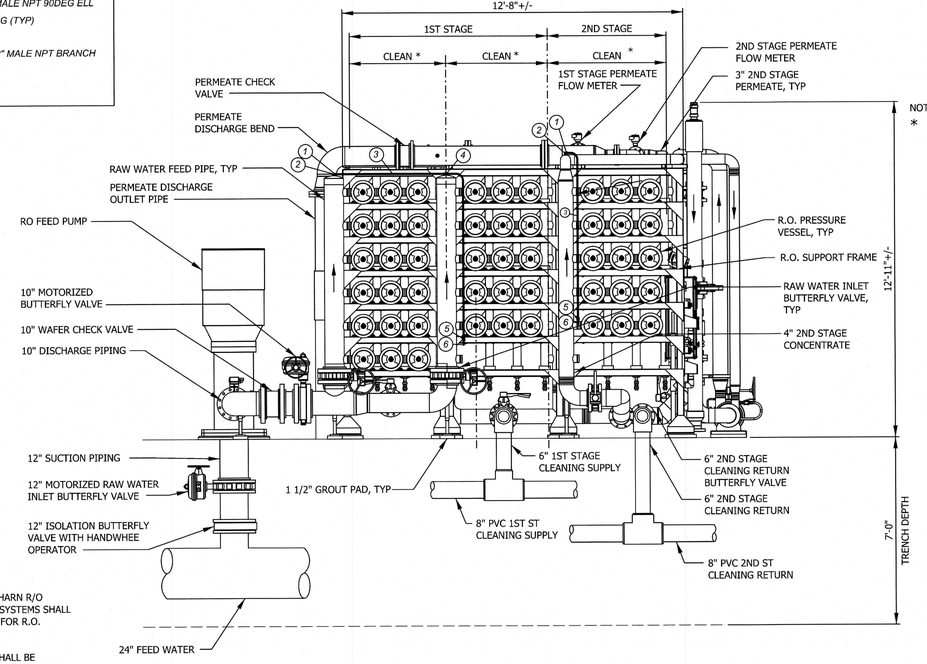

NOTES:
* R.O. TREATMENT TRAIN SHALL BE CLEANED IN SECTIONS PER THE VESSEL GROUPINGS.

6 M106 R.O. TREATMENT TRAIN - FEED END ELEVATION

SCALE: 3/8" = 1'-0"

NO.	QTY.	DESCRIPTION	MANUFACTURER / PART NO./ LABEL
1	1	4" PRESSURE GAUGE 0-60 PSI W/ 3-WAY VALVE	PERMEATE PRESSURE (PI-204)
2	1	LABEL	1st STAGE PERMEATE
3	1	LABEL	2nd STAGE PERMEATE
4	1	4" PRESSURE GAUGE 0-600 PSI W/ 5-WAY VALVE	SYSTEM PRESSURE (PI-205)
5	1	LABEL	1st STAGE FEED
6	1	LABEL	1st STAGE CONCENTRATE
7	1	LABEL	2nd STAGE FEED
8	1	LABEL	2nd STAGE CONCENTRATE
–	–	–	–
–	–	–	–
11	1	1/4" PVC SAMPLE VALVE	1ST STAGE PERMEATE
12	1	1/4" PVC SAMPLE VALVE	2ND STAGE PERMEATE
13	1	1/4" PVC SAMPLE VALVE	TOTAL PERMEATE
14	1	1/4" PVC SAMPLE VALVE	V1-1
15	1	1/4" PVC SAMPLE VALVE	V1-2
16	1	1/4" PVC SAMPLE VALVE	V1-3
17	1	1/4" PVC SAMPLE VALVE	V1-4
18	1	1/4" PVC SAMPLE VALVE	V1-5
19	1	1/4" PVC SAMPLE VALVE	V1-6
20	1	1/4" PVC SAMPLE VALVE	V1-7
21	1	1/4" PVC SAMPLE VALVE	V1-8
22	1	1/4" PVC SAMPLE VALVE	V1-9
23	1	1/4" PVC SAMPLE VALVE	V1-10
24	1	1/4" PVC SAMPLE VALVE	V1-11
25	1	1/4" PVC SAMPLE VALVE	V1-12
26	1	1/4" PVC SAMPLE VALVE	V1-13
27	1	1/4" PVC SAMPLE VALVE	V1-14
28	1	1/4" PVC SAMPLE VALVE	V1-15
29	1	1/4" PVC SAMPLE VALVE	V1-16
30	1	1/4" PVC SAMPLE VALVE	V1-17
31	1	1/4" PVC SAMPLE VALVE	V1-18
32	1	1/4" PVC SAMPLE VALVE	V1-19
33	1	1/4" PVC SAMPLE VALVE	V1-20
34	1	1/4" PVC SAMPLE VALVE	V1-21
35	1	1/4" PVC SAMPLE VALVE	V1-22
36	1	1/4" PVC SAMPLE VALVE	V1-23
37	1	1/4" PVC SAMPLE VALVE	V1-24
38	1	1/4" PVC SAMPLE VALVE	V1-25
39	1	1/4" PVC SAMPLE VALVE	V1-26
40	1	1/4" PVC SAMPLE VALVE	V1-27
41	1	1/4" PVC SAMPLE VALVE	V1-28
42	1	1/4" PVC SAMPLE VALVE	V1-29
43	1	1/4" PVC SAMPLE VALVE	V1-30
44	1	1/4" PVC SAMPLE VALVE	V1-31
45	1	1/4" PVC SAMPLE VALVE	V1-32
46	1	1/4" PVC SAMPLE VALVE	V1-33
47	1	1/4" PVC SAMPLE VALVE	SPARE
48	1	1/4" PVC SAMPLE VALVE	SPARE
49	1	1/4" PVC SAMPLE VALVE	SPARE
50	1	1/4" PVC SAMPLE VALVE	V2-1
51	1	1/4" PVC SAMPLE VALVE	V2-2
52	1	1/4" PVC SAMPLE VALVE	V2-3
53	1	1/4" PVC SAMPLE VALVE	V2-4
54	1	1/4" PVC SAMPLE VALVE	V2-5
55	1	1/4" PVC SAMPLE VALVE	V2-6
56	1	1/4" PVC SAMPLE VALVE	V2-7
57	1	1/4" PVC SAMPLE VALVE	V2-8
58	1	1/4" PVC SAMPLE VALVE	V2-9
59	1	1/4" PVC SAMPLE VALVE	V2-10
60	1	1/4" PVC SAMPLE VALVE	V2-11
61	1	1/4" PVC SAMPLE VALVE	V2-12
62	1	1/4" PVC SAMPLE VALVE	V2-13
63	1	1/4" PVC SAMPLE VALVE	V2-14
64	1	1/4" PVC SAMPLE VALVE	V2-15
65	1	1/4" PVC SAMPLE VALVE	SPARE
66	1	1/4" PVC SAMPLE VALVE	SPARE
67	1	1/4" PVC SAMPLE VALVE	SPARE
68	1	1/4" SS SAMPLE VALVE	FEED
69	1	1/4" SS SAMPLE VALVE	INTERSTAGE
70	1	1/4" SS SAMPLE VALVE	CONCENTRATE
71	1	LABEL	1ST STAGE FEED PRESSURE (PIT/PE-205)
72	1	LABEL	1ST STAGE CONCENTRATE PRESSURE (PIT/PE-209)
73	1	LABEL	2ND STAGE FEED PRESSURE (PIT/PE-210)
74	1	LABEL	2nd STAGE CONCENTRATE PRESSURE (PIT/PE-212)
75	1	LABEL	TURBO EXHAUST PRESSURE (PIT/PE-214)
76	1	LABEL	1st STAGE PERMEATE FLOW (FIT/FE-208)
77	1	LABEL	2nd STAGE PERMEATE FLOW (FIT/FE-211)
78	1	LABEL	TOTAL CONCENTRATE FLOW (FIT/FE-217)
79	1	LABEL	TOTAL PERMEATE CONDUCTIVITY (AIT/AE-215)
80	1	LABEL	TOTAL CONCENTRATE CONDUCTIVITY (AIT/AE-216)
81	1	LABEL	E-STOP

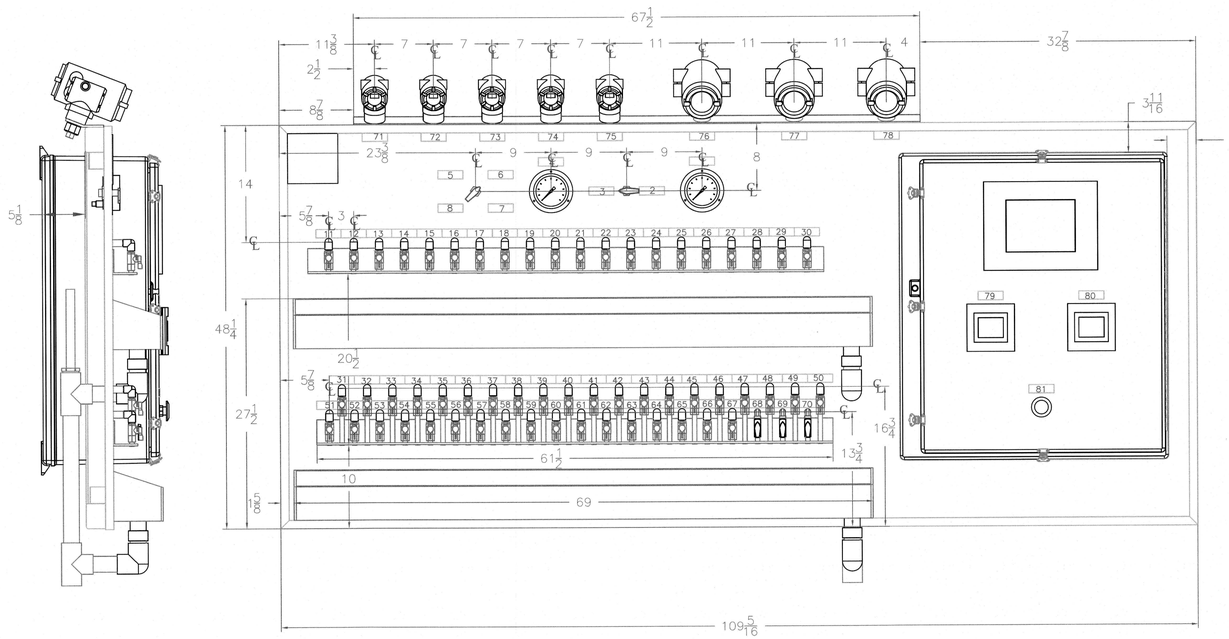

7 M107 R.O. TRAIN SAMPLE AND INSTRUMENTATION PANEL

NO SCALE

3/8"=1'-0"

12" 0 1' 2' 4'

REVISIONS

THE WOOTEN COMPANY
120 North Boylan Avenue Raleigh, NC 27603-1423
919.828.0531 fax 919.834.3589
License Number: F-0115

BRUNSWICK REGIONAL WATER AND SEWER H2GO
BRUNSWICK COUNTY NORTH CAROLINA
CONTRACT No. 4
REVERSE OSMOSIS WATER TREATMENT PLANT
R.O.TRAINS
TRAIN ELEVATIONS

NORTH CAROLINA PROFESSIONAL SEAL 040525 ENGINEER CARL W. SCHAFER
7-JUNE-20

NORTH CAROLINA PROFESSIONAL SEAL 22631 ENGINEER CHARLES W. DAVIS
7-JUNE-20

DESIGNED BY: CWD
DRAWN BY: PMD/EML
CHECKED BY: CWD
PROJECT NO.: 3081-AB
DATE: JUNE 7, 2020
SCALE: AS NOTED

SHEET 63 OF 181

M107

Default

Print2PDFx.plt
2.6667 " / in.
pdonaghy
6/4/2020 2:18:42 PM
T:\Projects\Brunswick_Regional_W&S_H2GO-3081\AB-Water_Supply&Treatment_Plant\Sheets\WTP\M107-RO_TRAINS.dgn

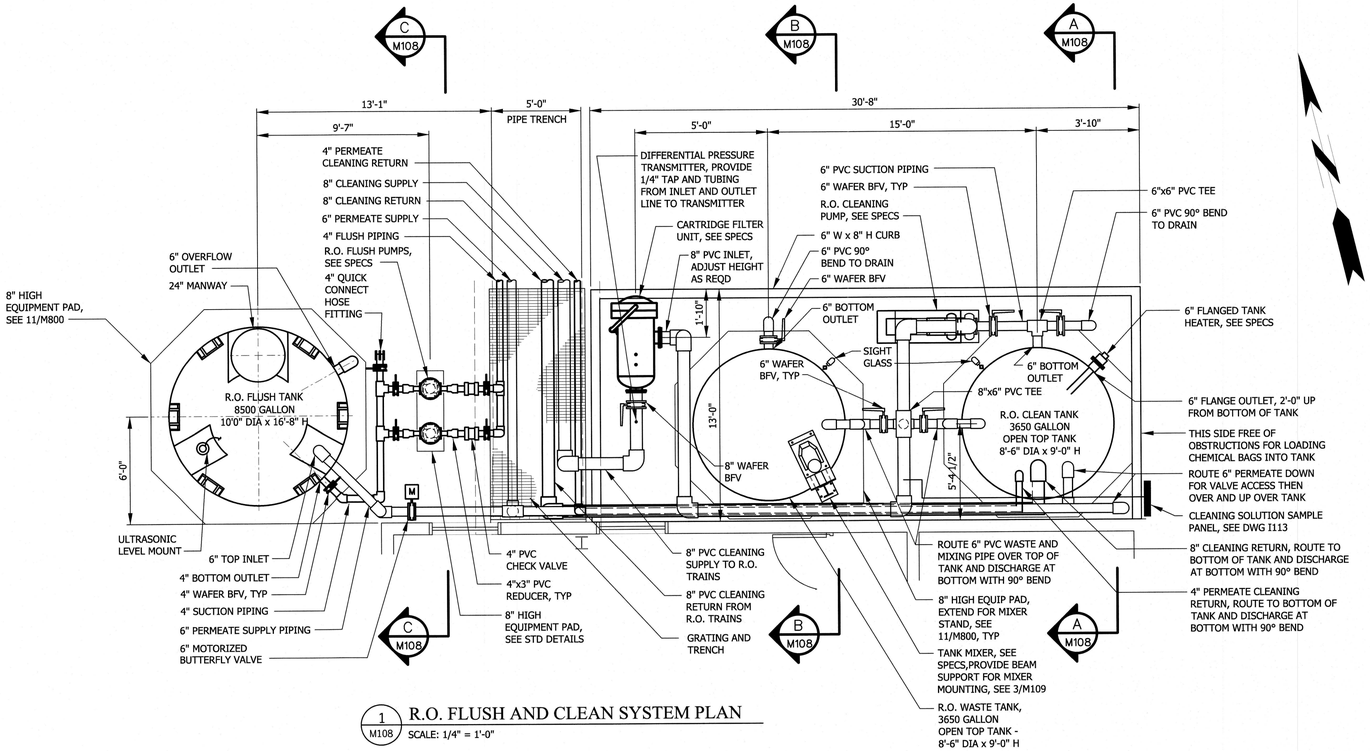

1 M108 R.O. FLUSH AND CLEAN SYSTEM PLAN
SCALE: 1/4" = 1'-0"

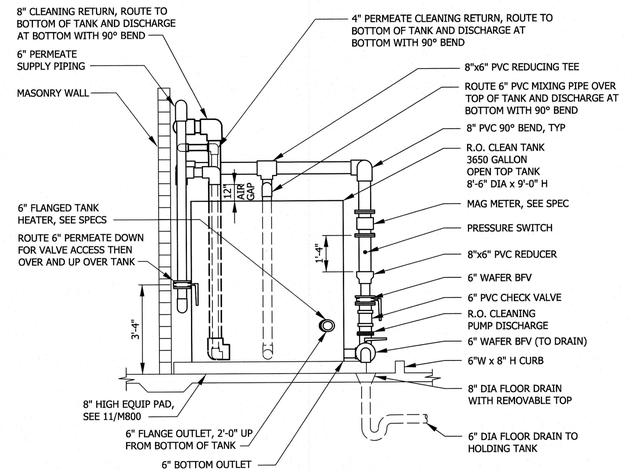

A M108 SECTION - CLEANING TANK
SCALE: 1/4" = 1'-0"

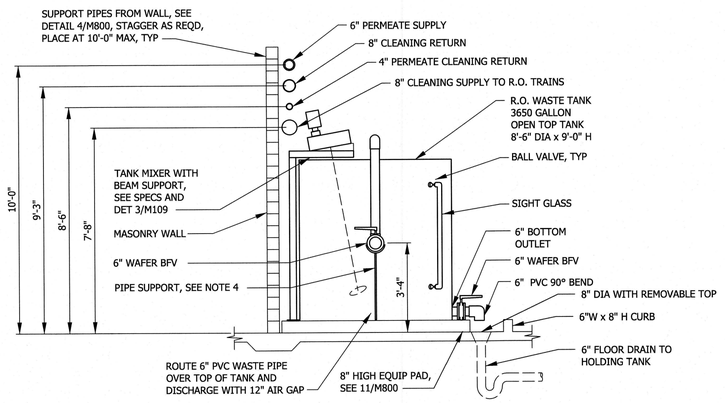

B M108 SECTION - WASTE TANK
SCALE: 1/4" = 1'-0"

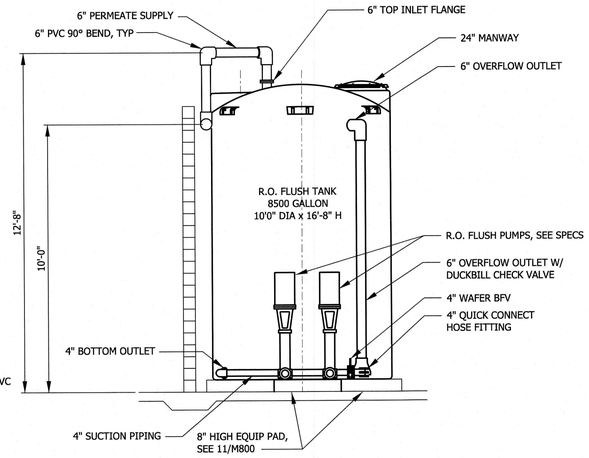

C M108 SECTION - PERMEATE TANK
SCALE: 1/4" = 1'-0"

1/4"=1'-0" 2' 1' 0 1' 2' 6'

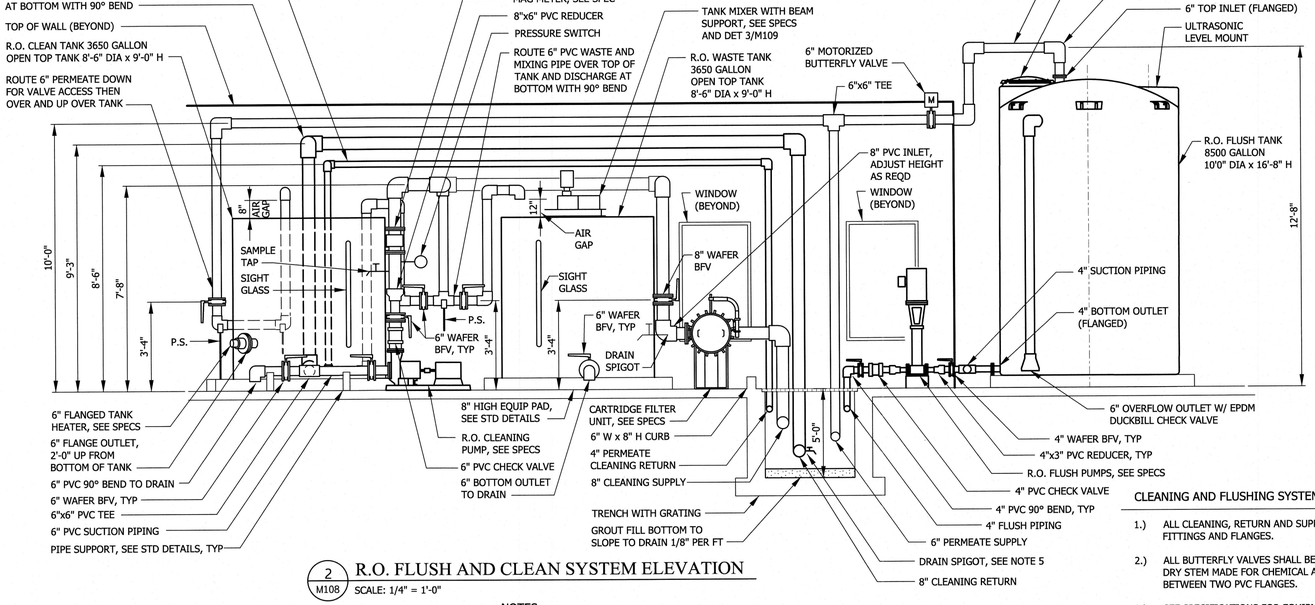

2 M108 R.O. FLUSH AND CLEAN SYSTEM ELEVATION
SCALE: 1/4" = 1'-0"

NOTES

1. REVERSE OSMOSIS EQUIPMENT SHOWN IS PROVIDED BY HARN R/O SYSTEMS. THE PROCUREMENT CONTRACT FOR HARN R/O SYSTEMS SHALL BE ASSIGNED TO THIS CONTRACT. SEE PROJECT MANUAL FOR R.O. PROCUREMENT DOCUMENTS INCLUDED AS APPENDIX A.
2. ALL EQUIPMENT PROVIDED BY THE R.O.E.M. CONTRACT SHALL BE INSTALLED BY THE CONTRACTOR UNDER THIS CONTRACT. CONTRACTOR SHALL MOVE R.O. EQUIPMENT FROM STORAGE TO THE PROJECT SITE WHEN READY FOR INSTALLATION.

CLEANING AND FLUSHING SYSTEM NOTES

1.) ALL CLEANING, RETURN AND SUPPLY LINES SHALL BE SCHEDULE 80 PVC WITH PVC FITTINGS AND FLANGES.
2.) ALL BUTTERFLY VALVES SHALL BE THERMOPLASTIC WAFER STYLE VALVES WITH DRY STEM MADE FOR CHEMICAL AND CORROSION RESISTANCE. MOUNT VALVES BETWEEN TWO PVC FLANGES.
3.) SEE SPECIFICATIONS FOR EQUIPMENT PROVIDED BY THE REVERSE OSMOSIS EQUIPMENT MANUFACTURER (R.O.E.M.) TO BE INSTALLED BY CONTRACTOR. ALL EQUIPMENT NOT LISTED SHALL BE SUPPLIED AND INSTALLED BY CONTRACTOR.
4.) NOT ALL PIPE SUPPORTS SHOWN FOR CLARITY. CONTRACTOR SHALL SUPPORT PIPE AS REQUIRED OR DIRECTED BY ENGINEER. CONTRACTOR HAS OPTION TO USE CHOOSE TYPE OF SUPPORT AS SHOWN ON M800 FOR PIPE AT DIFFERENT ELEVATIONS AND LOCATIONS.
5.) PROVIDE DRAIN SPIGOT WHERE SHOWN AND ON LOW POINT IN TRENCH OF ALL CLEANING AND FLUSHING PIPING. DRAIN SPIGOT SHALL BE 1/2" S.S. TUBING WITH 1/2" S.S. GLOBE TYPE VALVE.

REVISIONS

THE WOOTEN COMPANY
120 North Boylan Avenue Raleigh, NC 27603-1423
919.828.0531 fax 919.834.3589
License Number: F-0115

BRUNSWICK REGIONAL WATER AND SEWER H2GO
BRUNSWICK COUNTY NORTH CAROLINA
CONTRACT No. 4
REVERSE OSMOSIS WATER TREATMENT PLANT
R.O. TRAIN FLUSH AND CLEANING SYSTEM PLAN AND ELEVATION

NORTH CAROLINA PROFESSIONAL ENGINEER SEAL 040525 CHARLES W. SCHARRER 7-June-20

NORTH CAROLINA PROFESSIONAL ENGINEER SEAL 22531 CHARLES W. DAVIS 7-JUNE-20

DESIGNED BY: CWD
DRAWN BY: PMD/EML
CHECKED BY: CWD
PROJECT NO.: 3081-AB
DATE: JUNE 7, 2020
SCALE: AS NOTED

SHEET 64 OF 181

M108

Default
Print2PDFx.plt
4.0000 " / in.
pdonaghy
6/4/2020 2:42:10 PM
T:\Projects\Brunswick_Regional_W&S_H2GO-3081\AB-Water_Supply&Treatment_Plant\Sheets\WTP\M108-RO_CLEANING.dgn

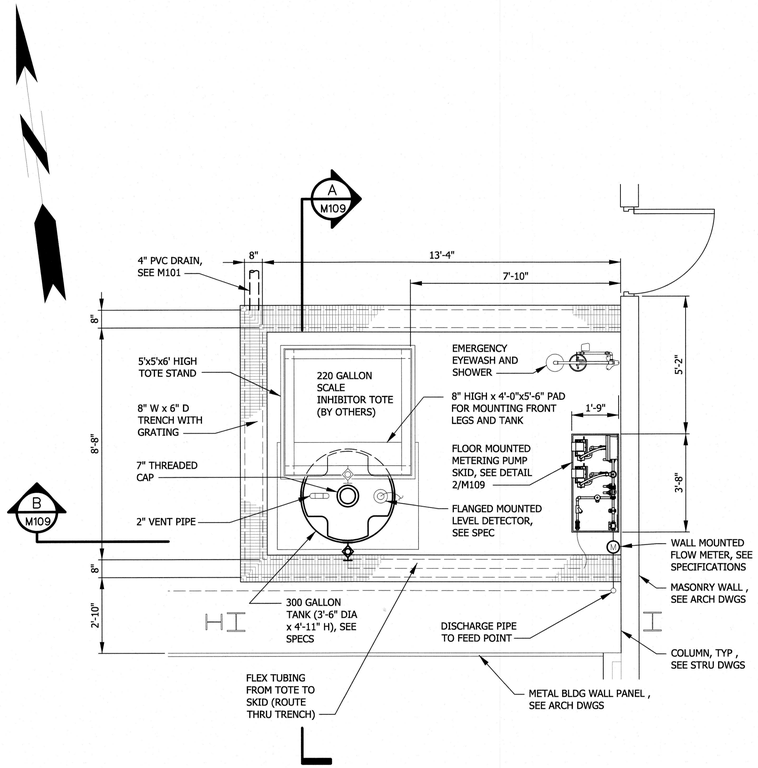

1 M101 SCALE INHIBITOR SYSTEM PLAN
SCALE: 3/8" = 1'-0"

TOTE STAND LAYOUT SHOWN AS TYPICAL FOR SHAPES AND CONNECTIONS. CONTRACTOR SHALL WORK WITH TOTE SUPPLIER AND SUBMIT SHOP DRAWINGS WITH DETAILED CONNECTIONS AND STRUCTURAL CALCULATION SEALED BY REGISTERED NORTH CAROLINA STRUCTURAL ENGINEER FOR TOTE STAND.

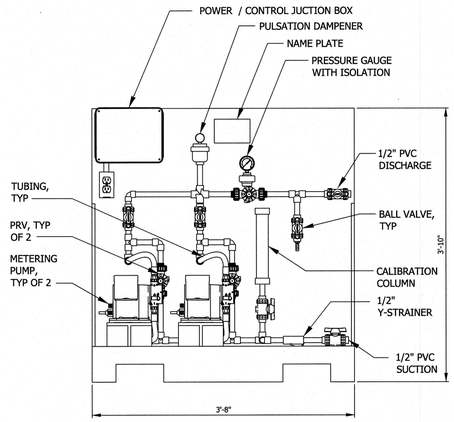

2 M109 SCALE INHIBITOR PUMP SKID
SCALE: 1/2" = 1'-0"

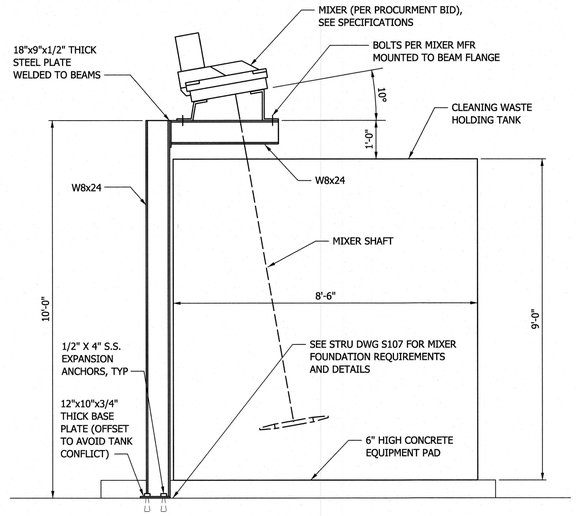

MIXER LAYOUT SHOWN AS TYPICAL FOR SHAPES AND CONNECTIONS. CONTRACTOR SHALL WORK WITH MIXER MANUFACTURER AND SUBMIT SHOP DRAWINGS WITH DETAILED CONNECTIONS AND STRUCTURAL CALCULATION SEALED BY REGISTERED NORTH CAROLINA STRUCTURAL ENGINEER FOR MIXER SUPPORT.

C M108 SECTION - TANK MIXER
SCALE: 1/2" = 1'-0"

NOTES

1. REVERSE OSMOSIS EQUIPMENT SHOWN IS PROVIDED BY HARN R/O SYSTEMS. THE PROCUREMENT CONTRACT FOR HARN R/O SYSTEMS SHALL BE ASSIGNED TO THIS CONTRACT. SEE PROJECT MANUAL FOR R.O. PROCUREMENT DOCUMENTS INCLUDED AS APPENDIX A.
2. ALL EQUIPMENT PROVIDED BY THE R.O.E.M. CONTRACT SHALL BE INSTALLED BY THE CONTRACTOR UNDER THIS CONTRACT. CONTRACTOR SHALL MOVE R.O. EQUIPMENT FROM STORAGE TO THE PROJECT SITE WHEN READY FOR INSTALLATION.

REVISIONS

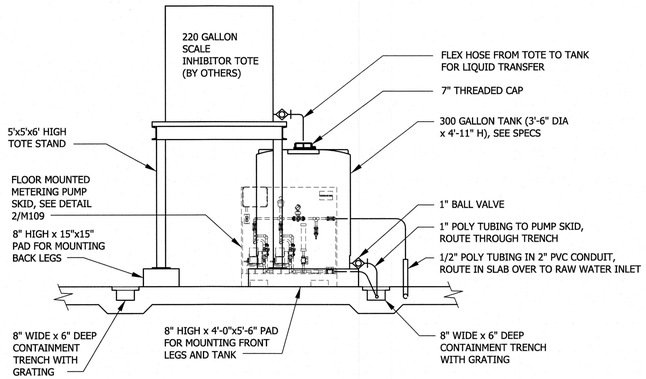

A M109 SCALE INHIBITOR SECTION
SCALE: 3/8" = 1'-0"

TOTE STAND LAYOUT SHOWN AS TYPICAL FOR SHAPES AND CONNECTIONS. CONTRACTOR SHALL WORK WITH TOTE SUPPLIER AND SUBMIT SHOP DRAWINGS WITH DETAILED CONNECTIONS AND STRUCTURAL CALCULATION SEALED BY REGISTERED NORTH CAROLINA STRUCTURAL ENGINEER FOR TOTE STAND.

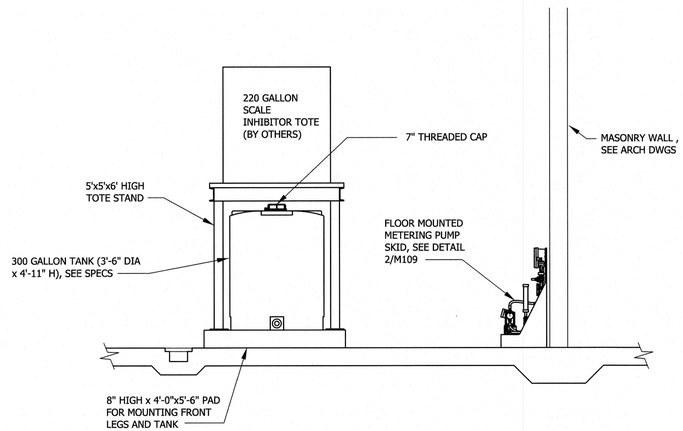

B M109 SCALE INHIBITOR SECTION
SCALE: 3/8" = 1'-0"

TOTE STAND LAYOUT SHOWN AS TYPICAL FOR SHAPES AND CONNECTIONS. CONTRACTOR SHALL WORK WITH TOTE SUPPLIER AND SUBMIT SHOP DRAWINGS WITH DETAILED CONNECTIONS AND STRUCTURAL CALCULATION SEALED BY REGISTERED NORTH CAROLINA STRUCTURAL ENGINEER FOR TOTE STAND.

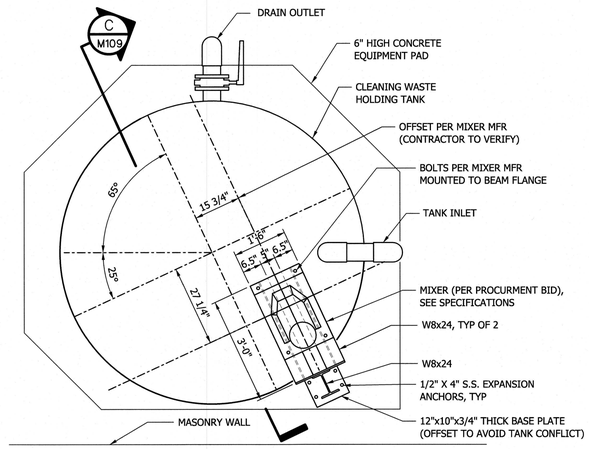

MIXER LAYOUT SHOWN AS TYPICAL FOR SHAPES AND CONNECTIONS. CONTRACTOR SHALL WORK WITH MIXER MANUFACTURER AND SUBMIT SHOP DRAWINGS WITH DETAILED CONNECTIONS AND STRUCTURAL CALCULATION SEALED BY REGISTERED NORTH CAROLINA STRUCTURAL ENGINEER FOR MIXER SUPPORT.

3 M108 DETAIL - TANK MIXER
SCALE: 1/2" = 1'-0"

1/2"=1'-0" 12" 0 1' 3"
3/8"=1'-0" 12" 0 1' 2' 4"

THE WOOTEN COMPANY
120 North Boylan Avenue Raleigh NC 27603-1423
919.828.0531 Fax 919.834.3589
License Number: F-0115

BRUNSWICK REGIONAL WATER AND SEWER H2GO
BRUNSWICK COUNTY NORTH CAROLINA
CONTRACT No. 4
REVERSE OSMOSIS WATER TREATMENT PLANT
SCALE INHIBITOR SYSTEM
PLAN AND ELEVATION

NORTH CAROLINA PROFESSIONAL ENGINEER SEAL 040826 CHARLES W. SCHAFER 7 June 20

NORTH CAROLINA PROFESSIONAL ENGINEER SEAL 22531 CHARLES W. DAVIS 7 June 20

DESIGNED BY: CWD
DRAWN BY: PMD/EML
CHECKED BY: CWD
PROJECT NO.: 3081-AB
DATE: JUNE 7, 2020
SCALE: AS NOTED

SHEET 65 OF 181

M109

Default
Print2PDFx.plt
2.6667 " / in.
pdonaghy
6/4/2020 2:45:06 PM
T:\Projects\Brunswick_Regional_W&S_H2GO-3081\AB-Water_Supply&Treatment_Plant\Sheets\WTP\M109-SCALE INHIBITOR.dgn

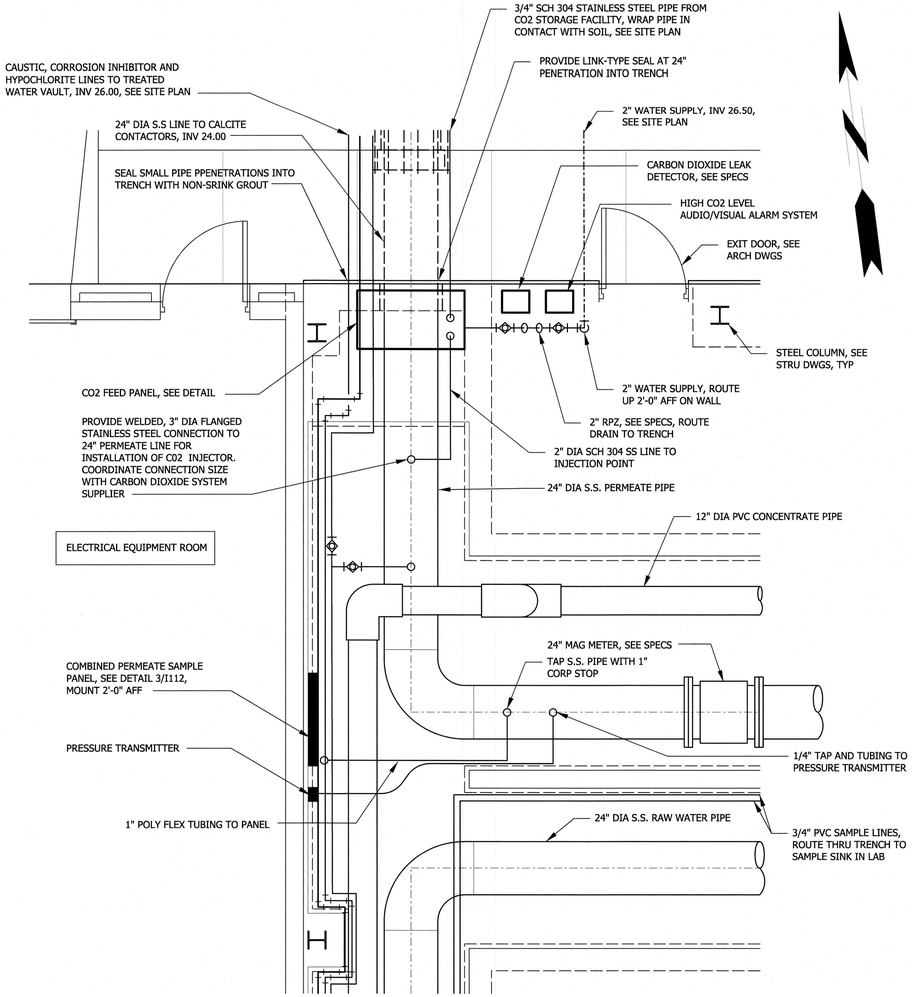

1 M101 CO2 FEED PANEL PLAN
SCALE: 3/8" = 1'-0"

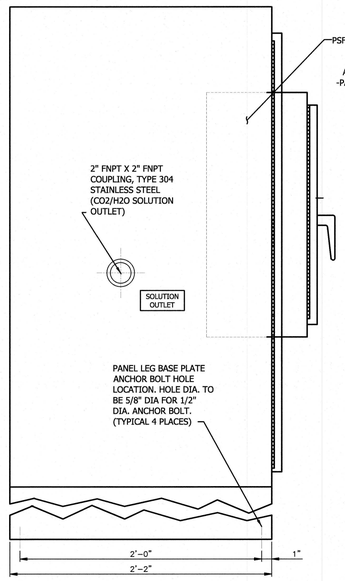

LEFT SIDE VIEW

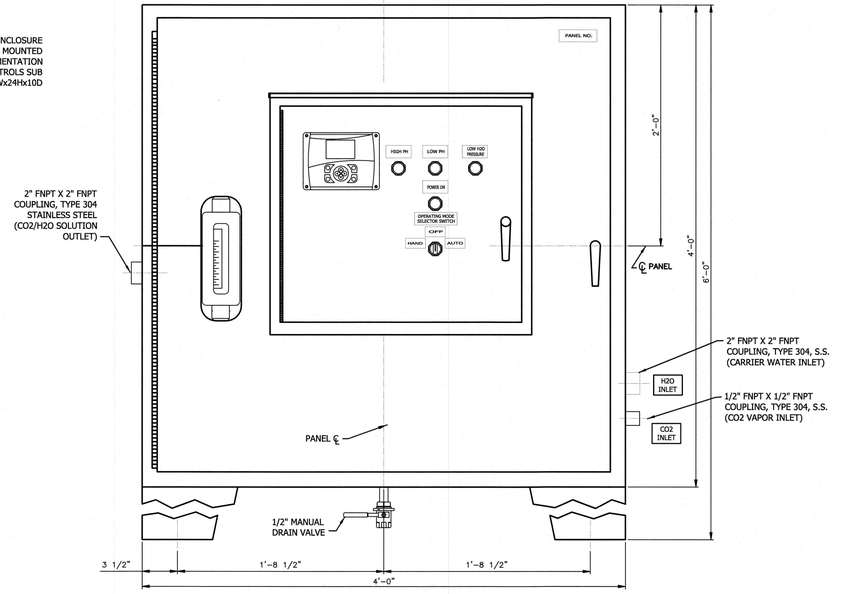

CO2/H2O PRESSURE SOLUTION FEED PANEL PSF
STAINLESS STEEL ENCLOSURE
(1 REQUIRED)

2 M110 CO2 FEED PANEL
NO SCALE

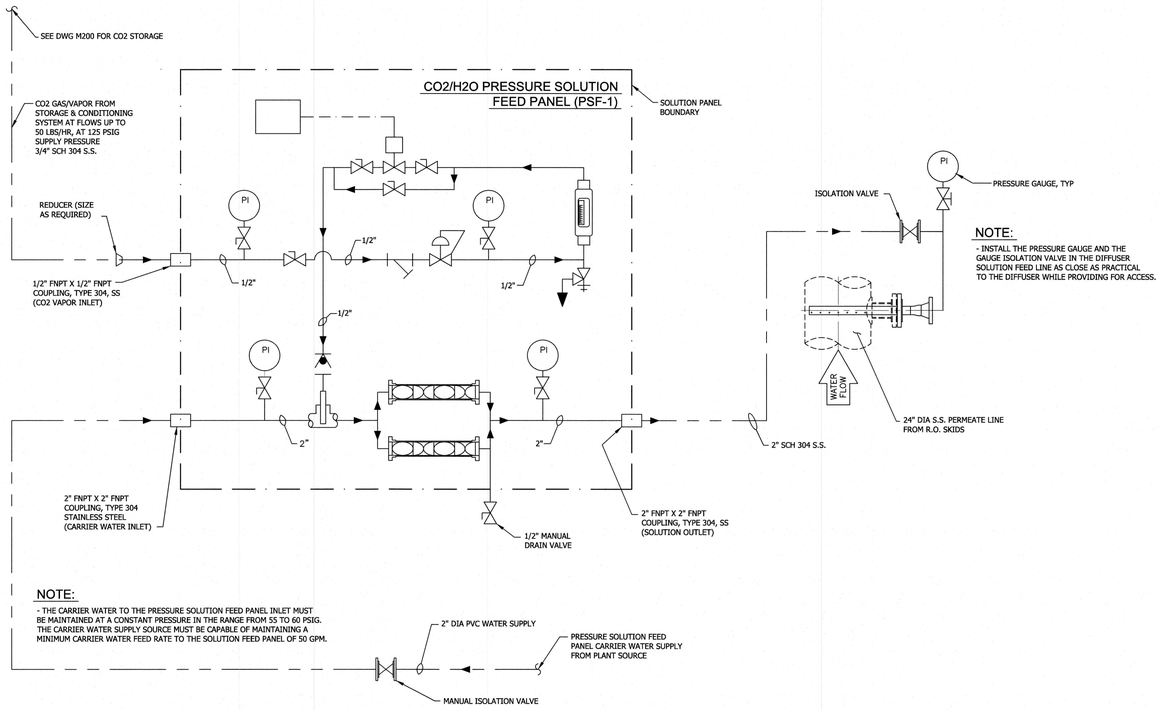

3 M110 CO2 FEED PANEL SCHEMATIC
NO SCALE

REVISIONS

THE WOOTEN COMPANY
120 North Boylan Avenue Raleigh, NC 27603-1423
919.828.0531 Fax 919.834.3589
License Number: F-0115

BRUNSWICK REGIONAL WATER AND SEWER H2GO
BRUNSWICK COUNTY NORTH CAROLINA
CONTRACT No. 4
REVERSE OSMOSIS WATER TREATMENT PLANT
CO2 FEED PANEL
PLAN AND DETAILS

NORTH CAROLINA PROFESSIONAL SEAL 040525 ENGINEER CHARLES W. SCHMIDT
7-June-20

NORTH CAROLINA PROFESSIONAL SEAL 22531 ENGINEER CHARLES W. DAVIS
7-June-20

DESIGNED BY: CWD
DRAWN BY: PMD/EML
CHECKED BY: CWD
PROJECT NO.: 3081-AB
DATE: JUNE 7, 2020
SCALE: AS NOTED

SHEET 66 OF 181

M110

Default
Print2PDFx.plt
2.6667 ' / in.
pdonaghy
6/4/2020 5:03:24 PM
T:\Projects\Brunswick_Regional_W&S_H2CO-3081\AB-Water_Supply&Treatment_Plant\Sheets\WTP\M110-RO- CO2 FEED PANEL.dgn

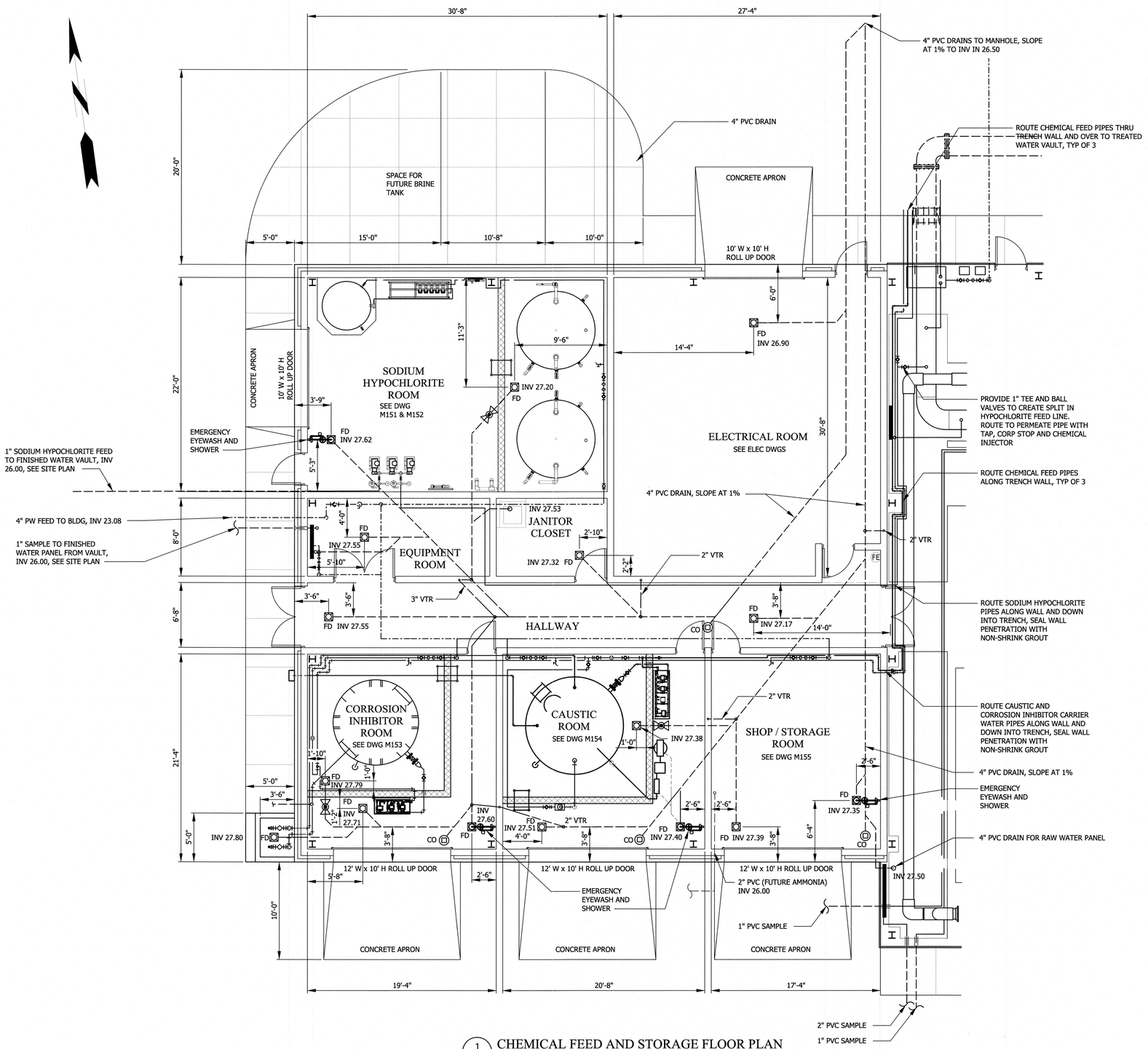

1 M100 CHEMICAL FEED AND STORAGE FLOOR PLAN
SCALE: 3/16" = 1'-0"

NOTES

1. SEE DRAWING P110 FOR HOT AND COLD WATER SUPPLY TO EMERGENCY EYEWASH AND SHOWERS.

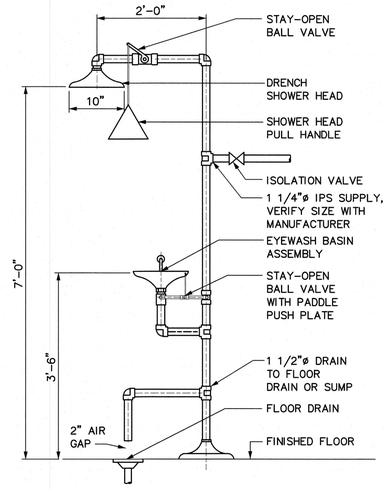

2 M150 EMERGENCY EYEWASH AND SHOWER
NO SCALE — INDOOR USE ONLY

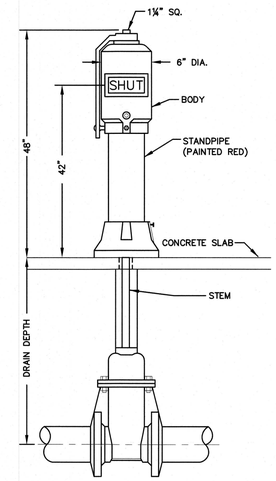

3 M150 DETAIL - POST INDICATOR VALVE
NO SCALE

REVISIONS

THE WOOTEN COMPANY
120 North Boylan Avenue Raleigh, NC 27603-1423
919.828.0531 Fax 919.834.3589
License Number: F-0115

BRUNSWICK REGIONAL WATER AND SEWER H2GO
BRUNSWICK COUNTY NORTH CAROLINA
CONTRACT No. 4
REVERSE OSMOSIS WATER TREATMENT PLANT
CHEMICAL FEED BUILDING FLOOR PLAN

NORTH CAROLINA PROFESSIONAL SEAL 040528 ENGINEER CARLTON W. SCHAFFER
7-June-20

NORTH CAROLINA PROFESSIONAL SEAL 22551 ENGINEER CHARLES W. DAVIS
7-June-20

DESIGNED BY: CWD
DRAWN BY: PMD/EML
CHECKED BY: CWD
PROJECT NO.: 3081-AB
DATE: JUNE 7, 2020
SCALE: AS NOTED

SHEET 67 OF 181

M150

Default
Print2PDFx.plt
5.3333 ' / in.
pdonaghy
6/4/2020 3:50:57 PM
T:\Projects\Brunswick_Regional_W&S_H2GO-3081\AB-Water_Supply&Treatment_Plant\Sheets\WTP\M150-CHEMICAL FLOOR PLAN.dgn

Default

NOTES:

1. SODIUM HYPOCHLORITE GENERATION SYSTEM SHALL BE PROVIDED BY SINGLE MANUFACTURER AND SUPPLIED AS A COMPLETE SYSTEM, SEE SPECS.
2. SEE DWG I104 FOR P&ID DRAWING OF SYSTEM.
3. SEE DWG M150 FOR FLOOR DRAIN INVERTS.

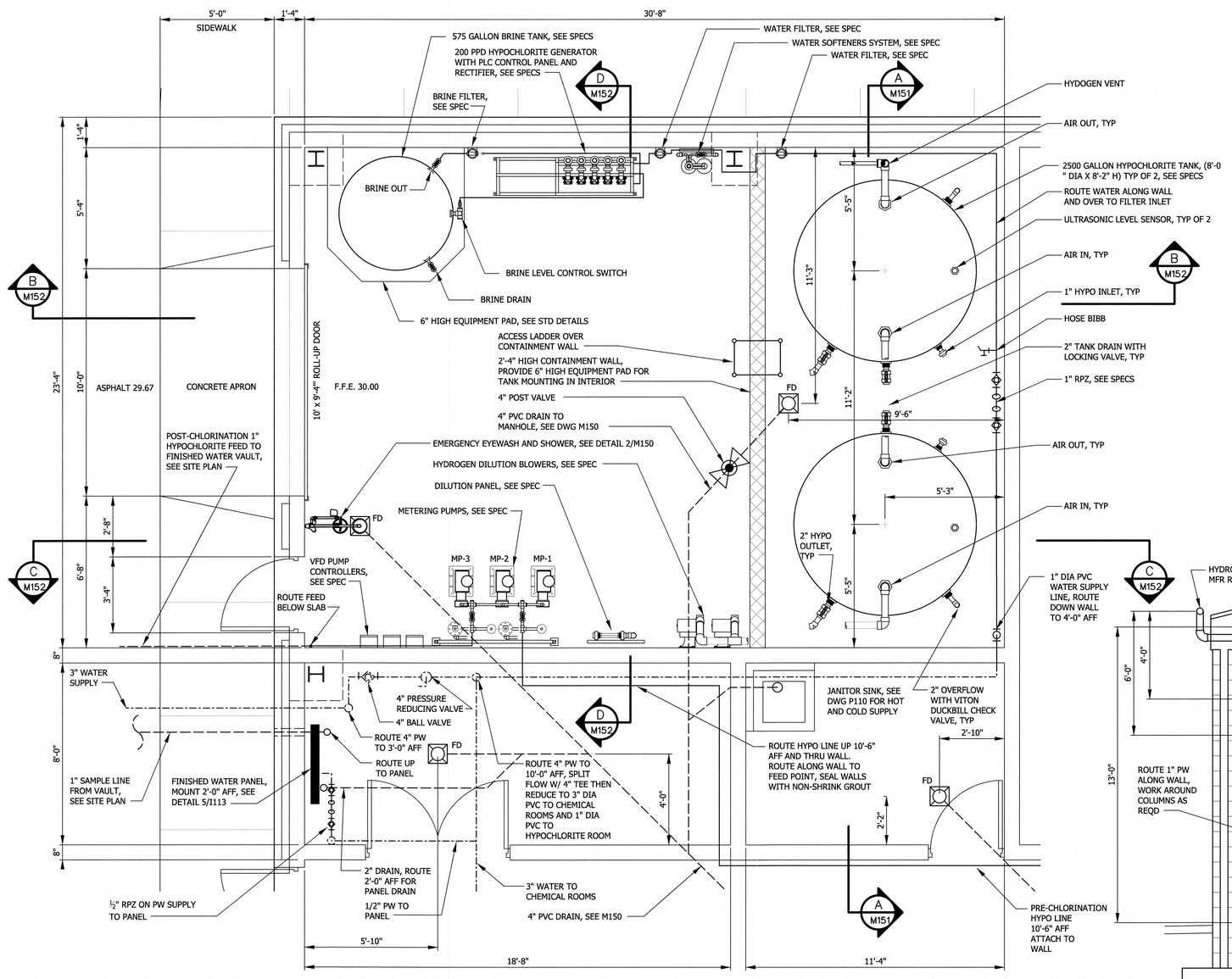

1 M150 HYPOCHLORITE ROOM PLAN
SCALE: 3/8" = 1'-0"

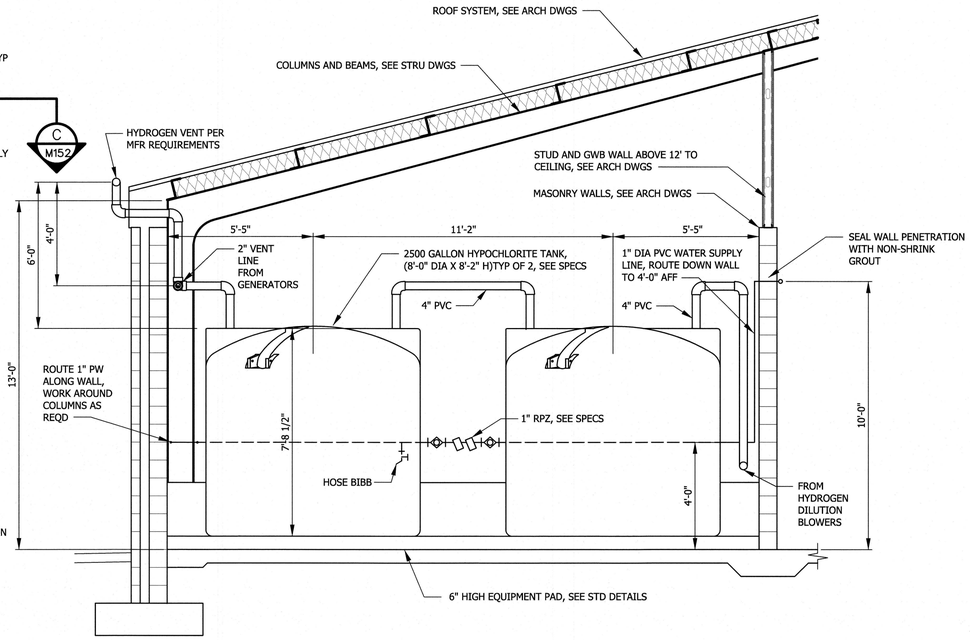

A M151 HYPOCHLORITE ROOM SECTION
SCALE: 3/8" = 1'-0"

3/8"=1'-0"

12" 0 1' 2' 4'

REVISIONS

THE WOOTEN COMPANY
120 North Boylan Avenue Raleigh NC 27603-1423
919.828.0531 fax 919.834.3389
License Number: F-0115

BRUNSWICK REGIONAL WATER AND SEWER H2GO
BRUNSWICK COUNTY NORTH CAROLINA
CONTRACT No. 4
REVERSE OSMOSIS WATER TREATMENT PLANT
HYPOCHLORITE ROOM
FLOOR PLAN AND SECTION

NORTH CAROLINA PROFESSIONAL SEAL 040525 ENGINEER CARL W. SCHMIDT
7-June-20

NORTH CAROLINA PROFESSIONAL SEAL 22631 ENGINEER CHARLES W. DAVIS
7-JUNE-20

DESIGNED BY: CWD
DRAWN BY: PMD/EML
CHECKED BY: CWD
PROJECT NO.: 3081-AB
DATE: JUNE 7, 2020
SCALE: AS NOTED

SHEET 68 OF 181

M151

Print2PDFx.plt
2.667 " / in.
pdonaghy
6/4/2020 4:00:42 PM
T:\Projects\Brunswick_Regional_W&S_H2GO-3081\AB-Water_Supply&Treatment_Plant\Sheets\WTP\M151-HYPOCHLORITE.dgn

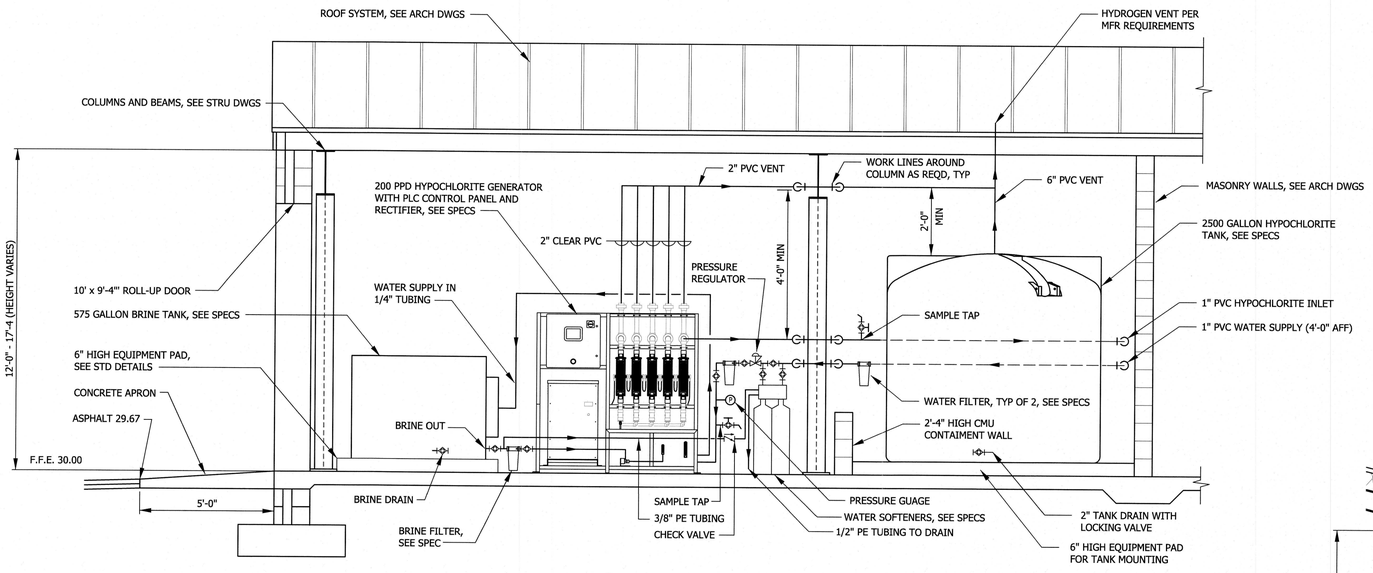

B M151 HYPOCHLORITE ROOM SECTION
SCALE: 3/8" = 1'-0"

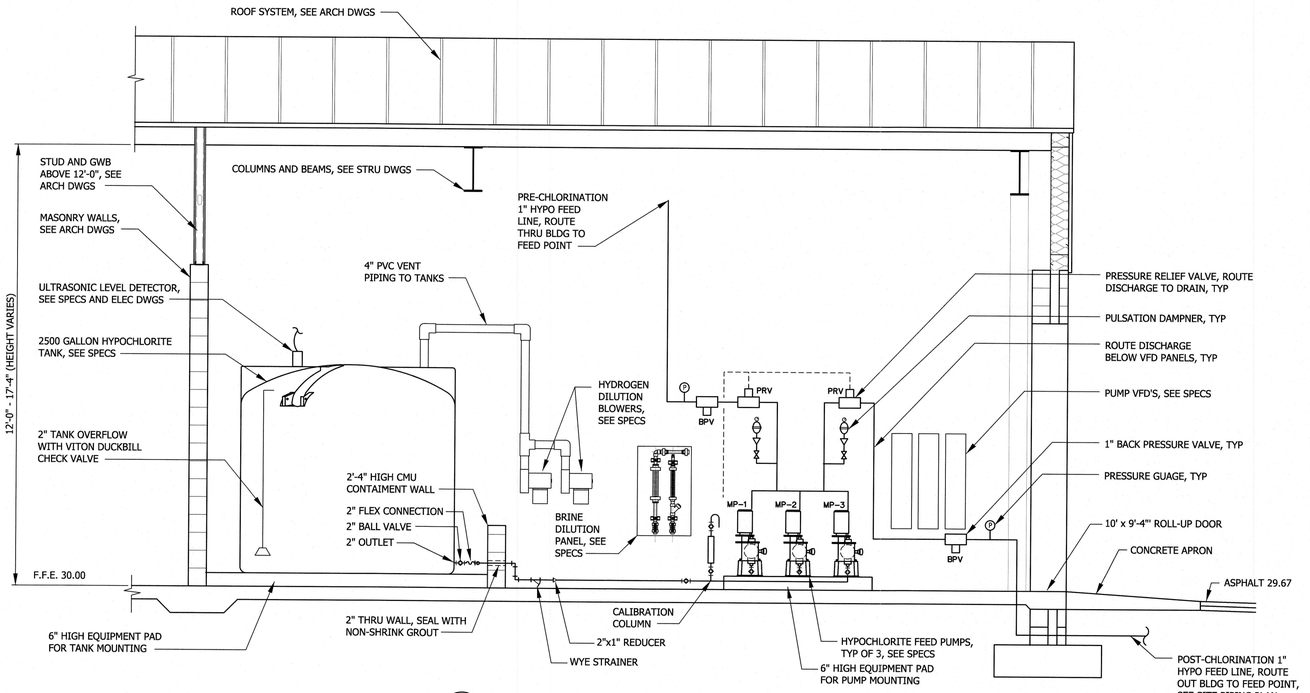

C M151 HYPOCHLORITE ROOM SECTION
SCALE: 3/8" = 1'-0"

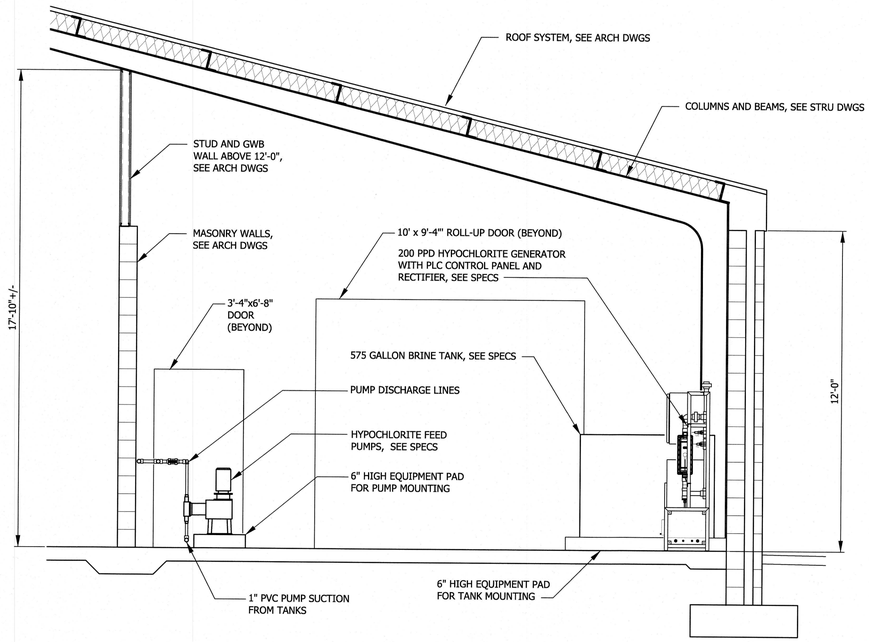

D M151 HYPOCHLORITE ROOM SECTION
SCALE: 3/8" = 1'-0"

3/8"=1'-0"

NOTES:

1. SODIUM HYPOCHLORITE GENERATION SYSTEM SHALL BE PROVIDED BY SINGLE MANUFACTURER AND SUPPLIED AS A COMPLETE SYSTEM, SEE SPECS.
2. SEE DWG I104 FOR P&ID DRAWING OF SYSTEM.
3. SEE DWG M150 FOR FLOOR DRAIN INVERTS.

REVISIONS

THE WOOTEN COMPANY
120 North Boylan Avenue Raleigh NC 27603-1423
919.828.0531 fax 919.834.3589
License Number: F-0115

BRUNSWICK REGIONAL WATER AND SEWER H2GO
BRUNSWICK COUNTY NORTH CAROLINA
CONTRACT No. 4
REVERSE OSMOSIS WATER TREATMENT PLANT
HYPOCHLORITE ROOM SECTIONS AND DETAILS

NORTH CAROLINA PROFESSIONAL SEAL 040529 ENGINEER CHARLES W. SCHRECK
7-JUNE-20

NORTH CAROLINA PROFESSIONAL SEAL 25311 ENGINEER CHARLES W. DAVIS
7-JUNE-20

DESIGNED BY: CWD
DRAWN BY: PMD/EML
CHECKED BY: CWD
PROJECT NO.: 3081-AB
DATE: JUNE 7, 2020
SCALE: AS NOTED

SHEET 69 OF 181

M152

Default

Print2PDFx.plt
2.6667 " / in.
pdonaghy
6/4/2020 4:23:22 PM
T:\Projects\Brunswick_Regional_W&S_H2GO-3081\AB-Water_Supply&Treatment_Plant\Sheets\WTP\M152-HYPOCHLORITE.dgn

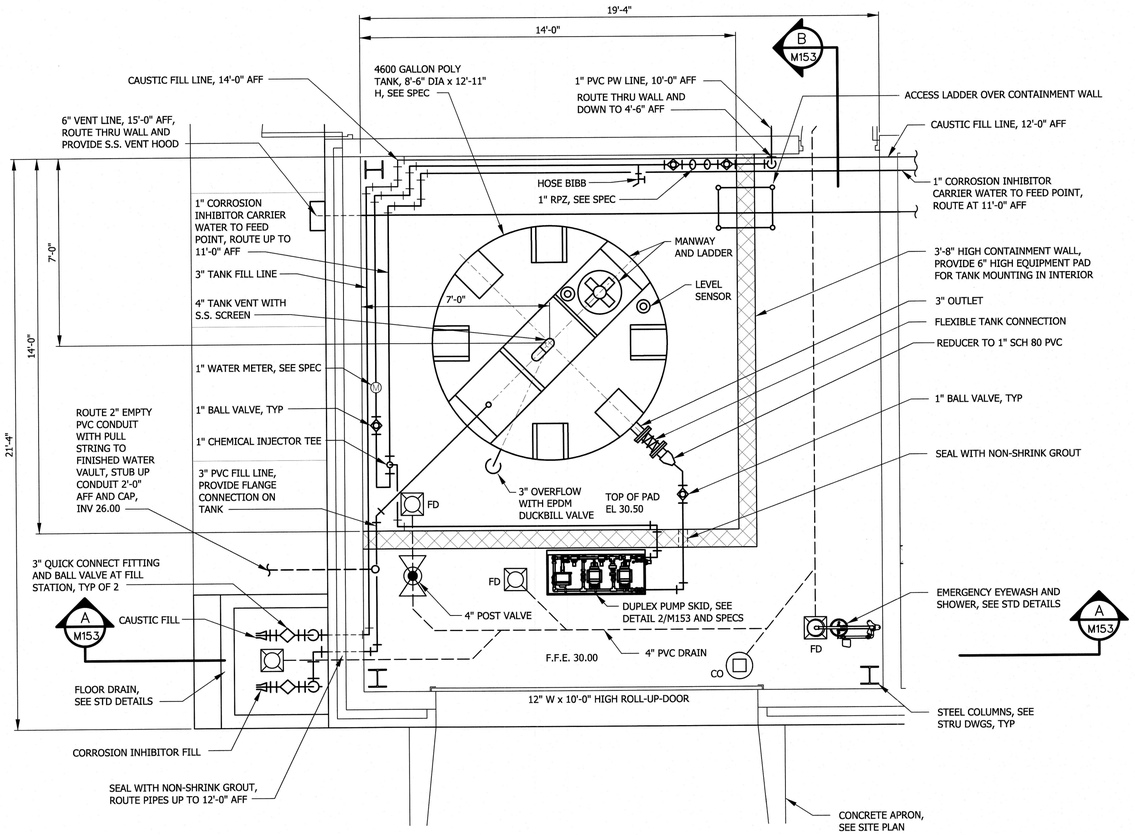

1 M150 CORROSION INHIBITOR FEED SYSTEM FLOOR PLAN
SCALE: 3/8" = 1'-0"

B M153

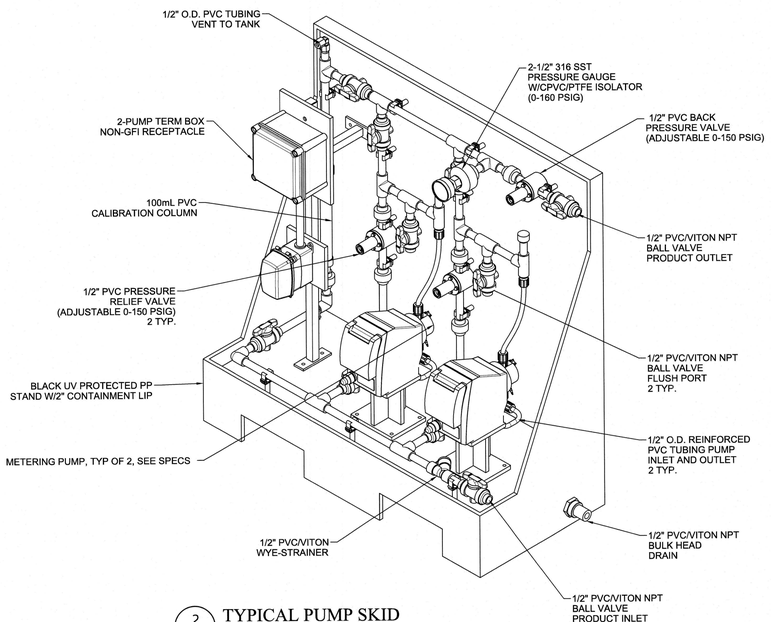

2 M153 TYPICAL PUMP SKID
NO SCALE

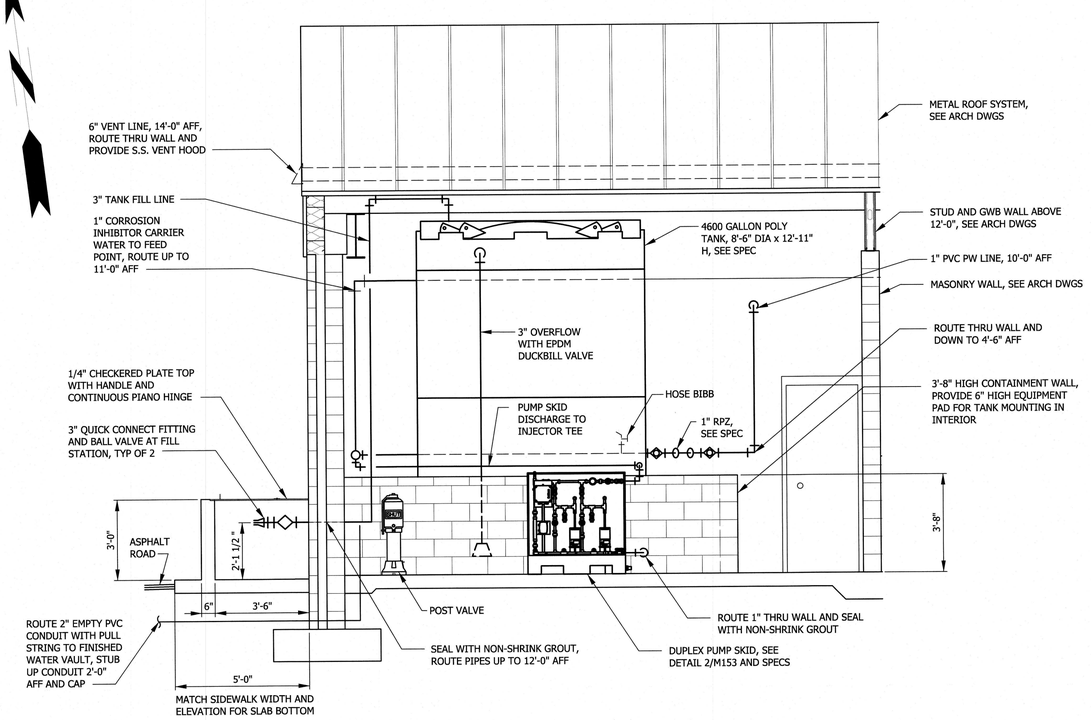

A M153 CORROSION INHIBITOR FEED SYSTEM SECTION
SCALE: 3/8" = 1'-0"

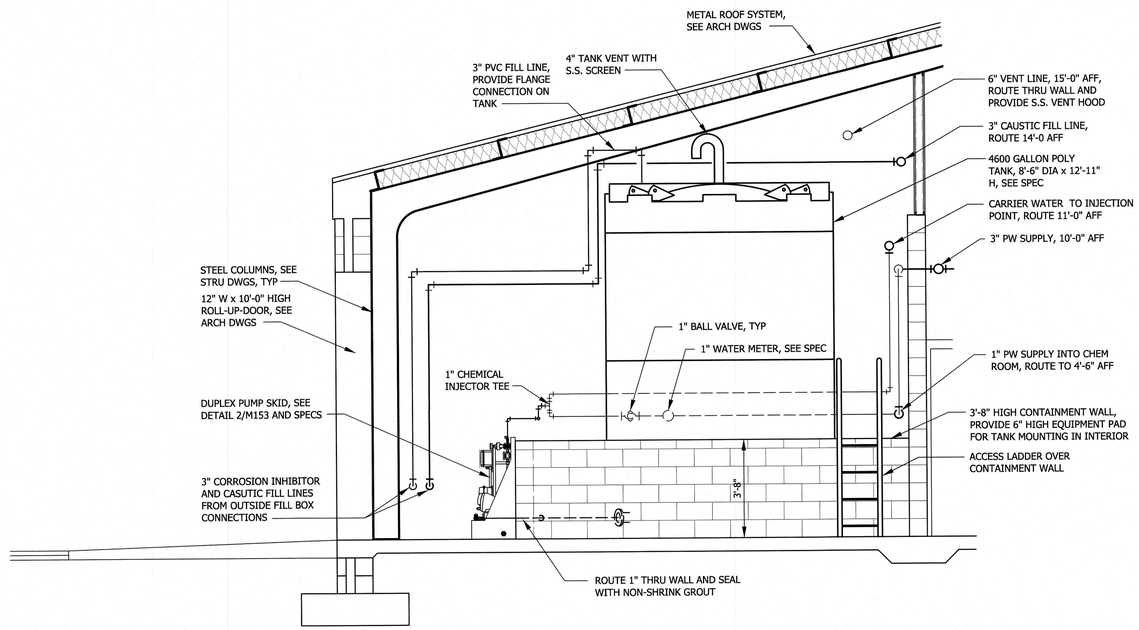

B M153 CORROSION INHIBITOR FEED SYSTEM SECTION
SCALE: 3/8" = 1'-0"

REVISIONS

THE WOOTEN COMPANY
120 North Boylan Avenue Raleigh NC 27603-1423
919.828.0531 fax 919.834.3589
License Number: F-0115

BRUNSWICK REGIONAL WATER AND SEWER H2GO
BRUNSWICK COUNTY NORTH CAROLINA
CONTRACT No. 4
REVERSE OSMOSIS WATER TREATMENT PLANT
CORROSION INHIBITOR FEED SYSTEM FLOOR PLAN AND SECTIONS

NORTH CAROLINA PROFESSIONAL SEAL 040525 ENGINEER DANIEL W. SCHIRR
7-June-20

NORTH CAROLINA PROFESSIONAL SEAL 22631 ENGINEER CHARLES W. DAVIS
7-June-20

DESIGNED BY: CWD
DRAWN BY: PMD/EML
CHECKED BY: CWD
PROJECT NO.: 3081-AB
DATE: JUNE 7, 2020
SCALE: AS NOTED

SHEET 70 OF 181

M153

Default
Print2PDFx.plt
2.6667 " / in.
pdonaghy
6/4/2020 4:26:32 PM
T:\Projects\Brunswick_Regional_W&S_H2GO-3081\AB-Water_Supply\&Treatment_Plant\Sheets\WTP\M153-CORROSION FEED.dgn

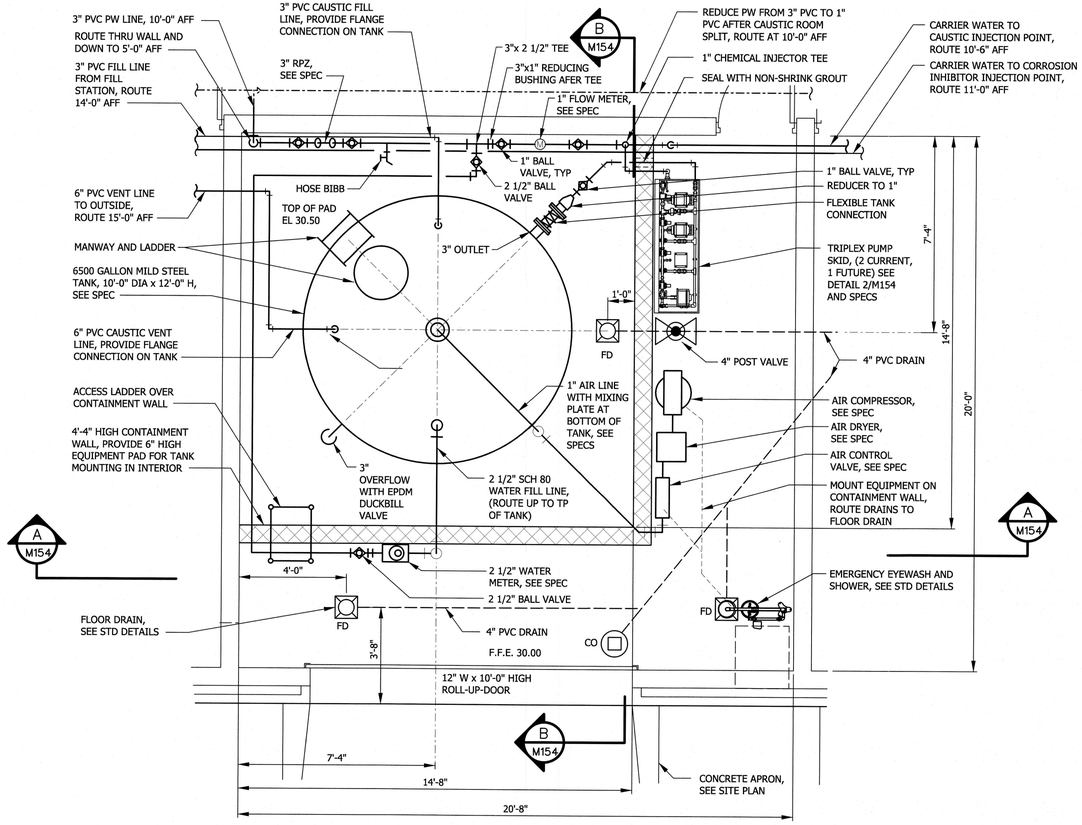

1 M150 CORROSION INHIBITOR FEED SYSTEM FLOOR PLAN
SCALE: 3/8" = 1'-0"

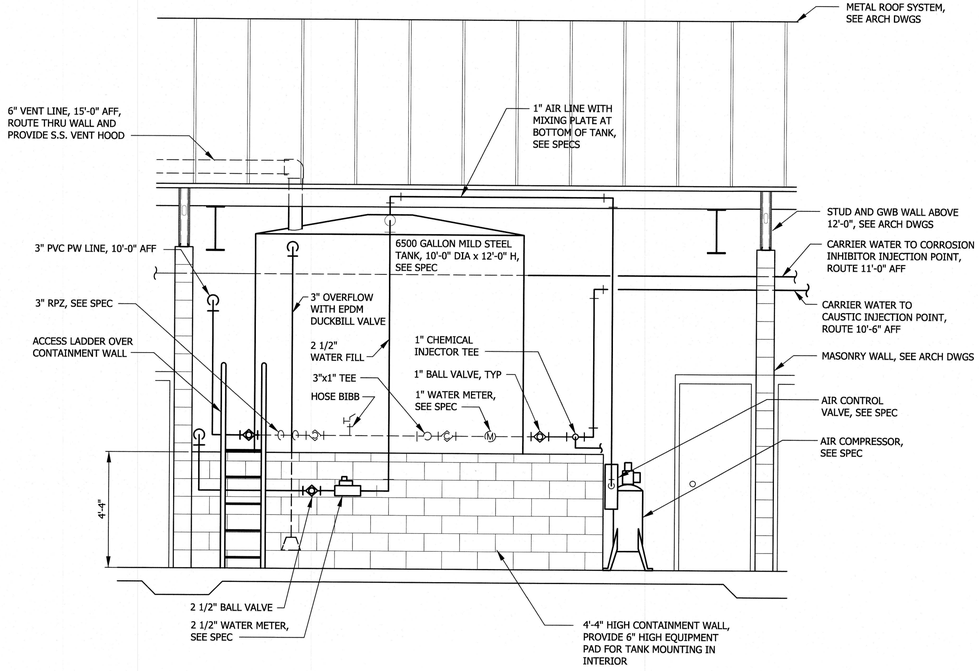

A M154 CAUSTIC FEED SYSTEM SECTION
SCALE: 3/8" = 1'-0"

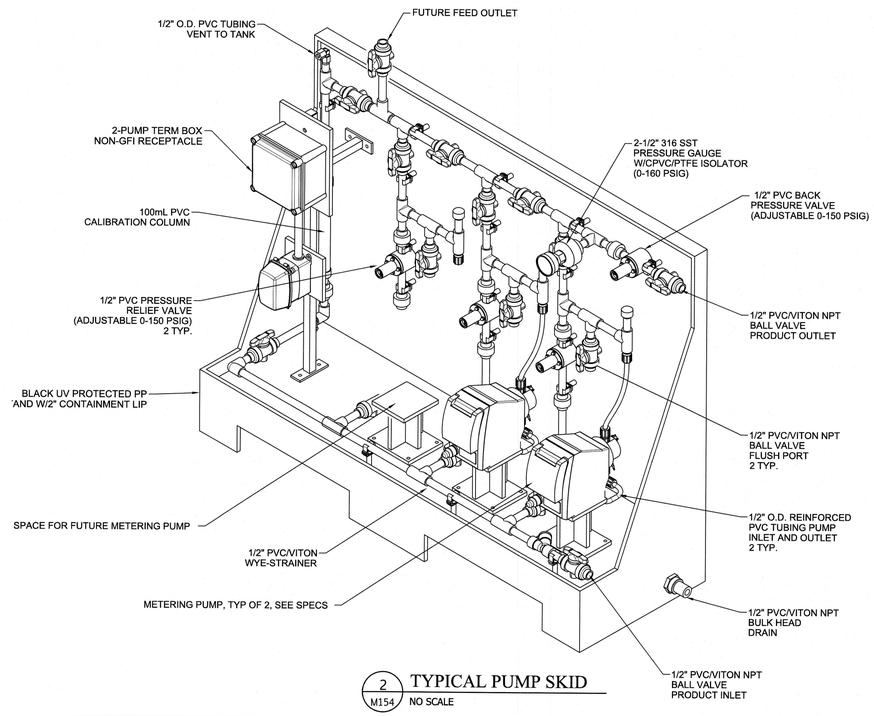

2 M154 TYPICAL PUMP SKID
NO SCALE

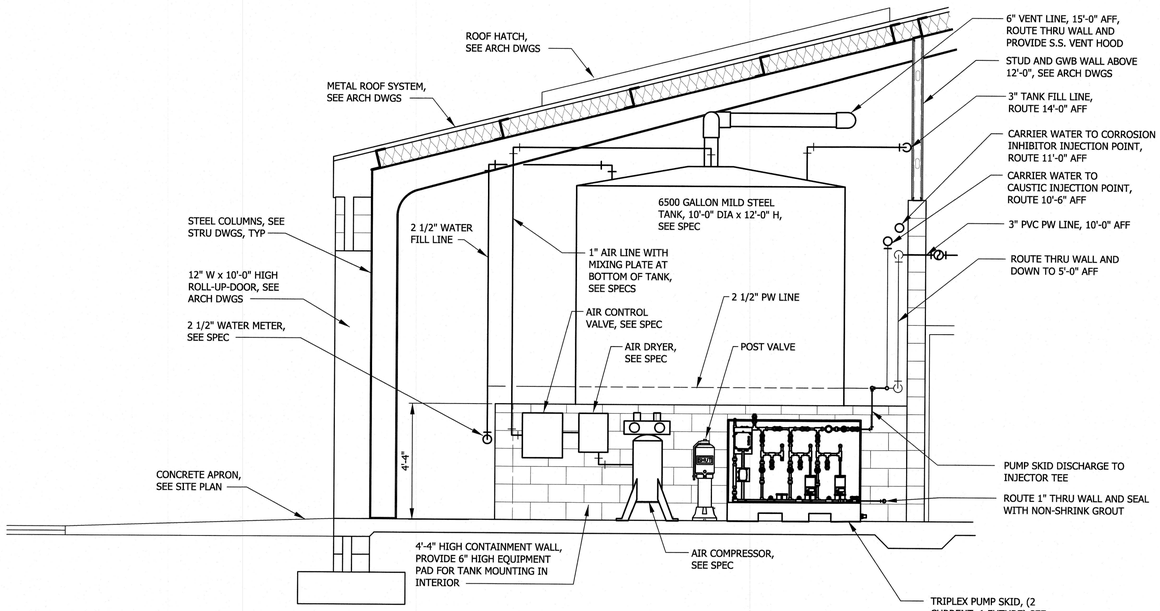

B M154 CAUSTIC FEED SYSTEM SECTION
SCALE: 3/8" = 1'-0"

REVISIONS

THE WOOTEN COMPANY
120 North Boylan Avenue Raleigh, NC 27603-1423
919.828.0531 Fax 919.834.3589
License Number: F-0115

BRUNSWICK REGIONAL WATER AND SEWER H2GO
BRUNSWICK COUNTY NORTH CAROLINA
CONTRACT No. 4
REVERSE OSMOSIS WATER TREATMENT PLANT
CAUSTIC FEED SYSTEM
FLOOR PLAN AND SECTIONS

NORTH CAROLINA PROFESSIONAL ENGINEER SEAL 040526 CHARLES W. DAVIS
7 JUNE 20

NORTH CAROLINA PROFESSIONAL ENGINEER SEAL 29631 CHARLES W. DAVIS
7 JUNE 20

DESIGNED BY: CWD
DRAWN BY: PMD/EML
CHECKED BY: CWD
PROJECT NO.: 3081-AB
DATE: JUNE 7, 2020
SCALE: AS NOTED

SHEET 71 OF 181

M154

Default
Print2PDFx.plt
2.6667 " / in.
pdonaghy
6/4/2020 4:31:21 PM
T:\Projects\Brunswick_Regional_W&S_H2GO-3081\AB-Water_Supply&Treatment_Plant\Sheets\WTP\M154-CAUSTIC FEED.dgn

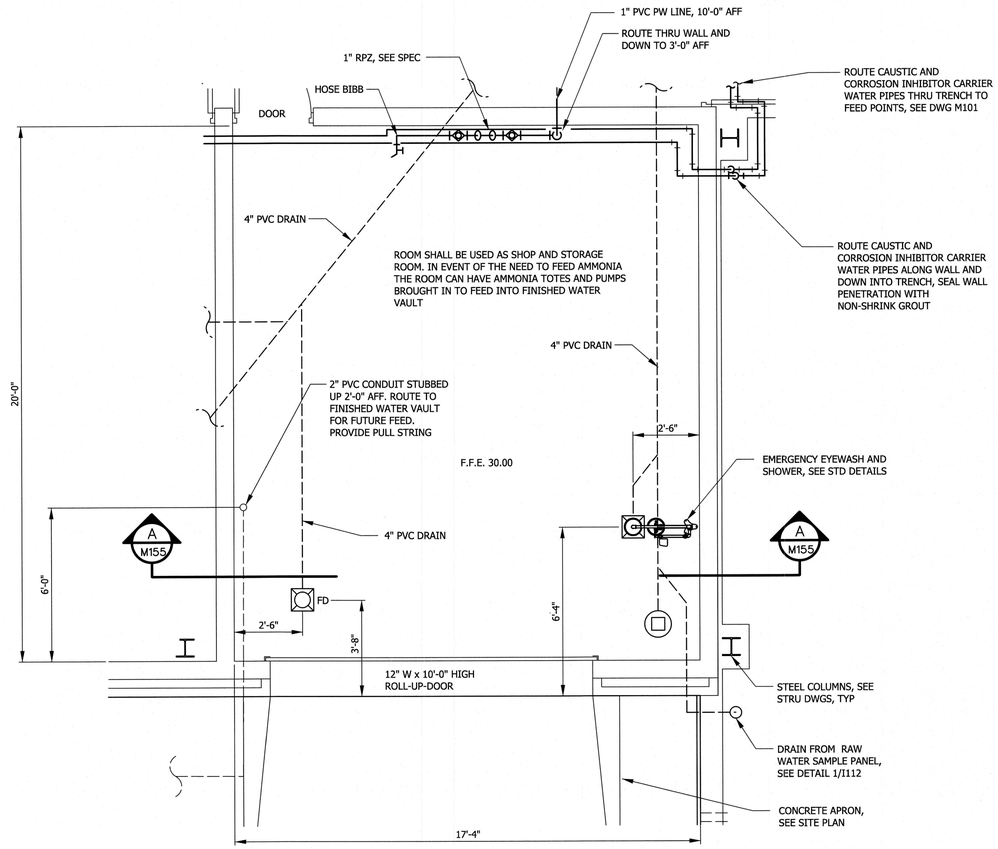

1 / M150 STORAGE / SHOP ROOM FLOOR PLAN

SCALE: 3/8" = 1'-0"

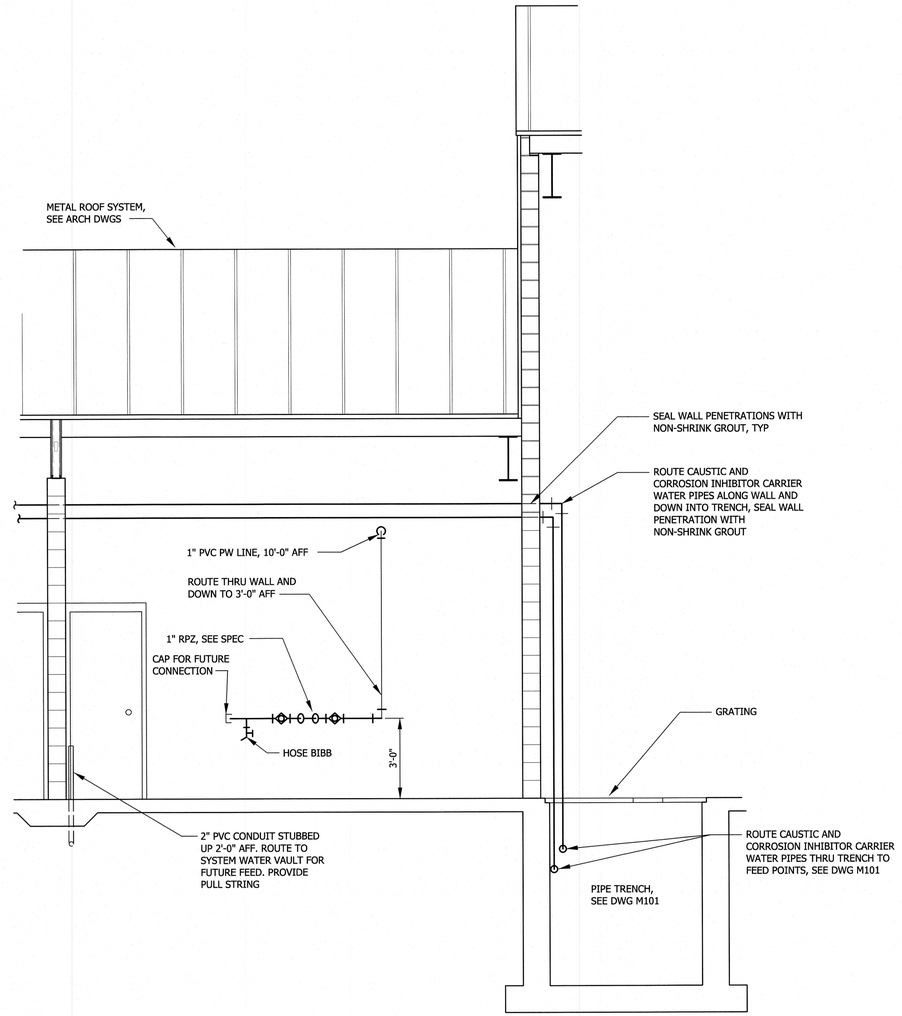

A / M155 SHOP / STORAGE ROOM SECTION

SCALE: 3/8" = 1'-0"

3/8"=1'-0"

12" 0 1' 2' 4'

REVISIONS

THE WOOTEN COMPANY
120 North Boylan Avenue Raleigh NC 27603-1423
919.828.0531 fax 919.834.3589
License Number: F-0115

BRUNSWICK REGIONAL WATER AND SEWER H2GO
BRUNSWICK COUNTY NORTH CAROLINA

CONTRACT No. 4

REVERSE OSMOSIS WATER TREATMENT PLANT

SHOP / STORAGE ROOM
FLOOR PLAN AND SECTIONS

NORTH CAROLINA PROFESSIONAL SEAL 040525 ENGINEER CARL W. SCHMIDT
7-JUNE-20

NORTH CAROLINA PROFESSIONAL SEAL 22531 ENGINEER CHARLES W. DAVIS
7-JUNE-20

DESIGNED BY: CWD
DRAWN BY: PMD/EML
CHECKED BY: CWD
PROJECT NO.: 3081-AB
DATE: JUNE 7, 2020
SCALE: AS NOTED

SHEET 72 OF 181

M155

Default

Print2PDFx.plt
2.6667 ', in.
pdonaghy
6/4/2020 4:32:24 PM
T:\Projects\Brunswick_Regional_W&S_H2GO-3081\AB-Water_Supply&Treatment_Plant\Sheets\WTP\M155-STORAGE ROOM.dgn

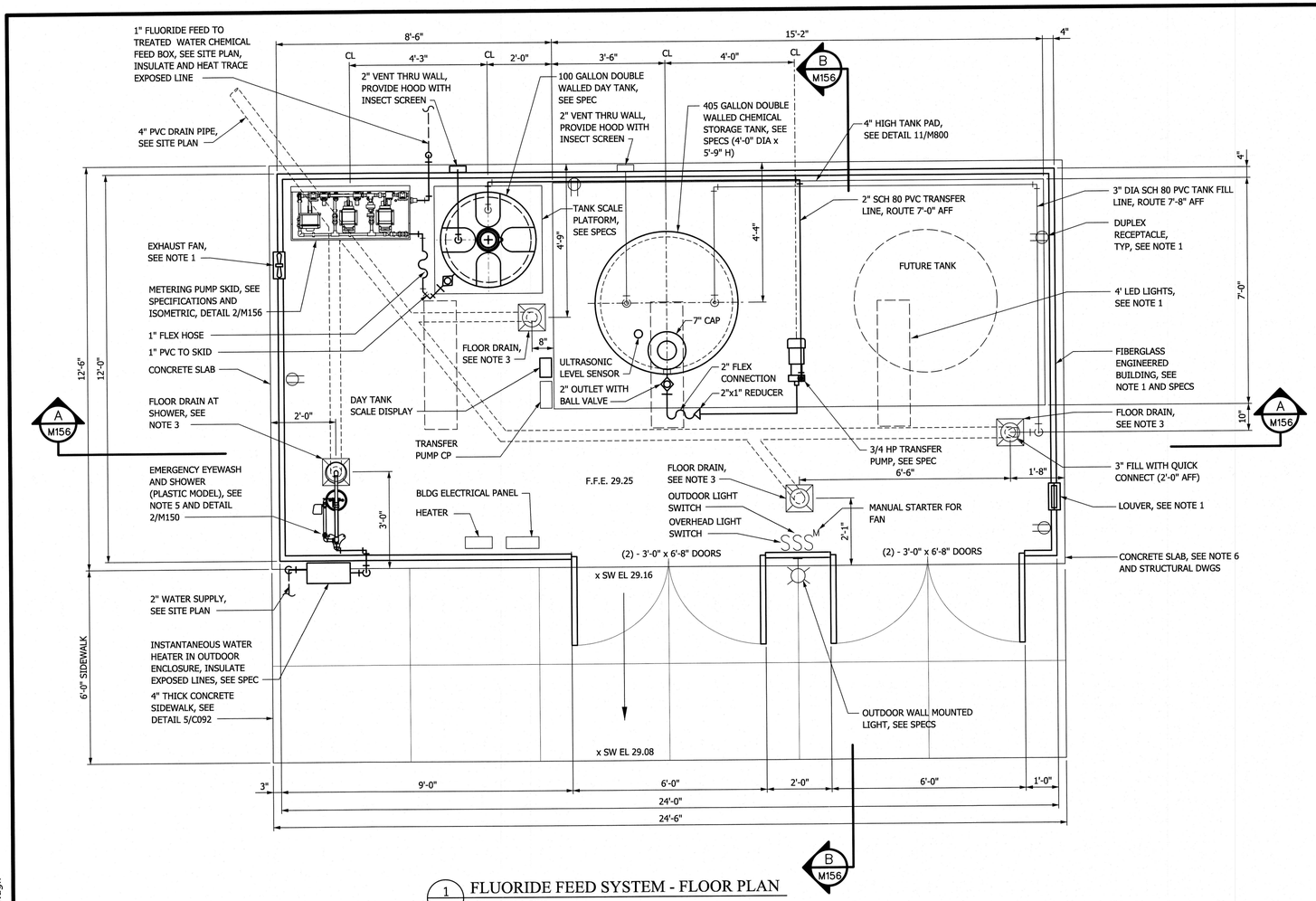

1 M150 FLUORIDE FEED SYSTEM - FLOOR PLAN
SCALE: 1/2" = 1'-0"

NOTES:

1. FIBERGLASS BUILDING MANUFACTURER SHALL PROVIDE COMPLETE BUILDING WITH WALLS, ROOF, ELECTRICAL LIGHTS, RECEPTACLES, SWITCHES, CONDUIT, LOUVER, FAN AND HEATER. ALL MATERIALS IN THE BUILDING SHALL BE COMPATIBLE WITH HYDROFLUOROSILICIC ACID. ALL HARDWARE AND BOLTS SHALL BE HASTALOY C. SEE SPECIFICATIONS
2. ALL ELECTRICAL COMPONANTS SHALL BE MADE OF MATERIALS COMPATIABLE WITH HYDROFLUORSILICIC ACID. PANELS AND CABINENTS SHALL BE NEMA 4X NON-METALIC TYPE. SEE SPECIFICATIONS
3. FLOOR DRAIN SHALL BE CHEMICAL RESISTANT FLOOR DRAINS CONTAINING NO METAL PARTS.
4. VENT HOODS SHALL BE VINYL WITH PLASTIC MESH INSECT SCREEN CONTAINING NO METAL PARTS.
5. EMERGENCY EYEWASH AND SHOWER SHALL BE OF PLASTIC MADE FROM CHEMICAL RESISTANT MATERIALS CONTAINING NO METAL PARTS.
6. CONCRETE FLOOR AND SURFACES SHALL RECEIVE A SPECIAL COATING TO PROTECT FROM HYDRFLUOROCILIC ACID, SEE SPEC SECTION 09900 - PAINTING.

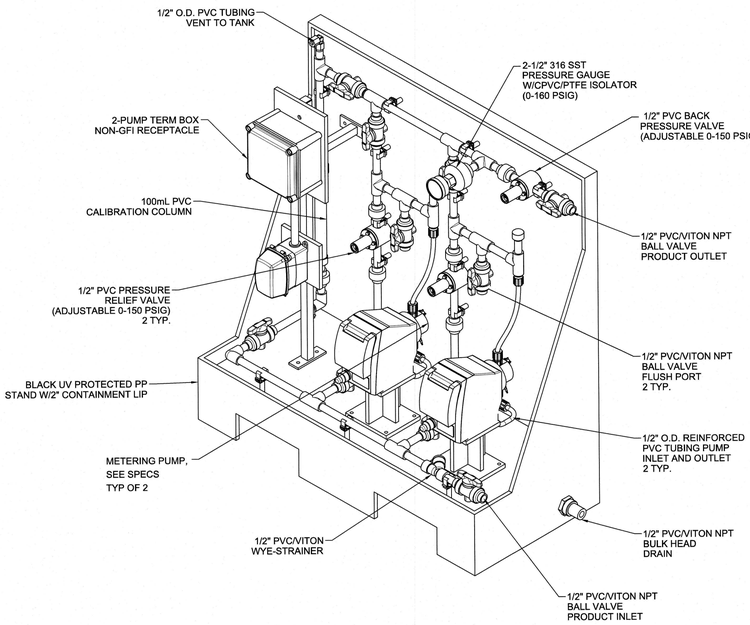

2 M156 TYPICAL PUMP SKID
NO SCALE

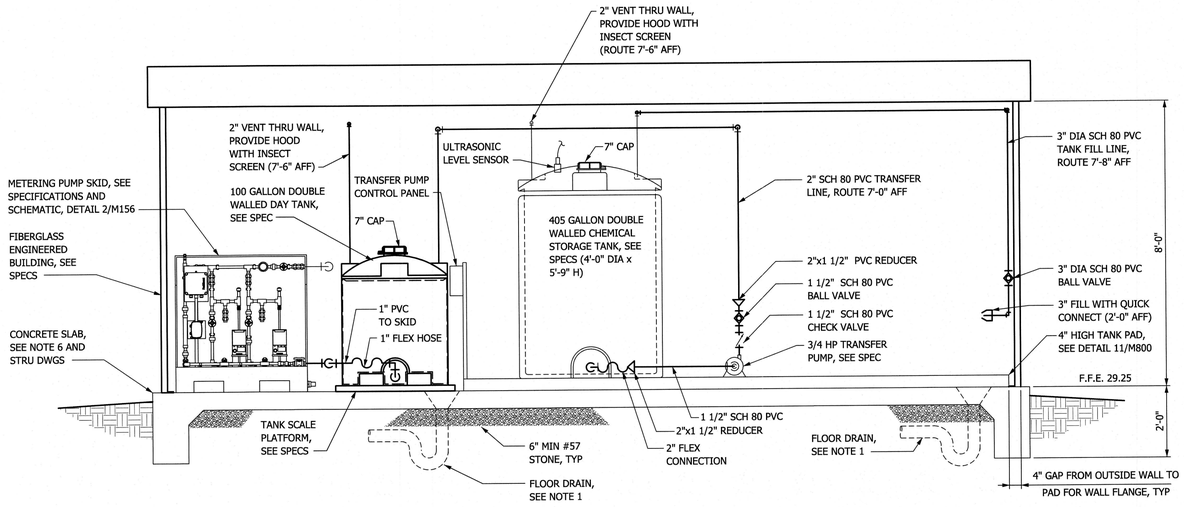

A M156 FLUORIDE FEED SYSTEM - SECTION
SCALE: 1/2" = 1'-0"

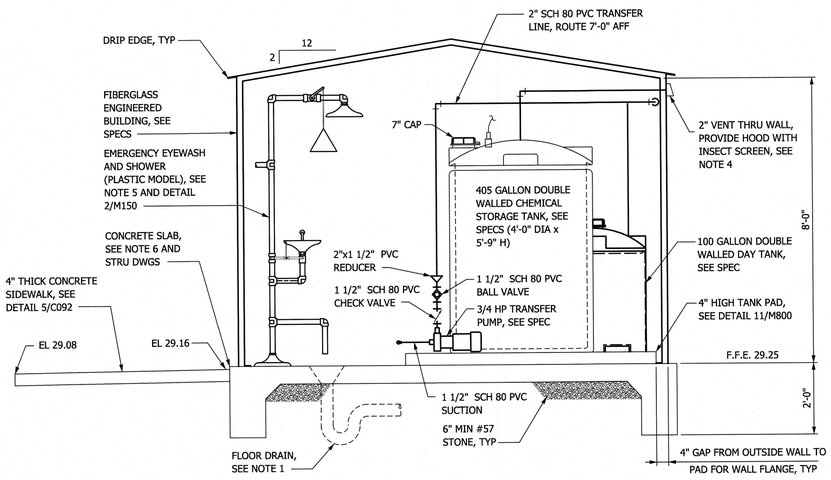

B M156 FLUORIDE FEED SYSTEM - SECTION
SCALE: 1/2" = 1'-0"

1/2"=1'-0"

REVISIONS

THE WOOTEN COMPANY
120 North Boylan Avenue Raleigh, NC 27603-1423
919.828.0531 fax 919.834.3589
License Number: F-0115

BRUNSWICK REGIONAL WATER AND SEWER H2GO
BRUNSWICK COUNTY NORTH CAROLINA
CONTRACT No. 4
REVERSE OSMOSIS WATER TREATMENT PLANT
FLUORIDE FEED SYSTEM
FLOOR PLAN AND SECTION

NORTH CAROLINA PROFESSIONAL SEAL 040625 ENGINEER CARL W. SCHURR
7-June-20

NORTH CAROLINA PROFESSIONAL SEAL 22531 ENGINEER CHARLES W. DAVIS
7-June-20

DESIGNED BY: CWD
DRAWN BY: PMD/EML
CHECKED BY: CWD
PROJECT NO.: 3081-AB
DATE: JUNE 7, 2020
SCALE: AS NOTED

SHEET 73 OF 181

M156

Default

Print2PDFx.plt
2.0000 " / in.
pdonaghy
6/4/2020 4:36:20 PM
T:\Projects\Brunswick_Regional_W&S_H2GO-3081\AB-Water_Supply&Treatment_Plant\Sheets\WTP\M156-FLOURIDE FEED.dgn

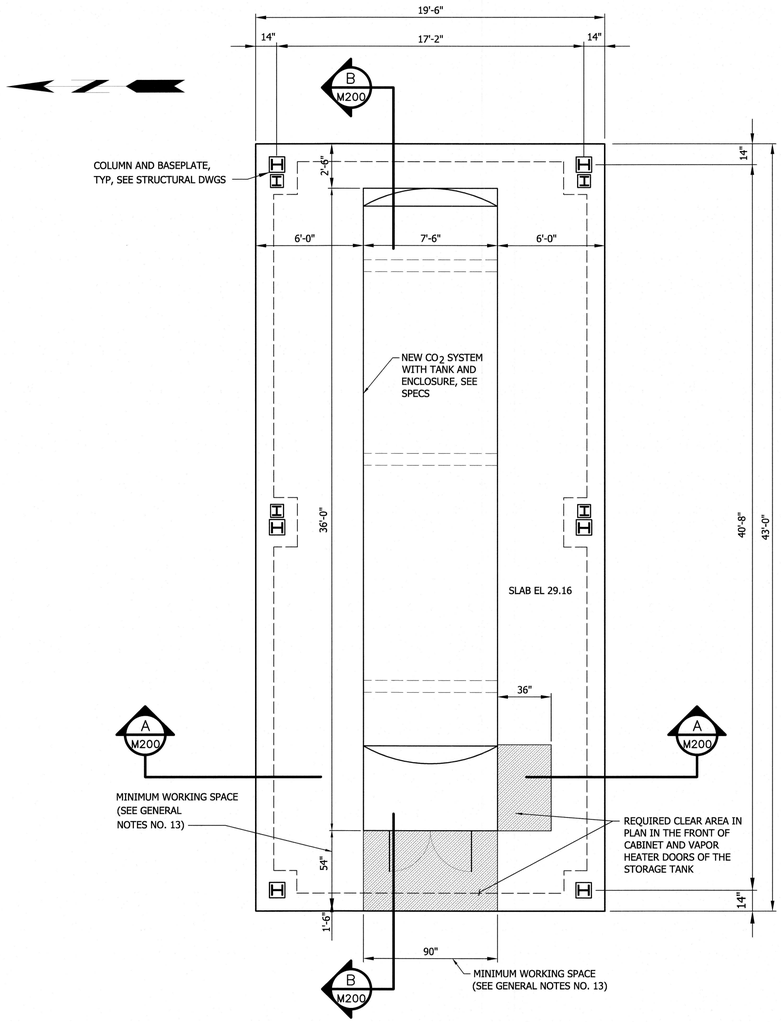

1 M200 PLAN - CO_2 SYSTEM AND BUILDING

SCALE = 1/4" = 1'-0"

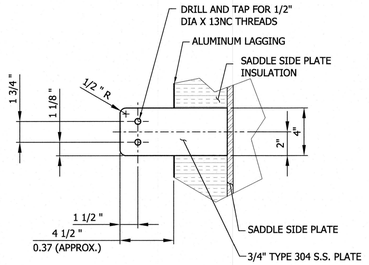

2 M200 DETAIL - GROUND LUGS (2 PLACES PER TANK)

NO SCALE

GENERAL NOTES:

1. WEIGHT EMPTY: 30,000 LBS
2. NOMINAL WEIGHT CONTENTS (FULL): 60,000 LBS
3. TOTAL VOLUME: 1012 CU.FT - 7,570 GALLONS
4. MAXIMUM ALLOWABLE WORKING PRESSURE OF VESSEL: 350 PSIG @ 200° F
5. MINIMUM DESIGN METAL TEMPERATURE OF VESSEL: -40° F @ 350 PSIG
6. NOTE: VESSEL NOT INTENDED TO BE FILLED WITH LIQUID CO_2 COLDER THAN -20° F
7. LIFTING LUGS ARE TO BE USED ONLY WHEN VESSEL IS EMPTY.
8. PRIOR TO STORAGE TANK INSTALLATION AND OPERATION, THOROUGHLY READ AND COMPLY WITH ALL INSTRUCTIONS IN THE INSTALLATION AND SERVICE MANUAL.
9. THE SAFETY RELIEF VALVE ASSEMBLY IS REMOVED FOR SHIPMENT. THE ASSEMBLY MUST BE INSTALLED PRIOR TO THE INITIAL FILLING AND OPERATION OF THE TANK.
10. THE STORAGE TANK SHALL CONSIST OF A WELDED STEEL PRESSURE VESSEL DESIGNED AND CONSTRUCTED IN ACCORDANCE WITH SECTION VIII OF THE ASME "CODE FOR UNFIRED PRESSURE VESSELS."
11. THE INNER PRESSURE VESSEL OF THE STORAGE TANK SHALL BE FABRICATED FROM ASME SA612, CARBON STEEL PLATE.
12. PRIOR TO INSULATION, THE CO_2 STORAGE TANK SURFACE IS TO BE PREPARED AND PAINTED TO TOMCO$_2$'S STANDARD.
13. MINIMUM WORKING SPACE SHALL BE PER NEC, ARTICLE 110.26. IF LOCAL CODES/REGULATIONS REQUIRE ADDITIONAL CLEARANCES, THEN LOCAL CLEARANCE SHALL SUPERCEDE.

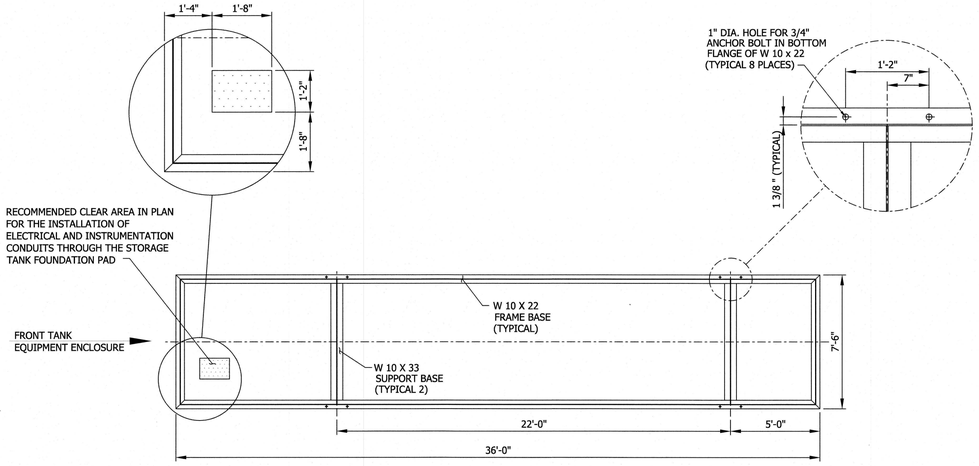

3 M200 DETAIL - ANCHOR BOLT PLAN

SCALE = 1/4" = 1'-0"

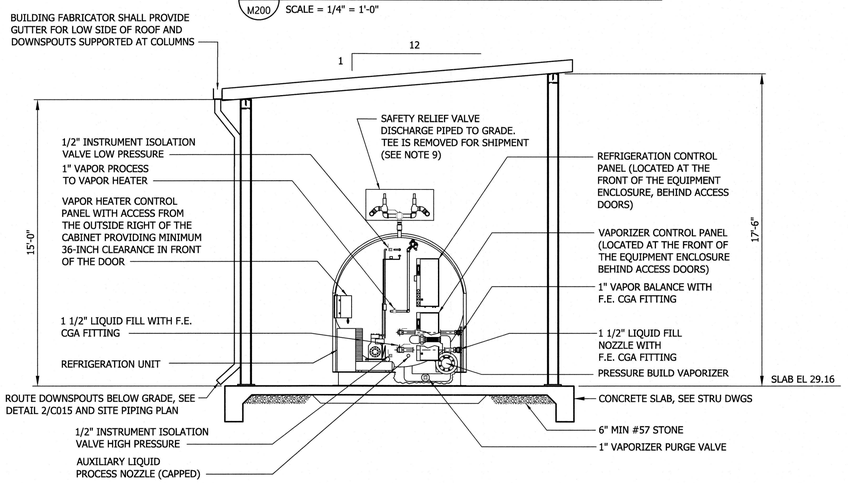

A M200 SECTION- CO_2 SYSTEM AND BUILDING

SCALE = 1/4" = 1'-0"

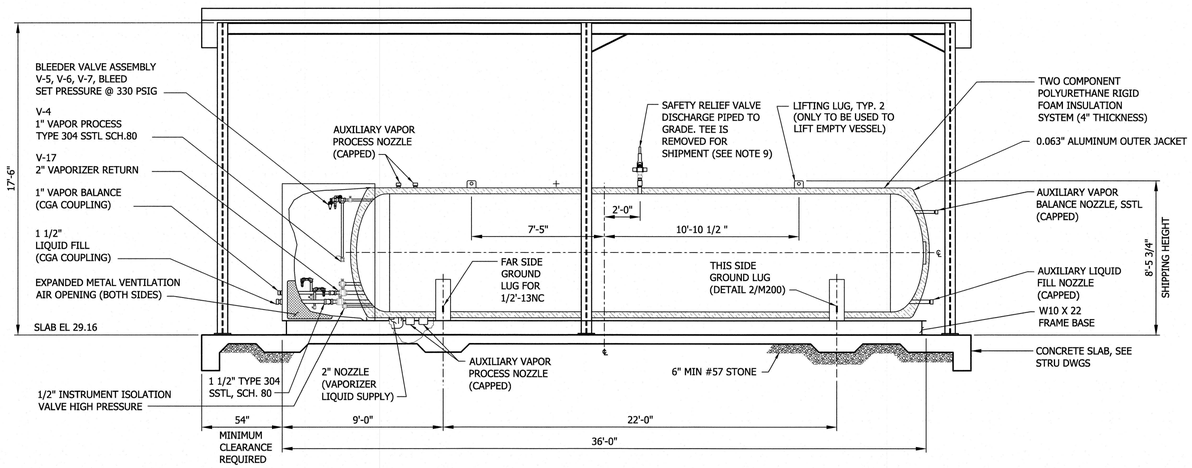

B M200 SECTION- CO_2 SYSTEM AND BUILDING

SCALE = 1/4" = 1'-0"

1/4"=1'-0"

2' 1' 0 1' 2' 6'

REVISIONS

THE WOOTEN COMPANY
120 North Boylan Avenue Raleigh, NC 27603-1423
919.828.0531 Fax 919.834.3589
License Number: F-0115

BRUNSWICK REGIONAL WATER AND SEWER H2GO
BRUNSWICK COUNTY NORTH CAROLINA
CONTRACT No. 4
REVERSE OSMOSIS WATER TREATMENT PLANT

CO_2 SYSTEM AND BUILDING

NORTH CAROLINA PROFESSIONAL SEAL 25311 ENGINEER CHARLES W. DAVIS
7-JUNE-20

DESIGNED BY: CWD
DRAWN BY: PMD/EML
CHECKED BY: CWD
PROJECT NO.: 3081-AB
DATE: JUNE 7, 2020
SCALE: AS NOTED

SHEET 74 OF 181

M200

Default
Print2PDFx.plt
4.0000 ' / in.
pdonaghy
6/4/2020 4:38:24 PM
T:\Projects\Brunswick_Regional_W&S_H2GO-3081\AB-Water_Supply&Treatment_Plant\Sheets\WTP\M200-CO2 BUILDING.dgn

Default

4" FLOOR DRAIN TO MANHOLE, , INV 23.80, SEE SITE PLAN

CONNECT 2" DIA PVC DRAIN TO 4" DRAIN, INV 23.83

20'-0" ASPHALT DRIVE

70'-0"

PRESSURE REDUCING VALVE, SEE SPECS

SLOPE DRAIN FROM 25.60 TO 23.80

10" DIA DOUBLE CHECK BACKFLOW PREVENTER, SEE SPECS

2" DIA PVC DRAIN TO MANHOLE

C M302

B M302

CRANE RAIL BEAM, TYP

COLUMN, TYP

RATE OF FLOW CONTROL BFV

10" MAG METER (IN VERTICAL RUN)

10" DIA 90° BEND (FL), TYP

PLATFORM COLUMN, TYP

SAMPLE TAPS, TYP

KNIFE GATE VALVE OPERATOR, TYP

MANWAY ACCESS, TYP

KNIFE GATE VALVE, TYP

LOADING HOPPER, TYP

D M301

6'-6"

FD INV 25.63

ROUTE FLUSH WATER PIPNG 12'-0" AFF

7'-6"

2'-6"

13'-7 3/4 "

AIR RELEASE VALVE, TYP

4" PIPE AND FLANGE FOR LEVEL SENSOR, TYP, SEE NOTE 5

3'-6" TYP

SUPER SACK STORAGE AREA

ROUTE ARV PIPING TO FLOOR DRAIN, TYP

CALCITE VESSEL No 1

LIFTING TAB, TYP

TANK CELL DRAIN VALVE, TYP EACH TANK

10"x10" DIA TEE (FL)

10" DIA BLIND FLANGE FOR FUTURE CONNECTION, TYP OF 4

14" DIA 90° BEND (FL), TYP

ASPHALT DRIVE (UNLOADING AREA)

STAIRS

SADDLE TYPE PIPE SUPPORT, SEE DETAIL 1/M800, TYP

A M301

14" DIA 90° BEND (FL), TYP

14" DIA 90° BEND (MJ), TYP

14" x 24" BULL HEADED TEE (MJ)

10" DIA 90° BEND (FL), TYP

4" DRAIN, SLOPE 1/4" PER FT

A M301

5'-1 3/8 "

60'-0"

32'-8 1/2 "

FD INV 25.75

FD INV 25.83

FACE PIPING, BY MFR, TYP

FD INV 25.93

9'-2"

10'-0"

20'-0"

20'-0"

14" DIA BUTTERFLY VALVE (FL) WITH CHAIN OPERATOR

2'-6" TYP

12"x12" DIA TEE (MJ)

24" DIA PIPE WITH PLUG FOR FUTURE CONNECTION

24" x24" DIA TEE (MJ)

10" POTABLE WATER (FLUSH WATER SUPPLY)

HANGER TYPE SUPPORT, 8'-0" O.C. MAX., SEE DETAIL 8/M800, TYP

24" DIA 90° BEND (MJ), TYP

24" x24" DIA TEE (FL)

DROP DOWN TO FLUSH WATER HEADER AND CONNECT

24" DIA BLIND FLANGE (FUTURE CONNECTION)

14"x24" CONCENTRIC REDUCER (FL)

CALCITE VESSEL No 2

24"x14" DIA TEE (FL)

2" DIA PVC DRAIN TO MANHOLE

3'-0"x3'-0" ALUMINUM ACCESS HATCH, SEE SPECS

30'-0"

3'-6"

12'-0"

CELL DIVIDER WALL, TYP

SEAL WITH NON-SHRINK GROUT, TYP

12" WASTE LINE (FLUSH WATER RETURN) (INV 26.67)

2" JOSAM 57400 OR EQUAL BACKFLOW VALVE, INV 24.17

10" DIA, INV 25.33

5'-0" DIA PRECAST MANHOLE, CAST TOP INTO SLAB, INV 24.00

12" WASTE LINE (FLUSH WATER RETURN) (INV 24.50 TO 23.96)

TAPPING SADDLE WITH CORP STOP

13'-7 3/4 "

2'-2"

4" PIPE AND FLANGE FOR LEVEL SENSOR, TYP, SEE NOTE 5

21'-11"

36'-0"

12'-1"

12"DIA 45° BEND (MJ)

12"DIA 90° BEND (MJ), ROTATE 45°

ENCASE PIPE AND FITTINGS UNDER SLAB (END PIPE RESTRAINT)

5'-0"

24" TREATED WATER (EFFLUENT) (RESTRAINED JOINT PIPE)

1" POLY SAMPLE LINE IN 2" PVC CONDUIT TO SAMPLE PANEL IN R.O. BLDG, SEE SITE PLAN

4'-9 1/2 "

4'-3 1/2"

24" PERMEATE (INFLUENT) (RESTRAINED JOINT PIPE)

B M302

23'-3 1/4 "

C M302

24" DIA 90° BEND (RESTRAINED JOINT), TYP

1/4"=1'-0"

2' 1' 0 1' 2' 6'

1 M300 CALCITE CONTACTORS - PLAN

SCALE: 1/4" = 1'-0"

NOTES:

1. CALCITE CONTACTOR TANKS SHALL BE BY SINGLE MANUFACTURER AND SUPPLIED AS COMPLETE TREATMENT UNIT INCLUDED TANKS, FACE PIPING AND VALVES, LOADING HOPPERS, GATE KNIFE VALVES, AIR RELEASE VALVES, ACCESS MANWAYS, LEVEL PROBES, SAMPLE TAP, CONTROL PANEL AND OTHERS NOT LISTED. SEE SPECIFICATION FOR EQUIPMENT SUPPLIED BY MANUFACTURER. ALL EQUIPMENT NOT SPECIFIED SHALL BE PROVIDED BY CONTRACTOR.
2. BUILDING SHALL BE A PRE-ENGINEERED STEEL FRAME BUILDING WITH ROOF AND OPEN SIDES, SEE SPECIFICATIONS FOR DETAILS.
3. ALL WALKWAYS, GRATING, LADDERS, STAIRS, HANDRAILS, AND WALKWAY ACCESS HATCHES ARE TO BE PROVIDED BY CONTRACTOR, UNLESS OTHERWISE NOTED ON DRAWINGS.
4. ALL CALCITE CONTACTOR INFLUENT, EFFLUENT, FLUSH SUPPLY AND FLUSH WASTE PIPING, PIPING SUPPORTS AND ALL PIPING APPURTENANCES ARE BY THE CONTRACTOR, UNLESS OTHERWISE NOTED ON DRAWINGS.
5. CALCITE CONTACTOR TANK MANUFACTURER SHALL MAKE ADJUSTMENTS TO LOCATION OF LEVEL SENSOR AND/OR LOCATION OF COLLECTION PIPE INSIDE TANK TO AVOID CONFLICTS OR BEAM INTERFERENCE.
6. SEE DETAIL 4/C093 FOR EXPOSED PIPE/VALVE INSULATION.

REVISIONS

THE WOOTEN COMPANY
120 North Boylan Avenue Raleigh, NC 27603-1423
919.828.0531 fax 919.834.3589
License Number: F-0115

BRUNSWICK REGIONAL WATER AND SEWER H2GO
BRUNSWICK COUNTY NORTH CAROLINA

CONTRACT No. 4

REVERSE OSMOSIS WATER TREATMENT PLANT

CALCITE TREATMENT FACILITY
FLOOR PLAN

NORTH CAROLINA PROFESSIONAL ENGINEER SEAL 040526 ANDREW W. SCHAFF 7-June-20

NORTH CAROLINA PROFESSIONAL ENGINEER SEAL 22531 CHARLES W. DAVIS 7-June-20

DESIGNED BY: CWD
DRAWN BY: PMD/EML
CHECKED BY: CWD
PROJECT NO.: 3081-AB
DATE: JUNE 7, 2020
SCALE: AS NOTED

SHEET 75 OF 181

M300

Print2PDFx.plt
4.0000 " / in.
pdonaghy
6/4/2020 4:40:37 PM
T:\Projects\Brunswick_Regional_W&S_H2GO-3081\AB-Water_Supply&Treatment_Plant\Sheets\WTP\M300 CALCITE PLAN.dgn

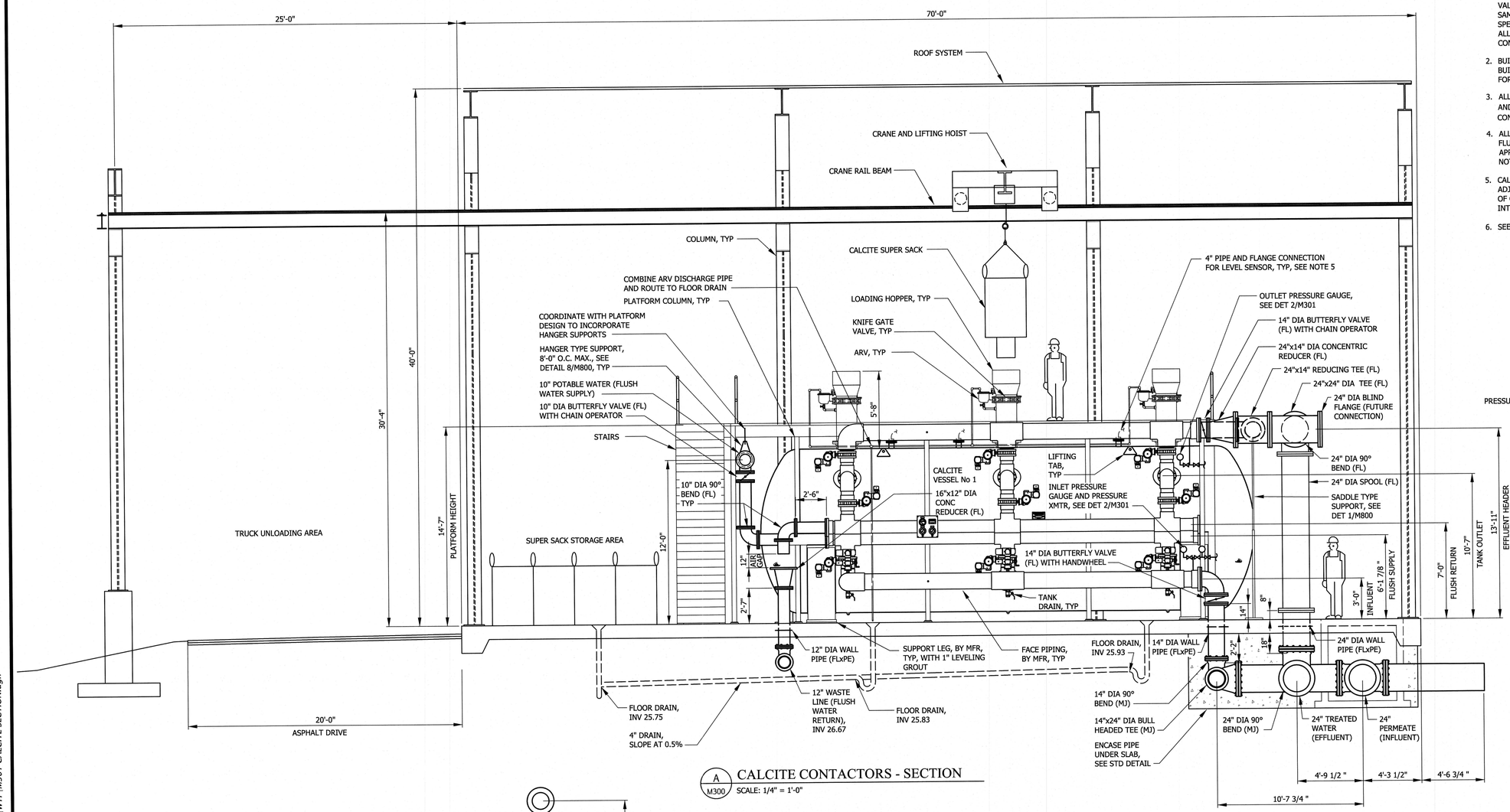

A M300 CALCITE CONTACTORS - SECTION
SCALE: 1/4" = 1'-0"

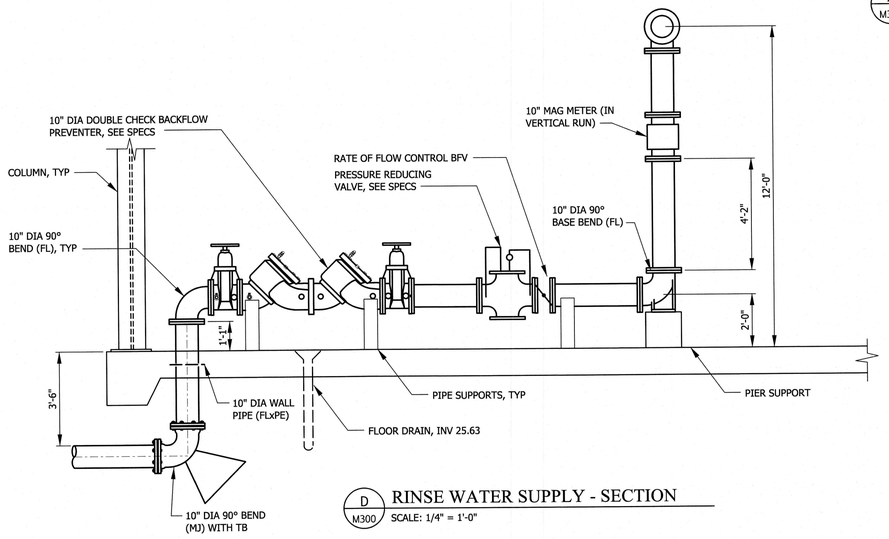

D M300 RINSE WATER SUPPLY - SECTION
SCALE: 1/4" = 1'-0"

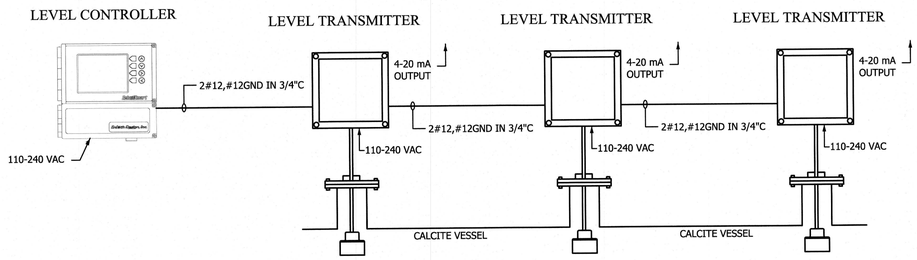

1 M301 CALCITE LEVEL CONTROL SCHEMATIC
NO SCALE

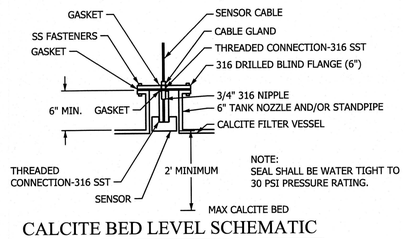

CALCITE BED LEVEL SCHEMATIC
SCALE: NTS

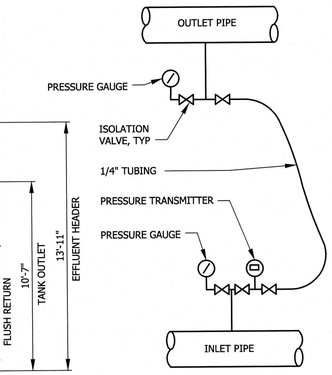

LOSS OF HEAD INSTRUMENT PANEL
2 M301 NO SCALE

3/8"=1'-0" 12" 0 1' 2' 4'

1/4"=1'-0" 2' 1' 0 1' 2' 6'

NOTES:

1. CALCITE CONTACTOR TANKS SHALL BE BY SINGLE MANUFACTURER AND SUPPLIED AS COMPLETE TREATMENT UNIT INCLUDED TANKS, FACE PIPING AND VALVES, LOADING HOPPERS, GATE KNIFE VALVES, AIR RELEASE VALVES, ACCESS MANWAYS, LEVEL PROBES, SAMPLE TAP, CONTROL PANEL AND OTHERS NOT LISTED. SEE SPECIFICATION FOR EQUIPMENT SUPPLIED BY MANUFACTURER. ALL EQUIPMENT NOT SPECIFIED SHALL BE PROVIDED BY CONTRACTOR.
2. BUILDING SHALL BE A PRE-ENGINEERED STEEL FRAME BUILDING WITH ROOF AND OPEN SIDES, SEE SPECIFICATIONS FOR DETAILS.
3. ALL WALKWAYS, GRATING, LADDERS, STAIRS, HANDRAILS, AND WALKWAY ACCESS HATCHES ARE TO BE PROVIDED BY CONTRACTOR, UNLESS OTHERWISE NOTED ON DRAWINGS.
4. ALL CALCITE CONTACTOR INFLUENT, EFFLUENT, FLUSH SUPPLY AND FLUSH WASTE PIPING, PIPING SUPPORTS AND ALL PIPING APPURTENANCES ARE BY THE CONTRACTOR, UNLESS OTHERWISE NOTED ON DRAWINGS.
5. CALCITE CONTACTOR TANK MANUFACTURER SHALL MAKE ADJUSTMENTS TO LOCATION OF LEVEL SENSOR AND/OR LOCATION OF COLLECTION PIPE INSIDE TANK TO AVOID CONFLICTS OR BEAM INTERFERENCE.
6. SEE DETAIL 4/C093 FOR EXPOSED PIPE AND VALVE INSULATION.

REVISIONS

THE WOOTEN COMPANY
120 North Boylan Avenue Raleigh NC 27603-1423
919.828.0531 fax 919.834.3589
License Number: F-0115

BRUNSWICK REGIONAL WATER AND SEWER H2GO
BRUNSWICK COUNTY NORTH CAROLINA
CONTRACT No. 4
REVERSE OSMOSIS WATER TREATMENT PLANT
CALCITE TREATMENT FACILITY
SECTIONS

NORTH CAROLINA PROFESSIONAL SEAL 040525 ENGINEER CARL W. SCHARTZ 7-June-20

NORTH CAROLINA PROFESSIONAL SEAL 22531 ENGINEER CHARLES W. DAVIS 7-JUNE-20

DESIGNED BY: CWD
DRAWN BY: PMD/EML
CHECKED BY: CWD
PROJECT NO.: 3081-AB
DATE: JUNE 7, 2020
SCALE: AS NOTED

SHEET 76 OF 181

M301

Default
Print2PDFx.plt
4.0000 " / in.
pdonaghy
6/4/2020 4:44:54 PM
T:\Projects\Brunswick_Regional_W&S_H2GO-3081\AB-Water_Supply&Treatment_Plant\Sheets\WTP\M301 CALCITE SECTION.dgn

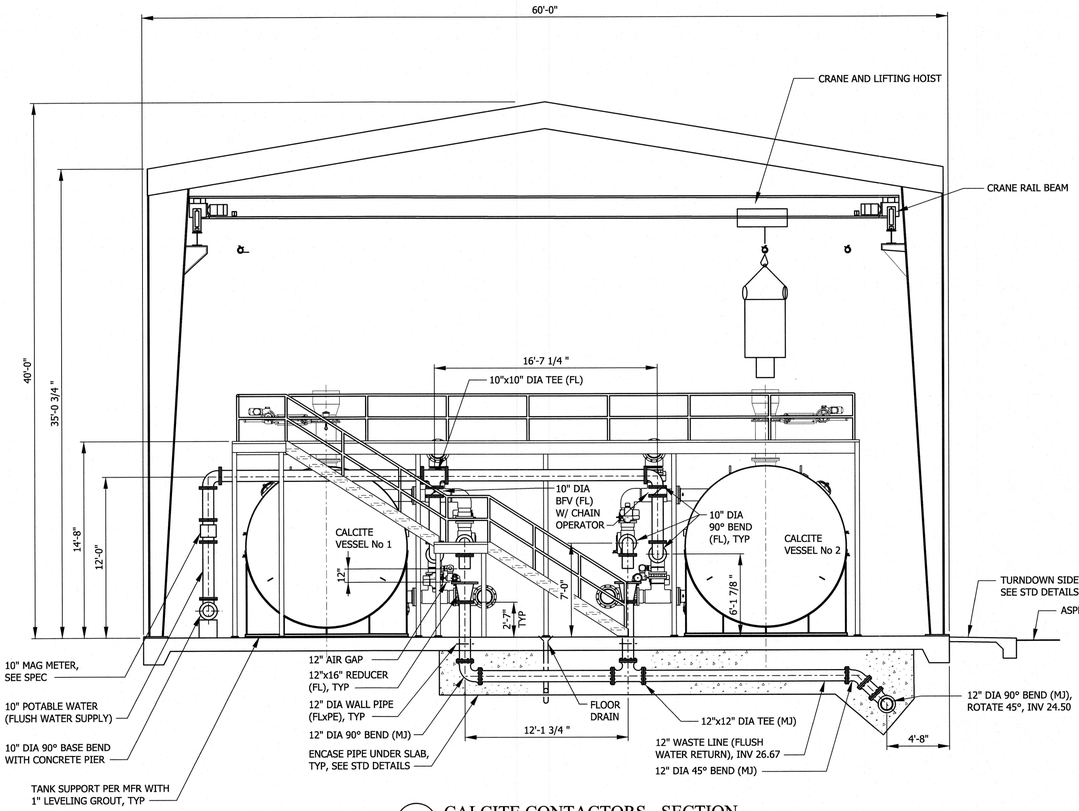

B M300 CALCITE CONTACTORS - SECTION

SCALE: 3/16" = 1'-0"

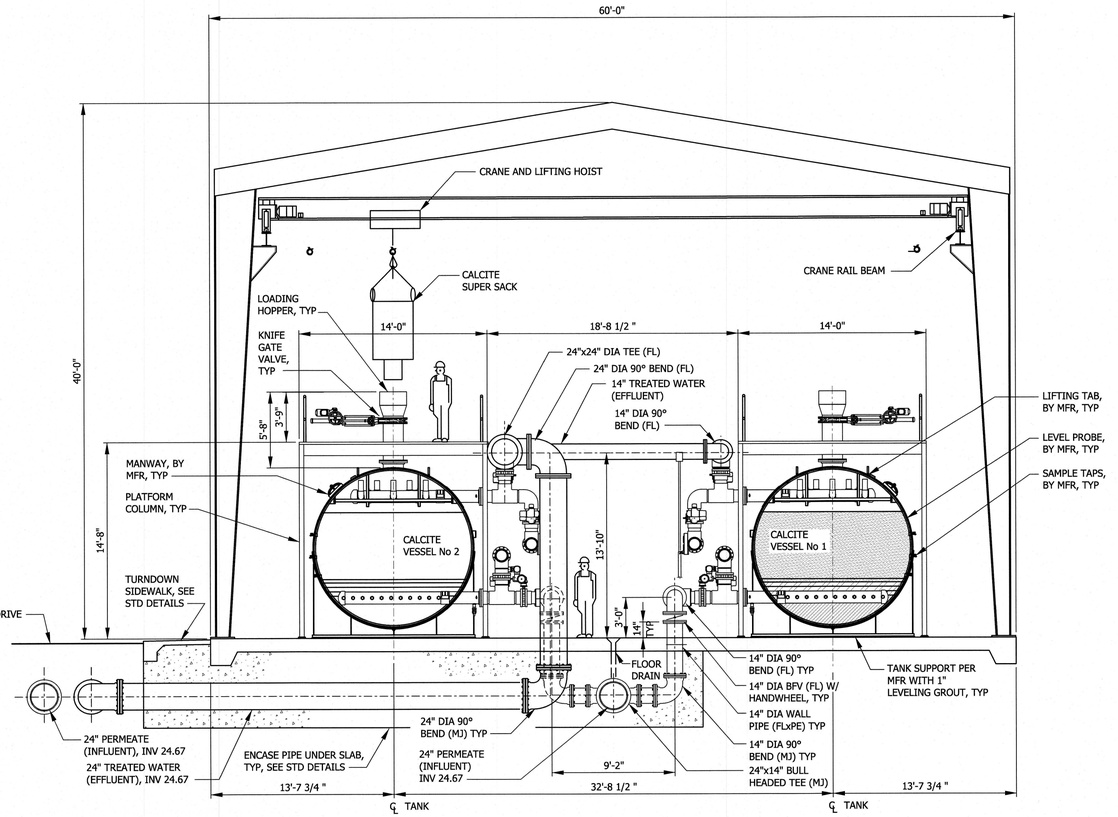

C M300 CALCITE CONTACTORS - SECTION

SCALE: 3/16" = 1'-0"

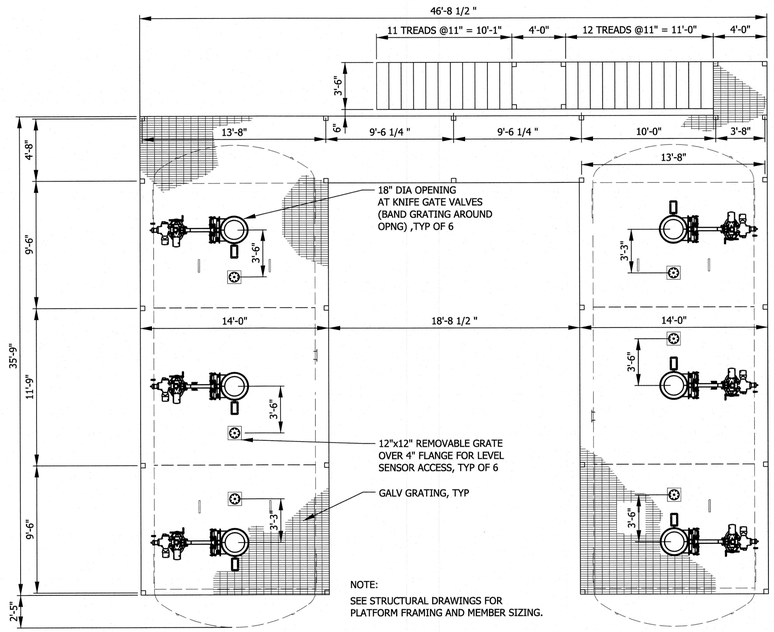

1 M302 DETAIL - ELEVATED PLATFORM PLAN

SCALE: 3/16" = 1'-0"

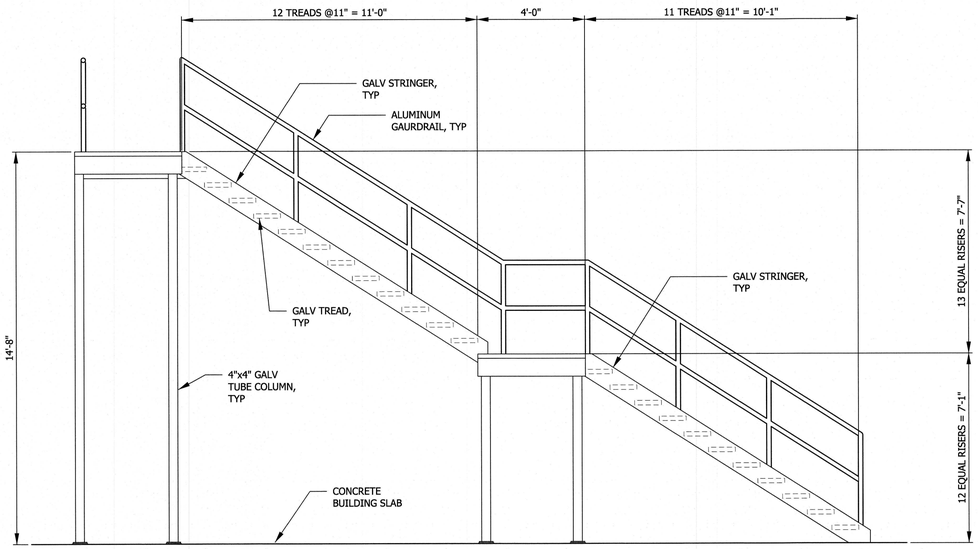

NOTE:

STAIRS SHOWN AS TYPICAL. CONTRACTOR SHALL HAVE STAIR FABRICATOR SUBMIT SIGNED AND SEALED DRAWINGS BY A NORTH CAROLINA STRUCTURAL ENGINEER DURING SHOP DRAWING REVIEW SHOWING STAIR AND PLATFORM SIZING AND GEOMETRY.

E M302 SECTION - PLATFORM STAIRS

SCALE: 3/8" = 1'-0"

3/8"=1'-0" 12" 0 1' 2' 4"

3/16"=1'-0" 6' 4' 2' 0 5'

REVISIONS

THE WOOTEN COMPANY
120 North Boylan Avenue Raleigh NC 27603-1423
919.828.0531 Fax 919.834.3589
License Number: F-0115

BRUNSWICK REGIONAL WATER AND SEWER H2GO
BRUNSWICK COUNTY NORTH CAROLINA
CONTRACT No. 4
REVERSE OSMOSIS WATER TREATMENT PLANT
CALCITE TREATMENT FACILITY
SECTIONS

NORTH CAROLINA PROFESSIONAL SEAL 040525 ENGINEER CHARLES W. SCHURKE
7-June-20

NORTH CAROLINA PROFESSIONAL SEAL 22551 ENGINEER CHARLES W. DAVIS
7-June-20

DESIGNED BY: CWD
DRAWN BY: PMD/EML
CHECKED BY: CWD
PROJECT NO.: 3081-AB
DATE: JUNE 7, 2020
SCALE: AS NOTED

SHEET 77 OF 181

M302

Default
Print2PDFx.plt
5.3333 ' / in.
pdonaghy
6/4/2020 4:46:39 PM
T:\Projects\Brunswick_Regional_W&S_H2GO-3081\AB-Water_Supply&Treatment_Plant\Sheets\WTP\M302CALCITE SECTION2.dgn

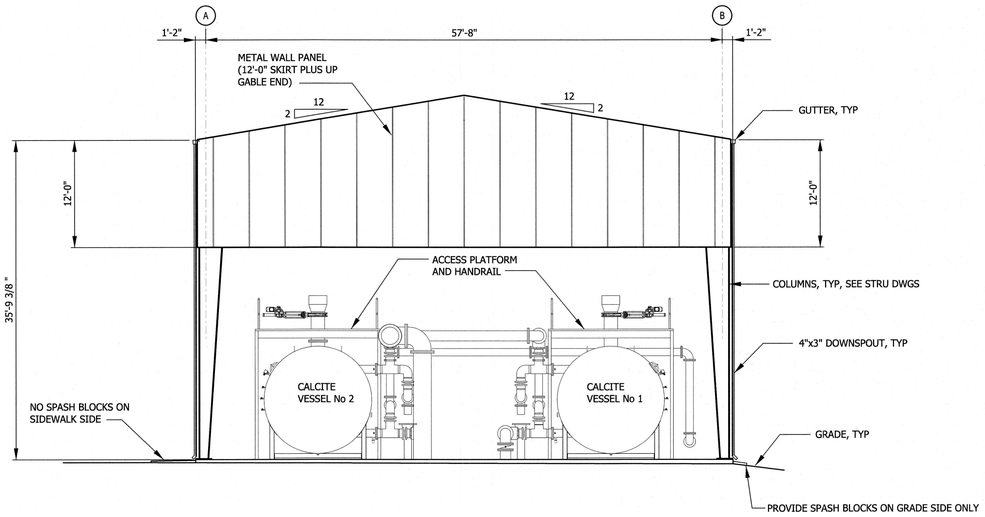

1 M300 CALCITE FACILITY - SOUTH ELEVATION
SCALE: 1/8" = 1'-0"

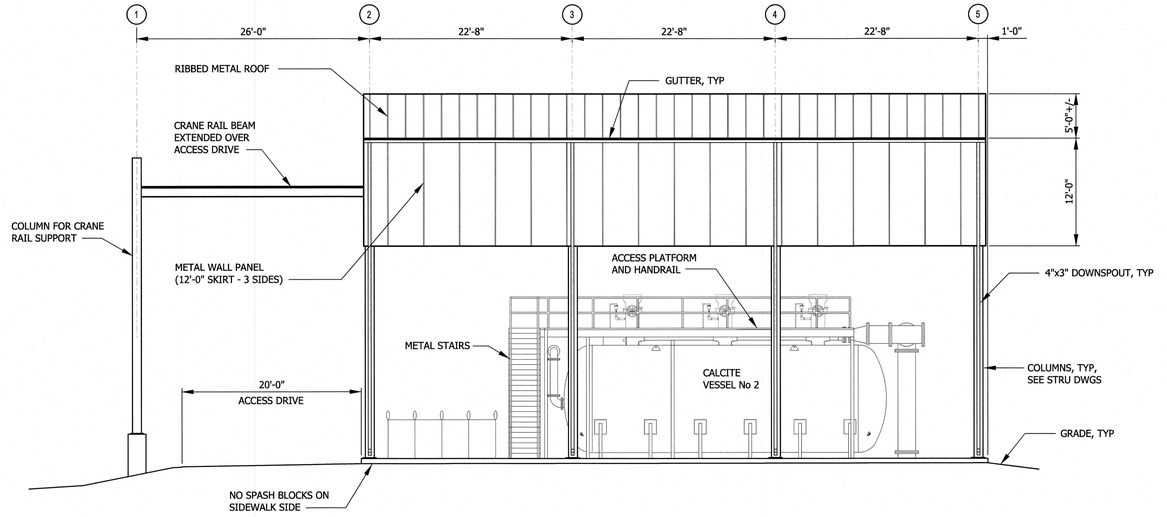

2 M300 CALCITE FACILITY - EAST ELEVATION
SCALE: 1/8" = 1'-0"

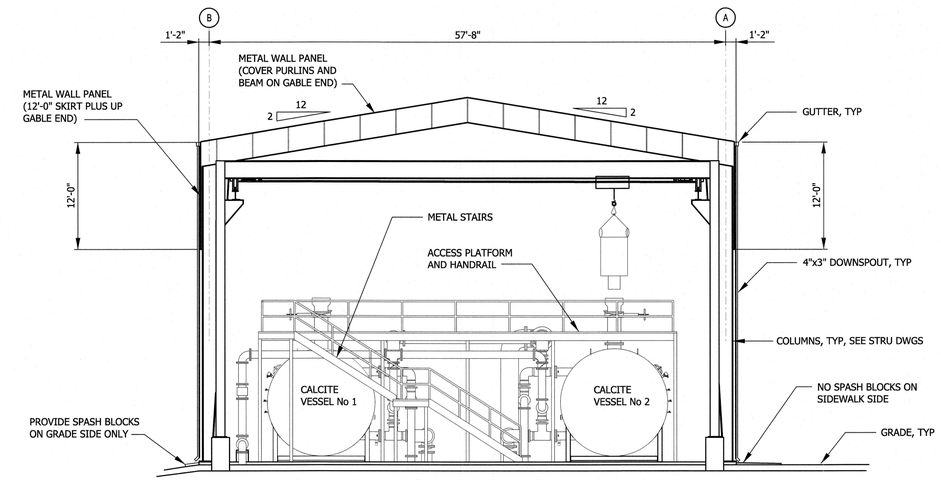

3 M300 CALCITE FACILITY - NORTH ELEVATION
SCALE: 1/8" = 1'-0"

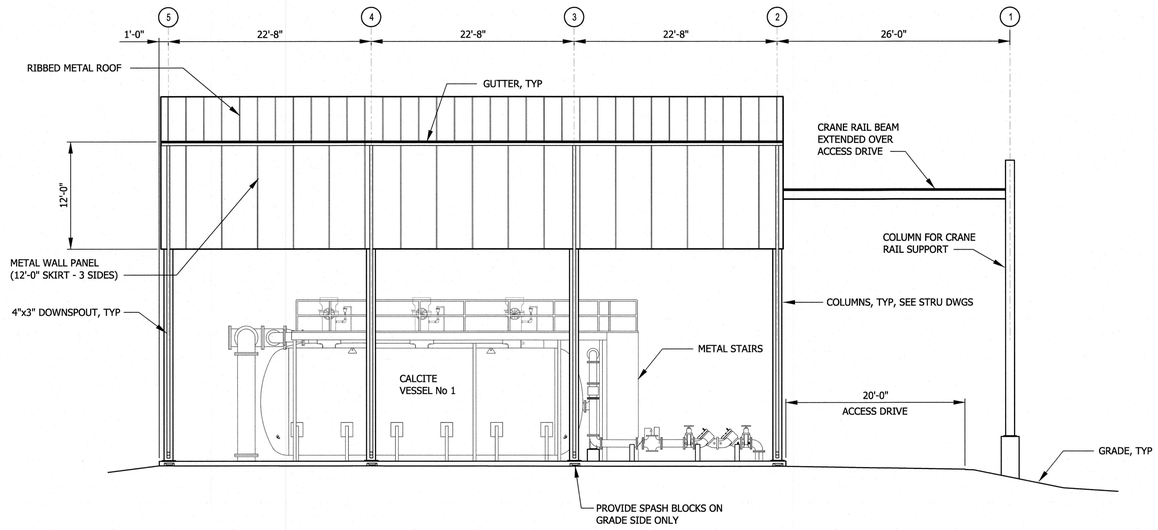

4 M300 CALCITE FACILITY - WEST ELEVATION
SCALE: 1/8" = 1'-0"

REVISIONS

THE WOOTEN COMPANY
120 North Boylan Avenue Raleigh NC 27603-1423
919.828.0531 fax 919.834.3589
License Number: F-0115

BRUNSWICK REGIONAL WATER AND SEWER H2GO
BRUNSWICK COUNTY NORTH CAROLINA
CONTRACT No. 4
REVERSE OSMOSIS WATER TREATMENT PLANT
CALCITE TREATMENT FACILITY
BUILDING ELEVATIONS

NORTH CAROLINA PROFESSIONAL SEAL 040525 ENGINEER CARL W. SCHARFE
7-June-20

NORTH CAROLINA PROFESSIONAL SEAL 22531 ENGINEER CHARLES W. DAVIS
7-June-20

DESIGNED BY:	CWD
DRAWN BY:	PMD/EML
CHECKED BY:	CWD
PROJECT NO.:	3081-AB
DATE:	JUNE 7, 2020
SCALE:	AS NOTED

SHEET 78 OF 181

M303

Default

Print2PDFx.plt
8.0000 ' / in.
pdonaghy
6/4/2020 5:08:11 PM
T:\Projects\Brunswick_Regional_W&S_H2GO-3081\AB-Water_Supply&Treatment_Plant\Sheets\WTP\M303 CALCITE ELEVATIONS.dgn

Default

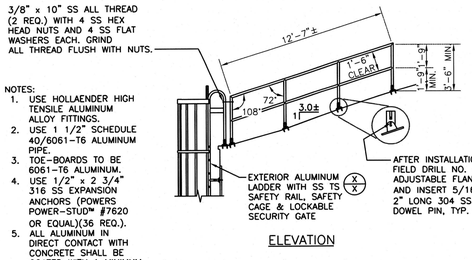

NOTES:
1. USE HOLLAENDER HIGH TENSILE ALUMINUM ALLOY FITTINGS.
2. USE 1 1/2" SCHEDULE 40/6061-T6 ALUMINUM PIPE.
3. TOE-BOARDS TO BE 6061-T6 ALUMINUM.
4. USE 1/2" x 2 3/4" 316 SS EXPANSION ANCHORS (POWERS POWER-STUD™ #7620 OR EQUAL)(36 REQ.).
5. ALL ALUMINUM IN DIRECT CONTACT WITH CONCRETE SHALL BE COATED WITH A MINIMUM 8.0 DRY MIL THICKNESS SERIES 46-465 H.B. TNEMECOL OR EQUAL.

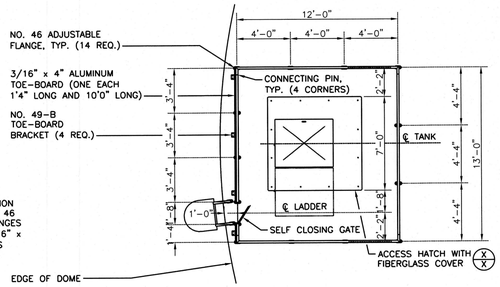

2 M400 DETAIL - ALUMINUM HANDRAIL
NTS

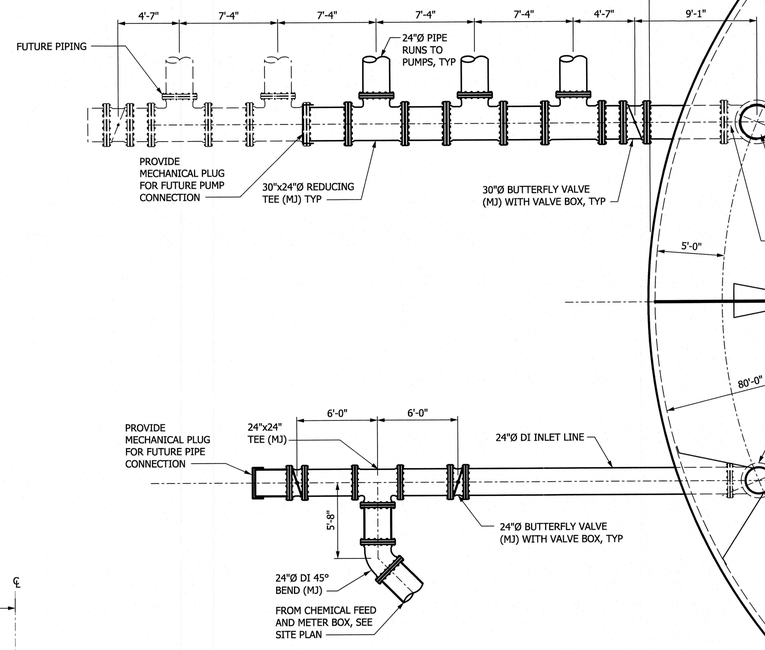

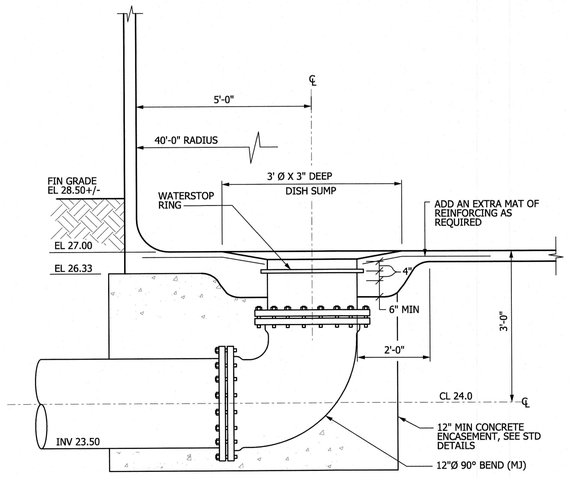

1 M400 DETAIL - 12" DRAIN
NTS

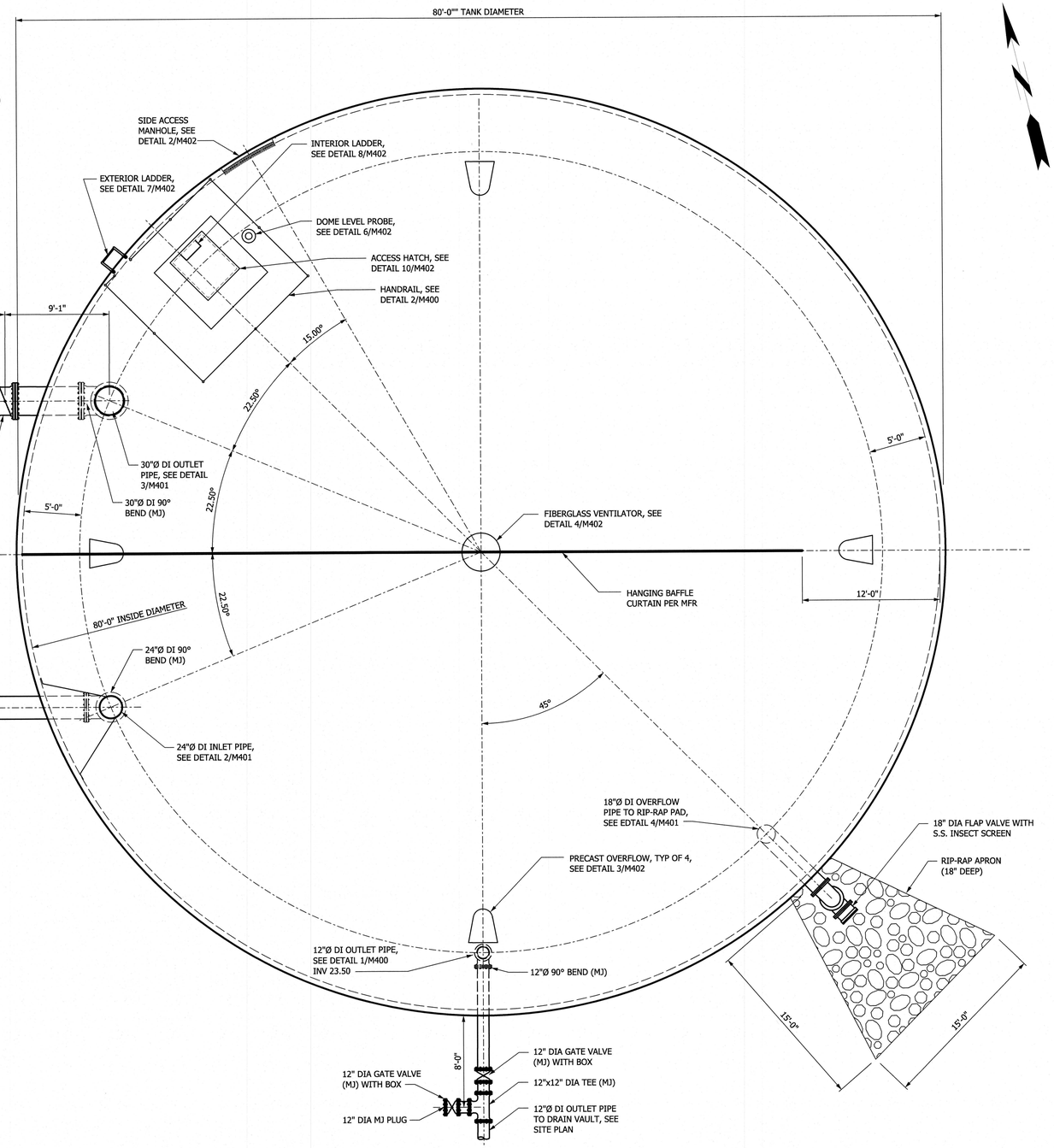

PLAN - FINISHED WATER STORAGE GROUND TANK
SCALE: 3/16" = 1'-0"

3/16"=1'-0" 6' 4' 2' 0 5'

REVISIONS

THE WOOTEN COMPANY
120 North Boylan Avenue Raleigh, NC 27603-1423
919.828.0531 fax 919.834.3589
License Number: F-0115

BRUNSWICK REGIONAL WATER AND SEWER H2GO
BRUNSWICK COUNTY NORTH CAROLINA
CONTRACT No 4
REVERSE OSMOSIS WATER TREATMENT PLANT
FINISHED WATER STORAGE GROUND TANK PLAN

NORTH CAROLINA PROFESSIONAL SEAL 040525 ENGINEER CHARLES W. SCHUMPP
7-JUNE-20

NORTH CAROLINA PROFESSIONAL SEAL 32531 ENGINEER CHARLES W. DAVIS
7-JUNE-20

DESIGNED BY: CWD
DRAWN BY: PMD/EML
CHECKED BY: CWD
PROJECT NO.: 3081-AB
DATE: JUNE 7, 2020
SCALE: AS SHOWN

SHEET 79 OF 181

M400

Print2PDFx.plt
5'4 sf:si / in.
patonaghy
6/4/2020 4:51:03 PM
T:\Projects\Brunswick_Regional_W&S_H2GO-3081\AB-Water_Supply&Treatment_Plant\Sheets\WTP\M400_groundSTORAGE1.dgn

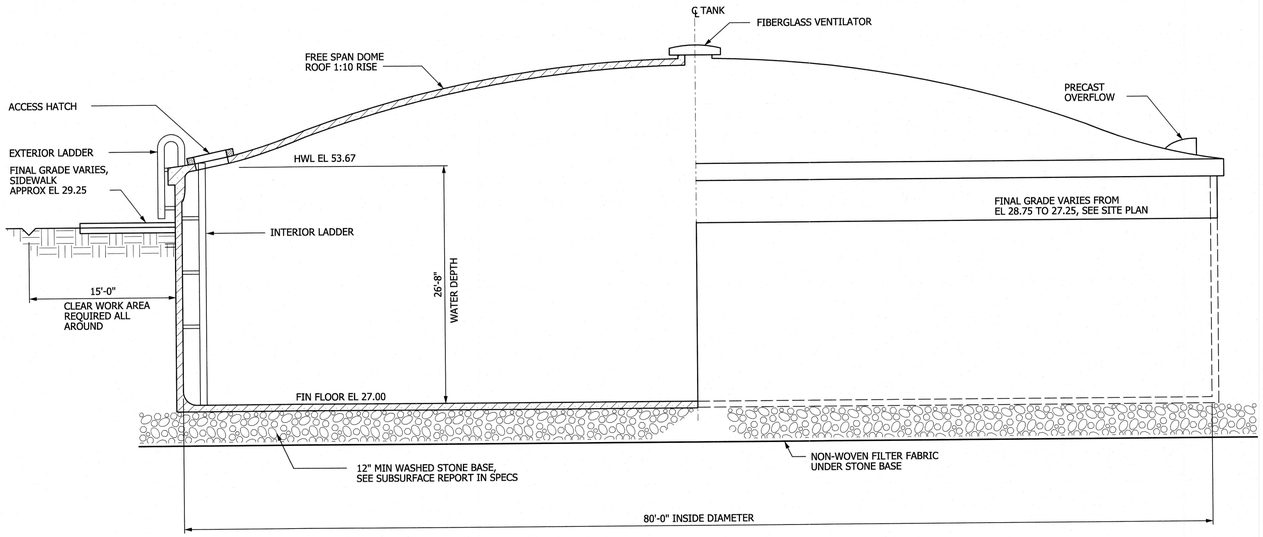

TYPICAL TANK ELEVATION

NO SCALE

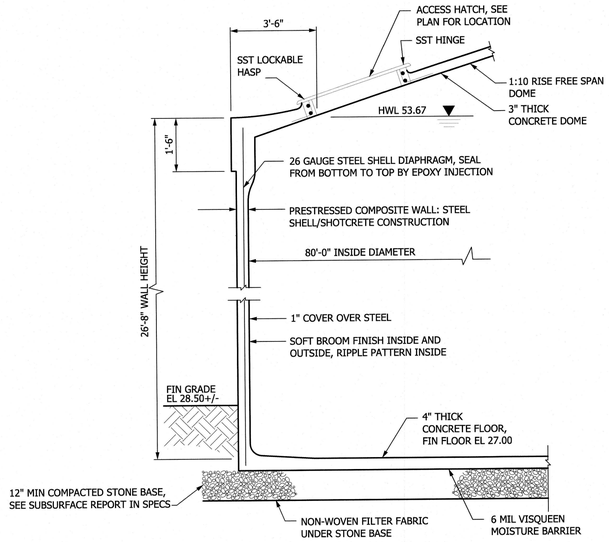

1 / M400 DETAIL - TYPICAL WALL

SCALE: 1/2" = 1'-0"

NOTES:

1. SHOTCRETE SHALL BE APPLIED BY OR UNDER DIRECT SUPERVISION OF NOZZLEMEN CERTIFIED IN ACCORDANCE WITH ACI GUIDELINES.
2. TENSION IN PRESTRESSING WIRE SHALL BE MEASURED BY AN ELECTRONIC DIRECT-READING STRESSOMETER ACCURATE TO WITHIN 1%

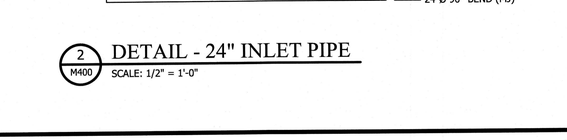

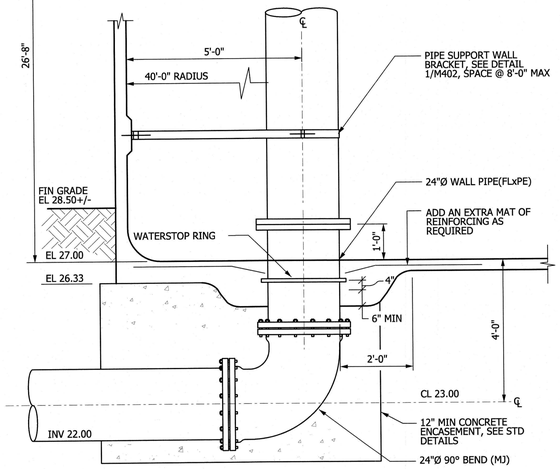

2 / M400 DETAIL - 24" INLET PIPE

SCALE: 1/2" = 1'-0"

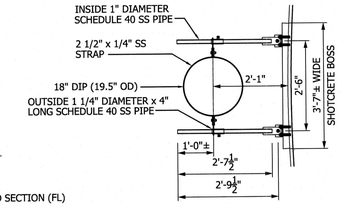

5 / M401 DETAIL - PIPE BRACKET

NO SCALE

NOTES:

1. PLACE SO THAT WALL PIPE IS LEVEL AND WALL FLANGES ARE PLUMB.
2. ALL FLANGES TO COMPLY WITH ANSI/AWWA C115/A21.15 CLASS 125 MIN.
3. ALL PIPE FLANGES TO BE TWO-HOLED.

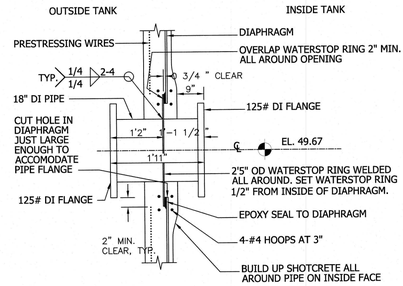

6 / M401 DETAIL - 18" WALL PIPE

NO SCALE

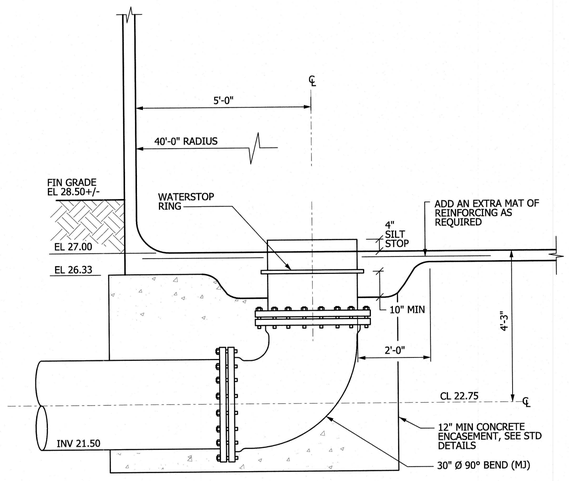

3 / M400 DETAIL - 30" OUTLET PIPE

SCALE: 1/2" = 1'-0"

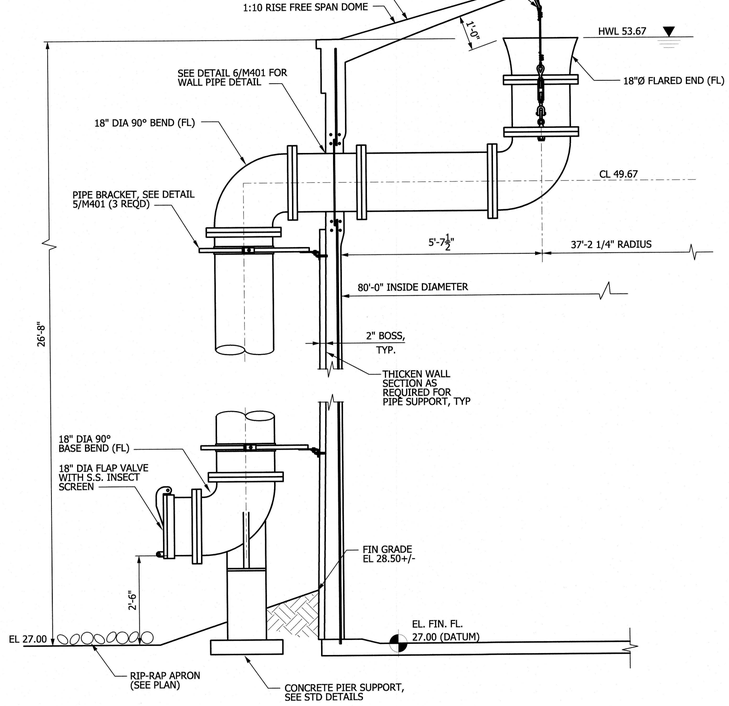

4 / M400 DETAIL - 18" OVERFLOW PIPE

SCALE: 1/2" = 1'-0"

1/2"=1'-0" 12" 0 1' 3'

REVISIONS

THE WOOTEN COMPANY
120 North Boylan Avenue Raleigh, NC 27603-1423
919.828.0531 fax 919.834.3589
License Number: F-0113

BRUNSWICK REGIONAL WATER AND SEWER H2GO
BRUNSWICK COUNTY NORTH CAROLINA
CONTRACT No 4
REVERSE OSMOSIS WATER TREATMENT PLANT
FINISHED WATER STORAGE GROUND TANK
ELEVATION AND DETAILS

NORTH CAROLINA PROFESSIONAL SEAL 040525 ENGINEER CARL W. DAVIS, SCHAFER
7-June-20

NORTH CAROLINA PROFESSIONAL SEAL 4253 ENGINEER CHARLES W. DAVIS
7-JUNE-20

DESIGNED BY: CWD
DRAWN BY: PMD/EML
CHECKED BY: CWD
PROJECT NO.: 3081-AB
DATE: JUNE 7, 2020
SCALE: AS SHOWN

SHEET 80 OF 181

M401

Default
Print2PDFx.plt
5.4 sf:si / in.
pdonaghy
6/4/2020 4:52:15 PM
T:\Projects\BrunswickCo_Regional_W&S_H2GO-3081\AB-Water_Supply&Treatment_Plant\Sheets\WTP\M401_groundSTORAGE2.dgn

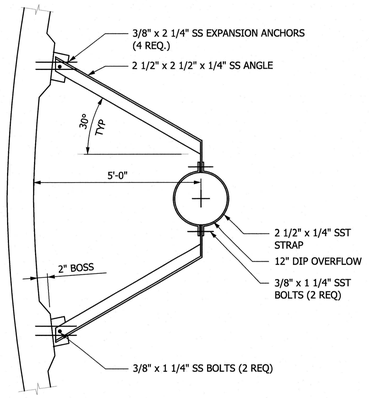

1 M402 DETAIL - PIPE BRACKET

NO SCALE

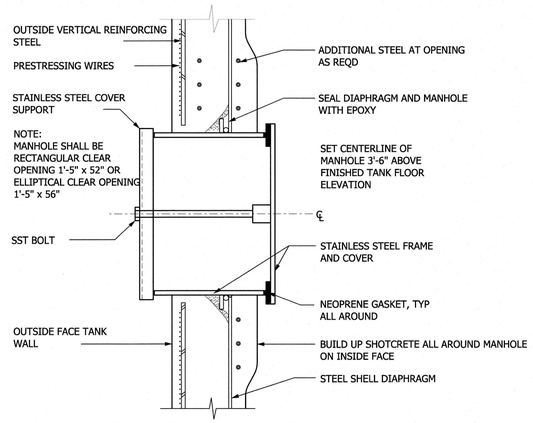

STAINLESS STEEL WALL MANHOLE

2 M402 DETAIL - MANHOLE

NO SCALE

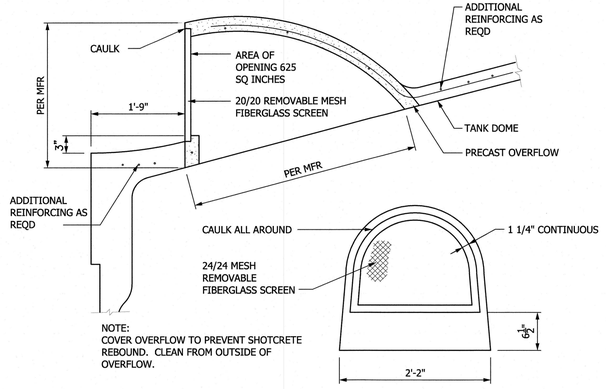

#625 PRECAST CONCRETE OVERFLOW

3 M402 DETAIL - OVERFLOW

NO SCALE

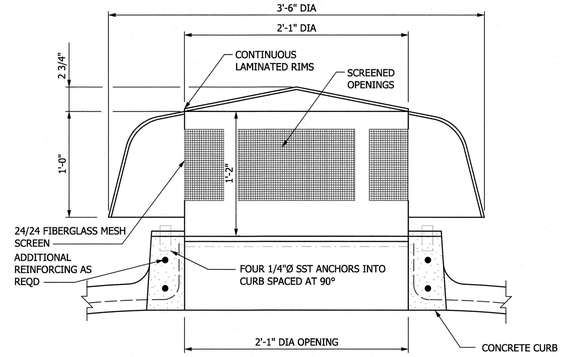

CENTER FIBERGLASS VENTILATOR

4 M402 DETAIL - VENTILATOR

NO SCALE

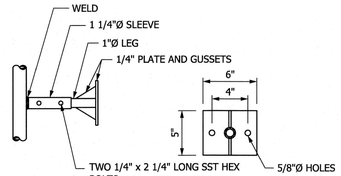

TYPICAL LADDER LEG BRACKET

ADJUST LEG LENGTH AS REQD

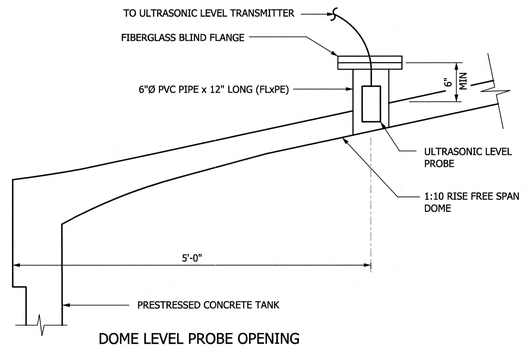

DOME LEVEL PROBE OPENING

6 M402 DETAIL - LEVEL CONTROL

NO SCALE

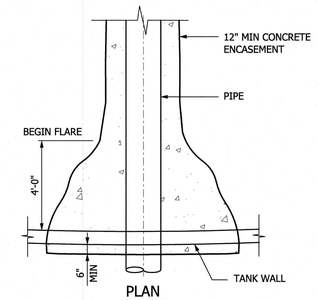

PLAN

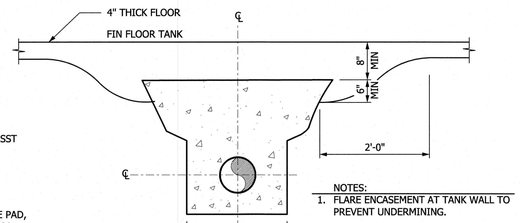

ELEVATION

TYPICAL PIPE ENCASEMENT AT TANK WALL

9 M402 DETAIL - CONCRETE ENCASEMENT

NO SCALE

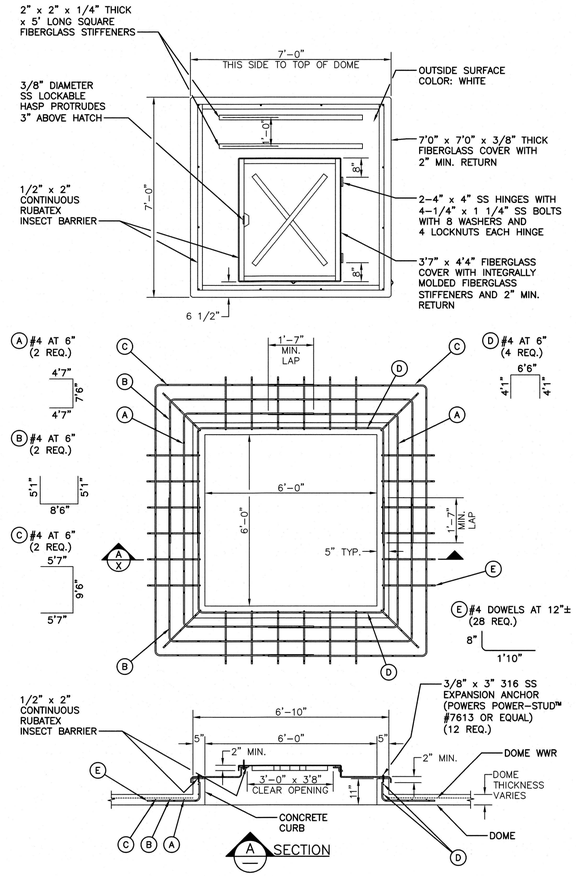

10 M402 DETAIL - ACCESS HATCH WITH FIBERGLASS COVER

NO SCALE

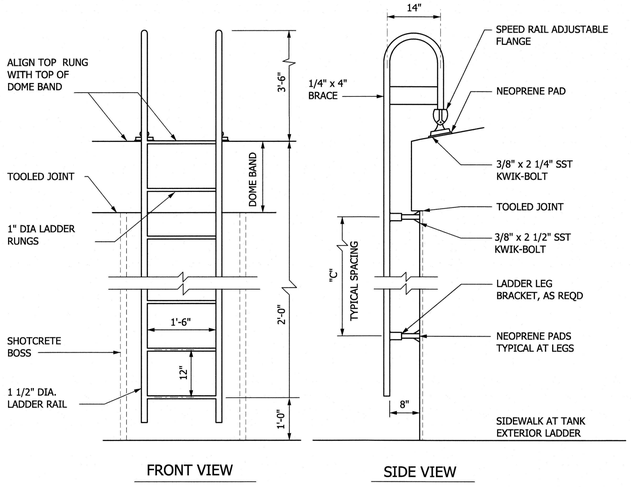

FRONT VIEW SIDE VIEW

NOTES:

1. ALL TUBULAR MATERIAL TO BE NOMINAL DIAMETER SCHEDULE 40 ALUMINUM PIPE 6061-T6.
2. PLATES AND GUSSETS TO BE STRUCTURAL GRADE ALUMINUM 6061-T6.

EXTERIOR ALUMINUM LADDER WITH T-S SAFETY RAIL

7 M402 DETAIL - LADDER

NO SCALE

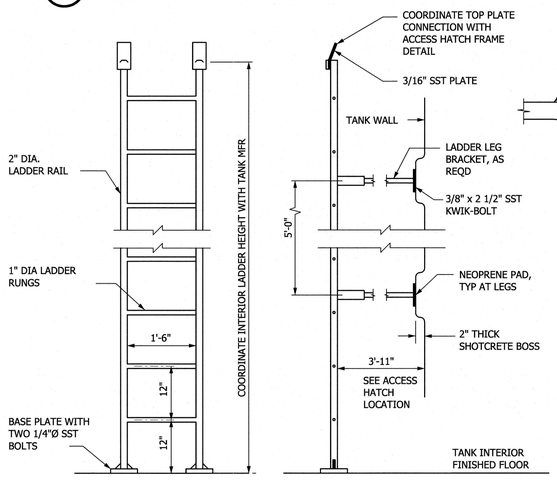

FRONT VIEW SIDE VIEW

NOTES:

1. ALL TUBULAR MATERIAL TO BE NOMINAL DIAMETER SCHEDULE 40 STAINLESS STEEL GRADE 304.
2. PLATES AND GUSSETS TO BE STRUCTURAL GRADE 304 STAINLESS STEEL.

INTERIOR STAINLESS STEEL LADDER WITH T-S SAFETY RAIL

8 M402 DETAIL - LADDER

NO SCALE

REVISIONS

THE WOOTEN COMPANY
120 North Boylan Avenue Raleigh, NC 27603-1423
919.828.0531 Fax 919.834.3369
License Number: F-0115

BRUNSWICK REGIONAL WATER AND SEWER H2GO
BRUNSWICK COUNTY NORTH CAROLINA
CONTRACT No 4
REVERSE OSMOSIS WATER TREATMENT PLANT
FINISHED WATER STORAGE GROUND TANK
TANK ACCESSORIES DETAILS

NORTH CAROLINA PROFESSIONAL SEAL 040529 ENGINEER CHRIS W. SCHAFER 7-June-20

NORTH CAROLINA PROFESSIONAL SEAL 25253 ENGINEER CHARLES W. DAVIS 7-JUNE-20

DESIGNED BY:	CWD
DRAWN BY:	PMD/EML
CHECKED BY:	CWD
PROJECT NO.:	3081-AB
DATE:	JUNE 7, 2020
SCALE:	NO SCALE

SHEET 81 OF 181

M402

Default
Print2PDFx.plt
1:0 xf:si / in.
pdonaghy
6/4/2020 4:52:58 PM
T:\Projects\Brunswick_Regional_W&S_H2GO-3081\AB-Water_Supply&Treatment_Plant\Sheets\WTP\M402_groundSTORAGE3.dgn

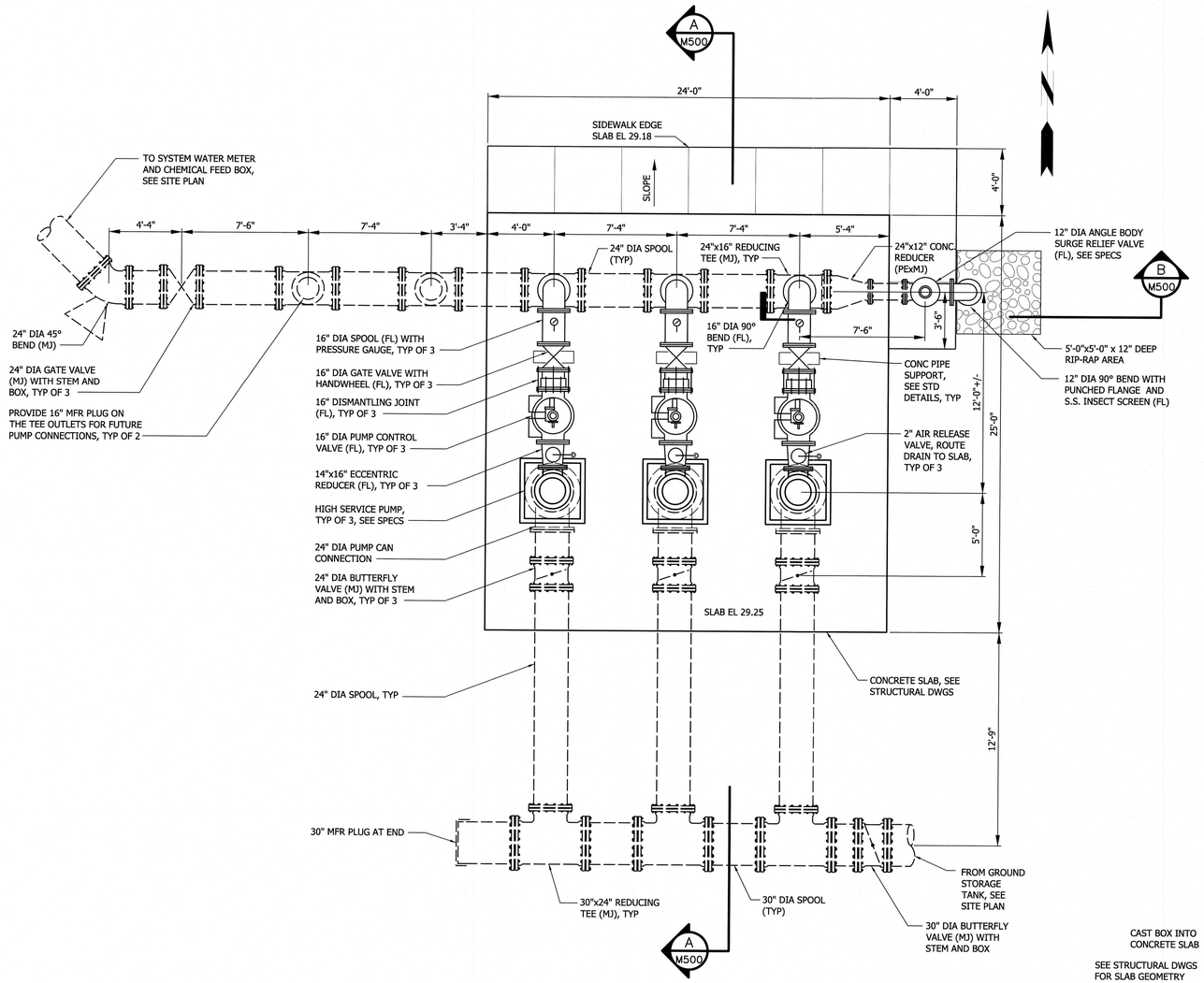

1 M500 PLAN - HIGH SERVICE PUMP STATION

SCALE = 1/4" = 1'-0"

NOTES:

1) SEE SPECIFICATIONS FOR PUMP REQUIREMENTS. CONTRACTOR SHALL NOTIFY ENGINEER OF ANY CHANGES TO PUMP DESIGN AND GEOMETRY PRIOR TO BID.
2) PUMP BASES SHALL BE A MONOLITHIC POUR WITH A MINIMUM 4,000 PSI CONCRETE.
3) ALL BELOW GROUND PIPE FITTINGS SHALL BE MECHANICAL JOINT TYPE FITTINGS AND ABOVE GROUND FITTINGS SHALL BE FLANGED. PROVIDE THRUST BLOCKING ON BELOW GRADE FITTINGS UNLESS NOTED OTHERWISE.
4) ALL EXPOSED PIPING SHALL BE INSULATED PER DETAIL 4/C093.
5) PROVIDE RESTRAINED JOINT PIPE ON BURIED PUMP SUCTION AND DISCHARGE FITTINGS OR THRUST BLOCKING AS SHOWN. SEE STANDARD DETAILS.

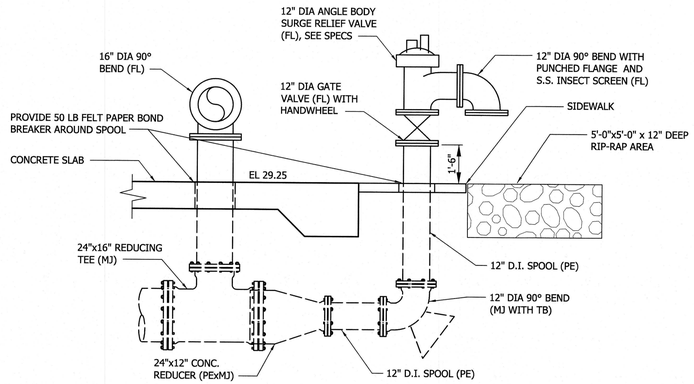

B M500 SECTION- SURGE RELIEF VALVE

SCALE = 3/8" = 1'-0"

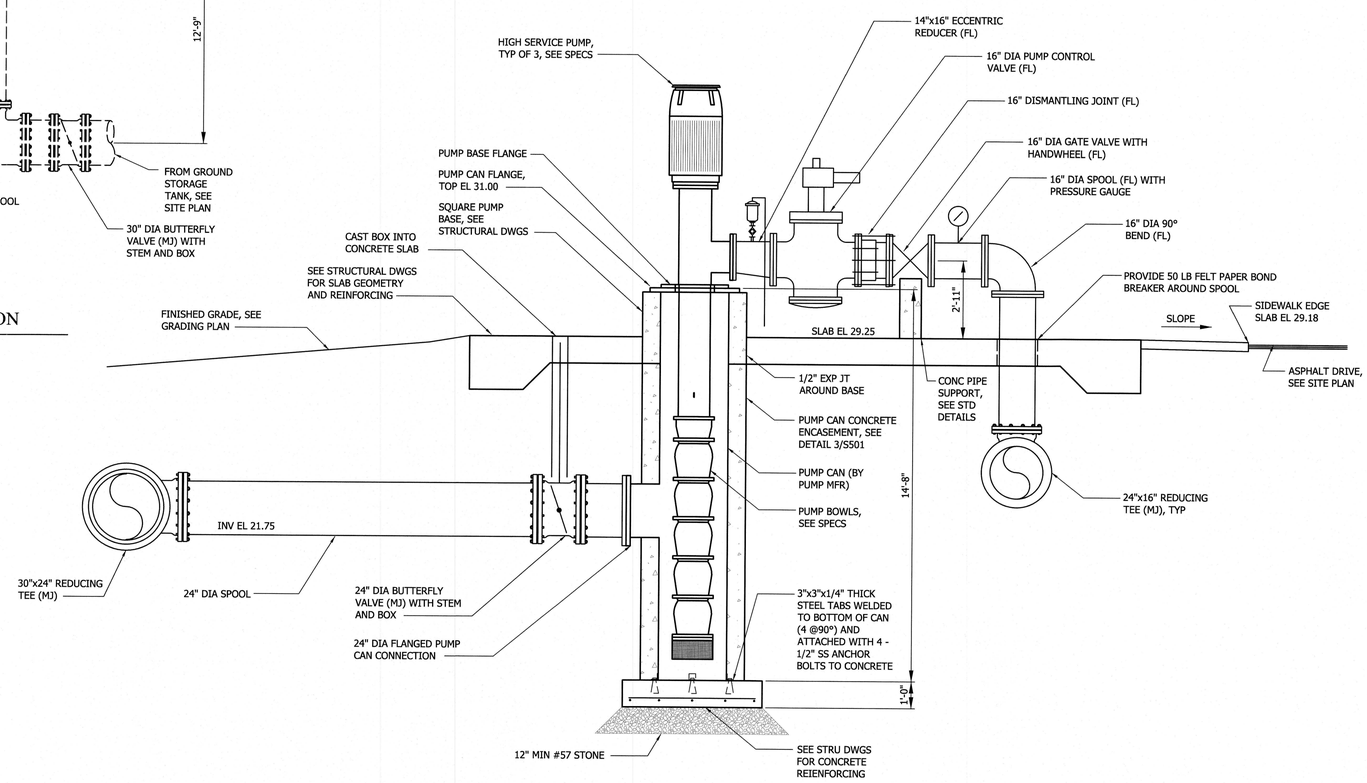

A M500 SECTION- HIGH SERVICE PUMP STATION

SCALE = 3/8" = 1'-0"

3/8"=1'-0" 12" 0 1' 2' 4' 1/4"=1'-0" 2' 1' 0 1' 2' 6'

REVISIONS

THE WOOTEN COMPANY
120 North Boylan Avenue Raleigh, NC 27603-1423
919.828.0531 fax 919.834.3589
License Number: F-0113

BRUNSWICK REGIONAL WATER AND SEWER H2GO
BRUNSWICK COUNTY NORTH CAROLINA
CONTRACT No. 4
REVERSE OSMOSIS WATER TREATMENT PLANT

HIGH SERVICE PUMP STATION
PLAN, SECTION AND DETAIL

NORTH CAROLINA PROFESSIONAL SEAL 040269 ENGINEER KATHERINE MATTHEW FOWLER
7-June-20

NORTH CAROLINA PROFESSIONAL SEAL 025371 ENGINEER CHARLES W. DAVIS
7-JUNE-20

DESIGNED BY: CWD
DRAWN BY: PMD/EML
CHECKED BY: CWD
PROJECT NO.: 3081-AB
DATE: JUNE 7, 2020
SCALE: AS NOTED

SHEET 82 OF 181

M500

Default
Print2PDFx.plt
4.0000 " / in.
pdonaghy
6/4/2020 5:09:26 PM
T:\Projects\Brunswick_Regional_W&S_H2GO-3081\AB-Water_Supply&Treatment_Plant Sheets\WTP\M500-HIGH SERVICE PUMPS.dgn

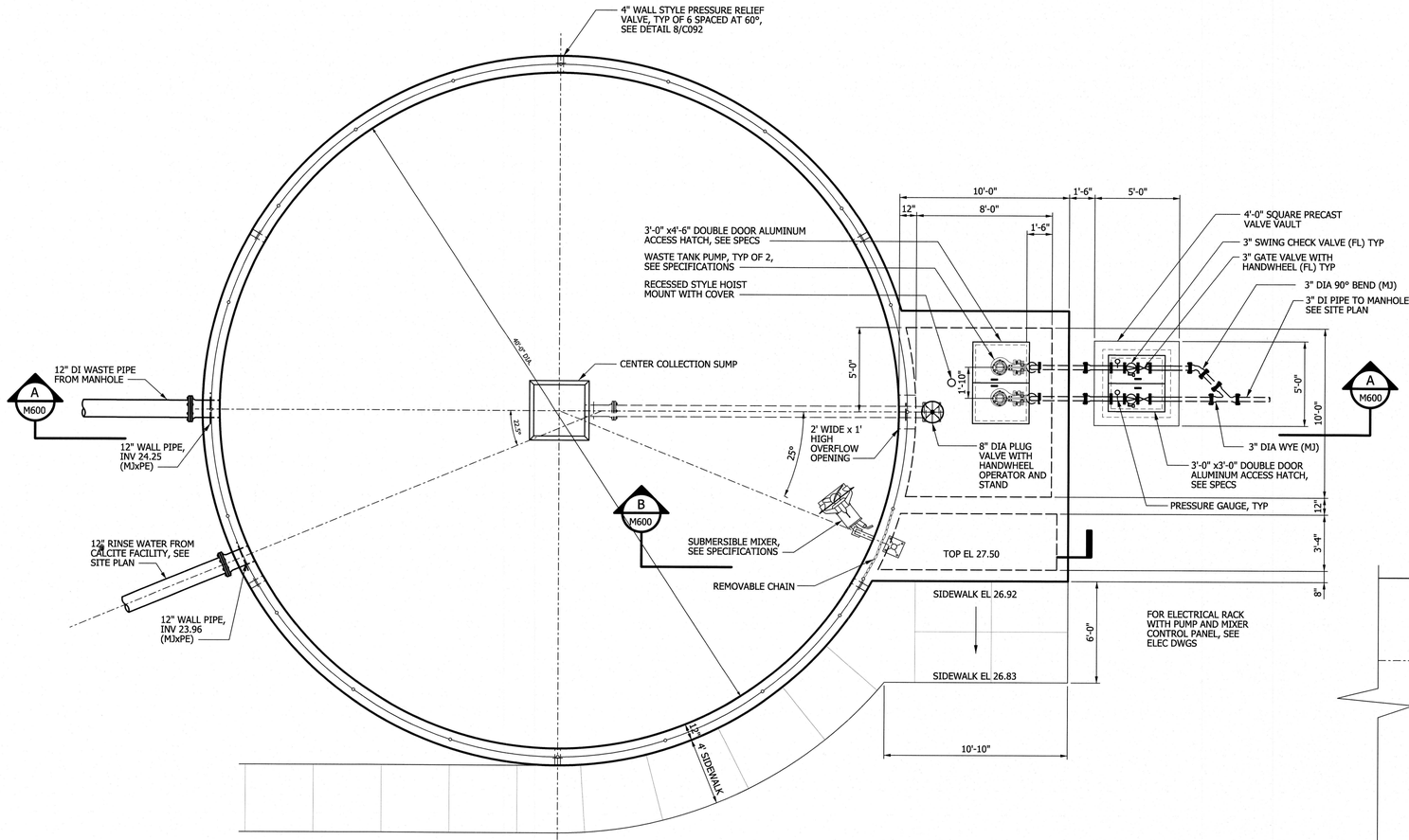

BACKWASH STORAGE TANK

SCALE: 1/4" = 1'-0"

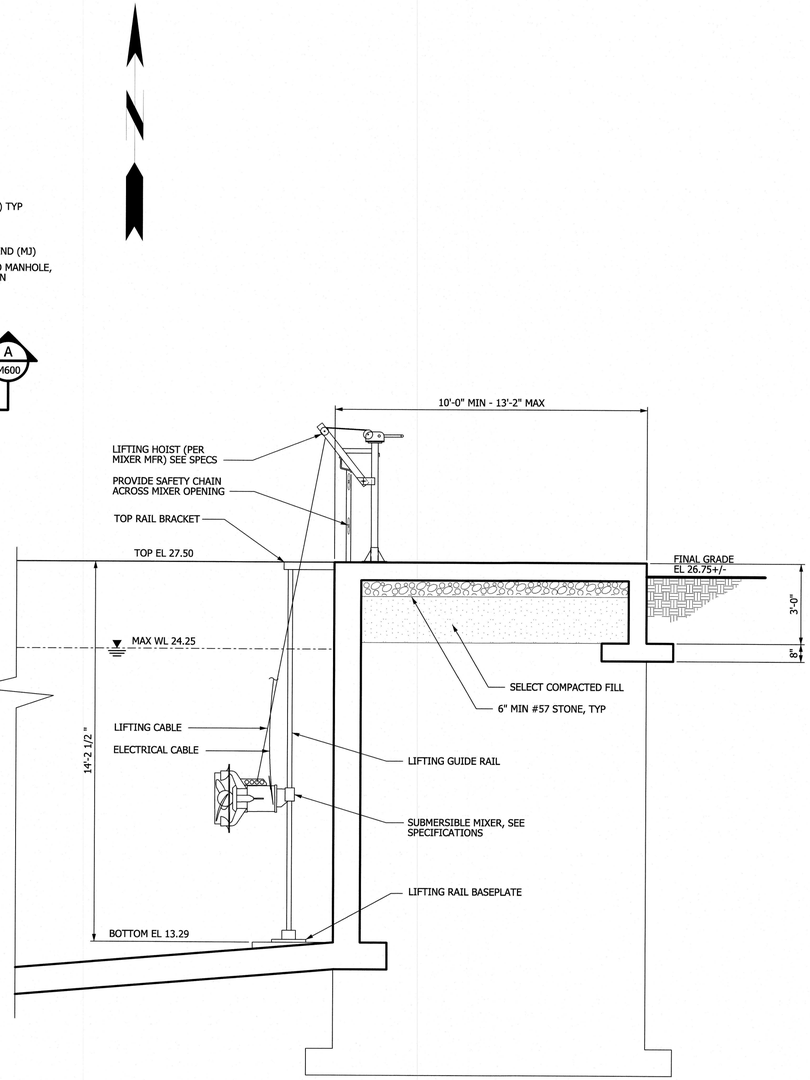

B M600 SECTION-SUBMERSIBLE MIXER

SCALE: 3/8" = 1'-0"

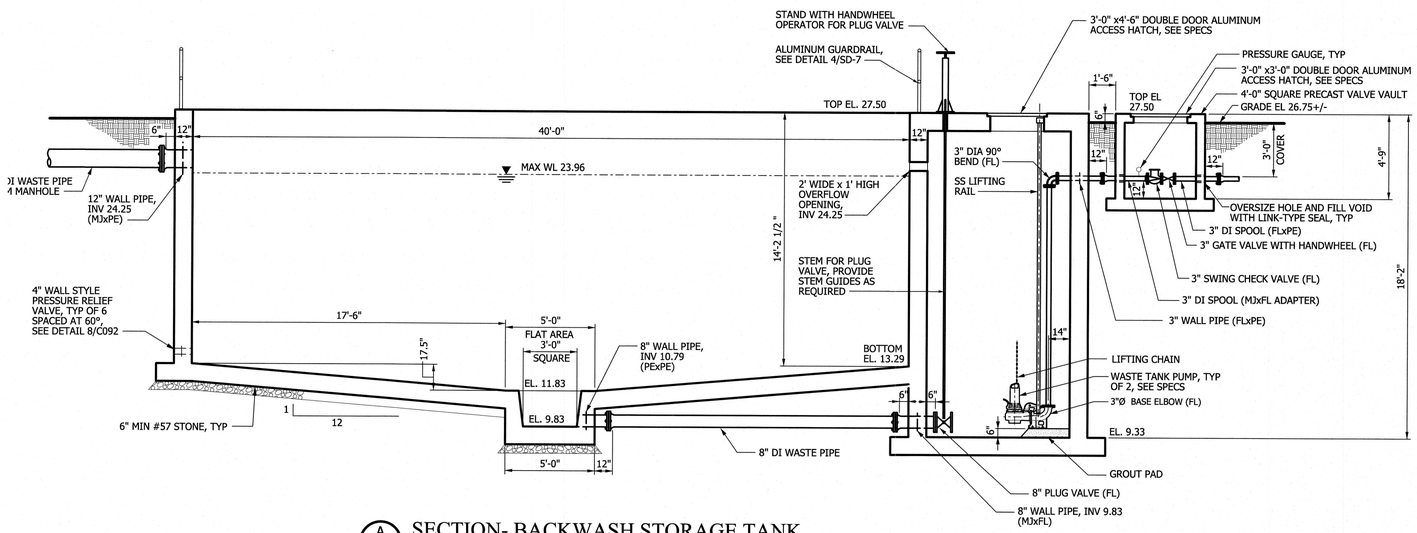

A M600 SECTION- BACKWASH STORAGE TANK

SCALE: 1/4" = 1'-0"

1/4"=1'-0" 2' 1' 0 1' 2' 6'

3/8"=1'-0" 12" 0 1' 2' 4'

REVISIONS

THE WOOTEN COMPANY
120 North Boylan Avenue Raleigh, NC 27603-1423
919.828.0531 fax 919.834.3589
License Number: F-0115

BRUNSWICK REGIONAL WATER AND SEWER H2GO
BRUNSWICK COUNTY NORTH CAROLINA
CONTRACT No. 4
REVERSE OSMOSIS WATER TREATMENT PLANT
NEW BACKWASH STORAGE TANK
TOP PLAN AND DETAILS

NORTH CAROLINA PROFESSIONAL SEAL 040269 ENGINEER K. MATTHEW FORDS 7-June-20

NORTH CAROLINA PROFESSIONAL SEAL 22531 ENGINEER CHARLES W. DAVIS 7-JUNE-20

DESIGNED BY: CWD
DRAWN BY: PMD/EML
CHECKED BY: CWD
PROJECT NO.: 3081-AB
DATE: JUNE 7, 2020
SCALE: AS NOTED

SHEET 83 OF 181

M600

Default
Print2PDFx.plt
4.0 sf:si / in.
pdonaghy
6/4/2020 5:21:00 PM
T:\Projects\Brunswick_Regional_W&S_H2GO-3081\AB-Water_Supply&Treatment_Plant\Sheets\WTP M600-backwash storage.dgn

Default

NOTE

1. INTERIOR DIMENSIONS OF THE VAULT ARE INCLUDED. TOP SLAB, BOTTOM SLAB AND WALL THICKNESS SHALL BE DETERMINED BY THE PRECAST MANUFACTURER FOR THE APPLICATION. SEE SPECIFICATIONS FOR PRECAST CONCRETE.

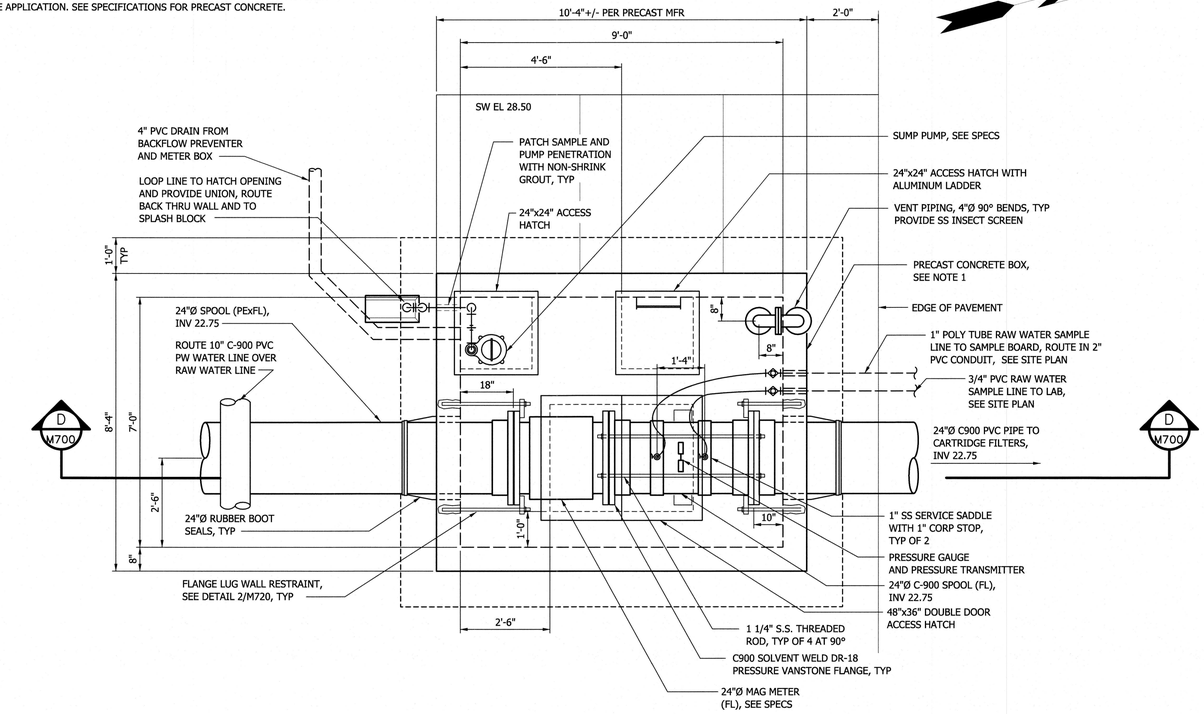

1 M700 DETAIL - RAW WATER METER BOX PLAN

SCALE: 1/2" = 1'-0"

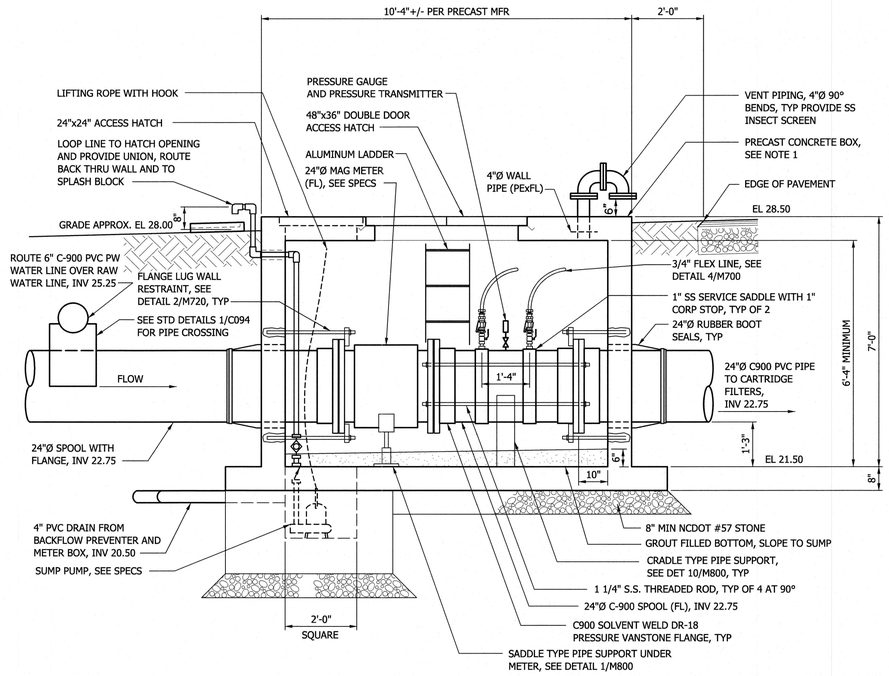

D M700 SECTION - RAW WATER METER BOX

SCALE: 1/2" = 1'-0"

RATED TO 150 PSI

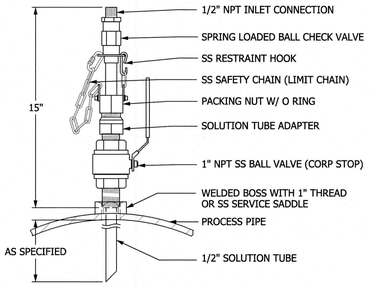

VERTICAL INSTALLATION SHOWN FOR CLARITY. SEE PLANS FOR ACTUAL LOCATION.

COORDINATE WITH MANUFACTURER AND/OR ENGINEER FOR BEST TIP AND LENGTH FOR EACH CHEMICAL AND LOCATION.

3 M700 1" CORPORATION STOP WITH 1/2" SOLUTION TUBE W/ CHECK VALVE

NOT TO SCALE

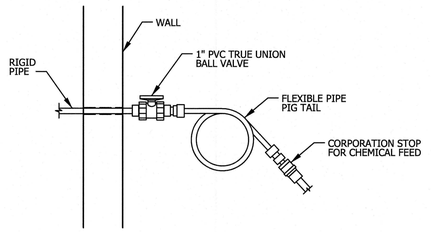

4 M700 FLEXIBLE HOSE ASSEMBLY

NOT TO SCALE

1/2"=1'-0" 12" 0 1' 3'

REVISIONS

THE WOOTEN COMPANY
120 North Boylan Avenue Raleigh, NC 27603-1423
919.828.0531 Fax 919.834.3369
License Number: F-0115

BRUNSWICK REGIONAL WATER AND SEWER H2GO
BRUNSWICK COUNTY NORTH CAROLINA
CONTRACT No. 4
REVERSE OSMOSIS WATER TREATMENT PLANT
FILTER BUILDING
RAW WATER METER AND SAMPLE VAULT

NORTH CAROLINA PROFESSIONAL ENGINEER SEAL 040526 CHARLES W. SCHMIDT 7-JUNE-20

NORTH CAROLINA PROFESSIONAL ENGINEER SEAL 23531 CHARLES W. DAVIS 7-JUNE-20

DESIGNED BY:	CWD
DRAWN BY:	PMD/EML
CHECKED BY:	CWD
PROJECT NO.:	3081-AB
DATE:	JUNE 7, 2020
SCALE:	3/8" = 1'-0"

SHEET 84 OF 181

M700

Print2PDFx.plt
2.0 ".." / in.
pdonaghy
6/4/2020 5:21:43 PM
T:\Projects\Brunswick_Regional_W&S_H2GO-3081\AB-Water_Supply&Treatment_Plant\Sheets\WTP\M700_RAW WATER METER.dgn

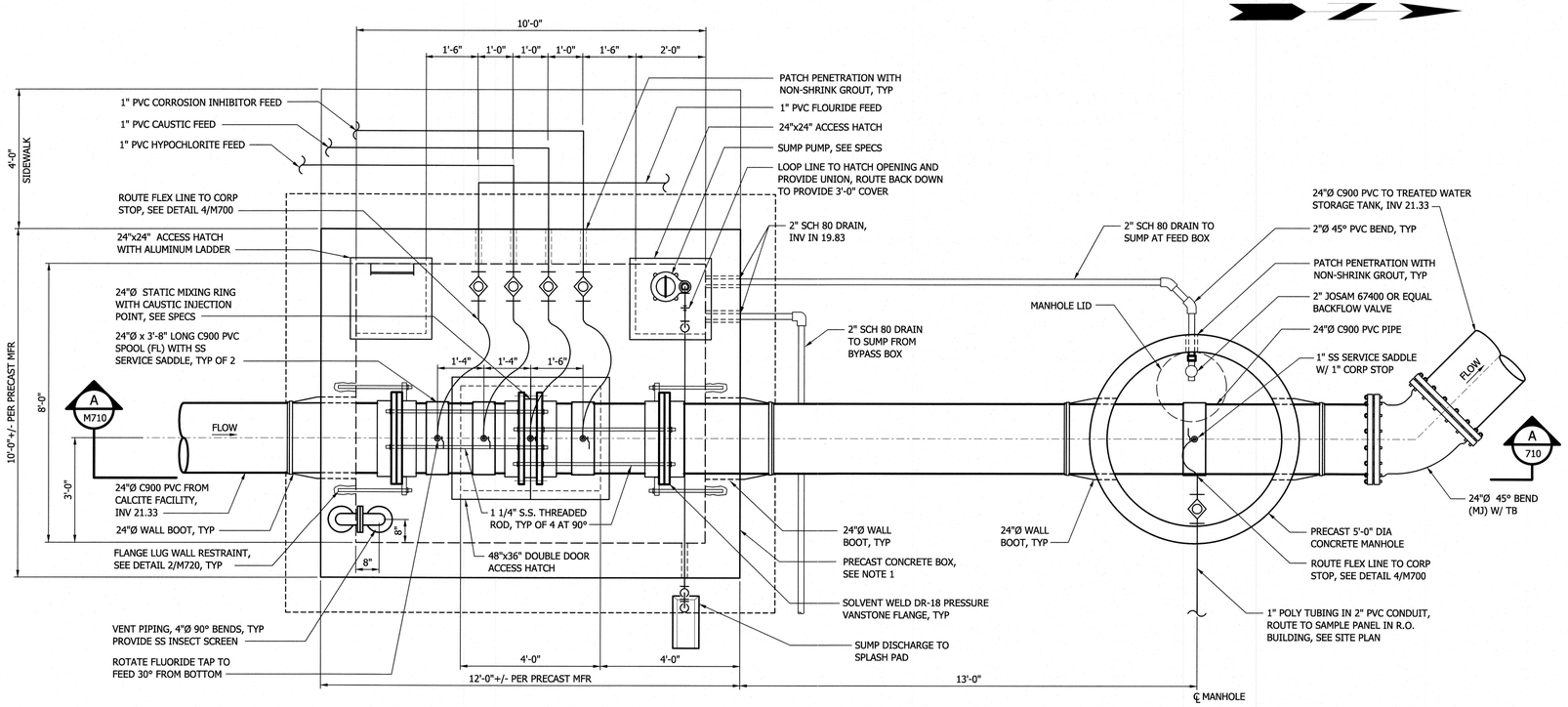

TREATED WATER VAULT PLAN

SCALE: 1/2" = 1'-0"

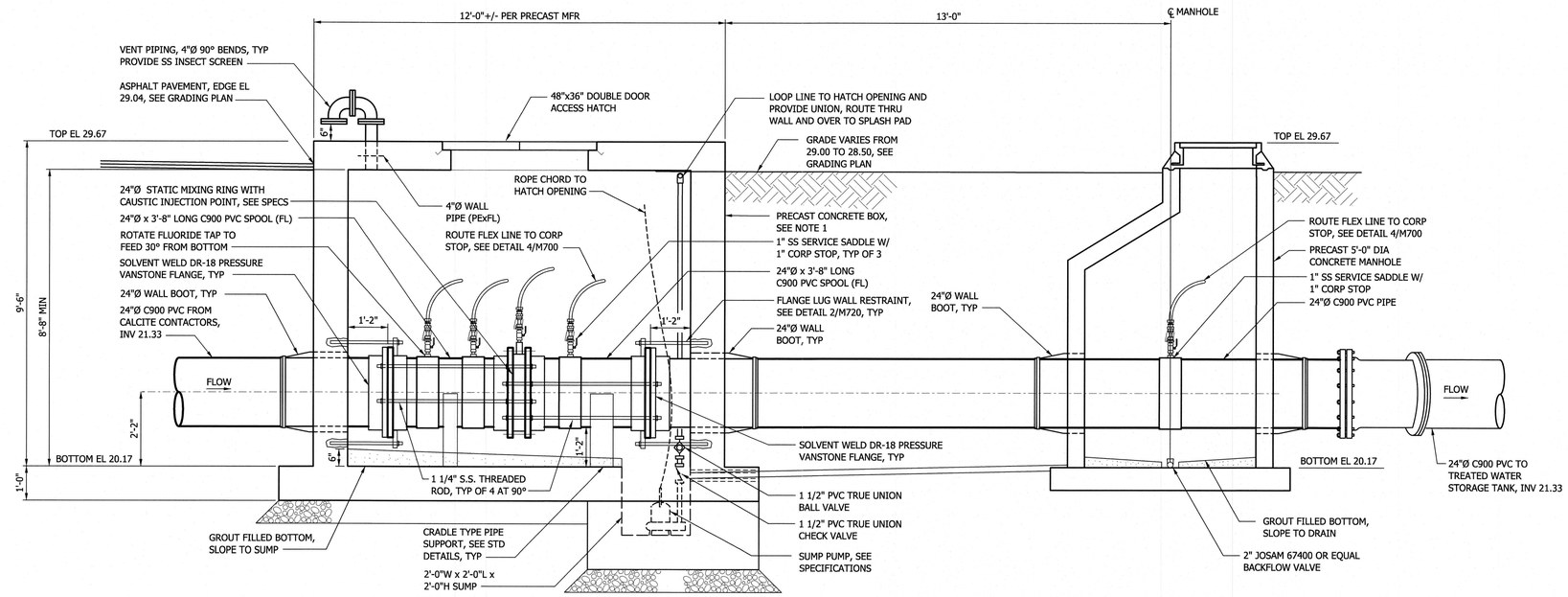

A M710 TREATED WATER METER AND VAULT

SCALE: 1/2" = 1'-0"

1"=1'-0" 1' 6" 0 1' 1/2"=1'-0" 12" 0 1' 3'

NOTE

1. INTERIOR DIMENSIONS OF THE VAULT ARE INCLUDED. TOP SLAB, BOTTOM SLAB AND WALL THICKNESS SHALL BE DETERMINED BY THE PRECAST MANUFACTURER FOR THE APPLICATION. SEE SPECIFICATIONS FOR PRECAST CONCRETE.

REVISIONS

THE WOOTEN COMPANY
120 North Boylan Avenue, Raleigh, NC 27603-1423
919.828.0531 Fax 919.834.3369
License Number: F-0115

BRUNSWICK REGIONAL WATER AND SEWER H2GO
BRUNSWICK COUNTY NORTH CAROLINA

CONTRACT No 4
REVERSE OSMOSIS WATER TREATMENT PLANT

TREATED WATER VAULT
PLAN, SECTION AND DETAILS

NORTH CAROLINA PROFESSIONAL SEAL 040625 ENGINEER CHRISTOPHER W. SCHER 7-June-20

NORTH CAROLINA PROFESSIONAL SEAL 22531 ENGINEER CHARLES W. DAVIS 7-JUNE-20

DESIGNED BY: CWD
DRAWN BY: PMD/EML
CHECKED BY: CWD
PROJECT NO.: 3081-AB
DATE: JUNE 7, 2020
SCALE: 1/2" = 1'-0"

SHEET 85 OF 181

M710

Default
Print2PDFx.plt
2 sf / in.
pdonaghy
6/4/2020 5:22:28 PM
T:\Projects\Brunswick_Regional_W&S_H2CO-3081\AB-Water_Supply&Treatment_Plant\Sheets\WTP\M710_TREATED water Vault.dgn

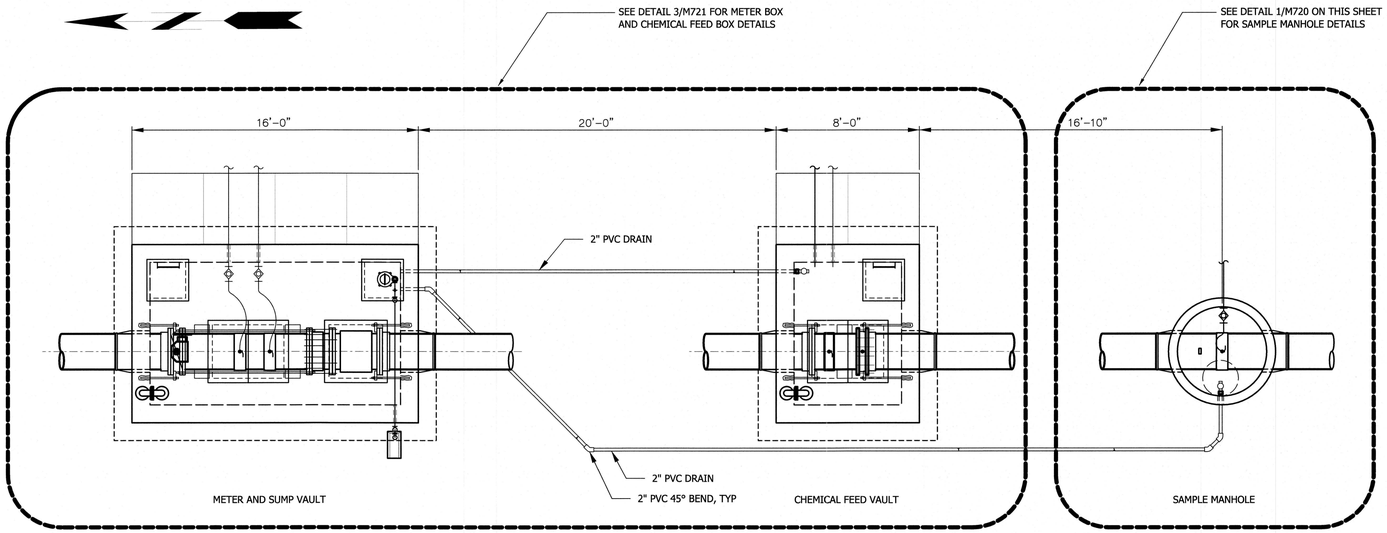

FINISHED WATER METER AND CHEMICAL FEED VAULT PLAN

SCALE: 1/4" = 1'-0"

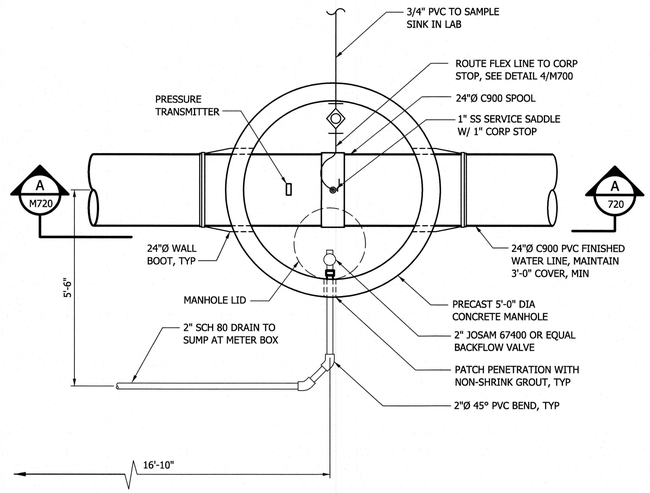

1 M720 SAMPLE MANHOLE PLAN

SCALE: 1/2" = 1'-0"

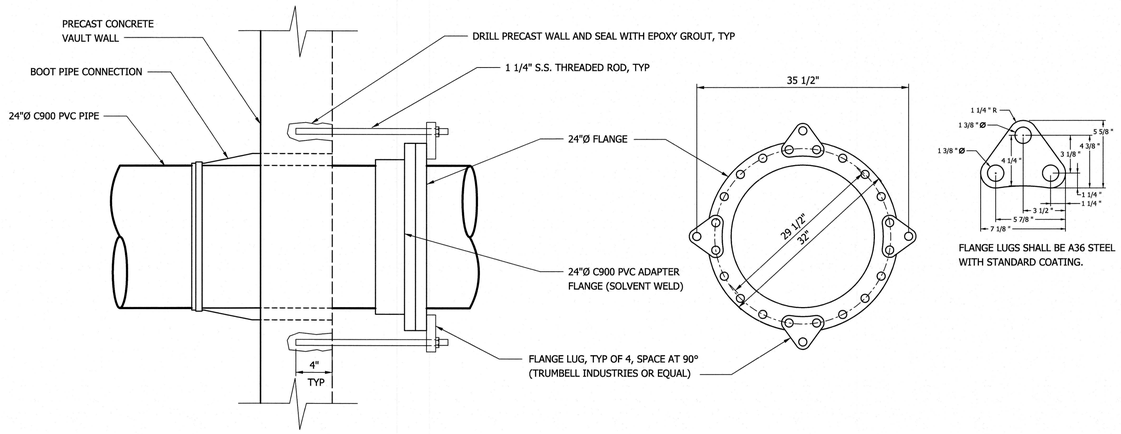

FLANGE LUGS SHALL BE A36 STEEL WITH STANDARD COATING.

2 M720 FLANGE LUG WALL RESTRAINT

SCALE: 1" = 1'-0"

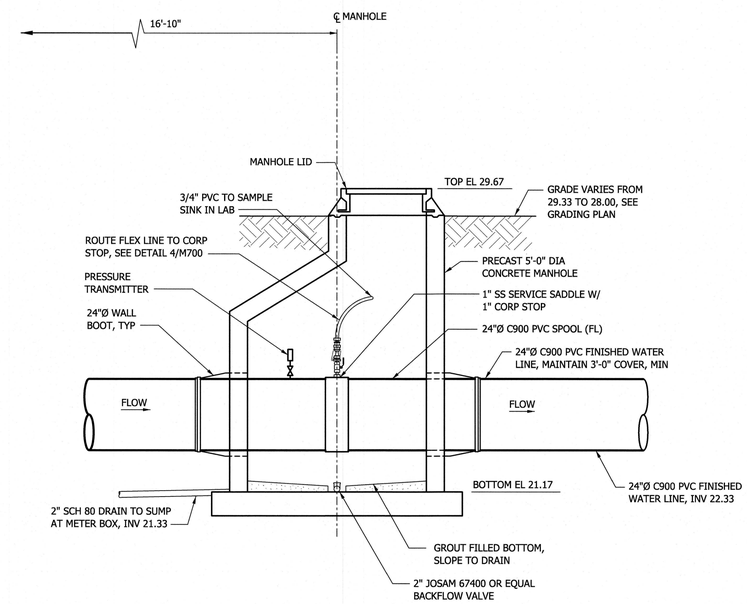

A M720 FINISHED WATER METER AND CHEMICAL FEED VAULT

SCALE: 1/2" = 1'-0"

1/4"=1'-0" 2' 1' 0 1' 2' 6'

1/2"=1'-0" 12" 0 1' 3'

1"=1'-0" 1' 6" 0 1'

REVISIONS

1

THE WOOTEN COMPANY
120 North Boylan Avenue Raleigh NC 27603-1423
919.828.0531 fax 919.834.3589
License Number: F-0115

BRUNSWICK REGIONAL WATER AND SEWER H2GO
BRUNSWICK COUNTY NORTH CAROLINA

CONTRACT No 4
REVERSE OSMOSIS WATER TREATMENT PLANT

FINISHED WATER VAULT
PLANS, SECTION AND DETAILS

NORTH CAROLINA PROFESSIONAL SEAL 040525 ENGINEER CARL W. SCHARPE
17-June-20

NORTH CAROLINA PROFESSIONAL SEAL 22531 ENGINEER CHARLES W. DAVIS
7-June-20

DESIGNED BY:	CWD
DRAWN BY:	PMD/EML
CHECKED BY:	CWD
PROJECT NO.:	3081-AB
DATE:	JUNE 7, 2020
SCALE:	1/2" = 1'-0"

SHEET 86 OF 181

M720

Default

Print2PDFx.plt
4.0000 ' / in.
pdonaghy
6/4/2020 5:23:34 PM
T:\Projects\Brunswick_Regional_W&S_H2GO-3081\AB-Water_Supply&Treatment_Plant\Sheets\WTP\M720_FINISHED water Vault.dgn

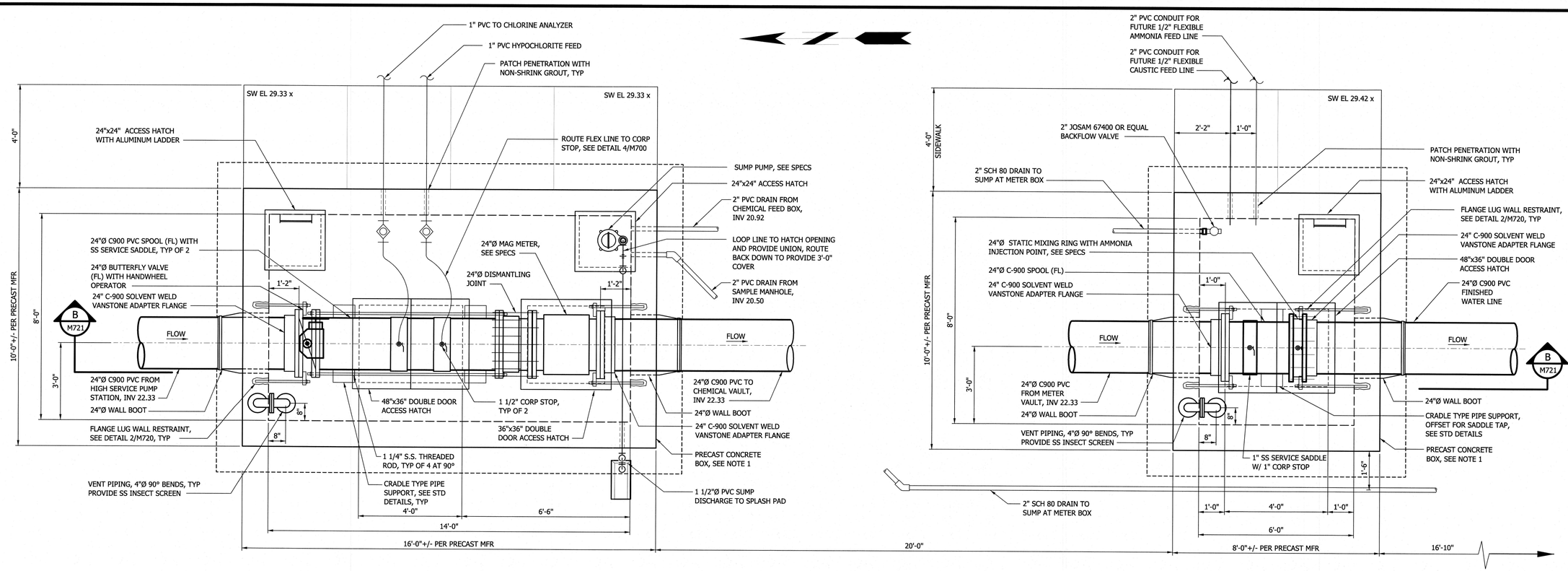

NOTE

1. INTERIOR DIMENSIONS OF THE VAULT ARE INCLUDED. TOP SLAB, BOTTOM SLAB AND WALL THICKNESS SHALL BE DETERMINED BY THE PRECAST MANUFACTURER FOR THE APPLICATION. SEE SPECIFICATIONS FOR PRECAST CONCRETE.

3 M721 FINISHED WATER METER AND CHEMICAL FEED VAULT PLAN

SCALE: 1/2" = 1'-0"

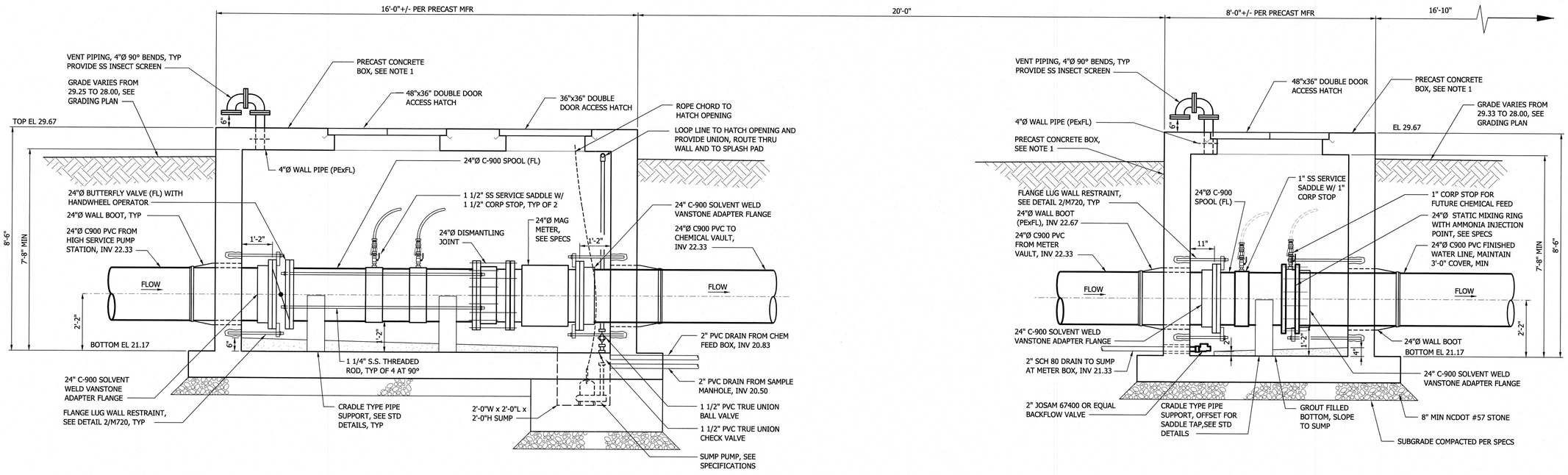

B M721 FINISHED WATER METER AND CHEMICAL FEED VAULT

SCALE: 1/2" = 1'-0"

1"=1'-0" 1' 6" 0 1'

1/2"=1'-0" 12" 0 1' 3'

REVISIONS

THE WOOTEN COMPANY
120 North Boylan Avenue Raleigh NC 27603-1423
919.828.0331 fax 919.834.3589
License Number: F-0115

BRUNSWICK REGIONAL WATER AND SEWER H2GO
BRUNSWICK COUNTY NORTH CAROLINA
CONTRACT No 4
REVERSE OSMOSIS WATER TREATMENT PLANT

FINISHED WATER VAULT
PLAN, SECTION AND DETAILS

NORTH CAROLINA PROFESSIONAL SEAL 040925 ENGINEER CHRIS W. SCHAFER
7-1-20

NORTH CAROLINA PROFESSIONAL SEAL 22531 ENGINEER CHARLES W. DAVIS
7-1-20

DESIGNED BY: CWD
DRAWN BY: PMD/EML
CHECKED BY: CWD
PROJECT NO.: 3081-AB
DATE: JUNE 7, 2020
SCALE: 1/2" = 1'-0"

SHEET 87 OF 181

M721

Default
Print2PDFx.plt
2.0000 " / in.
pdonaghy
6/4/2020 5:24:44 PM
T:\Projects\Brunswick_Regional_W&S_H2GO-3081\AB-Water_Supply\6Treatment_Plant\Sheets\WTP\M721_FINISHED water Vault.dgn

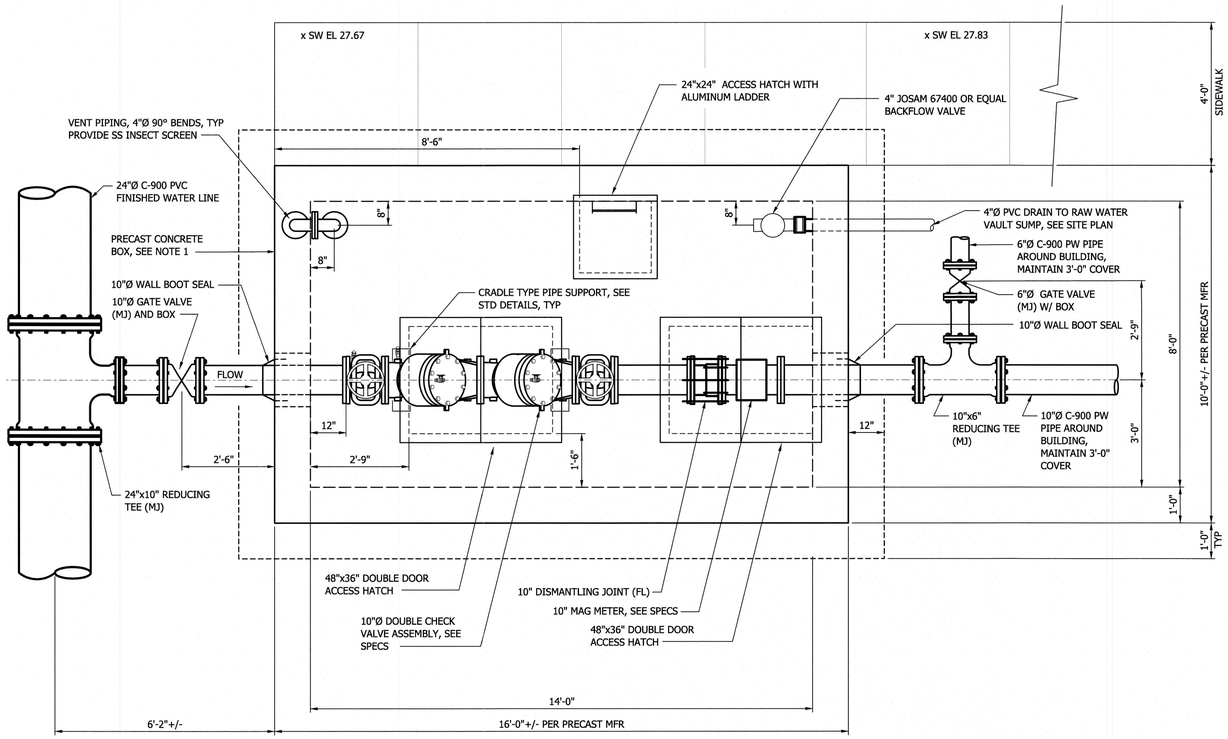

BACKFLOW PREVENTER VAULT PLAN

SCALE: 1/2" = 1'-0"

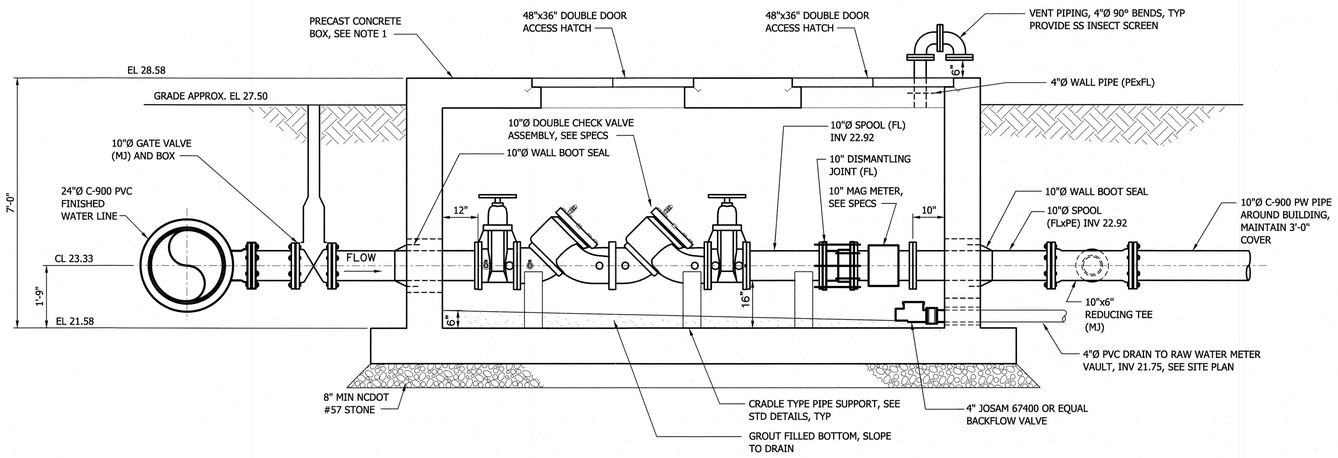

A BACKFLOW PREVENTER

M730 SCALE: 1/2" = 1'-0"

1"=1'-0" 1' 6" 0 1'

1/2"=1'-0" 12" 0 1' 3'

NOTE

1. INTERIOR DIMENSIONS OF THE VAULT ARE INCLUDED. TOP SLAB, BOTTOM SLAB AND WALL THICKNESS SHALL BE DETERMINED BY THE PRECAST MANUFACTURER FOR THE APPLICATION. SEE SPECIFICATIONS FOR PRECAST CONCRETE.

REVISIONS

THE WOOTEN COMPANY
120 North Boylan Avenue Raleigh NC 27603-1423
919.828.0531 fax 919.834.3369
License Number: F-0115

BRUNSWICK REGIONAL WATER AND SEWER H2GO
BRUNSWICK COUNTY NORTH CAROLINA

CONTRACT No 4
REVERSE OSMOSIS WATER TREATMENT PLANT

BACKFLOW PREVENTER VAULT
PLAN, SECTION AND DETAILS

NORTH CAROLINA PROFESSIONAL SEAL 040525 ENGINEER CARL W. SCHAFER
7-June-20

NORTH CAROLINA PROFESSIONAL SEAL 22521 ENGINEER CHARLES W. DAVIS
7-June-20

DESIGNED BY: CWD
DRAWN BY: PMD/EML
CHECKED BY: CWD
PROJECT NO.: 3081-AB
DATE: JUNE 7, 2020
SCALE: 1/2" = 1'-0"

SHEET 88 OF 181

M730

Default
Print2PDFx.plt
2.0000 ' / in.
pdonaghy
6/4/2020 5:25:29 PM
T:\Projects\Brunswick_Regional_W&S_H2GO-3081\AB-Water_Supply&Treatment_Plant\Sheets\WTP\M730_BACKFLOW PREVENTOR.dgn

Default

NOTE

1. INTERIOR DIMENSIONS OF THE VAULT ARE INCLUDED. TOP SLAB, BOTTOM SLAB AND WALL THICKNESS SHALL BE DETERMINED BY THE PRECAST MANUFACTURER FOR THE APPLICATION. SEE SPECIFICATIONS FOR PRECAST CONCRETE.

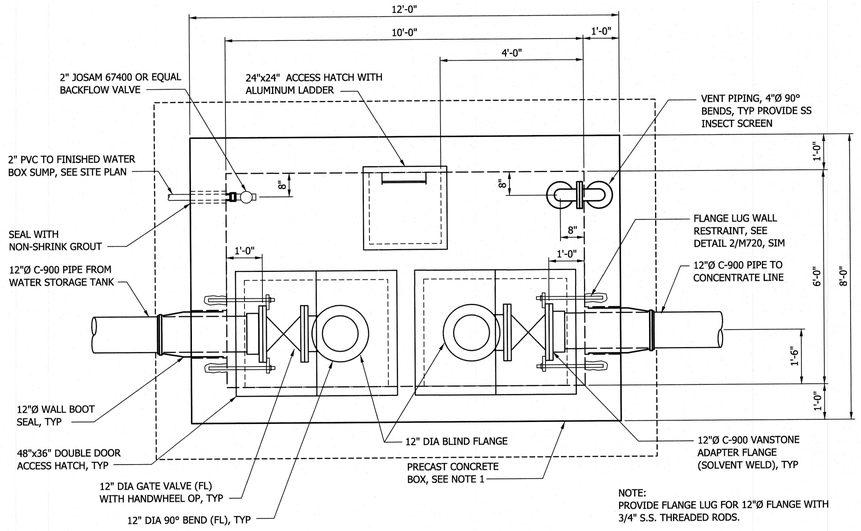

BYPASS VAULT PLAN

SCALE: 1/2" = 1'-0"

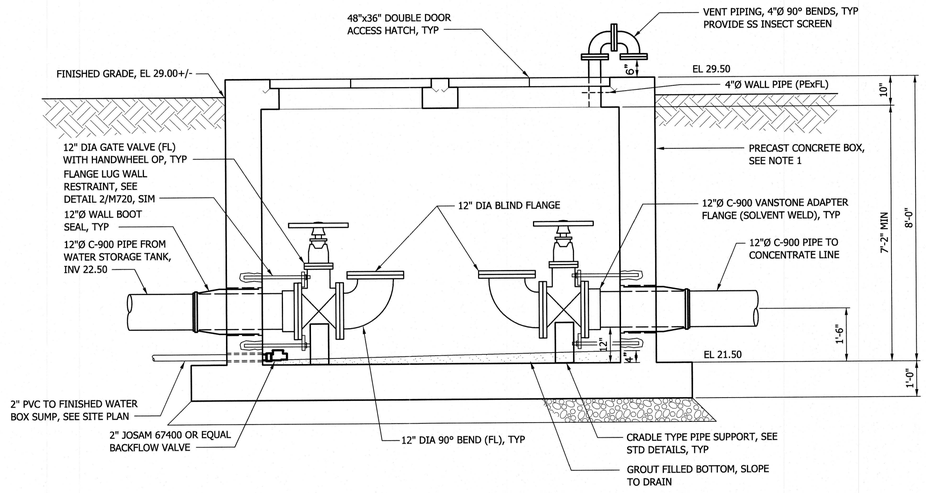

A M720 BYPASS VAULT

SCALE: 1/2" = 1'-0"

1"=1'-0" 1' 6" 0 1' 1/2"=1'-0" 12" 0 1' 3'

REVISIONS

THE WOOTEN COMPANY
120 North Boylan Avenue Raleigh NC 27603-1423
919.828.0531 fax 919.834.3589
License Number: F-0115

BRUNSWICK REGIONAL WATER AND SEWER H2GO
BRUNSWICK COUNTY NORTH CAROLINA

CONTRACT No 4
REVERSE OSMOSIS WATER TREATMENT PLANT

BYPASS VAULT
PLAN, SECTION AND DETAILS

NORTH CAROLINA PROFESSIONAL SEAL 040525 ENGINEER CARY W. SCHAFER 17-June-20

NORTH CAROLINA PROFESSIONAL SEAL 12531 ENGINEER CHARLES W. DAVIS 17-JUNE-20

DESIGNED BY: CWD
DRAWN BY: PMD/EML
CHECKED BY: CWD
PROJECT NO.: 3081-AB
DATE: JUNE 7, 2020
SCALE: 1/2" = 1'-0"

SHEET 89 OF 181

M740

Print2PDFx.plt
2.0000 / in.
pdonaghy
5:26:03 PM
6/4/2020
T:\Projects\Brunswick_Regional_W&S_H2GO-3081\AB-Water_Supply&Treatment_Plant\Sheets\WTP\M740_BYPASS.dgn

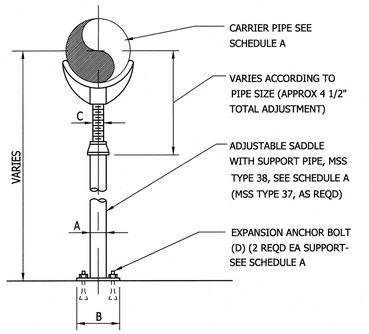

SINGLE PIPE

ADJUSTABLE SADDLE SCHEDULE A ADJUSTABLE SADDLE (DIM IN INCHES)				
PIPE SIZE	A	B	C	D DIA x LG
3	2 1/2	7	1 1/2	5/8 x 5
4-12	3	7 1/2	2 1/2	5/8 x 5
14-16	4	9	3	5/8 x 5
18-20	6	11	3 1/2	3/4 x 6
24-36	6	11	4	3/4 x 6

1 M800 PIPE SUPPORTS
NO SCALE

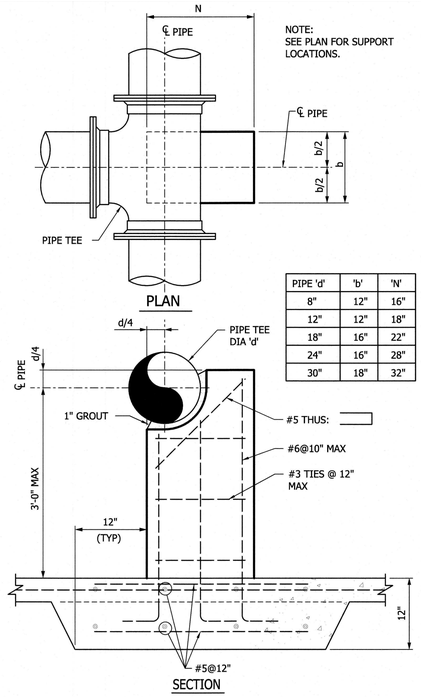

PIPE 'd'	'b'	'N'
8"	12"	16"
12"	12"	18"
18"	16"	22"
24"	16"	28"
30"	18"	32"

2 M800 PIPE THRUST BLOCK SUPPORT
NO SCALE

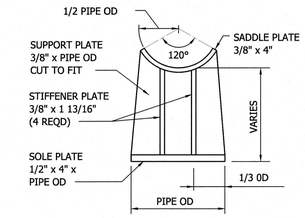

3 M800 FABRICATED PIPE SUPPORT
NO SCALE

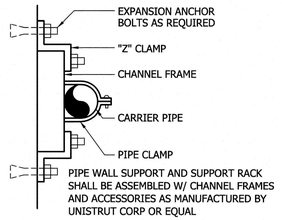

4 M800 PIPE WALL SUPPORT
NO SCALE

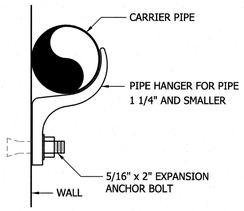

5 M800 WALL HANGER PIPE SUPPORT
NO SCALE

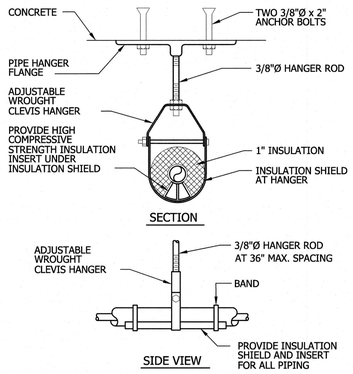

6 M800 PIPE TOP HANGER SUPPORT
NO SCALE

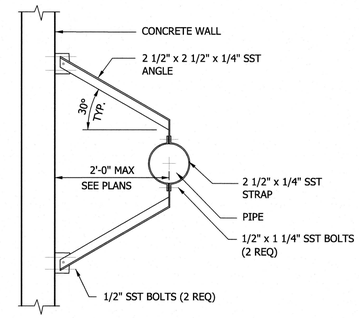

7 M800 PIPE WALL SUPPORT BRACKET
NO SCALE

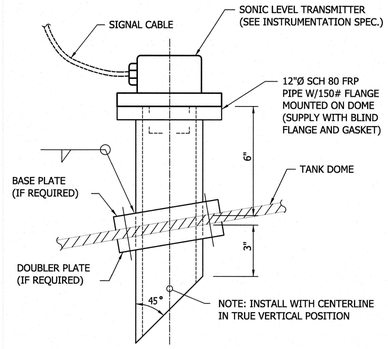

8 M800 TANK MOUNTED LIQUID LEVEL SONIC TRANSMITTER
NOT TO SCALE

REVISIONS

THE WOOTEN COMPANY
120 North Boylan Avenue Raleigh, NC 27603-1423
919.828.0531 Fax 919.834.3369
License Number: F-0115

BRUNSWICK REGIONAL WATER AND SEWER H2GO
BRUNSWICK COUNTY NORTH CAROLINA
CONTRACT No 4
REVERSE OSMOSIS WATER TREATMENT PLANT
STANDARD DETAILS
MECHANICAL PIPING

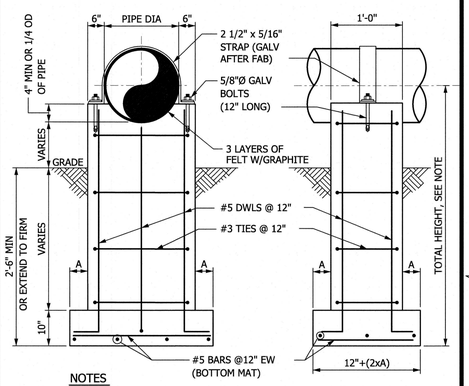

NOTES
DIMENSION "A"=4" FOR HEIGHT UP TO 6'-0"
DIMENSION "A"=8" FOR HEIGHT 6'-0" TO 12'-0"

DO NOT USE FOR HEIGHT OVER 12'-0", SEE STRUCTURAL DWGS.

9 M800 PIPE SUPPORT - CONCRETE PIER
NO SCALE

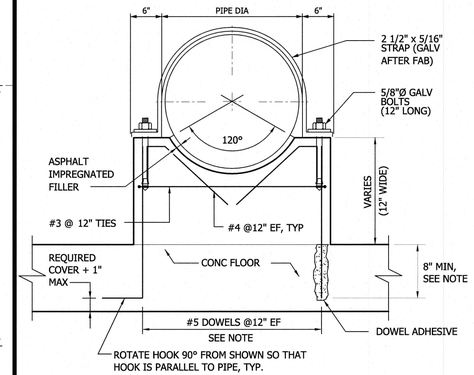

ROTATE HOOK 90° FROM SHOWN SO THAT HOOK IS PARALLEL TO PIPE, TYP.

NOTES:
1. DOWELS MAY BE CAST IN WITH 90□HOOK OR ANCHORED WITH DOWEL ADHESIVE AT CONTRACTORS OPTION. WHERE FLOOR IS 8" THICK OR LESS, USE #4 DOWELS EMBEDDED TO WITHIN 2" OF BOTTOM OF FLOOR SLAB.
2. PROVIDE SS STRAP FOR OUTDOOR LOCATIONS.

10 M800 CRADLE PIPE SUPPORT
NOT TO SCALE

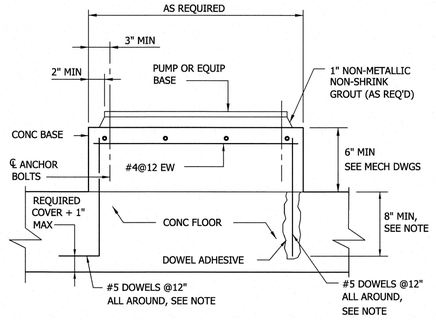

NOTE: DOWELS MAY BE CAST IN WITH 90° HOOK OR ANCHORED WITH DOWEL ADHESIVE AT CONTRACTORS OPTION. WHERE FLOOR IS 8" THICK OR LESS, USE #4 DOWELS EMBEDDED TO WITHIN 2" OF BOTTOM OF FLOOR SLAB.

11 M800 TYPICAL EQUIPMENT BASE
NOT TO SCALE

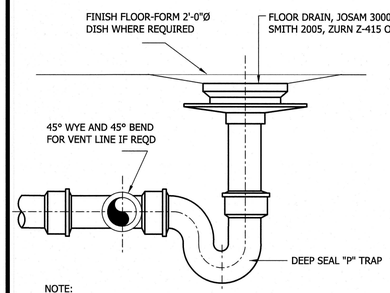

NOTE:
INTERIOR FLOOR DRAIN AND CLEANOUTS TO HAVE NICKEL BRONZE TOPS. EXTERIOR FLOOR DRAINS AND CLEANOUTS TO HAVE LACQUERED CAST IRON TOPS.

12 M800 FLOOR DRAIN
NOT TO SCALE

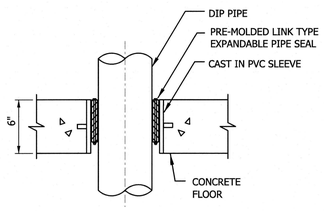

13 M800 CAST-IN-PLACE SLAB PIPE PENETRATION
NO SCALE

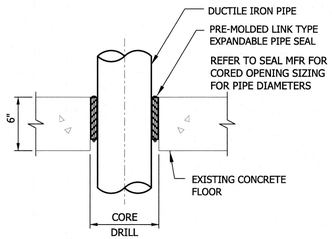

14 M800 EXISTING SLAB PIPE PENETRATION
NO SCALE

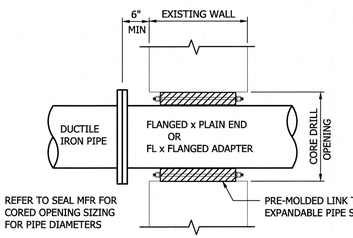

15 M800 PIPE PENETRATION EXISTING WALL
NO SCALE

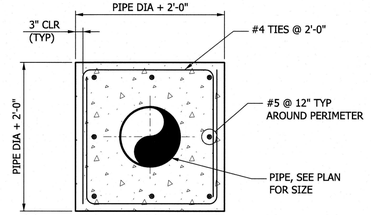

16 M800 PIPE CONCRETE ENCASEMENT
NO SCALE

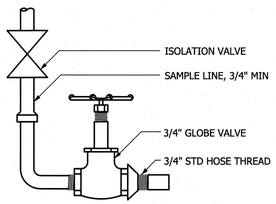

17 M800 SAMPLE TAP
NOT TO SCALE

NORTH CAROLINA PROFESSIONAL SEAL 12531 ENGINEER CHARLES W. DAVIS
7-JUNE-20

DESIGNED BY: CWD
DRAWN BY: PMD/EML
CHECKED BY: CWD
PROJECT NO.: 3081-AB
DATE: JUNE 7, 2020
SCALE: AS NOTED

SHEET 90 OF 181

M800

Default

Print2PDFx.plt
1.0 " = 1 in.
pdonaghy
6/4/2020 5:27:15 PM
T:\Projects\BrunswickRegional_W&S_H2GO-3081\AB-Water_Supply&Treatment_Plant\Sheets\WTP\M800_MECH.dgn

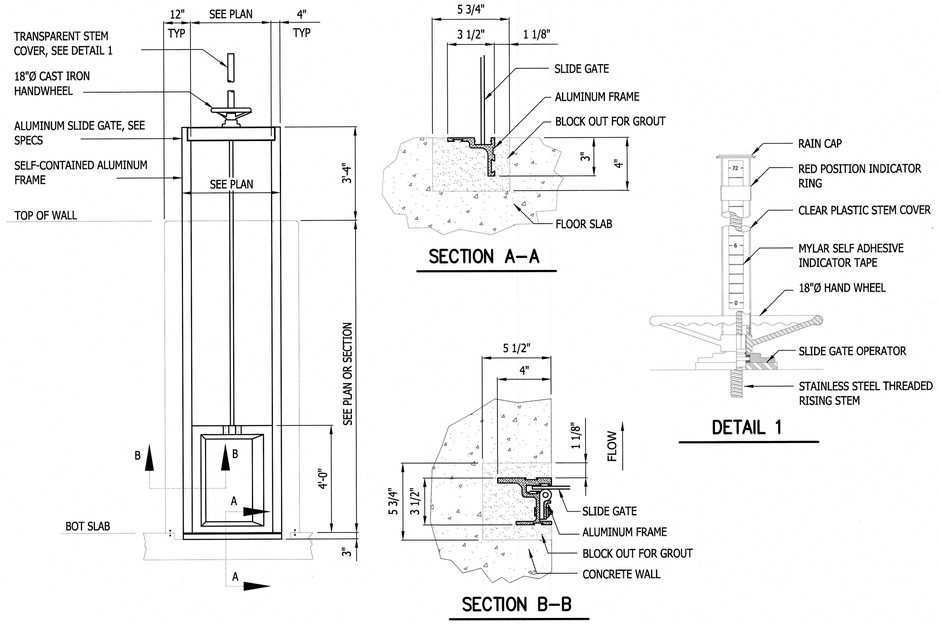

1 M801 DETAIL - SLIDE GATE (CAST-IN-PLACE FRAME)
SCALE: 3/8" = 1'-0"

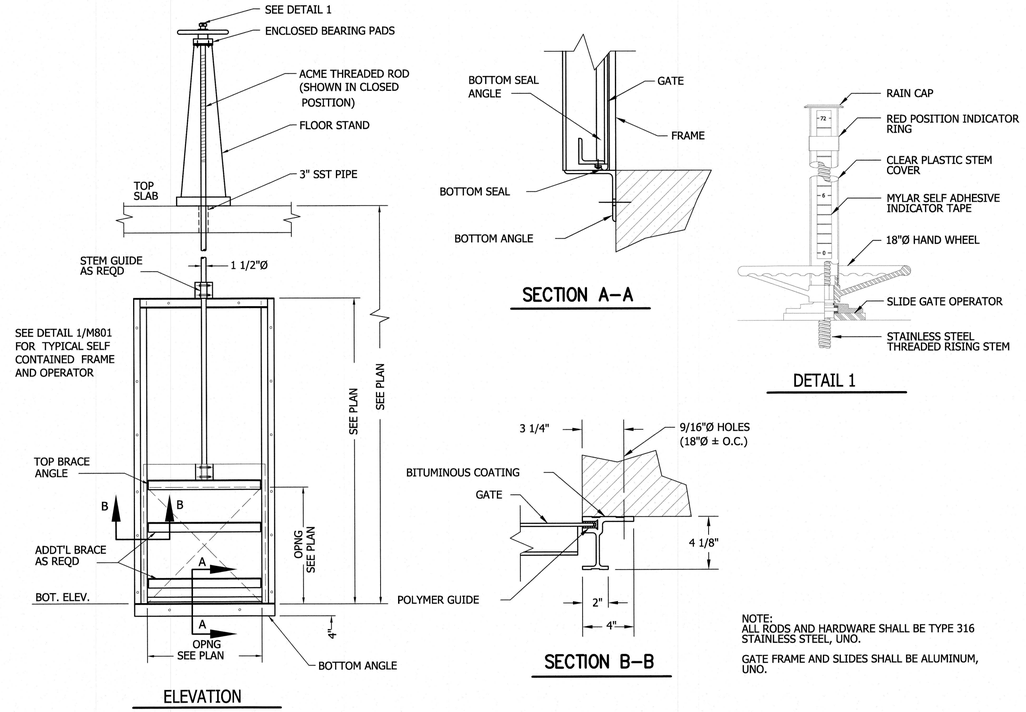

NOTE:
ALL RODS AND HARDWARE SHALL BE TYPE 316 STAINLESS STEEL, UNO.

GATE FRAME AND SLIDES SHALL BE ALUMINUM, UNO.

2 M801 DETAIL - SLIDE GATE - (SURFACE MOUNT FRAME)
SCALE: 3/8" = 1'-0"

SPAN, S	DEPTH (MIN)	CONCRETE ANCHOR (SIZE AND SPACING)
0'-0"<S≤4'-0"	1 1/2"	1/2"Øx5 1/2" @ 18"
4'-0"<S≤5'-0"	1 3/4"	5/8"Øx6" @ 18"
5'-0"<S≤5'-6"	2"	
5'-6"<S≤6'-0"	2 1/4"	
6'-0"<S≤6'-6"	2 1/2"	

SCHEDULE BASED ON 150 PSF

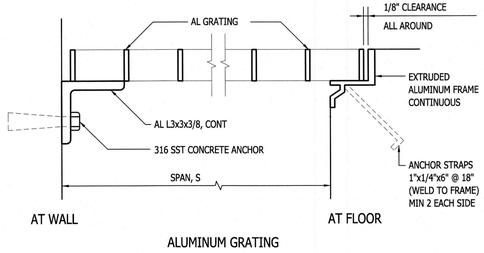

3 M801 DETAIL - ALUMINUM GRATING
NO SCALE

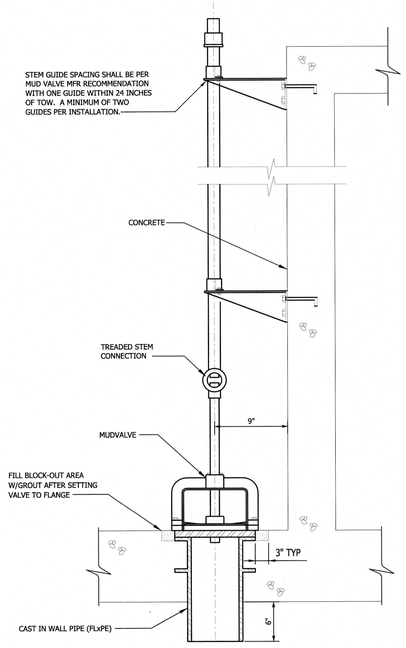

5 M801 DETAIL - MUD VALVE
NO SCALE

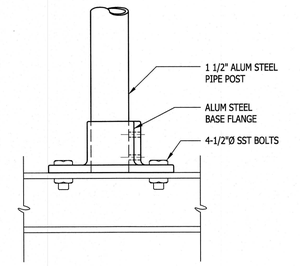

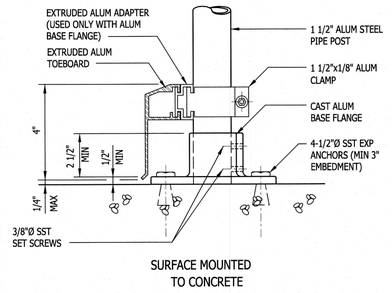

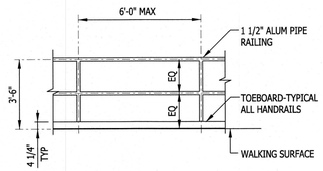

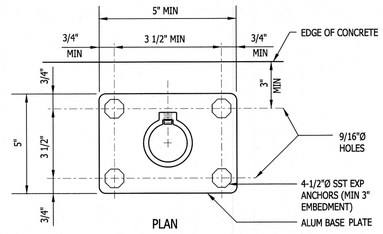

4 M801 DETAIL - ALUMINUM GUARDRAIL
NO SCALE

REVISIONS

THE WOOTEN COMPANY
120 North Boylan Avenue Raleigh NC 27603-1423
919.828.0531 Fax 919.834.3589
License Number: F-0115

BRUNSWICK REGIONAL WATER AND SEWER H2GO
BRUNSWICK COUNTY NORTH CAROLINA
CONTRACT No 4
REVERSE OSMOSIS WATER TREATMENT PLANT
STANDARD DETAILS
MISCELLANEOUS METALS

NORTH CAROLINA PROFESSIONAL ENGINEER SEAL 42531 CHARLES W DAVIS

DESIGNED BY:	CWD
DRAWN BY:	PMD/EML
CHECKED BY:	CWD
PROJECT NO.:	3081-AB
DATE:	JUNE 7, 2020
SCALE:	AS NOTED

SHEET 91 OF 181

M801

Default
Print2PDFx.plt
1.0 " / in.
pdomagby
6/4/2020 5:27:44 PM
T:\Projects\BrunswickRegional_W&S_H2CO-3081\AB-Water_Supply&Treatment_Plant\Sheets\WTP\M801 - METALS.dgn

DocuSign Envelope ID: 4D5279CF-D412-45C6-8AD7-ED4B330F8B61

E001 - Legend

ABBREVIATIONS

AE	ANALYSIS ELEMENT
AHU	AIR HANDLING UNIT
AIC	AMPERE INTERRUPTING CAPACITY
AIT	ANALYSIS INDICATING TRANSMITTER
ANSI	AMERICAN NATIONAL STANDARDS INSTITUTE
ASCE	AMERICAN SOCIETY OF CIVIL ENGINEERS
ASME	AMERICAN SOCIETY OF MECHANICAL ENGINEERS
AF	AMPERE FRAME
AT	AMPERE TRIP
ATS	AUTOMATIC TRANSFER SWITCH
BC	BYPASS CONTACTOR
BCC	BARE COPPER CONDUCTOR
BKR	BREAKER
CPT	CONTROL POWER TRANSFORMER
CT	CURRENT TRANSFORMER
DB	DUCTBANK
DSW	DISCONNECT SWITCH
EHH	ELECTRIC HAND HOLE
EMH	ELECTRIC MANHOLE
EO	ELECTRICALLY OPERATED
ETM	ELAPSED TIME METER
ETU	ELECTRONIC TRIP UNIT
FAAP	FIRE ALARM ANNUNCIATOR PANEL
FACP	FIRE ALARM CONTROL PANEL
FE	FLOW ELEMENT
FIT	FLOW INSTRUMENT TRANSMITTER
FS	FLOW SWITCH
FSL	FLOW SWITCH LOW
FVNR	FULL VOLTAGE NON-REVERSING
FVR	FULL VOLTAGE REVERSING
GFCI	GROUND FAULT CIRCUIT INTERRUPTER
GFCT	GROUND FAULT CURRENT TRANSFORMER
IC	INPUT CONTACTOR
IEEE	INSTITUTE OF ELECTRICAL AND ELECTRONICS ENGINEERS
ISO	INTERNATIONAL ORGANIZATION FOR STANDARDIZATION
GND	GROUND
HSC	HYDRAULIC SYSTEMS CENTER
HOA	HAND-OFF-AUTO
LCS	LOCAL CONTROL STATION
LE	LEVEL ELEMENT
LP	LIGHTING PANEL
LS	LEVEL SWITCH
LSL	LEVEL SWITCH LOW
LSLL	LEVEL SWITCH LOW-LOW
LSH	LEVEL SWITCH HIGH
LSHH	LEVEL SWITCH HIGH-HIGH
LIT	LEVEL INSTRUMENT TRANSMITTER
MFR	MULTI-FUNCTION RELAY
MH	MANHOLE
MOD	MOTOR OPERATED DAMPER
MOG	MOTOR OPERATED GATE
MOL	MOTOR OPERATED LOUVER
MOV	MOTOR OPERATED VALVE
MPR	MOTOR PROTECTION RELAY
MTD	MOUNTED
MTS	MANUAL TRANSFER SWITCH
MWTS	MOTOR WINDING TEMPERATURE SWITCH
NC	NORMALLY CLOSED
NEC	NATIONAL ELECTRICAL CODE
NEMA	NATIONAL ELECTRICAL MANUFACTURERS ASSN
NFPA	NATIONAL FIRE PROTECTION ASSOCIATION
NO	NORMALLY OPEN
NTS	NOT TO SCALE
OC	OUTPUT CONTACTOR
OL	OVERLOAD
PCC	POINT OF COMMON COUPLING
PDC	POWER DISTRIBUTION CENTER
PE	PRESSURE ELEMENT
PIT	PRESSURE INDICATING TRANSMITTER
PLC	PROGRAMMABLE LOGIC CONTROLLER
PP	POWER PANEL
PSH	PRESSURE SWITCH HIGH
PST	PHASE SHIFTING TRANSFORMER
PT	POTENTIAL TRANSFORMER
PTT	PUSH TO TEST
RCS	REMOTE CONTROL STATION
RECP	RECEPTACLE
RIO	REMOTE I/O
RM	ROOM
RTD	RESISTANCE THERMAL DEVICE
RTU	REMOTE TELEMETRY UNIT
RVAT	REDUCED VOLTAGE AUTO TRANSFORMER
RVSS	REDUCED VOLTAGE SOLID STATE
SA	SUPPLY AIR
SCC	SYSTEM CONTROL CENTER
SE	SERVICE ENTRANCE
SPD	SURGE PROTECTIVE DEVICE
SST	STAINLESS STEEL
TB	TEST BLOCK
TC	TIMED CLOSE
TCL	TIME CLOCK
TO	TIMED OPEN
TSH	TWISTED SHIELDED
TX	TRANSFORMER
TYP	TYPICAL
UVDS	ULTRAVIOLET DISINFECTION SYSTEM
UPS	UNINTERRUPTIBLE POWER SUPPLY
VFD	VARIABLE FREQUENCY DRIVE
WPCR	WEATHER PROOF CORROSION RESISTANT
WT	WALK THROUGH
XFMR	TRANSFORMER

LIGHTING:

X DENOTES FIXTURE TYPE (TYP.)
SEE SPECIFICATION 16500 FOR FIXTURE SCHEDULE
# DENOTES CIRCUIT NUMBER (TYP.)

RECTANGULAR FIXTURE

LEFT: CEILING MOUNTED FIXTURE
RIGHT: WALL MOUNTED FIXTURE

EMERGENCY WALL-MOUNTED FIXTURE:
LEFT: STANDARD
RIGHT: REMOTE-HEAD

POLE-MOUNTED FIXTURE

LEFT: CEILING MOUNTED EXIT SIGN
RIGHT: WALL MOUNTED EXIT SIGN
SHADED PORTION DENOTES SIGN FACE

OCCUPANCY SENSOR

RECEPTACLES:

X DENOTES RECEPTACLE TYPE (TYP.):
GFCI DENOTES GROUND FAULT CIRCUIT INTERRUPT
UPS DENOTES UNINTERRUPTIBLE POWER SUPPLY
WPCR DENOTES WEATHERPROOF CORROSION RESISTANT
# DENOTES CIRCUIT NUMBER (TYP.)

DUPLEX RECEPTACLE

PANELS AND BOXES

JUNCTION BOX

PULL BOX

CONTROL PANEL

SWITCHES

WALL SWITCH:
X DENOTES TYPE:
NO SUBSCRIPT DENOTES SINGLE-POLE SWITCH
3 DENOTES 3-WAY SWITCH
4 DENOTES 4-WAY SWITCH
M DENOTES MANUAL MOTOR STARTER
# DENOTES CIRCUIT NUMBER
WPCR DENOTES WEATHERPROOF AND CORROSION RESISTANT

COMBINATION MOTOR STARTER

DISCONNECT SWITCH

LOCAL CONTROL STATION

ELEMENTARY CONTROL SCHEMATICS

3-POSITION SELECTOR SWITCH:
HOA DENOTES HAND/OFF/AUTO
LOR DENOTES LOCAL/OFF/REMOTE
FOR DENOTES FORWARD/OFF/REVERSE

PUSHBUTTON SWITCHES:
LEFT: N.O./RIGHT: N.C.
TEXT DENOTES LEGEND PLATE

MUSHROOM HEAD EMERGENCY STOP
PUSHBUTTON SWITCH N.C. MAINTAINED:
TEXT DENOTES LEGEND PLATE

PUSHBUTTON SWITCH N.C. WITH LOCK-OUT:
TEXT DENOTES LEGEND PLATE

SELECTOR SWITCH:
TEXT DENOTES LEGEND PLATE

THERMAL OVERLOAD RELAY

	NO	NC
DISCONNECT SWITCHES		
CONTACTS	X	X
TORQUE SWITCH	–	TS
LIMIT SWITCHES	LS	LS

NOTATION LEGEND:
NO/NC: NORMALLY OPEN/CLOSED
RO/RC: RISE-TO-OPEN/CLOSE
FO/FC: FALL-TO-OPEN/CLOSE
TO/TC: TIME-OPEN/CLOSE

CONTACTS:
TEXT DENOTES COIL ID

SWITCHES:
TEXT DENOTES TAG NUMBER

	NORC	NOFC	NCRO	NCFO
TEMPERATURE SWITCHES/ THERMOSTATS	TS	–	TS	–
PRESSURE SWITCHES	PS	PS	PS	PS
LEVEL SWITCHES	LS	LS	LS	LS
FLOW SWITCHES	FS	FS	FS	FS

	NOTC	NOTO	NCTO	NCTC
TIME DELAY SWITCHES	TD	TD	TD	TD

INDICATOR LIGHT:
LEFT: STANDARD/RIGHT: PUSH-TO-TEST
X DENOTES COLOR

ELEMENTARY CONTROL SCHEMATICS, CONT'D

RUN TIME METER

SOLENOID VALVE

MOTOR PROTECTION RELAY

CONTROL POWER TRANSFORMER

MECHANICAL INTERLOCK CONNECTION

MOTOR SPACE HEATER

COIL:
X DENOTES TYPE:
M DENOTES MOTOR STARTER
CR DENOTES CONTROL RELAY
TD DENOTES TIME DELAY RELAY
PR DENOTES INTERPOSING PILOT RELAY
LC DENOTES LIGHTING CONTACTOR
Y DENOTES REFERENCE LINE NUMBER

EQUIPMENT/DEVICE LOCATION SYMBOLS

LOCATED IN MCC

LOCATED IN STAND-ALONE MOTOR STARTER/CONTROLLER

LOCATED IN FIELD

LOCATED AT PANEL:
X DENOTES PANEL ID:
L DENOTES LOCAL CONTROL STATION

SINGLE-LINE DIAGRAMS

TRANSFORMER ID
45kVA
480-120/208V

TRANSFORMER

3P/4W
DRY TRANS

PROTECTIVE RELAY:
NUMBER DENOTES IEEE DEVICE FUNCTION

MOTOR AND TYPICAL ADDITIONAL DEVICES:
TSH: TEMPERATURE SWITCH
MSH: MOTOR SPACE HEATER
CF: COOLING FAN
TE: TEMPERATURE ELEMENT
ME: MOISTURE DETECTOR

INSTRUMENT TAG:
X DENOTES INSTRUMENT TYPE
Y DENOTES INSTRUMENT NUMBER

100A FUSE

30A 3P DISCONNECT SWITCH

LOW-VOLTAGE POWER CIRCUIT BREAKER:
LEFT: FIXED-MOUNT
RIGHT: DRAWOUT
E.O. DENOTES ELECTRICALLY OPERATED
LSIG DENOTES INSTALLED TRIP FUNCTIONS:
L DENOTES LONG-TIME
S DENOTES SHORT-TIME
I DENOTES INSTANTANEOUS
G DENOTES GROUND FAULT
CTR DENOTES BREAKER-SPECIFIC CT AND RATIOS

LOW-VOLTAGE MOLDED CASE CIRCUIT BREAKER
LEFT: THERMAL-MAGNETIC TRIP UNIT
RIGHT: ELECTRONIC TRIP UNIT

MOTOR CIRCUIT PROTECTOR

GROUND

CT:
NUMBERS DENOTE CT WINDING RATIO AND CT QUANTITY

GFCT:
NUMBERS DENOTE GFCT WINDING RATIO AND GFCT QUANTITY

PT:
NUMBERS DENOTE PT WINDING VOLTAGES AND PT QUANTITY

DRAW-OUT ELEMENT

LEFT: PANELBOARD
RIGHT: COMBINATION POWER UNIT
X DENOTES PANEL ID

LIGHTNING ARRESTOR

SINGLE-LINE DIAGRAMS, CONT'D.

LEFT: RESISTOR
RIGHT: LINE REACTOR:
#% DENOTES IMPEDANCE

CAPACITOR

SURGE PROTECTIVE DEVICE

KIRK-KEY INTERLOCK

FVNR STARTER:
X DENOTES NEMA SIZE
DP DENOTES DEFINITE PURPOSE CONTACTOR

VFD WITH LINE REACTOR

RVSS STARTER

GENERATOR

ATS

480V, 800A
3Ø,4W,3P
65kA,CLOSED
TRANSITION

DRAWOUT CB-STYLE ATS OR MTS

MISC PLAN VIEW SYMBOLS

EQUIPMENT CONNECTION

GROUND RODS:
LEFT: BURIED
RIGHT: IN TESTWELL

DUCTBANK TAG:
X DENOTES DUCTBANK ID

INSTRUMENT TAG:
X DENOTES INSTRUMENT TYPE
# DENOTES INSTRUMENT NUMBERS

CONDUIT TAGS:
P DENOTES POWER
C DENOTES CONTROL
I DENOTES INSTRUMENTATION
XXXX DENOTES CONDUIT ID

SECURITY & COMMUNICATIONS

FLUSH FLOOR BOX WITH POWER AND DATA

CEILING PROJECTOR MOUNT WITH POWER AND DATA

CAMERA LOCATION

VOICE DATA @ 18" UNLESS NOTED

CARD READER

DOOR SENSOR

LEFT: CEILING MOUNTED INTRUSION SENSOR
RIGHT: WALL MOUNTED INTRUSION SENSOR
'LR' DENOTES LONG RANGE, 'WA' DENOTES WIDE ANGLE

GENERAL NOTES:

1. UNLESS SPECIFICALLY NOTED OTHERWISE, ALL UNDERGROUND CONCRETE ENCASED ELECTRICAL CONDUITS SHALL BE PER THE TYPICAL DUCTBANK SECTION DETAIL.
2. THE INSTALLATION OF ALL CONCRETE ENCASED ELECTRICAL CONDUITS SHALL COMPLY WITH ACI 318, SECTION 6.3. CONTRACTOR SHALL SUPPLY EXPANSION JOINT FITTINGS AS REQUIRED FOR THERMAL EXPANSION AND DEFLECTION.
3. BOND ALL NEW CONCRETE ENCASED GROUND CONDUCTORS TO EXISTING GROUND CONDUCTORS IN ALL MANHOLES, PULL BOXES, CABLE TRAYS, AND SIMILAR LOCATIONS WHERE APPLICABLE.
4. UNLESS OTHERWISE SPECIFIED OR NOTED, ALL WALL MOUNTED ELECTRICAL PANELS, ENCLOSURES, AND SIMILAR EQUIPMENT SHALL BE MOUNTED 6'-6" (MAX) FROM THE TOP OF THE PANEL TO FINISHED FLOOR OR GRADE.
5. UNLESS OTHERWISE NOTED, ALL LIGHTING SWITCHES, CONTROL SWITCHES, AND SIMILAR EQUIPMENT SHALL BE MOUNTED WITH THEIR CENTERLINE APPROXIMATELY 4'-0" ABOVE FINISHED FLOOR, SLAB, OR GRADE. THERMOSTATS SHALL BE MOUNTED 4'-4" ABOVE FINISHED FLOOR.
6. A SEPARATE EQUIPMENT GROUNDING CONDUCTOR SHALL BE PROVIDED FOR EACH CIRCUIT (SEPARATE CONDUCTOR IN THE CONDUIT). THE CONDUCTOR SHALL BE TERMINATED AT THE PROPER DEVICE, TERMINAL, OR LUG AT THE POWER SOURCE (MCC GROUND BUS, PANELBOARD GROUND BUS, ETC.). GROUND CONDUCTOR SIZE SHALL BE PER THE LATEST EDITION OF THE NEC.
7. ELECTRICAL SYSTEMS INSTALLED IN HAZARDOUS LOCATIONS SHALL BE CONSTRUCTED IN ACCORDANCE WITH CHAPTER 5, ART. 500 OF THE LATEST EDITION OF THE NEC. CONTRACTOR SHALL SEAL ALL CONDUITS LEAVING HAZARDOUS AREAS. WALL AND FLOOR OPENINGS SHALL BE SEALED WITH FIREPROOF COMPOUND.
8. ALL EQUIPMENT LOCATED IN HAZARDOUS AREAS SHALL BE SUITABLE FOR THE CLASS, DIVISION, AND GROUP RATING OF THE LOCATION.
9. UNLESS SPECIFICALLY NOTED OTHERWISE, EXISTING PAVEMENT SHALL BE SAW CUT AND REMOVED TO ALLOW FOR THE INSTALLATION OF NEW ELECTRICAL DUCTBANKS. AFTER INSTALLATION, REPLACE PAVEMENT WITH NEW TO MATCH ORIGINAL CONDITIONS.
10. LIGHTNING PROTECTION SHALL BE PROVIDED FOR THE STRUCTURES INDICATED ON THE DRAWINGS AND IN ACCORDANCE WITH SECTION 16670.
11. CONDUIT HOMERUNS ARE NOT SHOWN ON DRAWINGS. CONTRACTOR SHALL REFER TO CONDUIT AND WIRE SCHEDULE, RISER DIAGRAMS, SINGLE LINE DIAGRAMS, AND OTHER DRAWINGS FOR CONDUIT AND WIRE REQUIREMENTS.
12. A LOCAL DISCONNECT SWITCH SHALL BE PROVIDED AT EACH PROCESS INSTRUMENT TO DISCONNECT THE 120 VAC POWER SUPPLY TO THE INSTRUMENT.

REVISIONS

THE WOOTEN COMPANY
120 North Boylan Avenue Raleigh, NC 27603-1423
919.828.0531 Fax 919.834.5389
License Number: F-0115

BRUNSWICK REGIONAL WATER AND SEWER H2GO
BRUNSWICK COUNTY NORTH CAROLINA
CONTRACT No. 4
REVERSE OSMOSIS WATER TREATMENT PLANT
ELECTRICAL
LEGEND AND GENERAL NOTES

NORTH CAROLINA PROFESSIONAL ENGINEER 16765 DocuSigned by: ROBERT E. EARLEY SEAL

DESIGNED BY: JJS/REE
DRAWN BY: PMD/EML
CHECKED BY: REE
PROJECT NO.: 3081-AB
DATE: JUNE 7, 2020
SCALE: AS NOTED

SHEET 92 OF 181

E001

pdf2013.pltcfg
59.9999 sf / in.
began
6/2/2020 1:26:55 PM
T:\Projects\Brunswick_Regional_W&S_H2GO-3081\AB-Water_Supply&Treatment_Plant\Sheets\WTP\Electrical\RO Plant Elect Sheets.dgn

DocuSign Envelope ID: 4D5279CF-D412-45C6-8AD7-ED4B330F8B61

E010-Elec Site Plan

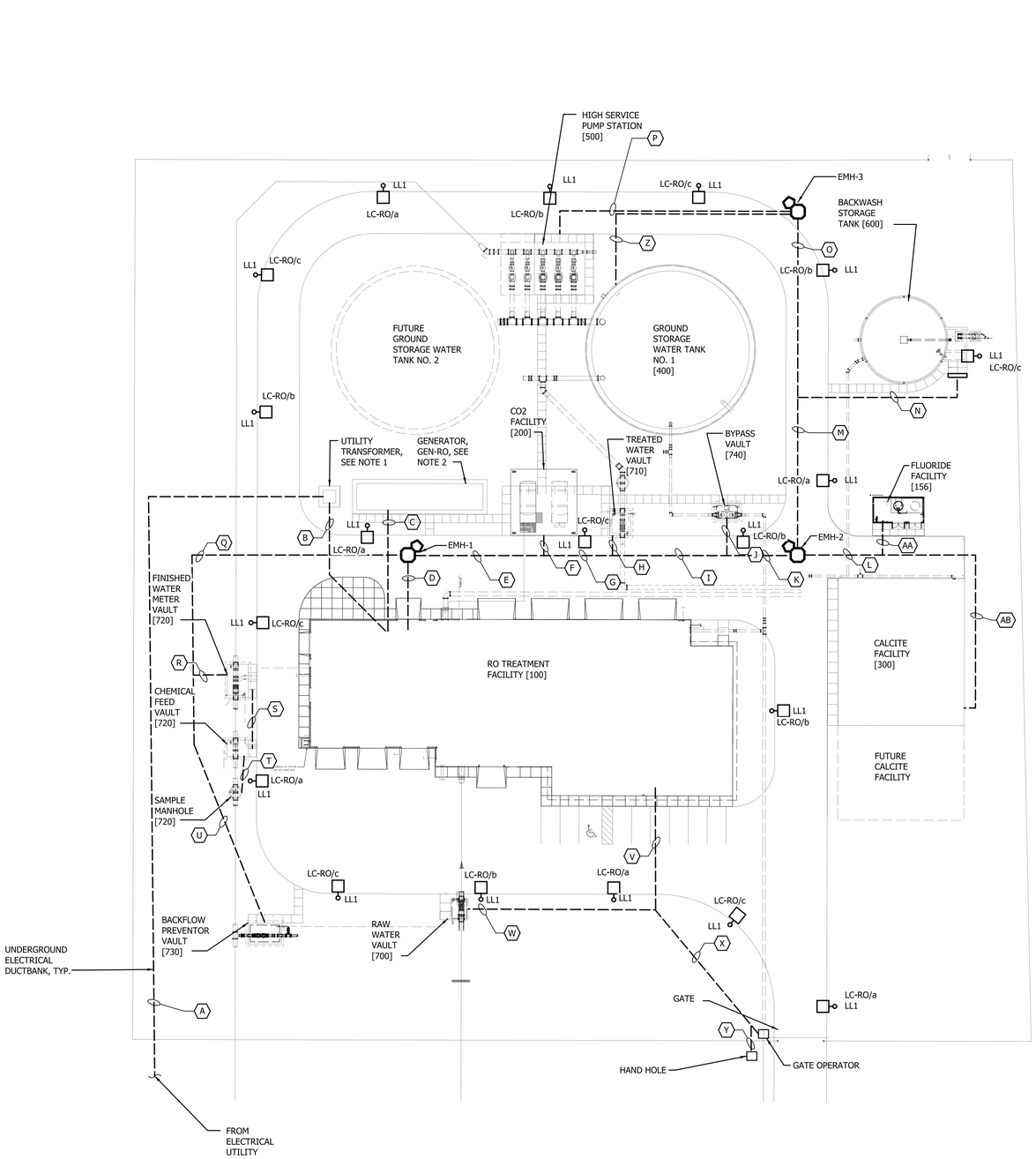

1 E010 ELECTRICAL-SITE PLAN
SCALE: 1" = 30'-0"

30' 15' 0 30' 60' 90'
SCALE: 1" = 30'

NOTES:

1. CONTRACTOR SHALL COORDINATE THE INSTALLATION OF THE ELECTRIC UTILITY OWNED FACILITIES WITH THE ELECTRIC UTILITY. THE CONTRACTOR SHALL FURNISH AND INSTALL THE TRANSFORMER PAD PER THE ELECTRIC UTILITY'S STANDARDS AND REQUIREMENTS. THE TRANSFORMER PAD SHALL BE SIZED TO ACCOMMODATE A 2500 kVA TRANSFORMER. THE CONTRACTOR SHALL FURNISH AND INSTALL ALL WIRE AND CONDUIT REQUIRED FOR THE METERING EQUIPMENT SUPPLIED BY THE ELECTRIC UTILITY. REFERENCE SPECIFICATION SECTION 16210 FOR ADDITIONAL REQUIREMENTS AND INFORMATION.
2. CONTRACTOR SHALL FURNISH AND INSTALL A GROUNDING RING AROUND THE GENERATOR CONSISTING OF #4/0 BARE COPPER CONDUCTOR WITH A GROUND ROD ON EACH CORNER, ONE OF WHICH WITH A TEST WELL PER DETAIL 3/E801.
3. CONTRACTOR SHALL FURNISH AND INSTALL SITE LIGHTING AS SHOWN. FIXTURES SHALL BE SOURCED FROM LIGHTING CONTACTOR, LC-RO IN THE ELECTRICAL ROOM OF THE RO TREATMENT FACILITY. CONDUIT FOR SITE LIGHTING CIRCUITS ARE INCLUDED IN THE CONDUIT AND WIRE SCHEDULES; HOWEVER, CONDUIT AND WIRE FOR SITE LIGHTING IS NOT INCLUDED IN THE DUCT BANK TABLES. DUCT BANK SERVING ALL LIGHT POLES SHALL BE A 1" CONDUIT ENCASED IN A 4" CONCRETE ENVELOPE UNDER ROADWAYS WITHOUT REINFORCEMENT.
4. REFERENCE DRAWING E011 & E012 FOR DUCTBANK FILL INFORMATION.

REVISIONS

THE WOOTEN COMPANY
120 North Boylan Avenue Raleigh, NC 27603-1423
919.828.0531 fax 919.834.3589
License Number: F-0115

BRUNSWICK REGIONAL WATER AND SEWER H2GO
BRUNSWICK COUNTY NORTH CAROLINA
CONTRACT No. 4
REVERSE OSMOSIS WATER TREATMENT PLANT
ELECTRICAL
RO TREATMENT PLANT
OVERALL SITE PLAN

NORTH CAROLINA PROFESSIONAL ENGINEER 16765 ROBERT E. EGAN

DESIGNED BY:	JJS/REE
DRAWN BY:	PMD/EML
CHECKED BY:	REE
PROJECT NO.:	3081-AB
DATE:	JUNE 7, 2020
SCALE:	AS NOTED

SHEET 93 OF 181

E010

pdf2013.pltcfg
29.9999 ' / in.
began
6/2/2020 1:27:21 PM
T:\Projects\Brunswick_Regional_W&S_H2GO-3081\AB-Water_Supply&Treatment_Plant\Sheets\WTP\Electrical\RO Plant Elect Sheets.dgn

DocuSign Envelope ID: 15CE123C-6E50-4D83-BC50-B8D25C91C3E7

E011 - DUCTBANK SCHED

DUCTBANK NO.	CONDUIT	SIZE	FROM	TO
A	UTILITY	6"	UTILITY POLE	UTILITY TRANSFORMER (WIRE BY UTILITY)
	UTILITY	6"	UTILITY POLE	UTILITY TRANSFORMER (WIRE BY UTILITY)
B	P-1000	4"	UTILITY TRANSFORMER/METERING	SWBD-RO
	P-1001	4"	UTILITY TRANSFORMER/METERING	SWBD-RO
	P-1002	4"	UTILITY TRANSFORMER/METERING	SWBD-RO
	P-1003	4"	UTILITY TRANSFORMER/METERING	SWBD-RO
	P-1004	4"	UTILITY TRANSFORMER/METERING	SWBD-RO
	P-1005	4"	UTILITY TRANSFORMER/METERING	SWBD-RO
	P-1006	4"	UTILITY TRANSFORMER/METERING	SWBD-RO
	P-1007	4"	UTILITY TRANSFORMER/METERING	SWBD-RO
	P-1008	4"	UTILITY TRANSFORMER/METERING	SWBD-RO
	P-1009	4"	UTILITY TRANSFORMER/METERING	SWBD-RO
	P-1010	4"	UTILITY TRANSFORMER/METERING	SWBD-RO
	P-1011	4"	UTILITY TRANSFORMER/METERING	SWBD-RO
C	C-1004	1"	ATS-RO	GEN-RO
	C-1005	1"	PLC-1	GEN-RO
	C-1006	1"	PLC-1	GEN-RO
	P-1012	4"	GEN-RO	SWBD-RO
	P-1013	4"	GEN-RO	SWBD-RO
	P-1014	4"	GEN-RO	SWBD-RO
	P-1015	4"	GEN-RO	SWBD-RO
	P-1016	4"	GEN-RO	SWBD-RO
	P-1017	4"	GEN-RO	SWBD-RO
	P-1018	4"	GEN-RO	SWBD-RO
	P-1019	4"	GEN-RO	SWBD-RO
	P-1020	4"	GEN-RO	SWBD-RO
	P-1021	4"	GEN-RO	SWBD-RO
	P-1022	4"	GEN-RO	SWBD-RO
	P-1023	4"	GEN-RO	SWBD-RO
	P-1077	1"	SWBD-RO	GEN-RO COMBINATION POWER UNIT
D	C-1001	2"	PLC-1	PLC-4
	C-1002	2"	PLC-1	PLC-4
	C-1020	1"	PLC-1	CO2 SYSTEM STORAGE TANK NO.1 CP
	C-1021	1"	PLC-1	FUTURE CO2 SYSTEM STORAGE TANK NO.2 CP
	C-1034	1"	PLC-1	FLUORIDE SKID
	C-1035	1"	PLC-1	FSH-188
	C-1036	2"	PLC-1	EMH-1
	C-1037	2"	PLC-1	EMH-1
	C-1038	3/4"	PLC-1	YA-503,504
	C-1076	1"	HIGH SERVICE PUMP NO.1 RVSS	PCVP-HSP-1
	C-1080	1"	HIGH SERVICE PUMP NO.2 RVSS	PCVP-HSP-2
	C-1084	1"	HIGH SERVICE PUMP NO.3 RVSS	PCVP-HSP-3
	C-1088	1"	FUTURE HIGH SERVICE PUMP NO.4 RVSS	FUTURE CPB-HSP-4
	C-1089	1"	FUTURE HIGH SERVICE PUMP NO.5 RVSS	FUTURE CPB-HSP-5
	C-1107	1"	MCC-RO	CPB-WP-1
	C-1111	1"	MCC-RO	CPB-WP-2
	C-1115	1"	MCC-RO	CPB-MIX-2
	I-1051	1"	PLC-1	LIT-161
	I-1053	1"	PLC-1	PIT-180
	I-1054	1"	PLC-1	FIT-167
	I-1057	1"	PLC-1	LIT-170
	I-1060	1"	PLC-1	FIT-187
	I-1065	1"	PLC-1	LIT-189
	I-1067	1-1/2"	PLC-1	FLUORIDE SKID
	I-1068	1"	PLC-1	FIT-191
	I-1070	2"	PLC-1	EMH-1
	I-1071	2"	PLC-1	EMH-1
	I-1074	1"	PLC-1	LIT-501
	I-1076	1"	PLC-1	LIT-502
	P-1054	2"	HIGH SERVICE PUMP NO.1 RVSS	HIGH SERVICE PUMP NO.1
	P-1055	2"	HIGH SERVICE PUMP NO.1 RVSS	HIGH SERVICE PUMP NO.1
	P-1058	2"	HIGH SERVICE PUMP NO.2 RVSS	HIGH SERVICE PUMP NO.2
	P-1059	2"	HIGH SERVICE PUMP NO.2 RVSS	HIGH SERVICE PUMP NO.2
	P-1062	2"	HIGH SERVICE PUMP NO.3 RVSS	HIGH SERVICE PUMP NO.3
	P-1063	2"	HIGH SERVICE PUMP NO.3 RVSS	HIGH SERVICE PUMP NO.3
	P-1066	2"	FUTURE HIGH SERVICE PUMP NO.4 RVSS	FUTURE HIGH SERVICE PUMP NO.4
	P-1067	2"	FUTURE HIGH SERVICE PUMP NO.4 RVSS	FUTURE HIGH SERVICE PUMP NO.4
	P-1070	2"	FUTURE HIGH SERVICE PUMP NO.5 RVSS	FUTURE HIGH SERVICE PUMP NO.5
	P-1071	2"	FUTURE HIGH SERVICE PUMP NO.5 RVSS	FUTURE HIGH SERVICE PUMP NO.5
	P-1075	3"	SWBD-RO	PP-CAL
	P-1076	3"	SWBD-RO	PP-CAL
	P-1086	1"	SWBD-RO	CO2 SYSTEM STORAGE TANK NO.1
	P-1087	1"	SWBD-RO	FUTURE CO2 SYSTEM STORAGE TANK NO.2
	P-1155	1"	MCC-RO	BACKWASH HOLDING BASIN PUMP NO.1
	P-1156	1"	MCC-RO	BACKWASH HOLDING BASIN PUMP NO.2
	P-1157	1"	MCC-RO	BACKWASH HOLDING BASIN MIXER DSW
	P-1188	1"	LP-RO-1	LIT-170
	P-1210	1"	LP-RO-2	CO2 FACILITY LIGHTING & RECEPT
	P-1212	1"	LP-RO-2	TREATED WATER VAULT
	P-1220	1"	LP-RO-2	BYPASS VAULT
	P-1255	2"	SWBD-RO	EMH-1
	P-1256	2"	SWBD-RO	EMH-1
	P-1257	2"	SWBD-RO	EMH-1
	P-1258	2"	SWBD-RO	EMH-1
	P-1267	3/4"	PP-RO	EMH-1
	P-1268	3/4"	PP-RO	EMH-1

DUCTBANK NO.	CONDUIT	SIZE	FROM	TO
E	C-1001	2"	PLC-1	PLC-4
	C-1002	2"	PLC-1	PLC-4
	C-1020	1"	PLC-1	CO2 SYSTEM STORAGE TANK NO.1 CP
	C-1021	1"	PLC-1	FUTURE CO2 SYSTEM STORAGE TANK NO.2 CP
	C-1034	1"	PLC-1	FLUORIDE SKID
	C-1035	1"	PLC-1	FSH-188
	C-1038	3/4"	PLC-1	YA-503,504
	C-1076	1"	HIGH SERVICE PUMP NO.1 RVSS	PCVP-HSP-1
	C-1080	1"	HIGH SERVICE PUMP NO.2 RVSS	PCVP-HSP-2
	C-1084	1"	HIGH SERVICE PUMP NO.3 RVSS	PCVP-HSP-3
	C-1088	1"	FUTURE HIGH SERVICE PUMP NO.4 RVSS	FUTURE CPB-HSP-4
	C-1089	1"	FUTURE HIGH SERVICE PUMP NO.5 RVSS	FUTURE CPB-HSP-5
	C-1107	1"	MCC-RO	CPB-WP-1
	C-1111	1"	MCC-RO	CPB-WP-2
	C-1115	1"	MCC-RO	CPB-MIX-2
	C-1130	2"	EMH-1	EMH-3
	C-1131	2"	EMH-1	EMH-3
	I-1051	1"	PLC-1	LIT-161
	I-1057	1"	PLC-1	LIT-170
	I-1065	1"	PLC-1	LIT-189
	I-1067	1-1/2"	PLC-1	FLUORIDE SKID
	I-1068	1"	PLC-1	FIT-191
	I-1072	2"	EMH-1	EMH-3
	I-1073	2"	EMH-1	EMH-3
	I-1074	1"	PLC-1	LIT-501
	I-1076	1"	PLC-1	LIT-502
	P-1054	2"	HIGH SERVICE PUMP NO.1 RVSS	HIGH SERVICE PUMP NO.1
	P-1055	2"	HIGH SERVICE PUMP NO.1 RVSS	HIGH SERVICE PUMP NO.1
	P-1058	2"	HIGH SERVICE PUMP NO.2 RVSS	HIGH SERVICE PUMP NO.2
	P-1059	2"	HIGH SERVICE PUMP NO.2 RVSS	HIGH SERVICE PUMP NO.2
	P-1062	2"	HIGH SERVICE PUMP NO.3 RVSS	HIGH SERVICE PUMP NO.3
	P-1063	2"	HIGH SERVICE PUMP NO.3 RVSS	HIGH SERVICE PUMP NO.3
	P-1066	2"	FUTURE HIGH SERVICE PUMP NO.4 RVSS	FUTURE HIGH SERVICE PUMP NO.4
F	C-1020	1"	PLC-1	CO2 SYSTEM STORAGE TANK NO.1 CP
	C-1021	1"	PLC-1	FUTURE CO2 SYSTEM STORAGE TANK NO.2 CP
	P-1086	1"	SWBD-RO	CO2 SYSTEM STORAGE TANK NO.1
	P-1087	1"	SWBD-RO	FUTURE CO2 SYSTEM STORAGE TANK NO.2
	P-1210	1"	LP-RO-2	CO2 FACILITY LIGHTING & RECEPT
G	C-1001	2"	PLC-1	PLC-4
	C-1002	2"	PLC-1	PLC-4
	C-1034	1"	PLC-1	FLUORIDE SKID
	C-1035	1"	PLC-1	FSH-188
	C-1038	3/4"	PLC-1	YA-503,504
	C-1076	1"	HIGH SERVICE PUMP NO.1 RVSS	PCVP-HSP-1
	C-1080	1"	HIGH SERVICE PUMP NO.2 RVSS	PCVP-HSP-2
	C-1084	1"	HIGH SERVICE PUMP NO.3 RVSS	PCVP-HSP-3
	C-1088	1"	FUTURE HIGH SERVICE PUMP NO.4 RVSS	FUTURE CPB-HSP-4
	C-1089	1"	FUTURE HIGH SERVICE PUMP NO.5 RVSS	FUTURE CPB-HSP-5
	C-1107	1"	MCC-RO	CPB-WP-1
	C-1111	1"	MCC-RO	CPB-WP-2
	C-1115	1"	MCC-RO	CPB-MIX-2
	C-1130	2"	EMH-1	EMH-3
	C-1131	2"	EMH-1	EMH-3
	I-1051	1"	PLC-1	LIT-161
	I-1057	1"	PLC-1	LIT-170
	I-1065	1"	PLC-1	LIT-189
	I-1067	1-1/2"	PLC-1	FLUORIDE SKID
	I-1068	1"	PLC-1	FIT-191
	I-1072	2"	EMH-1	EMH-3
	I-1073	2"	EMH-1	EMH-3
	I-1074	1"	PLC-1	LIT-501
	I-1076	1"	PLC-1	LIT-502
	P-1054	2"	HIGH SERVICE PUMP NO.1 RVSS	HIGH SERVICE PUMP NO.1
	P-1055	2"	HIGH SERVICE PUMP NO.1 RVSS	HIGH SERVICE PUMP NO.1
	P-1058	2"	HIGH SERVICE PUMP NO.2 RVSS	HIGH SERVICE PUMP NO.2
	P-1059	2"	HIGH SERVICE PUMP NO.2 RVSS	HIGH SERVICE PUMP NO.2
	P-1062	2"	HIGH SERVICE PUMP NO.3 RVSS	HIGH SERVICE PUMP NO.3
	P-1063	2"	HIGH SERVICE PUMP NO.3 RVSS	HIGH SERVICE PUMP NO.3
	P-1066	2"	FUTURE HIGH SERVICE PUMP NO.4 RVSS	FUTURE HIGH SERVICE PUMP NO.4

DUCTBANK NO.	CONDUIT	SIZE	FROM	TO
	P-1067	2"	FUTURE HIGH SERVICE PUMP NO.4 RVSS	FUTURE HIGH SERVICE PUMP NO.4
	P-1070	2"	FUTURE HIGH SERVICE PUMP NO.5 RVSS	FUTURE HIGH SERVICE PUMP NO.5
	P-1071	2"	FUTURE HIGH SERVICE PUMP NO.5 RVSS	FUTURE HIGH SERVICE PUMP NO.5
	P-1075	3"	SWBD-RO	PP-CAL
	P-1076	3"	SWBD-RO	PP-CAL
	P-1155	1"	MCC-RO	BACKWASH HOLDING BASIN PUMP NO.1
	P-1156	1"	MCC-RO	BACKWASH HOLDING BASIN PUMP NO.2
	P-1157	1"	MCC-RO	BACKWASH HOLDING BASIN MIXER DSW
	P-1188	1"	LP-RO-1	LIT-170
	P-1220	1"	LP-RO-2	BYPASS VAULT
	P-1259	2"	EMH-1	EMH-3
	P-1260	2"	EMH-1	EMH-3
	P-1261	2"	EMH-1	EMH-3
	P-1262	2"	EMH-1	EMH-3
	P-1269	3/4"	EMH-1	EMH-3
	P-1270	3/4"	EMH-1	EMH-3
H	P-1212	1"	LP-RO-2	TREATED WATER VAULT
I	C-1001	2"	PLC-1	PLC-4
	C-1002	2"	PLC-1	PLC-4
	C-1034	1"	PLC-1	FLUORIDE SKID
	C-1035	1"	PLC-1	FSH-188
	C-1038	3/4"	PLC-1	YA-503,504
	C-1076	1"	HIGH SERVICE PUMP NO.1 RVSS	PCVP-HSP-1
	C-1080	1"	HIGH SERVICE PUMP NO.2 RVSS	PCVP-HSP-2
	C-1084	1"	HIGH SERVICE PUMP NO.3 RVSS	PCVP-HSP-3
	C-1088	1"	FUTURE HIGH SERVICE PUMP NO.4 RVSS	FUTURE CPB-HSP-4
	C-1089	1"	FUTURE HIGH SERVICE PUMP NO.5 RVSS	FUTURE CPB-HSP-5
	C-1107	1"	MCC-RO	CPB-WP-1
	C-1111	1"	MCC-RO	CPB-WP-2
	C-1115	1"	MCC-RO	CPB-MIX-2
	C-1130	2"	EMH-1	EMH-3
	C-1131	2"	EMH-1	EMH-3
	I-1051	1"	PLC-1	LIT-161
	I-1057	1"	PLC-1	LIT-170
	I-1065	1"	PLC-1	LIT-189
	I-1067	1-1/2"	PLC-1	FLUORIDE SKID
	I-1068	1"	PLC-1	FIT-191
	I-1072	2"	EMH-1	EMH-3
	I-1073	2"	EMH-1	EMH-3
	I-1074	1"	PLC-1	LIT-501
	I-1076	1"	PLC-1	LIT-502
	P-1054	2"	HIGH SERVICE PUMP NO.1 RVSS	HIGH SERVICE PUMP NO.1
	P-1055	2"	HIGH SERVICE PUMP NO.1 RVSS	HIGH SERVICE PUMP NO.1
	P-1058	2"	HIGH SERVICE PUMP NO.2 RVSS	HIGH SERVICE PUMP NO.2
	P-1059	2"	HIGH SERVICE PUMP NO.2 RVSS	HIGH SERVICE PUMP NO.2
	P-1062	2"	HIGH SERVICE PUMP NO.3 RVSS	HIGH SERVICE PUMP NO.3
	P-1063	2"	HIGH SERVICE PUMP NO.3 RVSS	HIGH SERVICE PUMP NO.3
	P-1066	2"	FUTURE HIGH SERVICE PUMP NO.4 RVSS	FUTURE HIGH SERVICE PUMP NO.4
	P-1067	2"	FUTURE HIGH SERVICE PUMP NO.4 RVSS	FUTURE HIGH SERVICE PUMP NO.4
	P-1070	2"	FUTURE HIGH SERVICE PUMP NO.5 RVSS	FUTURE HIGH SERVICE PUMP NO.5
	P-1071	2"	FUTURE HIGH SERVICE PUMP NO.5 RVSS	FUTURE HIGH SERVICE PUMP NO.5
	P-1075	3"	SWBD-RO	PP-CAL
	P-1076	3"	SWBD-RO	PP-CAL
	P-1155	1"	MCC-RO	BACKWASH HOLDING BASIN PUMP NO.1
	P-1156	1"	MCC-RO	BACKWASH HOLDING BASIN PUMP NO.2
	P-1157	1"	MCC-RO	BACKWASH HOLDING BASIN MIXER DSW
	P-1188	1"	LP-RO-1	LIT-170
	P-1220	1"	LP-RO-2	BYPASS VAULT
	P-1259	2"	EMH-1	EMH-3
	P-1260	2"	EMH-1	EMH-3
	P-1261	2"	EMH-1	EMH-3
	P-1262	2"	EMH-1	EMH-3
	P-1269	3/4"	EMH-1	EMH-3
	P-1270	3/4"	EMH-1	EMH-3
J	P-1220	1"	LP-RO-2	BYPASS VAULT
K	C-1001	2"	PLC-1	PLC-4
	C-1002	2"	PLC-1	PLC-4
	C-1034	1"	PLC-1	FLUORIDE SKID
	C-1035	1"	PLC-1	FSH-188
	C-1038	3/4"	PLC-1	YA-503,504
	C-1076	1"	HIGH SERVICE PUMP NO.1 RVSS	PCVP-HSP-1
	C-1080	1"	HIGH SERVICE PUMP NO.2 RVSS	PCVP-HSP-2
	C-1084	1"	HIGH SERVICE PUMP NO.3 RVSS	PCVP-HSP-3
	C-1088	1"	FUTURE HIGH SERVICE PUMP NO.4 RVSS	FUTURE CPB-HSP-4
	C-1089	1"	FUTURE HIGH SERVICE PUMP NO.5 RVSS	FUTURE CPB-HSP-5
	C-1107	1"	MCC-RO	CPB-WP-1
	C-1111	1"	MCC-RO	CPB-WP-2
	C-1115	1"	MCC-RO	CPB-MIX-2
	C-1130	2"	EMH-1	EMH-3
	C-1131	2"	EMH-1	EMH-3
	I-1051	1"	PLC-1	LIT-161
	I-1057	1"	PLC-1	LIT-170
	I-1065	1"	PLC-1	LIT-189
	I-1067	1-1/2"	PLC-1	FLUORIDE SKID
	I-1068	1"	PLC-1	FIT-191

REVISIONS

THE WOOTEN COMPANY
120 North Boylan Avenue Raleigh, NC 27603-1423
919.828.0531 Fax 919.834.3589
License Number: F-0115

BRUNSWICK REGIONAL WATER AND SEWER H2GO
BRUNSWICK COUNTY NORTH CAROLINA
CONTRACT No. 4
REVERSE OSMOSIS WATER TREATMENT PLANT
ELECTRICAL
RO TREATMENT PLANT
DUCTBANK SCHEDULES

NORTH CAROLINA PROFESSIONAL ENGINEER 16765 DocuSigned by: ROBERT E. EVANS

DESIGNED BY: JJS/REE
DRAWN BY: PMD/EML
CHECKED BY: REE
PROJECT NO.: 3081-AB
DATE: JUNE 7, 2020
SCALE: AS NOTED

SHEET 94 OF 181

E011

pdf2013.pltcfg
29.9999 ' / in.
began
6/3/2020 9:51:19 AM
T:\Projects\Brunswick_Regional_W&S_H2GO-3081\AB-Water_Supply&Treatment_Plant\Sheets\WTP\Electrical\RO Plant Elect Sheets.dgn

DocuSign Envelope ID: 15CE123C-6E50-4D83-BC50-B8D25C91C3E7

E012-DUCTBANK SCHED

DUCTBANK NO.	CONDUIT	SIZE	FROM	TO
	I-1072	2"	EMH-1	EMH-3
	I-1073	2"	EMH-1	EMH-3
	I-1074	1"	PLC-1	LIT-501
	I-1076	1"	PLC-1	LIT-502
	P-1054	2"	HIGH SERVICE PUMP NO.1 RVSS	HIGH SERVICE PUMP NO.1
	P-1055	2"	HIGH SERVICE PUMP NO.1 RVSS	HIGH SERVICE PUMP NO.1
	P-1058	2"	HIGH SERVICE PUMP NO.2 RVSS	HIGH SERVICE PUMP NO.2
	P-1059	2"	HIGH SERVICE PUMP NO.2 RVSS	HIGH SERVICE PUMP NO.2
	P-1062	2"	HIGH SERVICE PUMP NO.3 RVSS	HIGH SERVICE PUMP NO.3
	P-1063	2"	HIGH SERVICE PUMP NO.3 RVSS	HIGH SERVICE PUMP NO.3
	P-1066	2"	FUTURE HIGH SERVICE PUMP NO.4 RVSS	FUTURE HIGH SERVICE PUMP NO.4
	P-1067	2"	FUTURE HIGH SERVICE PUMP NO.4 RVSS	FUTURE HIGH SERVICE PUMP NO.4
	P-1070	2"	FUTURE HIGH SERVICE PUMP NO.5 RVSS	FUTURE HIGH SERVICE PUMP NO.5
	P-1071	2"	FUTURE HIGH SERVICE PUMP NO.5 RVSS	FUTURE HIGH SERVICE PUMP NO.5
	P-1075	3"	SWBD-RO	PP-CAL
	P-1076	3"	SWBD-RO	PP-CAL
	P-1155	1"	MCC-RO	BACKWASH HOLDING BASIN PUMP NO.1
	P-1156	1"	MCC-RO	BACKWASH HOLDING BASIN PUMP NO.2
	P-1157	1"	MCC-RO	BACKWASH HOLDING BASIN MIXER DSW
	P-1188	1"	LP-RO-1	LIT-170
	P-1259	2"	EMH-1	EMH-3
	P-1260	2"	EMH-1	EMH-3
	P-1261	2"	EMH-1	EMH-3
	P-1262	2"	EMH-1	EMH-3
	P-1269	3/4"	EMH-1	EMH-3
	P-1270	3/4"	EMH-1	EMH-3
L	C-1001	2"	PLC-1	PLC-4
	C-1002	2"	PLC-1	PLC-4
	C-1034	1"	PLC-1	FLUORIDE SKID
	C-1035	1"	PLC-1	FSH-188
	C-1038	3/4"	PLC-1	YA-503,504
	I-1065	1"	PLC-1	LIT-189
	I-1067	1-1/2"	PLC-1	FLUORIDE SKID
	I-1068	1"	PLC-1	FIT-191
	I-1074	1"	PLC-1	LIT-501
	I-1076	1"	PLC-1	LIT-502
	P-1075	3"	SWBD-RO	PP-CAL
	P-1076	3"	SWBD-RO	PP-CAL
	P-2058	1-1/2"	PP-CAL	FLUORIDE FACILITY WATER HEATER
	P-2062	1-1/2"	LP-CAL	FLUORIDE FACILITY PANEL LP-FLUOR
M	C-1076	1"	HIGH SERVICE PUMP NO.1 RVSS	PCVP-HSP-1
	C-1080	1"	HIGH SERVICE PUMP NO.2 RVSS	PCVP-HSP-2
	C-1084	1"	HIGH SERVICE PUMP NO.3 RVSS	PCVP-HSP-3
	C-1088	1"	FUTURE HIGH SERVICE PUMP NO.4 RVSS	FUTURE CPB-HSP-4
	C-1089	1"	FUTURE HIGH SERVICE PUMP NO.5 RVSS	FUTURE CPB-HSP-5
	C-1107	1"	MCC-RO	CPB-WP-1
	C-1111	1"	MCC-RO	CPB-WP-2
	C-1115	1"	MCC-RO	CPB-MIX-2
	C-1130	2"	EMH-1	EMH-3
	C-1131	2"	EMH-1	EMH-3
	I-1051	1"	PLC-1	LIT-161
	I-1057	1"	PLC-1	LIT-170
	I-1072	2"	EMH-1	EMH-3
	I-1073	2"	EMH-1	EMH-3
	P-1054	2"	HIGH SERVICE PUMP NO.1 RVSS	HIGH SERVICE PUMP NO.1
	P-1055	2"	HIGH SERVICE PUMP NO.1 RVSS	HIGH SERVICE PUMP NO.1
	P-1058	2"	HIGH SERVICE PUMP NO.2 RVSS	HIGH SERVICE PUMP NO.2
	P-1059	2"	HIGH SERVICE PUMP NO.2 RVSS	HIGH SERVICE PUMP NO.2
	P-1062	2"	HIGH SERVICE PUMP NO.3 RVSS	HIGH SERVICE PUMP NO.3
	P-1063	2"	HIGH SERVICE PUMP NO.3 RVSS	HIGH SERVICE PUMP NO.3
	P-1066	2"	FUTURE HIGH SERVICE PUMP NO.4 RVSS	FUTURE HIGH SERVICE PUMP NO.4
	P-1067	2"	FUTURE HIGH SERVICE PUMP NO.4 RVSS	FUTURE HIGH SERVICE PUMP NO.4
	P-1070	2"	FUTURE HIGH SERVICE PUMP NO.5 RVSS	FUTURE HIGH SERVICE PUMP NO.5
	P-1071	2"	FUTURE HIGH SERVICE PUMP NO.5 RVSS	FUTURE HIGH SERVICE PUMP NO.5
	P-1155	1"	MCC-RO	BACKWASH HOLDING BASIN PUMP NO.1
	P-1156	1"	MCC-RO	BACKWASH HOLDING BASIN PUMP NO.2
	P-1157	1"	MCC-RO	BACKWASH HOLDING BASIN MIXER DSW
	P-1188	1"	LP-RO-1	LIT-170
	P-1259	2"	EMH-1	EMH-3
	P-1260	2"	EMH-1	EMH-3
	P-1261	2"	EMH-1	EMH-3
	P-1262	2"	EMH-1	EMH-3
	P-1269	3/4"	EMH-1	EMH-3
	P-1270	3/4"	EMH-1	EMH-3
N	C-1107	1"	MCC-RO	CPB-WP-1
	C-1111	1"	MCC-RO	CPB-WP-2
	C-1115	1"	MCC-RO	CPB-MIX-2
	I-1057	1"	PLC-1	LIT-170
	P-1155	1"	MCC-RO	BACKWASH HOLDING BASIN PUMP NO.1
	P-1156	1"	MCC-RO	BACKWASH HOLDING BASIN PUMP NO.2
	P-1157	1"	MCC-RO	BACKWASH HOLDING BASIN MIXER DSW
	P-1188	1"	LP-RO-1	LIT-170

DUCTBANK NO.	CONDUIT	SIZE	FROM	TO
O	C-1076	1"	HIGH SERVICE PUMP NO.1 RVSS	PCVP-HSP-1
	C-1080	1"	HIGH SERVICE PUMP NO.2 RVSS	PCVP-HSP-2
	C-1084	1"	HIGH SERVICE PUMP NO.3 RVSS	PCVP-HSP-3
	C-1088	1"	FUTURE HIGH SERVICE PUMP NO.4 RVSS	FUTURE CPB-HSP-4
	C-1089	1"	FUTURE HIGH SERVICE PUMP NO.5 RVSS	FUTURE CPB-HSP-5
	C-1130	2"	EMH-1	EMH-3
	C-1131	2"	EMH-1	EMH-3
	I-1051	1"	PLC-1	LIT-161
	I-1072	2"	EMH-1	EMH-3
	I-1073	2"	EMH-1	EMH-3
	P-1054	2"	HIGH SERVICE PUMP NO.1 RVSS	HIGH SERVICE PUMP NO.1
	P-1055	2"	HIGH SERVICE PUMP NO.1 RVSS	HIGH SERVICE PUMP NO.1
	P-1058	2"	HIGH SERVICE PUMP NO.2 RVSS	HIGH SERVICE PUMP NO.2
	P-1059	2"	HIGH SERVICE PUMP NO.2 RVSS	HIGH SERVICE PUMP NO.2
	P-1062	2"	HIGH SERVICE PUMP NO.3 RVSS	HIGH SERVICE PUMP NO.3
	P-1063	2"	HIGH SERVICE PUMP NO.3 RVSS	HIGH SERVICE PUMP NO.3
	P-1066	2"	FUTURE HIGH SERVICE PUMP NO.4 RVSS	FUTURE HIGH SERVICE PUMP NO.4
	P-1067	2"	FUTURE HIGH SERVICE PUMP NO.4 RVSS	FUTURE HIGH SERVICE PUMP NO.4
	P-1070	2"	FUTURE HIGH SERVICE PUMP NO.5 RVSS	FUTURE HIGH SERVICE PUMP NO.5
	P-1071	2"	FUTURE HIGH SERVICE PUMP NO.5 RVSS	FUTURE HIGH SERVICE PUMP NO.5
	P-1259	2"	EMH-1	EMH-3
	P-1260	2"	EMH-1	EMH-3
	P-1261	2"	EMH-1	EMH-3
	P-1262	2"	EMH-1	EMH-3
	P-1269	3/4"	EMH-1	EMH-3
	P-1270	3/4"	EMH-1	EMH-3
P	C-1076	1"	HIGH SERVICE PUMP NO.1 RVSS	PCVP-HSP-1
	C-1080	1"	HIGH SERVICE PUMP NO.2 RVSS	PCVP-HSP-2
	C-1084	1"	HIGH SERVICE PUMP NO.3 RVSS	PCVP-HSP-3
	C-1088	1"	FUTURE HIGH SERVICE PUMP NO.4 RVSS	FUTURE CPB-HSP-4
	C-1089	1"	FUTURE HIGH SERVICE PUMP NO.5 RVSS	FUTURE CPB-HSP-5
	P-1054	2"	HIGH SERVICE PUMP NO.1 RVSS	HIGH SERVICE PUMP NO.1
	P-1055	2"	HIGH SERVICE PUMP NO.1 RVSS	HIGH SERVICE PUMP NO.1
	P-1058	2"	HIGH SERVICE PUMP NO.2 RVSS	HIGH SERVICE PUMP NO.2
	P-1059	2"	HIGH SERVICE PUMP NO.2 RVSS	HIGH SERVICE PUMP NO.2
	P-1062	2"	HIGH SERVICE PUMP NO.3 RVSS	HIGH SERVICE PUMP NO.3
	P-1063	2"	HIGH SERVICE PUMP NO.3 RVSS	HIGH SERVICE PUMP NO.3
	P-1066	2"	FUTURE HIGH SERVICE PUMP NO.4 RVSS	FUTURE HIGH SERVICE PUMP NO.4
	P-1067	2"	FUTURE HIGH SERVICE PUMP NO.4 RVSS	FUTURE HIGH SERVICE PUMP NO.4
	P-1070	2"	FUTURE HIGH SERVICE PUMP NO.5 RVSS	FUTURE HIGH SERVICE PUMP NO.5
	P-1071	2"	FUTURE HIGH SERVICE PUMP NO.5 RVSS	FUTURE HIGH SERVICE PUMP NO.5
Q	I-1053	1"	PLC-1	PIT-180
	I-1054	1"	PLC-1	FIT-167
	I-1060	1"	PLC-1	FIT-187
	P-1186	1"	LP-RO-1	FIT-167 & PIT180
	P-1190	1"	LP-RO-1	FIT-187
	P-1213	1"	LP-RO-2	CHEMICAL FEED VAULT & SAMPLE MH
	P-1214	1"	LP-RO-2	FINISHED WATER METER VAUT
	P-1219	1"	LP-RO-2	BACKFLOW PREVENTER VAULT
R	I-1053	1"	PLC-1	PIT-180
	I-1054	1"	PLC-1	FIT-167
	P-1186	1"	LP-RO-1	FIT-167 & PIT180
	P-1213	1"	LP-RO-2	CHEMICAL FEED VAULT & SAMPLE MH
	P-1214	1"	LP-RO-2	FINISHED WATER METER VAUT
S	I-1053	1"	PLC-1	PIT-180
	P-1186	1"	LP-RO-1	FIT-167 & PIT180
	P-1213	1"	LP-RO-2	CHEMICAL FEED VAULT & SAMPLE MH
T	I-1053	1"	PLC-1	PIT-180
	P-1186	1"	LP-RO-1	FIT-167 & PIT180
	P-1213	1"	LP-RO-2	CHEMICAL FEED VAULT & SAMPLE MH
U	I-1060	1"	PLC-1	FIT-187
	P-1190	1"	LP-RO-1	FIT-187
	P-1219	1"	LP-RO-2	BACKFLOW PREVENTER VAULT
V	C-1118	2"	NETWORK RM 112	SERVICE HAND HOLE
	C-1119	2"	NETWORK RM 112	SERVICE HAND HOLE
	C-1090	3/4"	ACCESS CONTROL PANEL RM 112	GATE OPERATOR
	I-1018	1"	FIT-101	FE-101
	P-1211	1"	LP-RO-2	RAW WATER VAULT
	P-1201	1"	LP-RO-1	GATE CONTROLLER
W	I-1018	1"	FIT-101	FE-101
	P-1211	1"	LP-RO-2	RAW WATER VAULT
X	C-1118	2"	NETWORK RM 112	SERVICE HAND HOLE
	C-1119	2"	NETWORK RM 112	SERVICE HAND HOLE
	C-1090	3/4"	ACCESS CONTROL PANEL RM 112	GATE OPERATOR
	P-1201	1"	LP-RO-1	GATE CONTROLLER

DUCTBANK NO.	CONDUIT	SIZE	FROM	TO
Y	C-1118	2"	NETWORK RM 112	SERVICE HAND HOLE
	C-1119	2"	NETWORK RM 112	SERVICE HAND HOLE
Z	I-1051	1"	PLC-1	LIT-161
	P-1185	1"	LP-RO-1	LIT-161
AA	C-1034	1"	PLC-1	FLUORIDE SKID
	C-1035	1"	PLC-1	FSH-188
	C-1038	3/4"	PLC-1	YA-503,504
	I-1065	1"	PLC-1	LIT-189
	I-1067	1-1/2"	PLC-1	FLUORIDE SKID
	I-1068	1"	PLC-1	FIT-191
	I-1074	1"	PLC-1	LIT-501
	I-1076	1"	PLC-1	LIT-502
	P-2058	1-1/2"	PP-CAL	FLUORIDE FACILITY WATER HEATER
	P-2062	1-1/2"	LP-CAL	FLUORIDE FACILITY PANEL LP-FLUOR
AB	C-1001	2"	PLC-1	PLC-4
	C-1002	2"	PLC-1	PLC-4
	P-1075	3"	SWBD-RO	PP-CAL
	P-1076	3"	SWBD-RO	PP-CAL
	P-2058	1-1/2"	PP-CAL	FLUORIDE FACILITY WATER HEATER
	P-2062	1-1/2"	LP-CAL	FLUORIDE FACILITY PANEL LP-FLUOR

REVISIONS

THE WOOTEN COMPANY
120 North Boylan Avenue Raleigh, NC 27603-1423
919.828.0531 Fax 919.831.1589
License Number: F-0115

BRUNSWICK REGIONAL WATER AND SEWER H2GO
BRUNSWICK COUNTY NORTH CAROLINA

CONTRACT No. 4
REVERSE OSMOSIS WATER TREATMENT PLANT

ELECTRICAL
RO TREATMENT PLANT
DUCTBANK SCHEDULES

NORTH CAROLINA PROFESSIONAL ENGINEER 16765 ROBERT E. EGAN

DESIGNED BY: JJS/REE
DRAWN BY: PMD/EML
CHECKED BY: REE
PROJECT NO.: 3081-AB
DATE: JUNE 7, 2020
SCALE: AS NOTED

SHEET 95 OF 181

E012

pdf2013.pltcfg
29.9999 * / in.
began
6/3/2020 9:52:28 AM
T:\Projects\Brunswick_Regional_W&S_H2GO-3081\AB-Water_Supply&Treatment_Plant\Sheets\WTP\Electrical\RO Plant Elect Sheets.dgn

DocuSign Envelope ID: 4D5279CF-D412-45C6-8AD7-ED4B330F8B61

E040 Well No.1 Electrical Plan

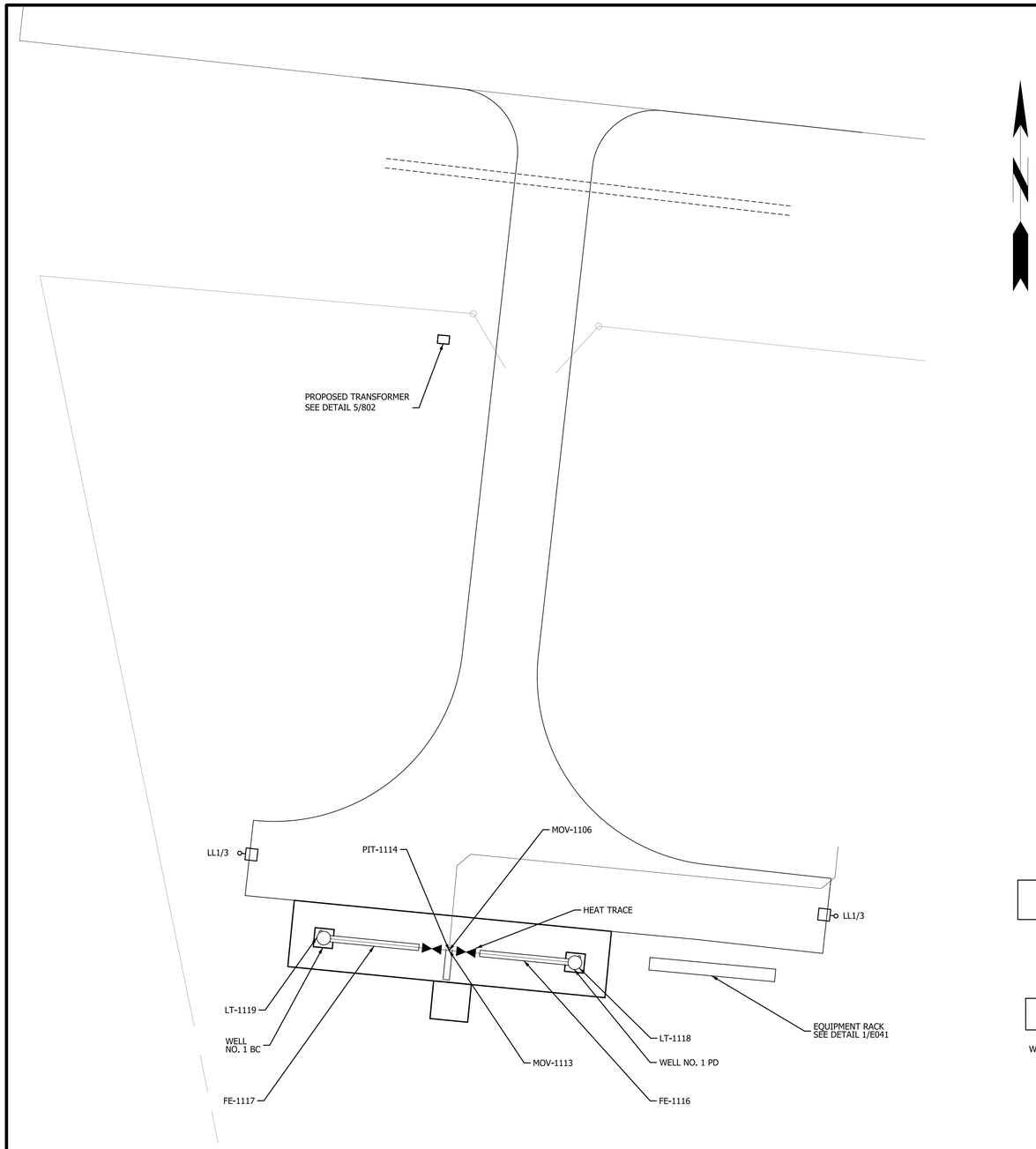

1 E040 ELECTRICAL-WELL SITE NO. 1
SCALE: 1" = 10'-0"

10' 5' 0 10' 20' 30'
SCALE: 1" = 10'

NOTES:

1. CONTRACTOR SHALL COORDINATE ALL ELECTRICAL UTILITY METERING EQUIPMENT WITH THE LOCAL ELECTRICAL UTILITY. COORDINATION SHALL INCLUDE, BUT NOT BE LIMITED TO PRIMARY CONDUIT, SECONDARY CONDUIT & WIRE, METERING CABINET & EQUIPMENT, AND SECONDARY DISCONNECTING MEANS. ALL COSTS RELATED TO UTILITY REQUIREMENTS SHALL BE THE SOLE RESPONSIBILITY OF THE CONTRACTOR. COORDINATE WITH UTILITY AND OWNER FOR LOCATION OF METERING EQUIPMENT. REFERENCE SPECIFICATION 16210 FOR FURTHER INFORMATION.
2. GENERATOR CONNECTION CABINET. UNION CONNECTOR MODEL# GCP-N-O-5-400-1-0-3-6.

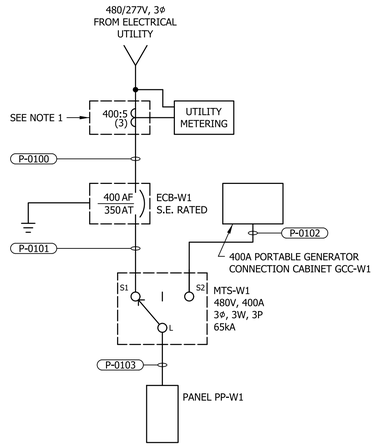

WELL SITE NO.1
SINGLE LINE DIAGRAM

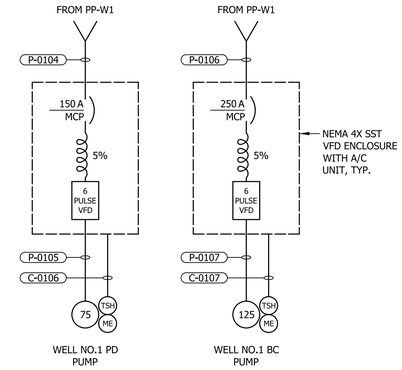

WELL NO.1 PUMPS
RISER DIAGRAM

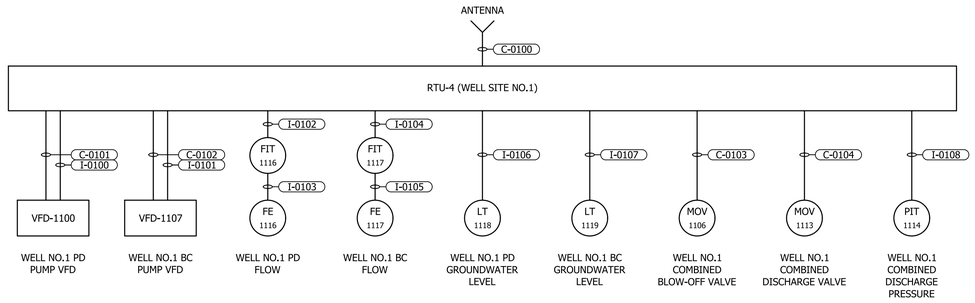

RTU-4
CONTROL ONE-LINE DIAGRAM

REVISIONS

THE WOOTEN COMPANY
120 North Boylan Avenue Raleigh, NC 27603-1423
919.828.0531 fax 919.834.3589
License Number: F-0115

BRUNSWICK REGIONAL WATER AND SEWER H2GO
BRUNSWICK COUNTY NORTH CAROLINA
CONTRACT No. 4
REVERSE OSMOSIS WATER TREATMENT PLANT
ELECTRICAL - WELL SITE NO. 1

NORTH CAROLINA PROFESSIONAL ENGINEER 16765 DocuSigned by: ROBERT E. EGAN

DESIGNED BY:	JJS/REE
DRAWN BY:	PMD/EML
CHECKED BY:	REE
PROJECT NO.:	3081-AB
DATE:	JUNE 7, 2020
SCALE:	AS NOTED

SHEET 96 OF 181

E040

pdf2013.pltcfg
10:0 '-" / in.
began
6/2/2020 1:33:58 PM
T:\Projects\Brunswick_Regional_W&S_H2GO-3081\AB-Water_Supply&Treatment_Plant\Sheets\Wells\Electrical\Electrical Sheets Well Sites.dgn

DocuSign Envelope ID: 4D5279CF-D412-45C6-8AD7-ED4B330F8B61

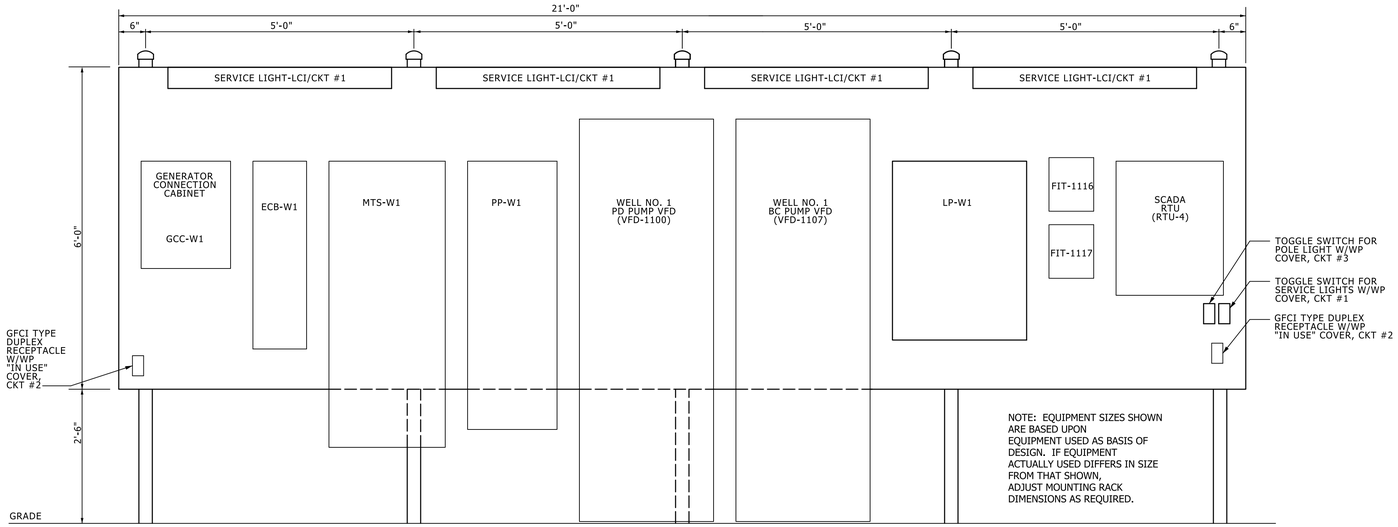

1 EQUIPMENT RACK ELEVATION
E041 NOT TO SCALE

NOTES:

1. 2#12, #12GND, 3/4" C

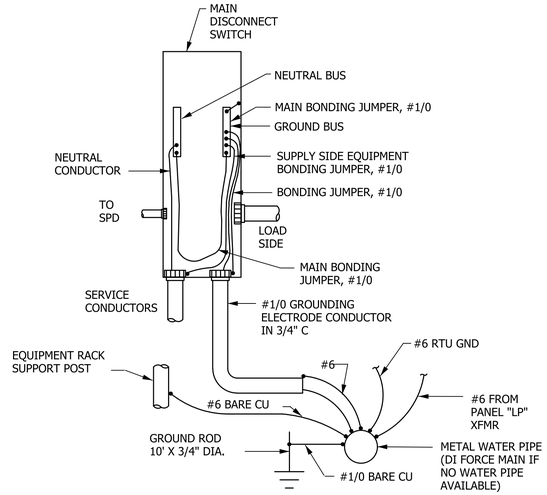

2 SERVICE GROUNDING AND BONDING DETAIL
E041 NOT TO SCALE

PANEL PP-W1 — 480 VOLTS, 3 PHASE, 3 WIRE — MAIN BREAKER 400A 3P — TYPE: NEMA 4X SST — MOUNT: SURFACE

DESCRIPTION	WIRE	TRIP	POLE	No.	VOLT-AMPERES A	VOLT-AMPERES B	VOLT-AMPERES C	VOLT-AMPERES A	VOLT-AMPERES B	VOLT-AMPERES C	No.	POLE	TRIP	WIRE	DESCRIPTION
WELL NO.1 PD PUMP VFD	P-0104	150	3	1	26,700			43,300			2				
				3		26,700			43,300		4	3	250	P-0106	WELL NO.1 BC PUMP VFD
				5			26,700			43,300	6				
MOV-1106	P-0109	20	3	7	750			750			8				
				9		750			750		10	3	20	P-0110	MOV-1113
				11			750			750	12				
SPARE		20	3	13	---			1,060			14				
				15		---			1,200		16	3	40	P-0108	LP-W1
				17			---			1,500	18				
SPACE				19	---			---			20				
				21		---			---		22				SPACE
				23			---			---	24				
SPACE				25	---			---			26				
				27		---			---		28				SPACE
				29			---			---	30				
				TOTAL	27,450	27,450	27,450	45,110	45,250	45,550	TOTAL				
					PHASE TOTAL			TOTAL LOAD							
					72,560	72,700	73,000	218,260							

NOTES:
*22kAIC
*SPD - 200kA

TOTAL LOAD (AMPS)
262.5
65.6%

COMBINATION POWER UNIT LP-W1 — 480-208/120 VOLTS, 3 PHASE, 4 WIRE — 40A PRIMARY MAIN BREAKER (480V) — 50A SECONDARY MAIN BREAKER (208V) — TYPE: NEMA 3RX SST — MOUNT: SURFACE

DESCRIPTION	WIRE	TRIP	POLE	No.	VOLT-AMPERES A	VOLT-AMPERES B	VOLT-AMPERES C	VOLT-AMPERES A	VOLT-AMPERES B	VOLT-AMPERES C	No.	POLE	TRIP	WIRE	DESCRIPTION
LIGHTING - EQPT RACK	SEE NOTE 1	20	1	1	300			360			2	1	20	SEE NOTE 1	RECEPT. - EQPT RACK
LIGHTING - POLE LIGHTS	P-0112	20	1	3		500			700		4	1	20	P-0116	HEAT TRACE
SPARE		20	1	5			---			1,500	6	1	20	P-0113	RTU-4
FIT-1116	P-0114	20	1	7	200			200			8	1	20	P-0115	FIT-1117
SPARE		20	1	9		---			---		10	1	20		SPARE
SPARE		20	1	11			---			---	12	1	20		SPARE
SPACE				13	---			---			14				SPACE
SPACE				15		---			---		16				SPACE
SPACE				17			---			---	18				SPACE
				TOTAL	500	500	0	560	700	1,500	TOTAL				
					PHASE TOTAL			TOTAL LOAD							
					1,060	1,200	1,500	3,760							

NOTES:
*10kAIC
*15kVA COMBINATION POWER UNIT
*SPD - 100kA
PROVIDE GFIE BREAKER FOR HEAT TRACE

TOTAL LOAD (AMPS)
10.4
20.9%

REVISIONS

THE WOOTEN COMPANY
120 North Boylan Avenue Raleigh, NC 27603-1423
919.828.0531 Fax 919.834.5369
License Number: F-0115

BRUNSWICK REGIONAL WATER AND SEWER H2GO
BRUNSWICK COUNTY NORTH CAROLINA
CONTRACT No. 4
REVERSE OSMOSIS WATER TREATMENT PLANT
ELECTRICAL - WELL NO. 1
EQUIPMENT RACK ELEVATION & PANEL SCHEDULE

NORTH CAROLINA PROFESSIONAL ENGINEER 16765 — DocuSigned by: ROBERT E. EGGER — 6/2/2020

DESIGNED BY: JJS/REE
DRAWN BY: PMD/EML
CHECKED BY: REE
PROJECT NO.: 3081-AB
DATE: JUNE 7, 2020
SCALE: AS NOTED

SHEET 97 OF 181

E041

pdf2013.pltcfg
10.0 " = " in.
began 1:33:59 PM 6/2/2020
T:\Projects\Brunswick_Regional_W&S_H2GO-3081\AB-Water_Supply&Treatment_Plant\Sheets\Wells\Electrical\Electrical Sheets Well Sites.dgn

DocuSign Envelope ID: 4D5279CF-D412-45C6-8AD7-ED4B330F8B61

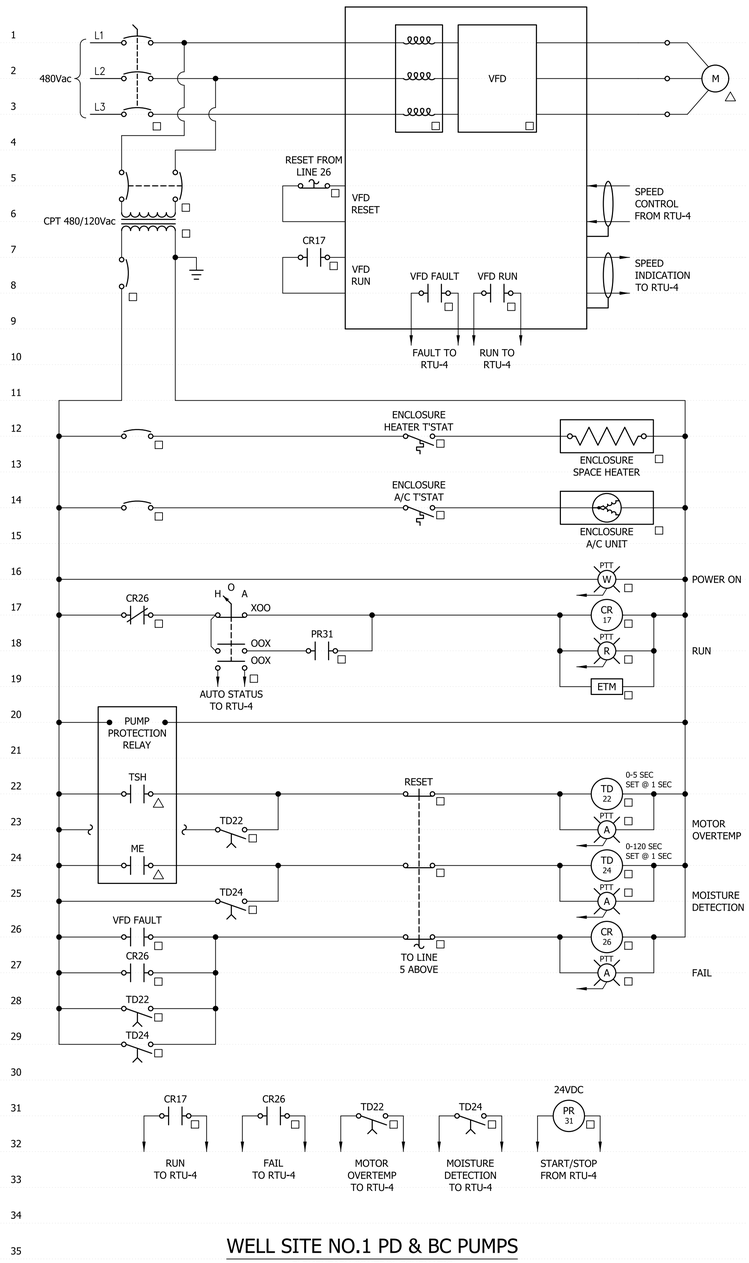

WELL SITE NO.1 PD & BC PUMPS

ELEMENTARY CONTROL SCHEMATIC

CONDUIT NO.	SIZE	FROM	TO	CONDUCTORS	REMARKS
P-0100	4"	ELECTRICAL UTILITY	ECB-W1	4#500kcmil	
P-0101	3"	ECB-W1	MTS-W1	3#500kcmil, #1/0GND	
P-0102	3"	GCC-W1	MTS-W1	3#500kcmil, #1/0GND	
P-0103	3"	MTS-W1	PP-W1	3#500kcmil, #1/0GND	
P-0104	1-1/2"	PP-W1	WELL NO.1 PD PUMP VFD	3#1/0, #6GND	
P-0105	2"	WELL NO.1 PD PUMP VFD	WELL NO.1 PD PUMP	CABLE BY MANUF.	
P-0106	2"	PP-W1	WELL NO.1 BC PUMP VFD	3#4/0, #4GND	
P-0107	2-1/2"	WELL NO.1 BC PUMP VFD	WELL NO.1 BC PUMP	CABLE BY MANUF.	
P-0108	3/4"	PP-W1	LP-W1	3#8, #10GND	
P-0109	1"	PP-W1	MOV-1106	3#12, #12GND	
P-0110	1"	PP-W1	MOV-1113	3#12, #12GND	
P-0111				NOT USED	
P-0112	1"	LP-W1	SITE LIGHTING	2#12, #12GND	
P-0113	3/4"	LP-W1	RTU-4	2#12, #12GND	
P-0114	3/4"	LP-W1	FIT-1116	2#12, #12GND	
P-0115	3/4"	LP-W1	FIT-1117	2#12, #12GND	

CONDUIT NO.	SIZE	FROM	TO	CONDUCTORS	REMARKS
C-0100	2"	RTU-4	ANTENNA	BY SCADA CONTRACT	
C-0101	3/4"	RTU-4	WELL NO.1 PD PUMP VFD	14#14, #14GND	
C-0102	3/4"	RTU-4	WELL NO.1 BC PUMP VFD	14#14, #14GND	
C-0103	1"	RTU-4	MOV-1106	10#14, #14GND	
C-0104	1"	RTU-4	MOV-1113	10#14, #14GND	
C-0105				NOT USED	
C-0106	1-1/2"	WELL NO.1 PD PUMP VFD	WELL NO.1 PD PUMP	CABLE BY MANUF.	
C-0107	1-1/2"	WELL NO.1 BC PUMP VFD	WELL NO.1 BC PUMP	CABLE BY MANUF.	
C-0108				NOT USED	
C-0109				NOT USED	
C-0110				NOT USED	

CONDUIT NO.	SIZE	FROM	TO	CONDUCTORS	REMARKS
I-0100	1"	RTU-4	WELL NO.1 PD PUMP VFD	2-(2/C#16TSH), #14GND	
I-0101	1"	RTU-4	WELL NO.1 BC PUMP VFD	2-(2/C#16TSH), #14GND	
I-0102	3/4"	RTU-4	FIT-1116	2/C#16TSH, #14GND	
I-0103	1"	FIT-1116	FE-1116	CABLE BY MANUF.	
I-0104	1"	RTU-4	FIT-1117	2/C#16TSH, #14GND	
I-0105	1"	FIT-1117	FE-1117	CABLE BY MANUF.	
I-0106	1"	RTU-4	LT-1118	CABLE BY MANUF.	
I-0107	1"	RTU-4	LT-1119	CABLE BY MANUF.	
I-0108	1"	RTU-4	PIT-1114	2/C#16TSH, #14GND	
I-0109				NOT USED	
I-0110				NOT USED	

REVISIONS

THE WOOTEN COMPANY
120 North Boylan Avenue Raleigh, NC 27603-1423
919.828.0531 Fax 919.831.1589
License Number: F-0115

BRUNSWICK REGIONAL WATER AND SEWER H2GO
BRUNSWICK COUNTY NORTH CAROLINA

CONTRACT No. 4

REVERSE OSMOSIS WATER TREATMENT PLANT

ELECTRICAL - WELL NO. 1
ELEMENTARY CONTROL SCHEMATIC,
& CONDUIT & WIRE SCHEDULES

NORTH CAROLINA PROFESSIONAL ENGINEER SEAL 16765 DocuSigned by: ROBERT E. EGGLESTON ENGINEER

DESIGNED BY:	JJS/REE
DRAWN BY:	PMD/EML
CHECKED BY:	REE
PROJECT NO.:	3081-AB
DATE:	JUNE 7, 2020
SCALE:	AS NOTED

SHEET 98 OF 181

E042

pdf2013.pltcfg
10:0 ".* / in.
began
6/2/2020 1:34:10 PM
T:\Projects\Brunswick_Regional_W&S_H2GO-3081|AB-Water_Supply&Treatment_Plant\Sheets\Wells Electrical\Electrical Sheets Well Sites.dgn

DocuSign Envelope ID: 4D5279CF-D412-45C6-8AD7-ED4B330F8B61

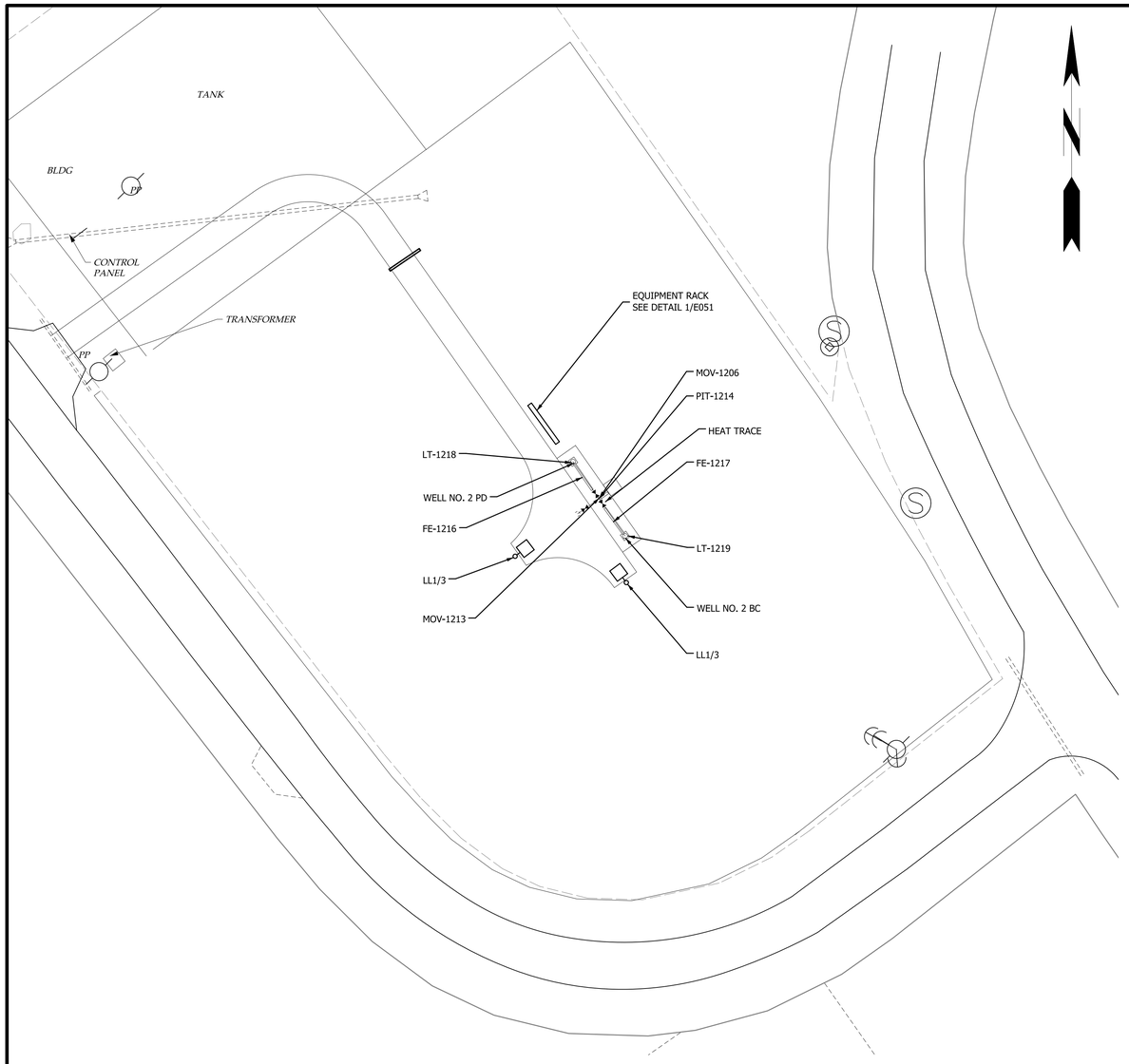

1 E050 ELECTRICAL-WELL SITE NO. 2
SCALE: 1" = 30'-0"

30' 15' 0 30' 60' 90'
SCALE: 1" = 30'

NOTES:

1. CONTRACTOR SHALL COORDINATE ALL ELECTRICAL UTILITY METERING EQUIPMENT WITH THE LOCAL ELECTRICAL UTILITY. COORDINATION SHALL INCLUDE, BUT NOT BE LIMITED TO PRIMARY CONDUIT, SECONDARY CONDUIT & WIRE, METERING CABINET & EQUIPMENT, AND SECONDARY DISCONNECTING MEANS. ALL COSTS RELATED TO UTILITY REQUIREMENTS SHALL BE THE SOLE RESPONSIBILITY OF THE CONTRACTOR. COORDINATE WITH UTILITY AND OWNER FOR LOCATION OF METERING EQUIPMENT. REFERENCE SPECIFICATION 16210 FOR FURTHER INFORMATION.
2. GENERATOR CONNECTION CABINET. UNION CONNECTOR MODEL # GCP-N-O-5-400-1-0-3-6.

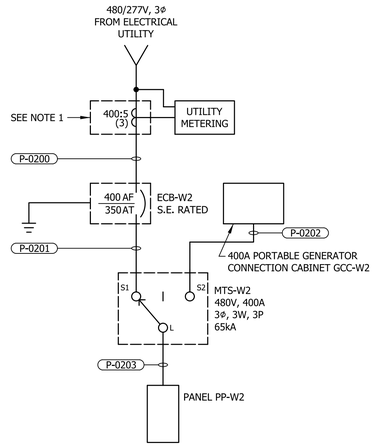

WELL SITE NO.2
SINGLE LINE DIAGRAM

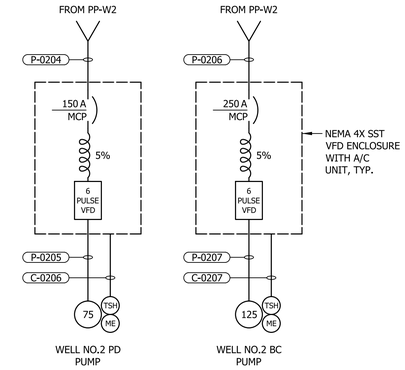

WELL NO.2 PUMPS
RISER DIAGRAM

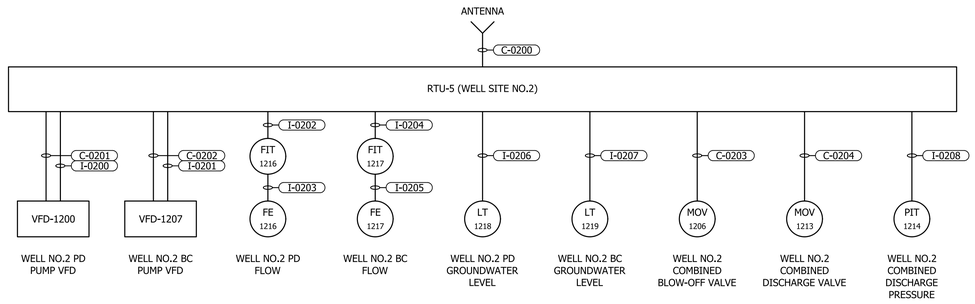

RTU-5
CONTROL ONE-LINE DIAGRAM

REVISIONS

THE WOOTEN COMPANY
120 North Boylan Avenue Raleigh, NC 27603-1423
919.828.0531 Fax 919.834.5369
License Number: F-0115

BRUNSWICK REGIONAL WATER AND SEWER H2GO
BRUNSWICK COUNTY NORTH CAROLINA
CONTRACT No. 4
REVERSE OSMOSIS WATER TREATMENT PLANT
ELECTRICAL-WELL NO. 2
PLAN, SINGLE LINE DIAGRAM, &
CONTROL ONE-LINE DIAGRAM

NORTH CAROLINA PROFESSIONAL ENGINEER SEAL 16765 DocuSigned ROBERT E. EDWARDS

DESIGNED BY: JJS/REE
DRAWN BY: PMD/EML
CHECKED BY: REE
PROJECT NO.: 3081-AB
DATE: JUNE 7, 2020
SCALE: AS NOTED

SHEET 99 OF 181

E050

E050-Well No.2 Electrical Plan

pdf2013.pltcfg
30.0 "=" in.
began
6/2/2020 1:34:17 PM
T:\Projects\Brunswick_Regional_W&S_H2GO-3081\AB-Water_Supply&Treatment_Plant\Sheets\Wells\Electrical\Electrical Sheets Well Sites.dgn

DocuSign Envelope ID: 4D5279CF-D412-45C6-8AD7-ED4B330F8B61

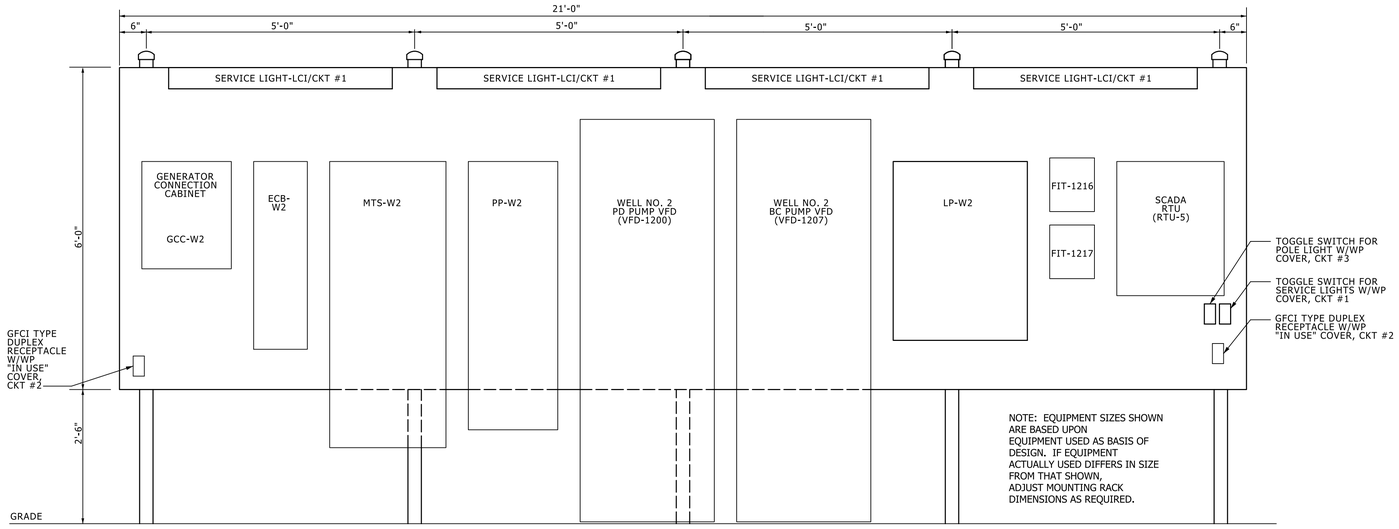

1 E051 EQUIPMENT RACK ELEVATION
NOT TO SCALE

NOTES:

1. 2#12, #12GND, 3/4" C

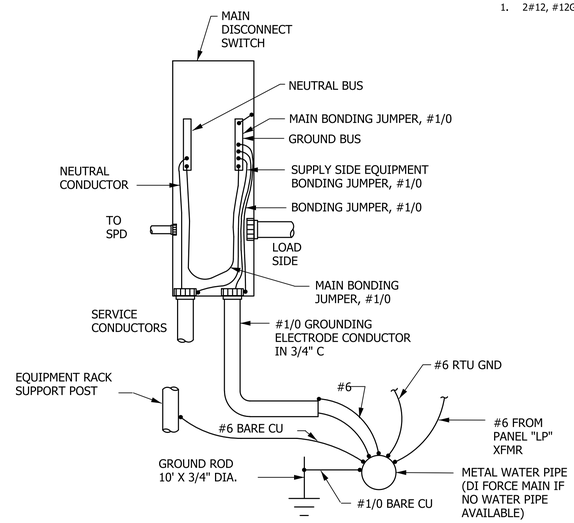

2 E051 SERVICE GROUNDING AND BONDING DETAIL
NOT TO SCALE

PANEL PP-W2 — 480 VOLTS, 3 PHASE, 3 WIRE — MAIN BREAKER 400A 3P — TYPE: NEMA 4X SST — MOUNT: SURFACE

DESCRIPTION	WIRE	TRIP	POLE	No.	VOLT-AMPERES A	VOLT-AMPERES B	VOLT-AMPERES C	VOLT-AMPERES A	VOLT-AMPERES B	VOLT-AMPERES C	No.	POLE	TRIP	WIRE	DESCRIPTION
WELL NO.2 PD PUMP VFD	P-0204	150	3	1	26,700			43,300			2				
				3		26,700			43,300		4	3	250	P-0206	WELL NO.2 BC PUMP VFD
				5			26,700			43,300	6				
MOV-1206	P-0209	20	3	7	750			750			8				
				9		750			750		10	3	20	P-0210	MOV-1213
				11			750			750	12				
SPARE		20	3	13	---			1,060			14				
				15		---			1,200		16	3	40	P-0208	LP-W2
				17			---			1,500	18				
SPACE				19	---			---			20				
				21		---			---		22				SPACE
				23			---			---	24				
SPACE				25	---			---			26				
				27		---			---		28				SPACE
				29			---			---	30				
				TOTAL	27,450	27,450	27,450	45,110	45,250	45,550	TOTAL				
					PHASE TOTAL			TOTAL LOAD							
					72,560	72,700	73,000	218,260							

NOTES:
*22kAIC
*SPD - 200kA

TOTAL LOAD (AMPS)
262.5
65.6%

COMBINATION POWER UNIT LP-W2 — 480-208/120 VOLTS, 3 PHASE, 4 WIRE — 40A PRIMARY MAIN BREAKER (480V) — 50A SECONDARY MAIN BREAKER (208V) — TYPE: NEMA 3RX SST — MOUNT: SURFACE

DESCRIPTION	WIRE	TRIP	POLE	No.	VOLT-AMPERES A	VOLT-AMPERES B	VOLT-AMPERES C	VOLT-AMPERES A	VOLT-AMPERES B	VOLT-AMPERES C	No.	POLE	TRIP	WIRE	DESCRIPTION
LIGHTING - EQPT RACK	SEE NOTE 1	20	1	1	300			360			2	1	20	SEE NOTE 1	RECEPT. - EQPT RACK
LIGHTING - POLE LIGHTS	P-0212	20	1	3		500			700		4	1	20	P-0216	HEAT TRACE
SPARE		20	1	5			---			1,500	6	1	20	P-0213	RTU-5
FIT-1216	P-0214	20	1	7	200			200			8	1	20	P-0215	FIT-1217
SPARE		20	1	9		---			---		10	1	20		SPARE
SPARE		20	1	11			---			---	12	1	20		SPARE
SPACE				13	---			---			14				SPACE
SPACE				15		---			---		16				SPACE
SPACE				17			---			---	18				SPACE
				TOTAL	500	500	0	560	700	1,500	TOTAL				
					PHASE TOTAL			TOTAL LOAD							
					1,060	1,200	1,500	3,760							

NOTES:
*10kAIC
*15kVA COMBINATION POWER UNIT
*SPD - 100kA
PROVIDE GFIE BREAKER FOR HEAT TRACE

TOTAL LOAD (AMPS)
10.4
20.9%

REVISIONS

THE WOOTEN COMPANY
120 North Boylan Avenue Raleigh, NC 27603-1423
919.828.0531 Fax 919.834.5389
License Number: F-0115

BRUNSWICK REGIONAL WATER AND SEWER H2GO
BRUNSWICK COUNTY NORTH CAROLINA
CONTRACT No. 4
REVERSE OSMOSIS WATER TREATMENT PLANT
ELECTRICAL - WELL NO. 2
EQUIPMENT RACK ELEVATION & PANEL SCHEDULE

NORTH CAROLINA PROFESSIONAL ENGINEER SEAL 16765 ROBERT E. EGAN

DESIGNED BY: JJS/REE
DRAWN BY: PMD/EML
CHECKED BY: REE
PROJECT NO.: 3081-AB
DATE: JUNE 7, 2020
SCALE: AS NOTED

SHEET 100 OF 181

E051

pdf2013.pltcfg
30.0 "=" in.
began
6/2/2020 1:34:18 PM
T:\Projects\Brunswick_Regional_W&S_H2GO-3081\AB-Water_Supply&Treatment_Plant\Sheets\Wells\Electrical\Electrical Sheets Well Sites.dgn

DocuSign Envelope ID: 4D5279CF-D412-45C6-8AD7-ED4B330F8B61

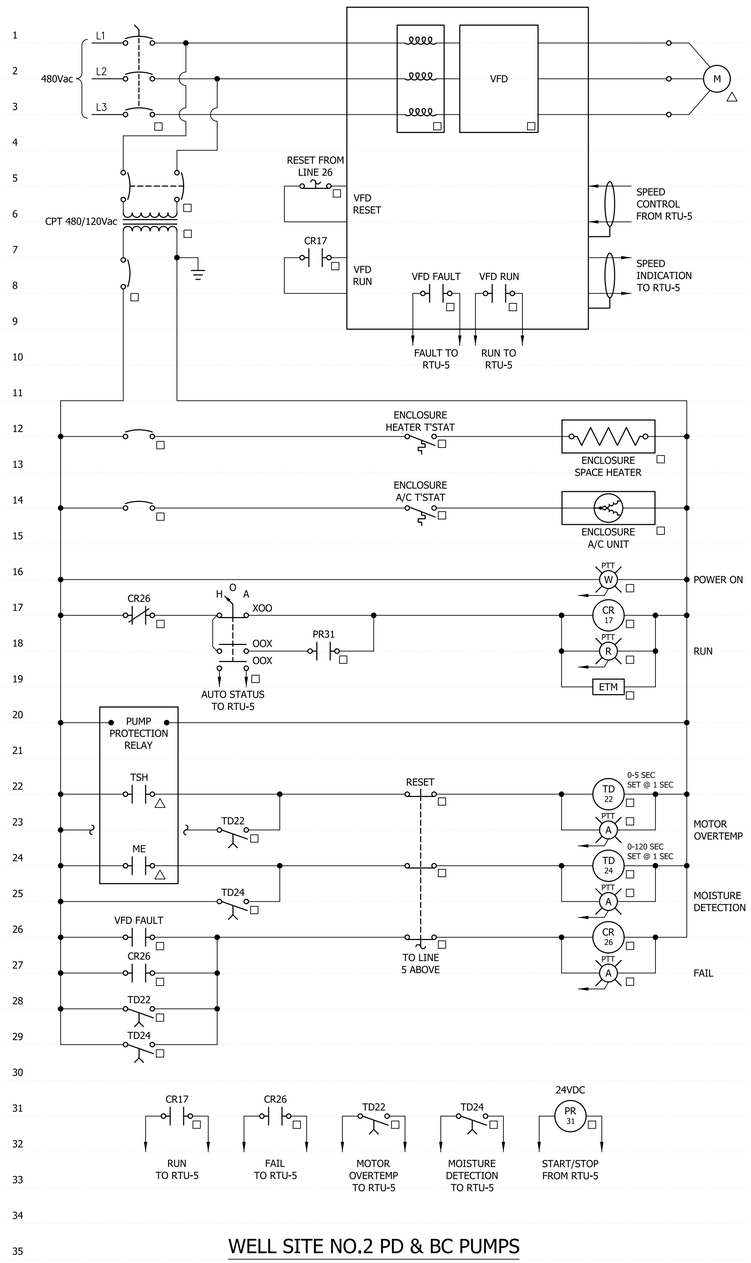

WELL SITE NO.2 PD & BC PUMPS

ELEMENTARY CONTROL SCHEMATIC

CONDUIT NO.	SIZE	FROM	TO	CONDUCTORS	REMARKS
P-0200	4"	ELECTRICAL UTILITY	ECB-W2	4#500kcmil	
P-0201	4"	ECB-W2	MTS-W2	3#500kcmil, #1/0GND	
P-0202	3"	GCC-W2	MTS-W2	3#500kcmil, #1/0GND	
P-0203	3"	MTS-W2	PP-W2	3#500kcmil, #1/0GND	
P-0204	1-1/2"	PP-W2	WELL NO.2 PD PUMP VFD	3#1/0, #6GND	
P-0205	2"	WELL NO.2 PD PUMP VFD	WELL NO.2 PD PUMP	CABLE BY MANUF.	
P-0206	2"	PP-W2	WELL NO.2 BC PUMP VFD	3#4/0, #4GND	
P-0207	2-1/2"	WELL NO.2 BC PUMP VFD	WELL NO.2 BC PUMP	CABLE BY MANUF.	
P-0208	3/4"	PP-W2	LP-W2	3#8, #10GND	
P-0209	1"	PP-W2	MOV-1206	3#12, #12GND	
P-0210	1"	PP-W2	MOV-1213	3#12, #12GND	
P-0211				NOT USED	
P-0212	1"	LP-W2	SITE LIGHTING	2#12, #12GND	
P-0213	3/4"	LP-W2	RTU-5	2#12, #12GND	
P-0214	3/4"	LP-W2	FIT-1216	2#12, #12GND	
P-0215	3/4"	LP-W2	FIT-1217	2#12, #12GND	

CONDUIT NO.	SIZE	FROM	TO	CONDUCTORS	REMARKS
C-0200	2"	RTU-5	ANTENNA	BY SCADA CONTRACT	
C-0201	3/4"	RTU-5	WELL NO.2 PD PUMP VFD	14#14, #14GND	
C-0202	3/4"	RTU-5	WELL NO.2 BC PUMP VFD	14#14, #14GND	
C-0203	1"	RTU-5	MOV-1206	10#14, #14GND	
C-0204	1"	RTU-5	MOV-1213	10#14, #14GND	
C-0205				NOT USED	
C-0206	1-1/2"	WELL NO.2 PD PUMP VFD	WELL NO.2 PD PUMP	CABLE BY MANUF.	
C-0207	1-1/2"	WELL NO.2 BC PUMP VFD	WELL NO.2 BC PUMP	CABLE BY MANUF.	
C-0208				NOT USED	
C-0209				NOT USED	
C-0210				NOT USED	

CONDUIT NO.	SIZE	FROM	TO	CONDUCTORS	REMARKS
I-0200	1"	RTU-5	WELL NO.2 PD PUMP VFD	2-(2/C#16TSH), #14GND	
I-0201	1"	RTU-5	WELL NO.2 BC PUMP VFD	2-(2/C#16TSH), #14GND	
I-0202	3/4"	RTU-5	FIT-1216	2/C#16TSH, #14GND	
I-0203	1"	FIT-1216	FE-1216	CABLE BY MANUF.	
I-0204	1"	RTU-5	FIT-1217	2/C#16TSH, #14GND	
I-0205	1"	FIT-1217	FE-1217	CABLE BY MANUF.	
I-0206	1"	RTU-5	LT-1218	CABLE BY MANUF.	
I-0207	1"	RTU-5	LT-1219	CABLE BY MANUF.	
I-0208	1"	RTU-5	PIT-1214	2/C#16TSH, #14GND	
I-0209				NOT USED	

REVISIONS

THE WOOTEN COMPANY
120 North Boylan Avenue Raleigh, NC 27603-1423
919.828.0531 Fax 919.831.1589
License Number: F-0115

BRUNSWICK REGIONAL WATER AND SEWER H2GO
BRUNSWICK COUNTY NORTH CAROLINA

CONTRACT No. 4
REVERSE OSMOSIS WATER TREATMENT PLANT

ELECTRICAL - WELL NO. 2
ELEMENTARY CONTROL SCHEMATIC,
& CONDUIT & WIRE SCHEDULES



DESIGNED BY: JJS/REE
DRAWN BY: PMD/EML
CHECKED BY: REE
PROJECT NO.: 3081-AB
DATE: JUNE 7, 2020
SCALE: AS NOTED

SHEET 101 OF 181

E052

pdf2013.pltcfg
30:0 "=" in.
began
1:34:26 PM
6/2/2020
T:\Projects\Brunswick_Regional_W&S_H2GO-3081\AB-Water_Supply&Treatment_Plant\Sheets\Wells\Electrical\Electrical Sheets Well Sites.dgn

DocuSign Envelope ID: 4D5279CF-D412-45C6-8AD7-ED4B330F8B61

E060-Well No.3 Electrical Plan

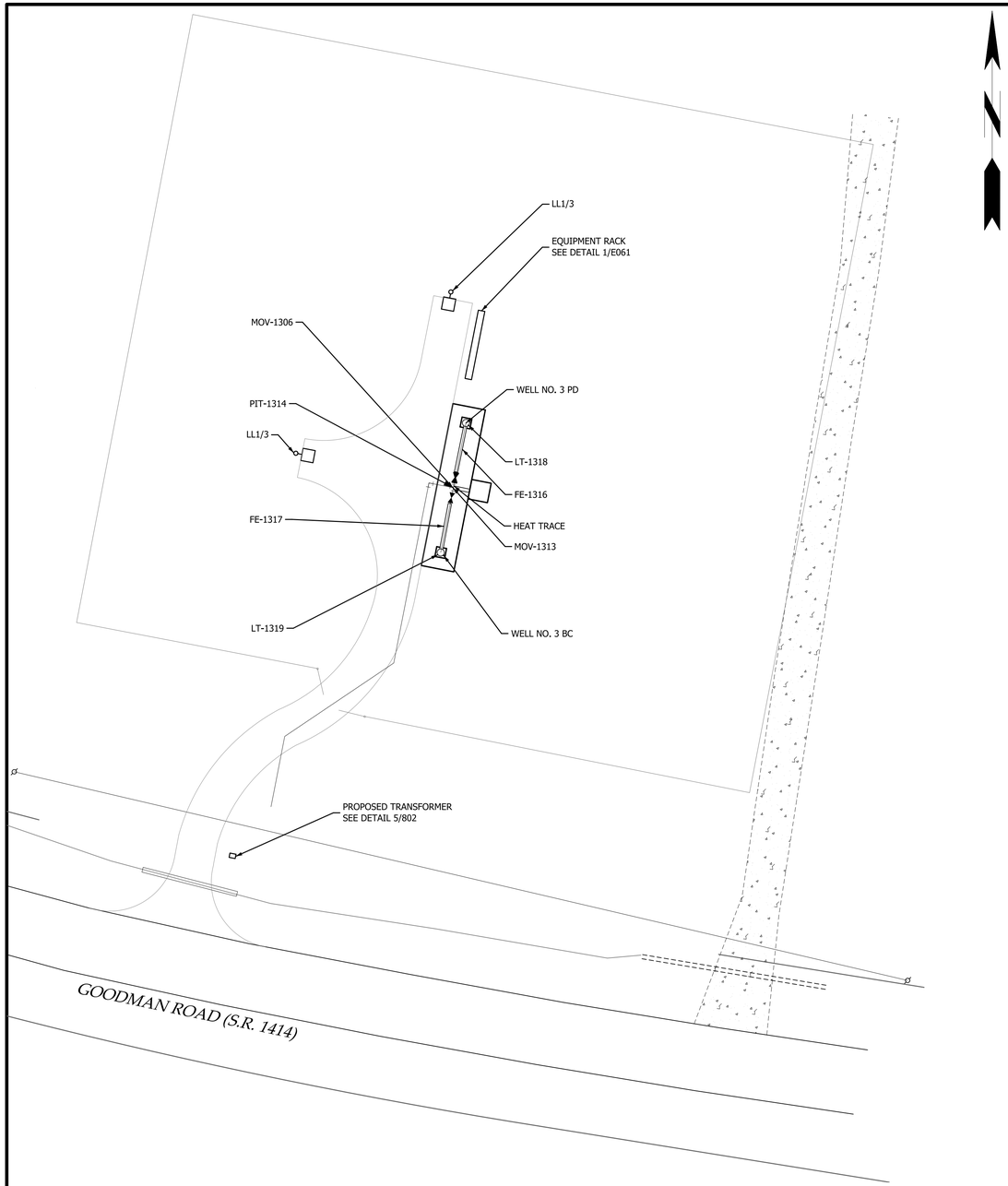

1 E060 ELECTRICAL-WELL SITE NO. 3
SCALE: 1"=20'-0"

20' 10' 0 20' 40' 60'
SCALE: 1" = 20'

NOTES:

1. CONTRACTOR SHALL COORDINATE ALL ELECTRICAL UTILITY METERING EQUIPMENT WITH THE LOCAL ELECTRICAL UTILITY. COORDINATION SHALL INCLUDE, BUT NOT BE LIMITED TO PRIMARY CONDUIT, SECONDARY CONDUIT & WIRE, METERING CABINET & EQUIPMENT, AND SECONDARY DISCONNECTING MEANS. ALL COSTS RELATED TO UTILITY REQUIREMENTS SHALL BE THE SOLE RESPONSIBILITY OF THE CONTRACTOR. COORDINATE WITH UTILITY AND OWNER FOR LOCATION OF METERING EQUIPMENT. REFERENCE SPECIFICATION 16210 FOR FURTHER INFORMATION.
2. GENERATOR CONNECTION CABINET. UNION CONNECTOR MODEL # GCP-N-O-5-400-1-0-3-6.

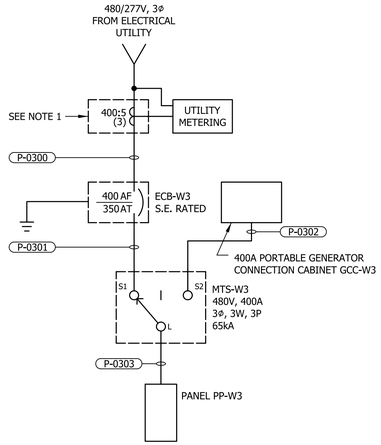

WELL SITE NO.3
SINGLE LINE DIAGRAM

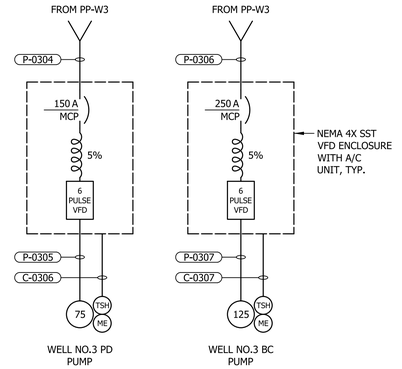

WELL NO.3 PUMPS
RISER DIAGRAM

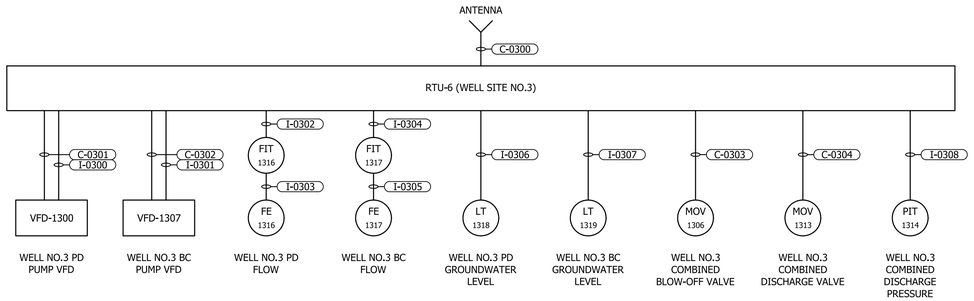

RTU-6
CONTROL ONE-LINE DIAGRAM

REVISIONS

THE WOOTEN COMPANY
120 North Boylan Avenue Raleigh, NC 27603-1423
919.828.0531 fax 919.834.3589
License Number: F-0115

BRUNSWICK REGIONAL WATER AND SEWER H2GO
BRUNSWICK COUNTY NORTH CAROLINA

CONTRACT No. 4
REVERSE OSMOSIS WATER TREATMENT PLANT

ELECTRICAL-WELL NO. 3
PLAN, SINGLE LINE DIAGRAM &
CONTROL ONE-LINE DIAGRAM

NORTH CAROLINA PROFESSIONAL ENGINEER 16765 ROBERT E. EGAN

DESIGNED BY:	JJS/REE
DRAWN BY:	PMD/EML
CHECKED BY:	REE
PROJECT NO.:	3081-AB
DATE:	JUNE 7, 2020
SCALE:	AS NOTED

SHEET 102 OF 181

E060

pdf2013.pltcfg
20.0 sf:si / in.
began
6/2/2020 1:34:33 PM
T:\Projects\Brunswick_Regional_W&S_H2GO-3081\AB-Water_Supply&Treatment_Plant\Sheets\Wells\Electrical\Electrical Sheets Well Sites.dgn

DocuSign Envelope ID: 4D5279CF-D412-45C6-8AD7-ED4B330F8B61

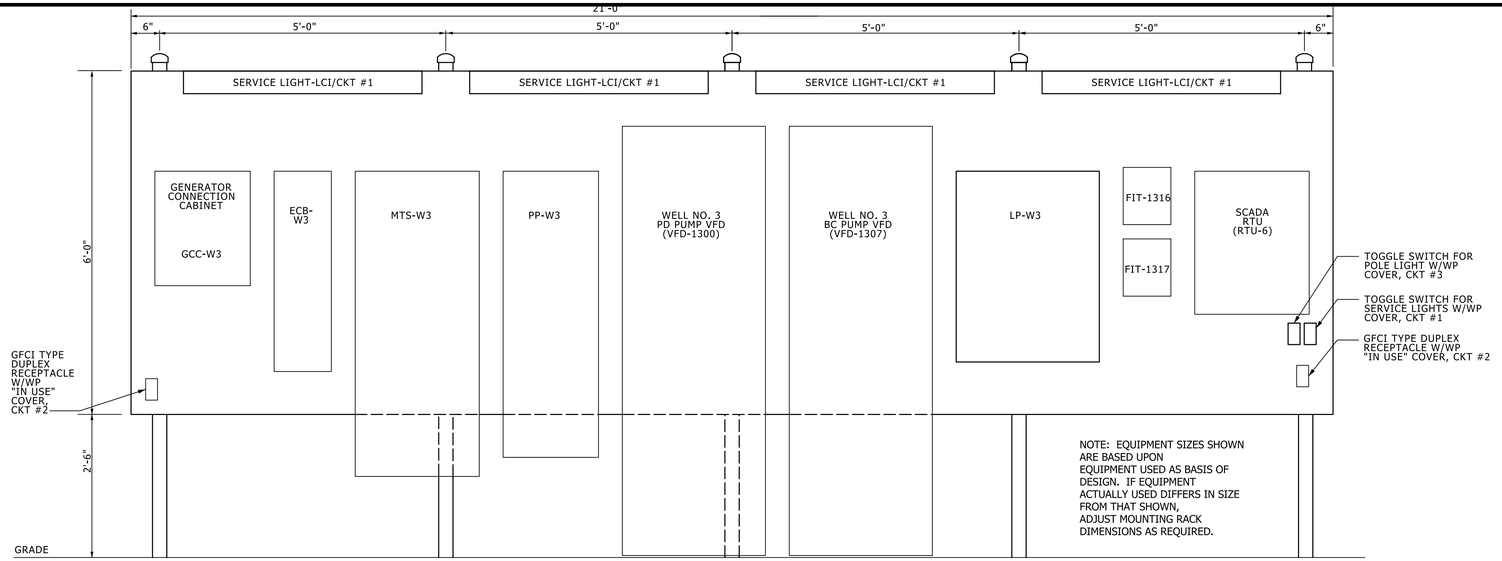

1 E061 EQUIPMENT RACK ELEVATION
NOT TO SCALE

NOTES:

1. 2#12, #12GND, 3/4" C

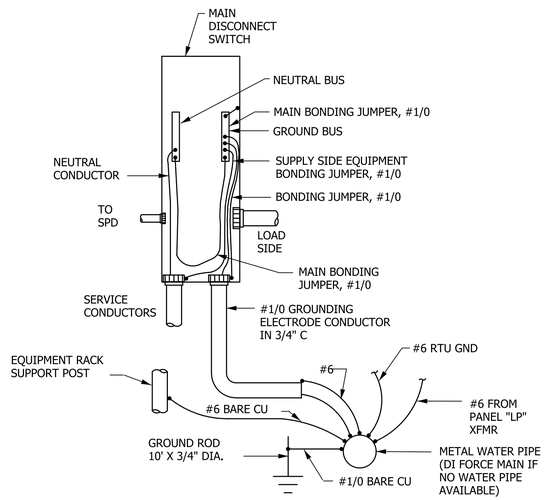

2 E061 SERVICE GROUNDING AND BONDING DETAIL
NOT TO SCALE

480 VOLTS 3 PHASE, 3 WIRE		PANEL PP-W3 MAIN BREAKER 400A 3P										TYPE: NEMA 4X SST MOUNT: SURFACE				
DESCRIPTION	WIRE	TRIP	POLE	No.	VOLT-AMPERES A	VOLT-AMPERES B	VOLT-AMPERES C	VOLT-AMPERES A	VOLT-AMPERES B	VOLT-AMPERES C	No.	POLE	TRIP	WIRE	DESCRIPTION
WELL NO.3 PD PUMP VFD	P-0304	150	3	1	26,700			43,300			2				
				3		26,700			43,300		4	3	250	P-0306	WELL NO.3 BC PUMP VFD
				5			26,700			43,300	6				
MOV-1306	P-0309	20	3	7	750			750			8				
				9		750			750		10	3	20	P-0310	MOV-1313
				11			750			750	12				
SPARE		20	3	13	---			1,060			14				
				15		---			1,200		16	3	40	P-0308	LP-W3
				17			---			1,500	18				
SPACE				19	---			---			20				
				21		---			---		22				SPACE
				23			---			---	24				
SPACE				25	---			---			26				
				27		---			---		28				SPACE
				29			---			---	30				
				TOTAL	27,450	27,450	27,450	45,110	45,250	45,550	TOTAL				
					PHASE TOTAL			TOTAL LOAD							
					72,560	72,700	73,000	218,260							

NOTES:
*22kAIC
*SPD - 200kA

TOTAL LOAD (AMPS)
262.5
65.6%

480-208/120 VOLTS 3 PHASE, 4 WIRE		COMBINATION POWER UNIT LP-W3 40A PRIMARY MAIN BREAKER (480V) 50A SECONDARY MAIN BREAKER (208V)										TYPE: NEMA 3RX SST MOUNT: SURFACE				
DESCRIPTION	WIRE	TRIP	POLE	No.	VOLT-AMPERES A	VOLT-AMPERES B	VOLT-AMPERES C	VOLT-AMPERES A	VOLT-AMPERES B	VOLT-AMPERES C	No.	POLE	TRIP	WIRE	DESCRIPTION
LIGHTING - EQPT RACK	SEE NOTE 1	20	1	1	300			360			2	1	20	SEE NOTE 1	RECEPT. - EQPT RACK
LIGHTING - POLE LIGHTS	P-0312	20	1	3		500			700		4	1	20	P-0316	HEAT TRACE
SPARE		20	1	5			---			1,500	6	1	20	P-0313	RTU-6
FIT-1316	P-0314	20	1	7	200			200			8	1	20	P-0315	FIT-1317
SPARE		20	1	9		---			---		10	1	20		SPARE
SPARE		20	1	11			---			---	12	1	20		SPARE
SPACE				13	---			---			14				SPACE
SPACE				15		---			---		16				SPACE
SPACE				17			---			---	18				SPACE
				TOTAL	500	500	0	560	700	1,500	TOTAL				
					PHASE TOTAL			TOTAL LOAD							
					1,060	1,200	1,500	3,760							

NOTES:
*10kAIC
*15kVA COMBINATION POWER UNIT
*SPD - 100ka
PROVIDE GFIE BREAKER FOR HEAT TRACE

TOTAL LOAD (AMPS)
10.4
20.9%

REVISIONS

THE WOOTEN COMPANY
120 North Boylan Avenue Raleigh, NC 27603-1423
919.828.0531 Fax 919.834.5389
License Number: F-0115

BRUNSWICK REGIONAL WATER AND SEWER H2GO
BRUNSWICK COUNTY NORTH CAROLINA
CONTRACT No. 4
REVERSE OSMOSIS WATER TREATMENT PLANT

ELECTRICAL - WELL NO. 3
EQUIPMENT RACK ELEVATION & PANEL SCHEDULE

NORTH CAROLINA PROFESSIONAL ENGINEER 16765 DocuSigned by: ROBERT E. EDWARDS

DESIGNED BY: JJS/REE
DRAWN BY: PMD/EML
CHECKED BY: REE
PROJECT NO.: 3081-AB
DATE: JUNE 7, 2020
SCALE: AS NOTED

SHEET 103 OF 181

E061

pdf2013.pltcfg
20:0 sf:si / in.
began 1:34:34 PM
6/2/2020
T:\Projects\Brunswick_Regional_W&S_H2GO-3081\AB-Water_Supply&Treatment_Plant\Sheets\Wells\Electrical\Electrical Sheets Well Sites.dgn

DocuSign Envelope ID: 4D5279CF-D412-45C6-8AD7-ED4B330F8B61

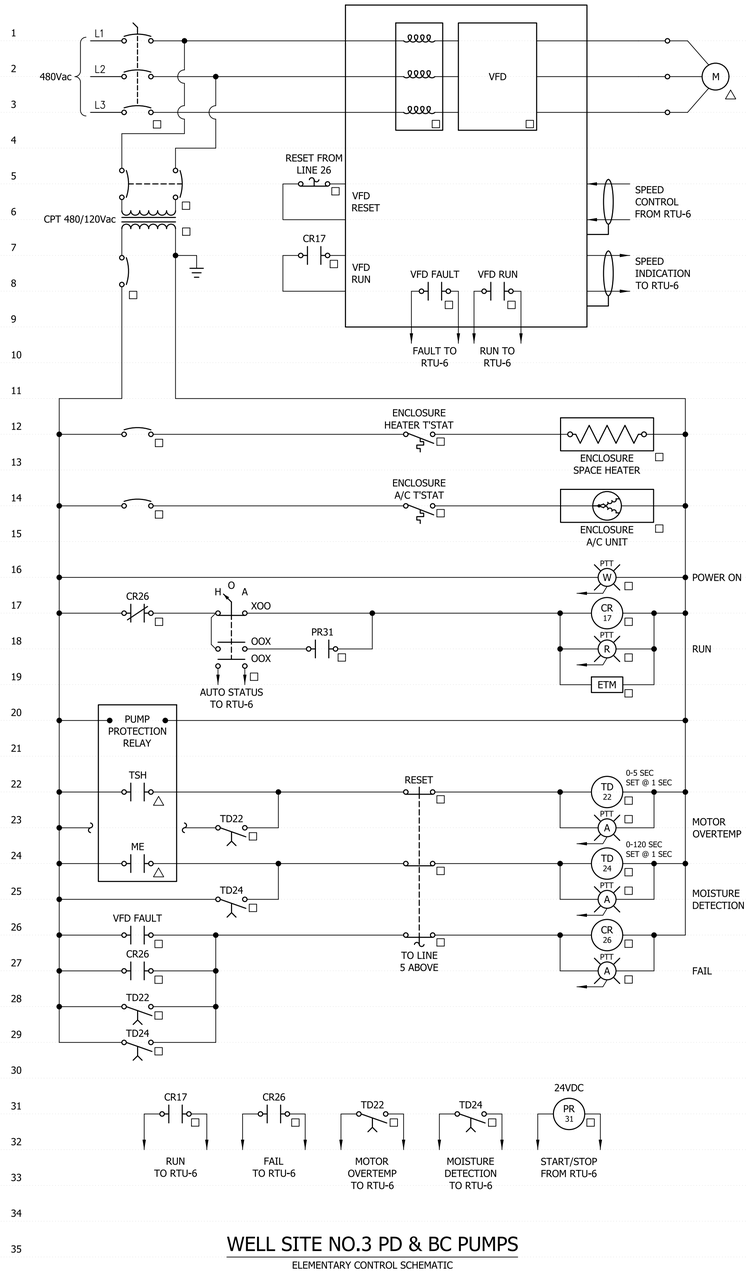

WELL SITE NO.3 PD & BC PUMPS

ELEMENTARY CONTROL SCHEMATIC

CONDUIT NO.	SIZE	FROM	TO	CONDUCTORS	REMARKS
P-0300	4"	ELECTRICAL UTILITY	ECB-W3	4#500kcmil	
P-0301	3"	ECB-W3	MTS-W3	3#500kcmil, #1/0GND	
P-0302	3"	GCC-W3	MTS-W3	3#500kcmil, #1/0GND	
P-0303	3"	MTS-W3	PP-W3	3#500kcmil, #1/0GND	
P-0304	1-1/2"	PP-W3	WELL NO.3 PD PUMP VFD	3#1/0, #6GND	
P-0305	2"	WELL NO.3 PD PUMP VFD	WELL NO.3 PD PUMP	CABLE BY MANUF.	
P-0306	2"	PP-W3	WELL NO.3 BC PUMP VFD	3#4/0, #4GND	
P-0307	2-1/2"	WELL NO.3 BC PUMP VFD	WELL NO.3 BC PUMP	CABLE BY MANUF.	
P-0308	3/4"	PP-W3	LP-W3	3#8, #10GND	
P-0309	1"	PP-W3	MOV-1306	3#12, #12GND	
P-0310	1"	PP-W3	MOV-1313	3#12, #12GND	
P-0311				NOT USED	
P-0312	1"	LP-W3	SITE LIGHTING	2#12, #12GND	
P-0313	3/4"	LP-W3	RTU-6	2#12, #12GND	
P-0314	3/4"	LP-W3	FIT-1316	2#12, #12GND	
P-0315	3/4"	LP-W3	FIT-1317	2#12, #12GND	

CONDUIT NO.	SIZE	FROM	TO	CONDUCTORS	REMARKS
C-0300	2"	RTU-6	ANTENNA	BY SCADA CONTRACT	
C-0301	3/4"	RTU-6	WELL NO.3 PD PUMP VFD	14#14, #14GND	
C-0302	3/4"	RTU-6	WELL NO.3 BC PUMP VFD	14#14, #14GND	
C-0303	1"	RTU-6	MOV-1306	10#14, #14GND	
C-0304	1"	RTU-6	MOV-1313	10#14, #14GND	
C-0305				NOT USED	
C-0306	1-1/2"	WELL NO.3 PD PUMP VFD	WELL NO.3 PD PUMP	CABLE BY MANUF.	
C-0307	1-1/2"	WELL NO.3 BC PUMP VFD	WELL NO.3 BC PUMP	CABLE BY MANUF.	
C-0308				NOT USED	
C-0309				NOT USED	
C-0310				NOT USED	

CONDUIT NO.	SIZE	FROM	TO	CONDUCTORS	REMARKS
I-0300	1"	RTU-6	WELL NO.3 PD PUMP VFD	2-(2/C#16TSH), #14GND	
I-0301	1"	RTU-6	WELL NO.3 BC PUMP VFD	2-(2/C#16TSH), #14GND	
I-0302	3/4"	RTU-6	FIT-1316	2/C#16TSH, #14GND	
I-0303	1"	FIT-1316	FE-1316	CABLE BY MANUF.	
I-0304	1"	RTU-6	FIT-1317	2/C#16TSH, #14GND	
I-0305	1"	FIT-1317	FE-1317	CABLE BY MANUF.	
I-0306	1"	RTU-6	LT-1318	CABLE BY MANUF.	
I-0307	1"	RTU-6	LT-1319	CABLE BY MANUF.	
I-0308	1"	RTU-6	PIT-1314	2/C#16TSH, #14GND	
I-0309				NOT USED	
I-0310				NOT USED	

REVISIONS

THE WOOTEN COMPANY
120 North Boylan Avenue Raleigh, NC 27603-1423
919.828.0531 Fax 919.834.3389
License Number: F-0113

BRUNSWICK REGIONAL WATER AND SEWER H2GO
BRUNSWICK COUNTY NORTH CAROLINA

CONTRACT No. 4
REVERSE OSMOSIS WATER TREATMENT PLANT

ELECTRICAL - WELL NO. 3
ELEMENTARY CONTROL SCHEMATIC,
& CONDUIT & WIRE SCHEDULES

NORTH CAROLINA PROFESSIONAL ENGINEER 16765 DocuSigned by: ROBERT E. EARLEY REGISTERED

DESIGNED BY: JJS/REE
DRAWN BY: PMD/EML
CHECKED BY: REE
PROJECT NO.: 3081-AB
DATE: JUNE 7, 2020
SCALE: AS NOTED

SHEET 104 OF 181

E062

pdf2013.pltcfg
20.0 sf.si / in.
began
6/2/2020 1:34:42 PM
T:\Projects\Brunswick_Regional_W&S_H2GO-3081\AB-Water_Supply&Treatment_Plant\Sheets\Wells\Electrical\Electrical Sheets Well Sites.dgn

DocuSign Envelope ID: 4D5279CF-D412-45C6-8AD7-ED4B330F8B61

E070–Well No.4 Electrical Plan

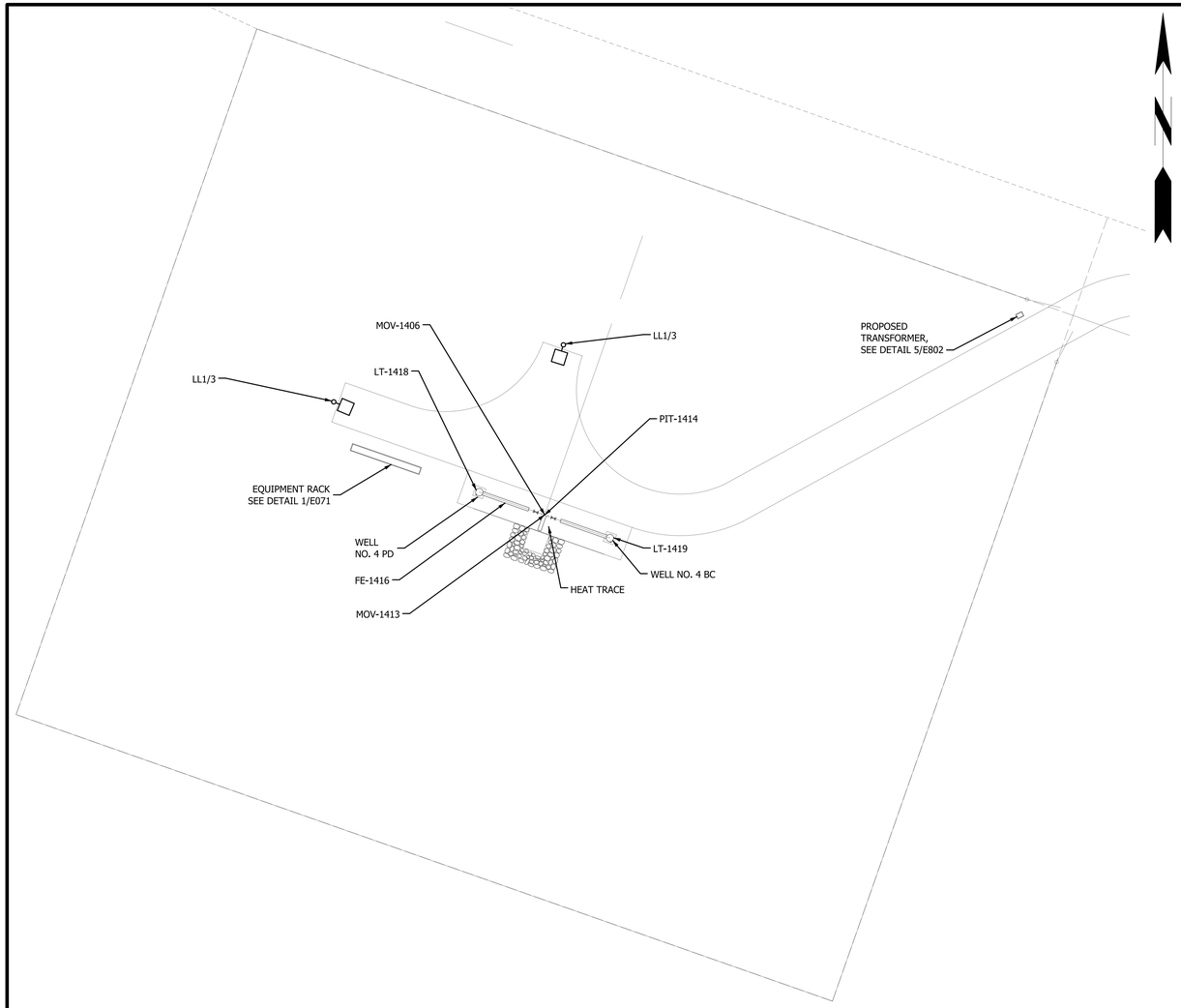

1 E070 ELECTRICAL-WELL SITE NO. 4
SCALE: 1"=20'-0"

NOTES:

1. CONTRACTOR SHALL COORDINATE ALL ELECTRICAL UTILITY METERING EQUIPMENT WITH THE LOCAL ELECTRICAL UTILITY. COORDINATION SHALL INCLUDE, BUT NOT BE LIMITED TO PRIMARY CONDUIT, SECONDARY CONDUIT & WIRE, METERING CABINET & EQUIPMENT, AND SECONDARY DISCONNECTING MEANS. ALL COSTS RELATED TO UTILITY REQUIREMENTS SHALL BE THE SOLE RESPONSIBILITY OF THE CONTRACTOR. COORDINATE WITH UTILITY AND OWNER FOR LOCATION OF METERING EQUIPMENT. REFERENCE SPECIFICATION 16210 FOR FURTHER INFORMATION.
2. GENERATOR CONNECTION CABINET. UNION CONNECTOR MODEL# GCP-N-O-5-400-1-0-3-6.

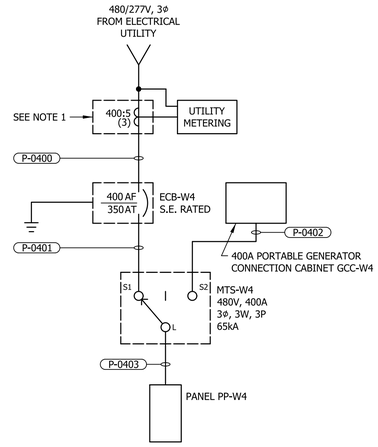

WELL SITE NO.4
SINGLE LINE DIAGRAM

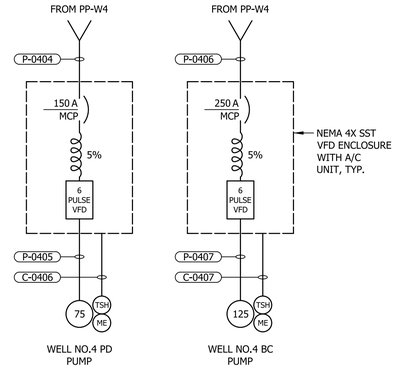

WELL NO.4 PUMPS
RISER DIAGRAM

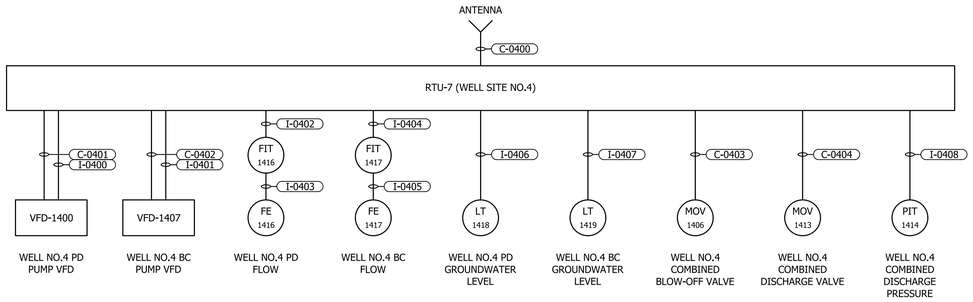

RTU-7
CONTROL ONE-LINE DIAGRAM

20' 10' 0 20' 40' 60'
SCALE: 1" = 20'

REVISIONS

THE WOOTEN COMPANY
120 North Boylan Avenue Raleigh, NC 27603-1423
919.828.0531 fax 919.834.3589
License Number: F-0115

BRUNSWICK REGIONAL WATER AND SEWER H2GO
BRUNSWICK COUNTY NORTH CAROLINA

CONTRACT No. 4
REVERSE OSMOSIS WATER TREATMENT PLANT

ELECTRICAL-WELL NO. 4
PLAN, SINGLE LINE DIAGRAM, &
CONTROL ONE-LINE DIAGRAM

NORTH CAROLINA PROFESSIONAL 16765 ENGINEER ROBERT E. EGAN

DESIGNED BY:	JJS/REE
DRAWN BY:	PMD/EML
CHECKED BY:	REE
PROJECT NO.:	3081-AB
DATE:	JUNE 7, 2020
SCALE:	AS NOTED

SHEET 105 OF 181

E070

pdf2013.pltcfg
20:0 '-" / in.
began
6/2/2020 1:34:50 PM
T:\Projects\Brunswick_Regional_W&S_H2GO-3081\AB-Water_Supply&Treatment_Plant\Sheets\Wells\Electrical\Electrical Sheets Well Sites.dgn

DocuSign Envelope ID: 4D5279CF-D412-45C6-8AD7-ED4B330F8B61

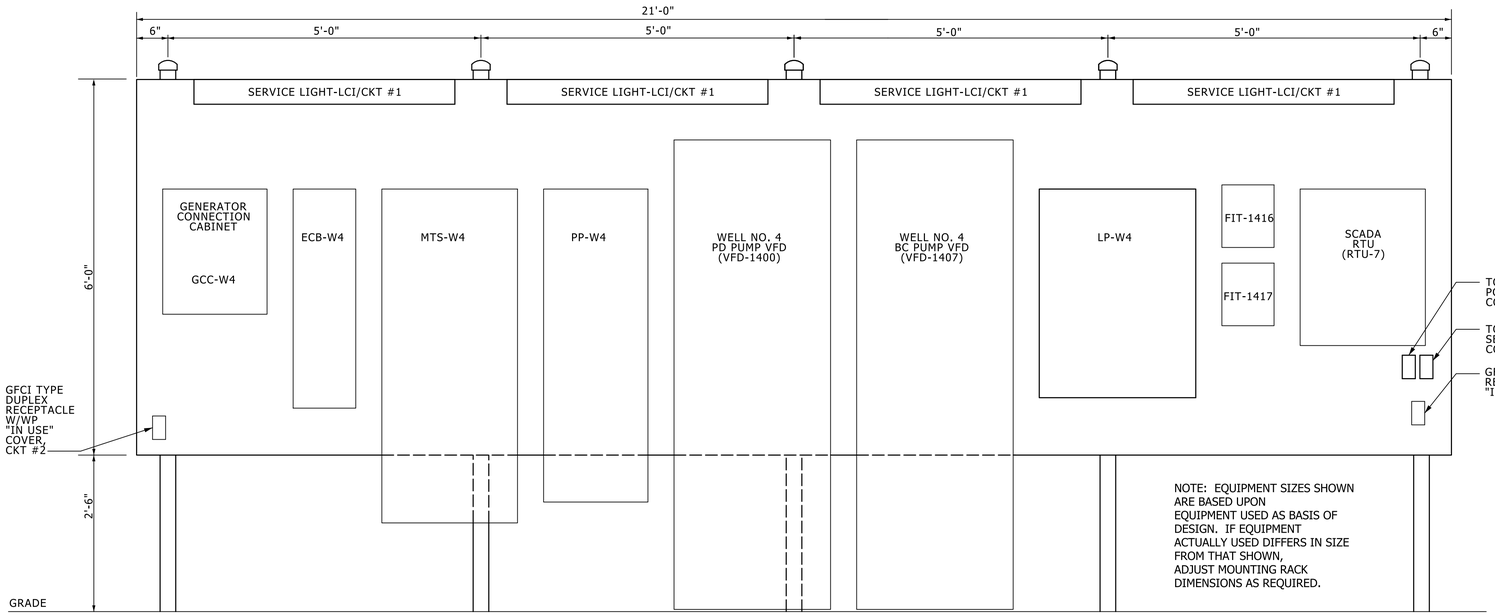

1 E071 EQUIPMENT RACK ELEVATION
NOT TO SCALE

NOTES:

1. 2#12, #12GND, 3/4" C

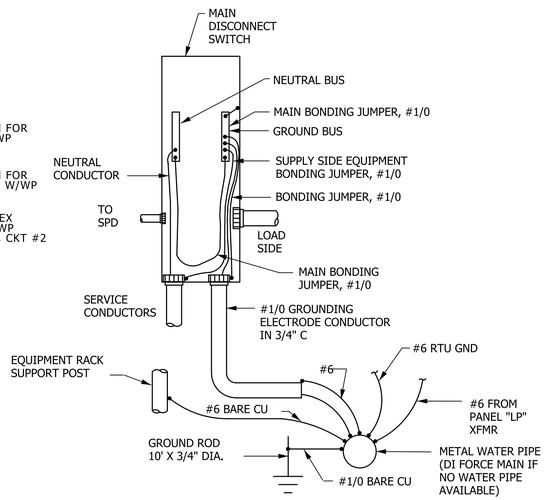

2 E071 SERVICE GROUNDING AND BONDING DETAIL
NOT TO SCALE

480 VOLTS
3 PHASE, 3 WIRE

PANEL PP-W4
MAIN BREAKER
400A 3P

TYPE: NEMA 4X SST
MOUNT: SURFACE

DESCRIPTION	WIRE	TRIP	POLE	No.	VOLT-AMPERES A	VOLT-AMPERES B	VOLT-AMPERES C	VOLT-AMPERES A	VOLT-AMPERES B	VOLT-AMPERES C	No.	POLE	TRIP	WIRE	DESCRIPTION
WELL NO.4 PD PUMP VFD	P-0404	150	3	1	26,700			43,300			2				
				3		26,700			43,300		4	3	250	P-0406	WELL NO.4 BC PUMP VFD
				5			26,700			43,300	6				
MOV-1406	P-0409	20	3	7	750			750			8				
				9		750			750		10	3	20	P-0410	MOV-1413
				11			750			750	12				
SPARE		20	3	13	---			1,060			14				
				15		---			1,200		16	3	40	P-0408	LP-W4
				17			---			1,500	18				
SPACE				19	---			---			20				
				21		---			---		22				SPACE
				23			---			---	24				
SPACE				25	---			---			26				
				27		---			---		28				SPACE
				29			---			---	30				
				TOTAL	27,450	27,450	27,450	45,110	45,250	45,550	TOTAL				
					PHASE TOTAL			TOTAL LOAD							
					72,560	72,700	73,000	218,260							

NOTES:
*22kAIC
*SPD - 200kA

TOTAL LOAD (AMPS)
262.5
65.6%

480-208/120 VOLTS
3 PHASE, 4 WIRE

COMBINATION POWER UNIT LP-W4
40A PRIMARY MAIN BREAKER (480V)
50A SECONDARY MAIN BREAKER (208V)

TYPE: NEMA 3RX SST
MOUNT: SURFACE

DESCRIPTION	WIRE	TRIP	POLE	No.	VOLT-AMPERES A	VOLT-AMPERES B	VOLT-AMPERES C	VOLT-AMPERES A	VOLT-AMPERES B	VOLT-AMPERES C	No.	POLE	TRIP	WIRE	DESCRIPTION
LIGHTING - EQPT RACK	SEE NOTE 1	20	1	1	300			360			2	1	20	SEE NOTE 1	RECEPT. - EQPT RACK
LIGHTING - POLE LIGHTS	P-0412	20	1	3		500			700		4	1	20	P-0416	HEAT TRACE
SPARE		20	1	5			---			1,500	6	1	20	P-0413	RTU-7
FIT-1416	P-0414	20	1	7	200			200			8	1	20	P-0415	FIT-1417
SPARE		20	1	9		---			---		10	1	20		SPARE
SPARE		20	1	11			---			---	12	1	20		SPARE
SPACE				13	---			---			14				SPACE
SPACE				15		---			---		16				SPACE
SPACE				17			---			---	18				SPACE
				TOTAL	500	500	0	560	700	1,500	TOTAL				
					PHASE TOTAL			TOTAL LOAD							
					1,060	1,200	1,500	3,760							

NOTES:
*10kAIC
*15kVA COMBINATION POWER UNIT
*SPD - 100kA
PROVIDE GFIE BREAKER FOR HEAT TRACE

TOTAL LOAD (AMPS)
10.4
20.9%

REVISIONS

THE WOOTEN COMPANY
120 North Boylan Avenue Raleigh, NC 27603-1423
919.828.0531 Fax 919.834.5389
License Number: F-1015

BRUNSWICK REGIONAL WATER AND SEWER H2GO
BRUNSWICK COUNTY NORTH CAROLINA
CONTRACT No. 4
REVERSE OSMOSIS WATER TREATMENT PLANT

ELECTRICAL - WELL NO. 4
EQUIPMENT RACK ELEVATION & PANEL SCHEDULE

NORTH CAROLINA PROFESSIONAL ENGINEER SEAL 16765 DocuSigned by: REGISTERED

DESIGNED BY: JJS/REE
DRAWN BY: PMD/EML
CHECKED BY: REE
PROJECT NO.: 3081-AB
DATE: JUNE 7, 2020
SCALE: AS NOTED

SHEET 106 OF 181

E071

DocuSign Envelope ID: 4D5279CF-D412-45C6-8AD7-ED4B330F8B61

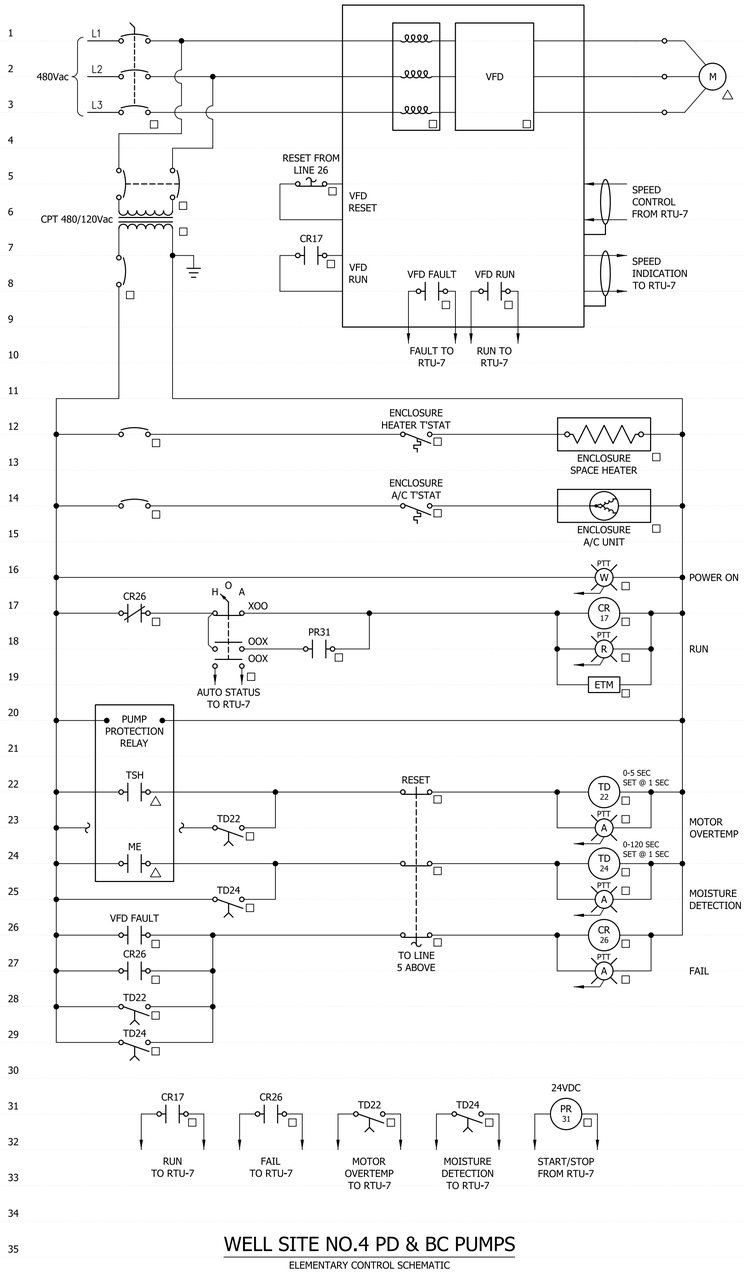

WELL SITE NO.4 PD & BC PUMPS

ELEMENTARY CONTROL SCHEMATIC

CONDUIT NO.	SIZE	FROM	TO	CONDUCTORS	REMARKS
P-0400	4"	ELECTRICAL UTILITY	ECB-W4	4#500kcmil	
P-0401	3"	ECB-W4	MTS-W4	3#500kcmil, #1/0GND	
P-0402	3"	GCC-W4	MTS-W4	3#500kcmil, #1/0GND	
P-0403	3"	MTS-W4	PP-W4	3#500kcmil, #1/0GND	
P-0404	1-1/2"	PP-W4	WELL NO.4 PD PUMP VFD	3#1/0, #6GND	
P-0405	2"	WELL NO.4 PD PUMP VFD	WELL NO.4 PD PUMP	CABLE BY MANUF.	
P-0406	2"	PP-W4	WELL NO.4 BC PUMP VFD	3#4/0, #4GND	
P-0407	2-1/2"	WELL NO.4 BC PUMP VFD	WELL NO.4 BC PUMP	CABLE BY MANUF.	
P-0408	3/4"	PP-W4	LP-W4	3#8, #10GND	
P-0409	1"	PP-W4	MOV-1406	3#12, #12GND	
P-0410	1"	PP-W4	MOV-1413	3#12, #12GND	
P-0411				NOT USED	
P-0412	1"	LP-W4	SITE LIGHTING	2#12, #12GND	
P-0413	3/4"	LP-W4	RTU-7	2#12, #12GND	
P-0414	3/4"	LP-W4	FIT-1416	2#12, #12GND	
P-0415	3/4"	LP-W4	FIT-1417	2#12, #12GND	

CONDUIT NO.	SIZE	FROM	TO	CONDUCTORS	REMARKS
C-0400	2"	RTU-7	ANTENNA	BY SCADA CONTRACT	
C-0401	3/4"	RTU-7	WELL NO.4 PD PUMP VFD	14#14, #14GND	
C-0402	3/4"	RTU-7	WELL NO.4 BC PUMP VFD	14#14, #14GND	
C-0403	1"	RTU-7	MOV-1406	10#14, #14GND	
C-0404	1"	RTU-7	MOV-1413	10#14, #14GND	
C-0405				NOT USED	
C-0406	1-1/2"	WELL NO.4 PD PUMP VFD	WELL NO.4 PD PUMP	CABLE BY MANUF.	
C-0407	1-1/2"	WELL NO.4 BC PUMP VFD	WELL NO.4 BC PUMP	CABLE BY MANUF.	
C-0408				NOT USED	
C-0409				NOT USED	
C-0410				NOT USED	
C-0411				NOT USED	
C-0412				NOT USED	
C-0413				NOT USED	
C-0414				NOT USED	
C-0415				NOT USED	

CONDUIT NO.	SIZE	FROM	TO	CONDUCTORS	REMARKS
I-0400	1"	RTU-7	WELL NO.4 PD PUMP VFD	2-(2/C#16TSH), #14GND	
I-0401	1"	RTU-7	WELL NO.4 BC PUMP VFD	2-(2/C#16TSH), #14GND	
I-0402	3/4"	RTU-7	FIT-1416	2/C#16TSH, #14GND	
I-0403	1"	FIT-1416	FE-1416	CABLE BY MANUF.	
I-0404	1"	RTU-7	FIT-1417	2/C#16TSH, #14GND	
I-0405	1"	FIT-1417	FE-1417	CABLE BY MANUF.	
I-0406	1"	RTU-7	LT-1418	CABLE BY MANUF.	
I-0407	1"	RTU-7	LT-1419	CABLE BY MANUF.	
I-0408	1"	RTU-7	PIT-1414	2/C#16TSH, #14GND	
I-0409				NOT USED	
I-0410				NOT USED	

REVISIONS

THE WOOTEN COMPANY
120 North Boylan Avenue Raleigh, NC 27603-1423
919.828.0531 Fax 919.834.5389
License Number: F-0113

BRUNSWICK REGIONAL WATER AND SEWER H2GO
BRUNSWICK COUNTY NORTH CAROLINA

CONTRACT No. 4
REVERSE OSMOSIS WATER TREATMENT PLANT

ELECTRICAL - WELL NO. 4
ELEMENTARY CONTROL SCHEMATIC,
& CONDUIT & WIRE SCHEDULES



DESIGNED BY: JJS/REE
DRAWN BY: PMD/EML
CHECKED BY: REE
PROJECT NO.: 3081-AB
DATE: JUNE 7, 2020
SCALE: AS NOTED

SHEET 107 OF 181

E072

E072 - Well No.4 Schematic and Schedules

pdf2013.pltcfg
20:0 ".0" / in.
began
6/2/2020 1:34:59 PM
T:\Projects\Brunswick_Regional_W&S_H2GO-3081\AB-Water_Supply&Treatment_Plant\Sheets\Wells\Electrical\Electrical Sheets Well Sites.dgn

DocuSign Envelope ID: 4D5279CF-D412-45C6-8AD7-ED4B330F8B61

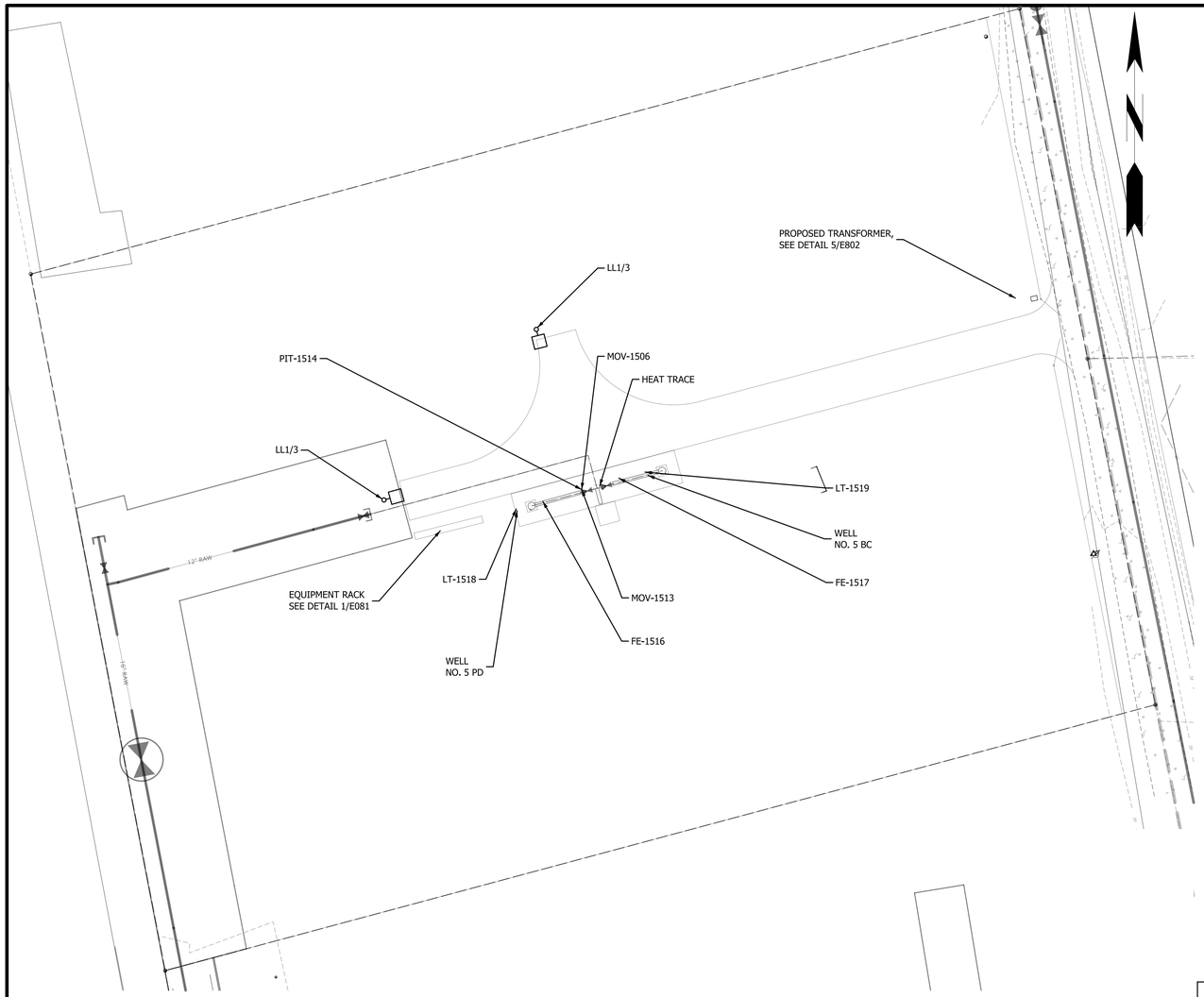

1 E080 ELECTRICAL-WELL SITE NO. 5
SCALE: 1"=20'-0"

NOTES:

1. CONTRACTOR SHALL COORDINATE ALL ELECTRICAL UTILITY METERING EQUIPMENT WITH THE LOCAL ELECTRICAL UTILITY. COORDINATION SHALL INCLUDE, BUT NOT BE LIMITED TO PRIMARY CONDUIT, SECONDARY CONDUIT & WIRE, METERING CABINET & EQUIPMENT, AND SECONDARY DISCONNECTING MEANS. ALL COSTS RELATED TO UTILITY REQUIREMENTS SHALL BE THE SOLE RESPONSIBILITY OF THE CONTRACTOR. COORDINATE WITH UTILITY AND OWNER FOR LOCATION OF METERING EQUIPMENT. REFERENCE SPECIFICATION 16210 FOR FURTHER INFORMATION.
2. GENERATOR CONNECTION CABINET. UNION CONNECTOR MODEL # GCP-N-O-5-400-1-0-3-6.

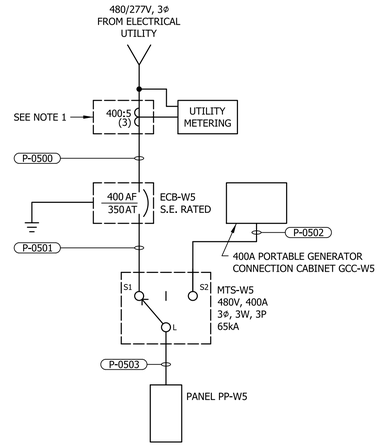

WELL SITE NO.5
SINGLE LINE DIAGRAM

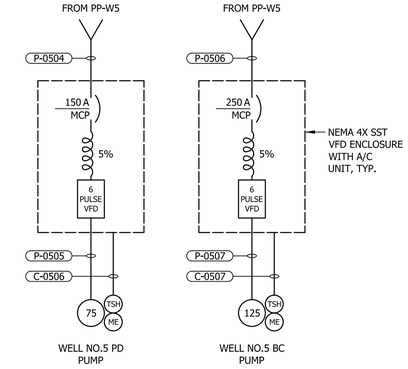

WELL NO.5 PUMPS
RISER DIAGRAM

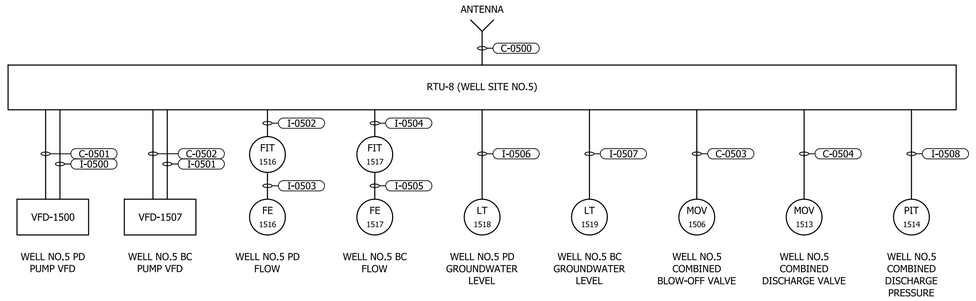

RTU-8
CONTROL ONE-LINE DIAGRAM

20' 10' 0 20' 40' 60'
SCALE: 1" = 20'

REVISIONS

THE WOOTEN COMPANY
120 North Boylan Avenue Raleigh, NC 27603-1423
919.828.0531 fax 919.834.3589
License Number: F-0115

BRUNSWICK REGIONAL WATER AND SEWER H2GO
BRUNSWICK COUNTY NORTH CAROLINA
CONTRACT No. 4
REVERSE OSMOSIS WATER TREATMENT PLANT
ELECTRICAL-WELL NO. 5
PLAN, SINGLE LINE DIAGRAM, &
CONTROL ONE-LINE DIAGRAM

NORTH CAROLINA PROFESSIONAL ENGINEER 16765 ROBERT E. EGAN

DESIGNED BY:	JJS/REE
DRAWN BY:	PMD/EML
CHECKED BY:	REE
PROJECT NO.:	3081-AB
DATE:	JUNE 7, 2020
SCALE:	AS NOTED

SHEET 108 OF 181

E080

E080-Well No.5 Electrical Plan

pdf2013.pltcfg
20.0 sf:si / in.
began
6/2/2020 1:35:42 PM
T:\Projects\Brunswick_Regional_W&S_H2GO-3081\AB-Water_Supply&Treatment_Plant\Sheets\Wells\Electrical\Electrical Sheets Well Sites.dgn

DocuSign Envelope ID: 4D5279CF-D412-45C6-8AD7-ED4B330F8B61

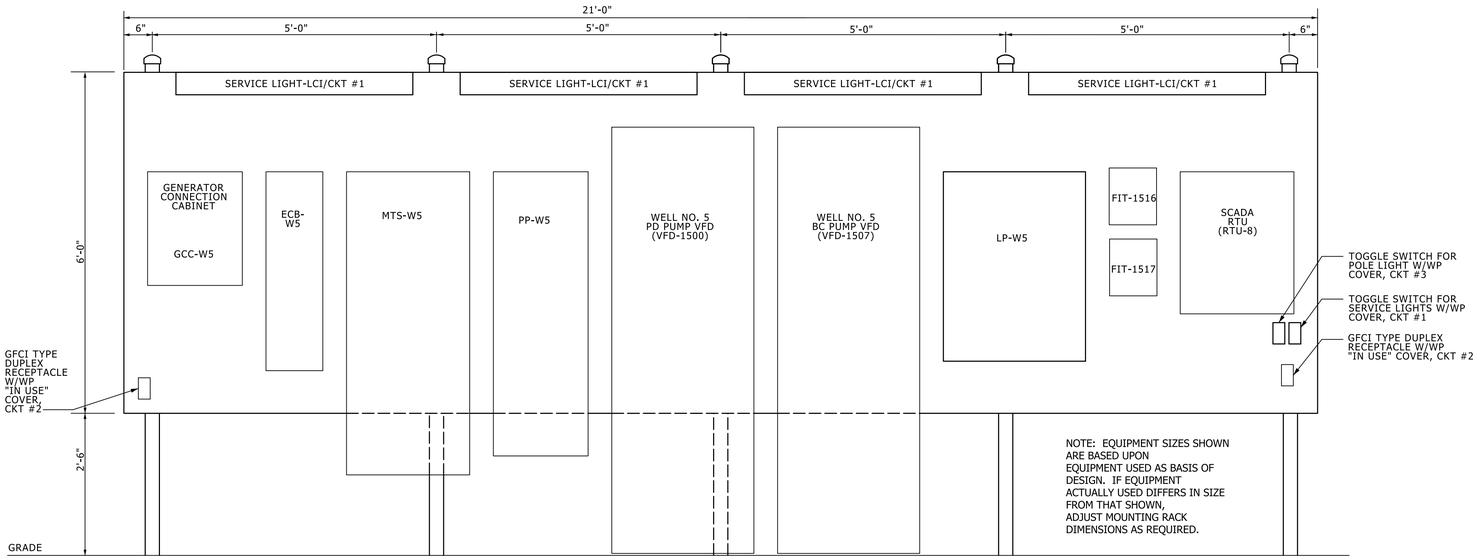

1 E081 EQUIPMENT RACK ELEVATION
NOT TO SCALE

NOTES:

1. 2#12, #12GND, 3/4" C

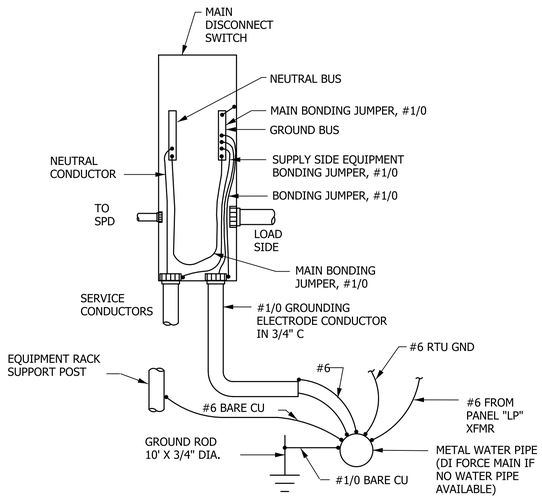

2 E081 SERVICE GROUNDING AND BONDING DETAIL
NOT TO SCALE

PANEL PP-W5 — TYPE: NEMA 4X SST
480 VOLTS, 3 PHASE, 3 WIRE — MAIN BREAKER 400A 3P — MOUNT: SURFACE

DESCRIPTION	WIRE	TRIP	POLE	No.	VOLT-AMPERES A	VOLT-AMPERES B	VOLT-AMPERES C	VOLT-AMPERES A	VOLT-AMPERES B	VOLT-AMPERES C	No.	POLE	TRIP	WIRE	DESCRIPTION
WELL NO.5 PD PUMP VFD	P-0504	150	3	1	26,700			43,300			2				
				3		26,700			43,300		4	3	250	P-0506	WELL NO.5 BC PUMP VFD
				5			26,700			43,300	6				
MOV-1506	P-0509	20	3	7	750			750			8				
				9		750			750		10	3	20	P-0510	MOV-1513
				11			750			750	12				
SPARE		20	3	13	---			1,060			14				
				15		---			1,200		16	3	40	P-0508	LP-W5
				17			---			1,500	18				
SPACE				19	---			---			20				
				21		---			---		22				SPACE
				23			---			---	24				
SPACE				25	---			---			26				
				27		---			---		28				SPACE
				29			---			---	30				
				TOTAL	27,450	27,450	27,450	45,110	45,250	45,550	TOTAL				
					PHASE TOTAL			TOTAL LOAD							
					72,560	72,700	73,000	218,260							

NOTES:
*22kAIC
*SPD - 200kA

TOTAL LOAD (AMPS)
262.5
65.6%

COMBINATION POWER UNIT LP-W5 — TYPE: NEMA 3RX SST
480-208/120 VOLTS, 3 PHASE, 4 WIRE — 40A PRIMARY MAIN BREAKER (480V) — 50A SECONDARY MAIN BREAKER (208V) — MOUNT: SURFACE

DESCRIPTION	WIRE	TRIP	POLE	No.	VOLT-AMPERES A	VOLT-AMPERES B	VOLT-AMPERES C	VOLT-AMPERES A	VOLT-AMPERES B	VOLT-AMPERES C	No.	POLE	TRIP	WIRE	DESCRIPTION
LIGHTING - EQPT RACK	SEE NOTE 1	20	1	1	300			360			2	1	20	SEE NOTE 1	RECEPT. - EQPT RACK
LIGHTING - POLE LIGHTS	P-0512	20	1	3		500			700		4	1	20	P-0516	HEAT TRACE
SPARE		20	1	5			---			1,500	6	1	20	P-0513	RTU-8
FIT-1516	P-0514	20	1	7	200			200			8	1	20	P-0515	FIT-1517
SPARE		20	1	9		---			---		10	1	20		SPARE
SPARE		20	1	11			---			---	12	1	20		SPARE
SPACE				13	---			---			14				SPACE
SPACE				15		---			---		16				SPACE
SPACE				17			---			---	18				SPACE
				TOTAL	500	500	0	560	700	1,500	TOTAL				
					PHASE TOTAL			TOTAL LOAD							
					1,060	1,200	1,500	3,760							

NOTES:
*10kAIC
*15kVA COMBINATION POWER UNIT
*SPD - 100kA
PROVIDE GFIE BREAKER FOR HEAT TRACE

TOTAL LOAD (AMPS)
10.4
20.9%

REVISIONS

THE WOOTEN COMPANY
120 North Boylan Avenue Raleigh, NC 27603-1423
919.828.0531 Fax 919.834.3389
License Number: F-0115

BRUNSWICK REGIONAL WATER AND SEWER H2GO
BRUNSWICK COUNTY — NORTH CAROLINA
CONTRACT No. 4
REVERSE OSMOSIS WATER TREATMENT PLANT

ELECTRICAL - WELL NO. 5
EQUIPMENT RACK ELEVATION & PANEL SCHEDULE

NORTH CAROLINA PROFESSIONAL ENGINEER SEAL 16765 DocuSigned by: ROBERT E. EARLY

DESIGNED BY: JJS/REE
DRAWN BY: PMD/EML
CHECKED BY: REE
PROJECT NO.: 3081-AB
DATE: JUNE 7, 2020
SCALE: AS NOTED

SHEET 109 OF 181

E081

pdf2013.pltcfg
20:0 sf:si / in.
began
6/2/2020 1:35:43 PM
T:\Projects\Brunswick_Regional_W&S_H2GO-3081\AB-Water_Supply&Treatment_Plant\Sheets\Wells\Electrical\Electrical Sheets Well Sites.dgn

DocuSign Envelope ID: 4D5279CF-D412-45C6-8AD7-ED4B330F8B61

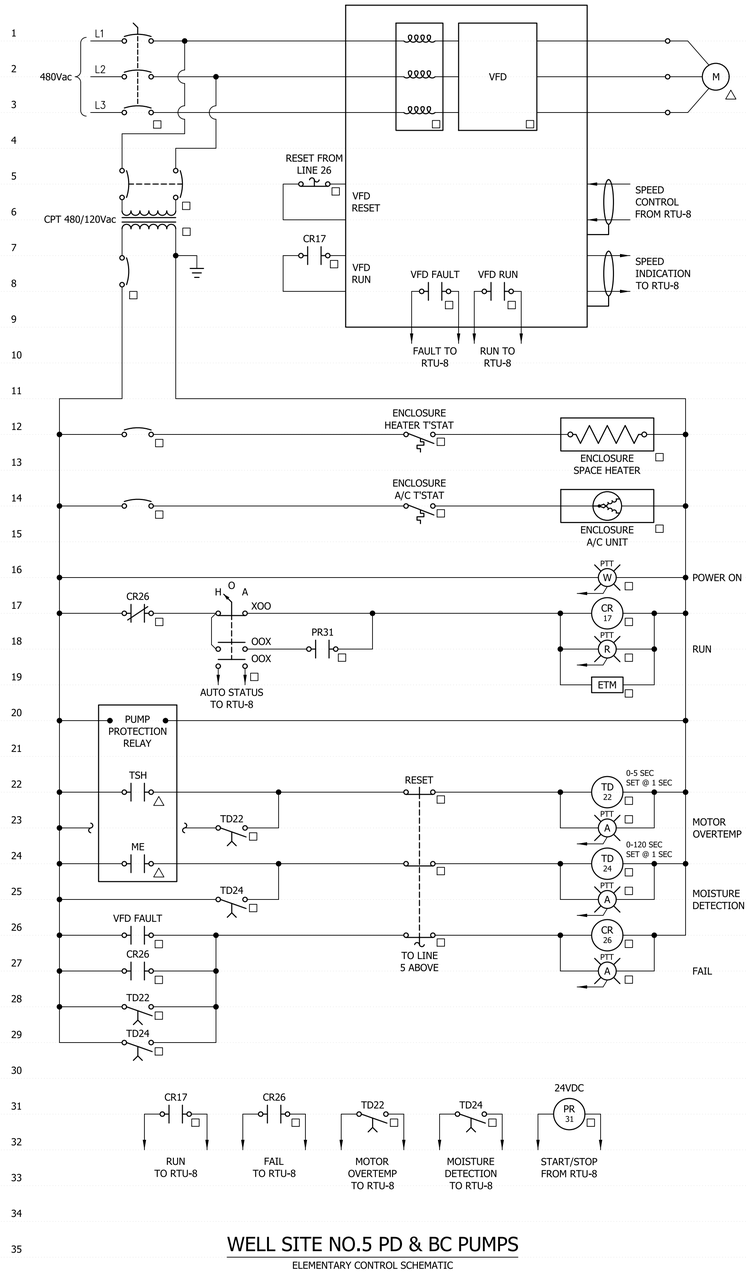

WELL SITE NO.5 PD & BC PUMPS

ELEMENTARY CONTROL SCHEMATIC

CONDUIT NO.	SIZE	FROM	TO	CONDUCTORS	REMARKS
P-0500	4"	ELECTRICAL UTILITY	ECB-W5	4#500kcmil	
P-0501	3"	ECB-W5	MTS-W5	3#500kcmil, #1/0GND	
P-0502	3"	GCC-W5	MTS-W5	3#500kcmil, #1/0GND	
P-0503	3"	MTS-W5	PP-W5	3#500kcmil, #1/0GND	
P-0504	1-1/2"	PP-W5	WELL NO.5 PD PUMP VFD	3#1/0, #6GND	
P-0505	2"	WELL NO.5 PD PUMP VFD	WELL NO.5 PD PUMP	CABLE BY MANUF.	
P-0506	2"	PP-W5	WELL NO.5 BC PUMP VFD	3#4/0, #4GND	
P-0507	2-1/2"	WELL NO.5 BC PUMP VFD	WELL NO.5 BC PUMP	CABLE BY MANUF.	
P-0508	3/4"	PP-W5	LP-W5	3#8, #10GND	
P-0509	1"	PP-W5	MOV-1506	3#12, #12GND	
P-0510	1"	PP-W5	MOV-1513	3#12, #12GND	
P-0511				NOT USED	
P-0512	1"	LP-W5	SITE LIGHTING	2#12, #12GND	
P-0513	3/4"	LP-W5	RTU-8	2#12, #12GND	
P-0514	3/4"	LP-W5	FIT-1516	2#12, #12GND	
P-0515	3/4"	LP-W5	FIT-1517	2#12, #12GND	

CONDUIT NO.	SIZE	FROM	TO	CONDUCTORS	REMARKS
C-0500	2"	RTU-8	ANTENNA	BY SCADA CONTRACT	
C-0501	3/4"	RTU-8	WELL NO.5 PD PUMP VFD	14#14, #14GND	
C-0502	3/4"	RTU-8	WELL NO.5 BC PUMP VFD	14#14, #14GND	
C-0503	1"	RTU-8	MOV-1506	10#14, #14GND	
C-0504	1"	RTU-8	MOV-1513	10#14, #14GND	
C-0505				NOT USED	
C-0506	1-1/2"	WELL NO.5 PD PUMP VFD	WELL NO.5 PD PUMP	CABLE BY MANUF.	
C-0507	1-1/2"	WELL NO.5 BC PUMP VFD	WELL NO.5 BC PUMP	CABLE BY MANUF.	
C-0508				NOT USED	
C-0509				NOT USED	
C-0510				NOT USED	

CONDUIT NO.	SIZE	FROM	TO	CONDUCTORS	REMARKS
I-0500	1"	RTU-8	WELL NO.5 PD PUMP VFD	2-(2/C#16TSH), #14GND	
I-0501	1"	RTU-8	WELL NO.5 BC PUMP VFD	2-(2/C#16TSH), #14GND	
I-0502	3/4"	RTU-8	FIT-1516	2/C#16TSH, #14GND	
I-0503	1"	FIT-1516	FE-1516	CABLE BY MANUF.	
I-0504	1"	RTU-8	FIT-1517	2/C#16TSH, #14GND	
I-0505	1"	FIT-1517	FE-1517	CABLE BY MANUF.	
I-0506	1"	RTU-8	LT-1518	CABLE BY MANUF.	
I-0507	1"	RTU-8	LT-1519	CABLE BY MANUF.	
I-0508	1"	RTU-8	PIT-1514	2/C#16TSH, #14GND	
I-0509				NOT USED	
I-0510				NOT USED	

REVISIONS

THE WOOTEN COMPANY
120 North Boylan Avenue Raleigh, NC 27603-1423
919.828.0531 Fax 919.834.5369
License Number: F-0113

BRUNSWICK REGIONAL WATER AND SEWER H2GO
BRUNSWICK COUNTY NORTH CAROLINA

CONTRACT No. 4

REVERSE OSMOSIS WATER TREATMENT PLANT

ELECTRICAL - WELL NO. 5
ELEMENTARY CONTROL SCHEMATIC,
& CONDUIT & WIRE SCHEDULES

NORTH CAROLINA PROFESSIONAL ENGINEER SEAL 16765 DocuSigned by ENGINEER ROBERT E. E.

DESIGNED BY: JJS/REE
DRAWN BY: PMD/EML
CHECKED BY: REE
PROJECT NO.: 3081-AB
DATE: JUNE 7, 2020
SCALE: AS NOTED

SHEET 110 OF 181

E082

pdf2013.pltcfg
20.0 sf.si / in.
began
6/2/2020 1:35:51 PM
T:\Projects\Brunswick_Regional_W&S_H2GO-3081\AB-Water_Supply&Treatment_Plant\Sheets\Wells\Electrical\Electrical Sheets Well Sites.dgn

DocuSign Envelope ID: 90E8EB5B-D04D-407C-8823-7B551B888A3A

E100-OVERALL POWER PLAN

SEE ENLARGED VIEW ON SHEET E102

GROUND ROD W/ TEST WELL, SEE DETAIL 3/801

#4/0 BCC, TYP.

GROUND ROD, TYP.

OV-02

HYPOCHLORITE ROOM 123

ELECTRICAL EQUIPMENT ROOM 122

STORAGE 120

JANITOR 121

CAUSTIC ROOM 119

CORROSION INHIBITOR ROOM 118

SHOP / STORAGE 117

CARTRIDGE FILTERS

R.O. SKID

R.O. TREATMENT ROOM

FLUSH TANK

CLEAN TANK

WASTE TANK

ANTI-SCALE FEED

DHV-OV-01
YRY-OV-01

LABORATORY 115

CONTROL ROOM 114

DHV-OV-02

DHV-OV-03

BREAK ROOM 104

CORRIDOR A01

MECH/ELEC 106

CL 113

SERVER 112

SHOWER / LOCKER 108

OFFICE 110

TRAINING / MEETING ROOM 101

LOBBY 100

CORRIDOR A02

WC 107

WC 109

CL 105

CL 111

CHEMICAL FILL STATION
SEE CIVIL M153

BOND TO LIGHTNING PROTECTION DOWN CONDUCTOR, TYP.

SEE ENLARGED VIEW ON SHEET E103

SEE ENLARGED VIEW ON SHEET E104

1 E100 OVERALL POWER PLAN
SCALE: 1/8" = 1'-0"

8' 4' 0 8' 16' 24'
SCALE: 1/8" = 1'-0"

REVISIONS

THE WOOTEN COMPANY
120 North Boylan Avenue Raleigh, NC 27603-1423
919.828.0531 Fax 919.831.1589
License Numbers: F-0115

BRUNSWICK REGIONAL WATER AND SEWER H2GO
BRUNSWICK COUNTY NORTH CAROLINA
CONTRACT No. 4
REVERSE OSMOSIS WATER TREATMENT PLANT
ELECTRICAL
OVERALL POWER PLAN

NORTH CAROLINA PROFESSIONAL ENGINEER SEAL 16765 DocuSigned by: ROBERT E. EGAN

DESIGNED BY: JJS/REE
DRAWN BY: PMD/EML
CHECKED BY: REE
PROJECT NO.: 3081-AB
DATE: JUNE 7, 2020
SCALE: AS NOTED

SHEET 111 OF 181

E100

pdf2013.pltcfg
8.0000 " / in.
began
6/2/2020 1:28:11 PM
T:\Projects\Brunswick_Regional_W&S_H2GO-3081\AB-Water_Supply&Treatment_Plant\Sheets\WTP\Electrical\RO Plant Elect Sheets.dgn

DocuSign Envelope ID: 90E8EB5B-D04D-407C-8823-7B551B888A3A

E101-OVERALL_SYSTEMS_PLAN

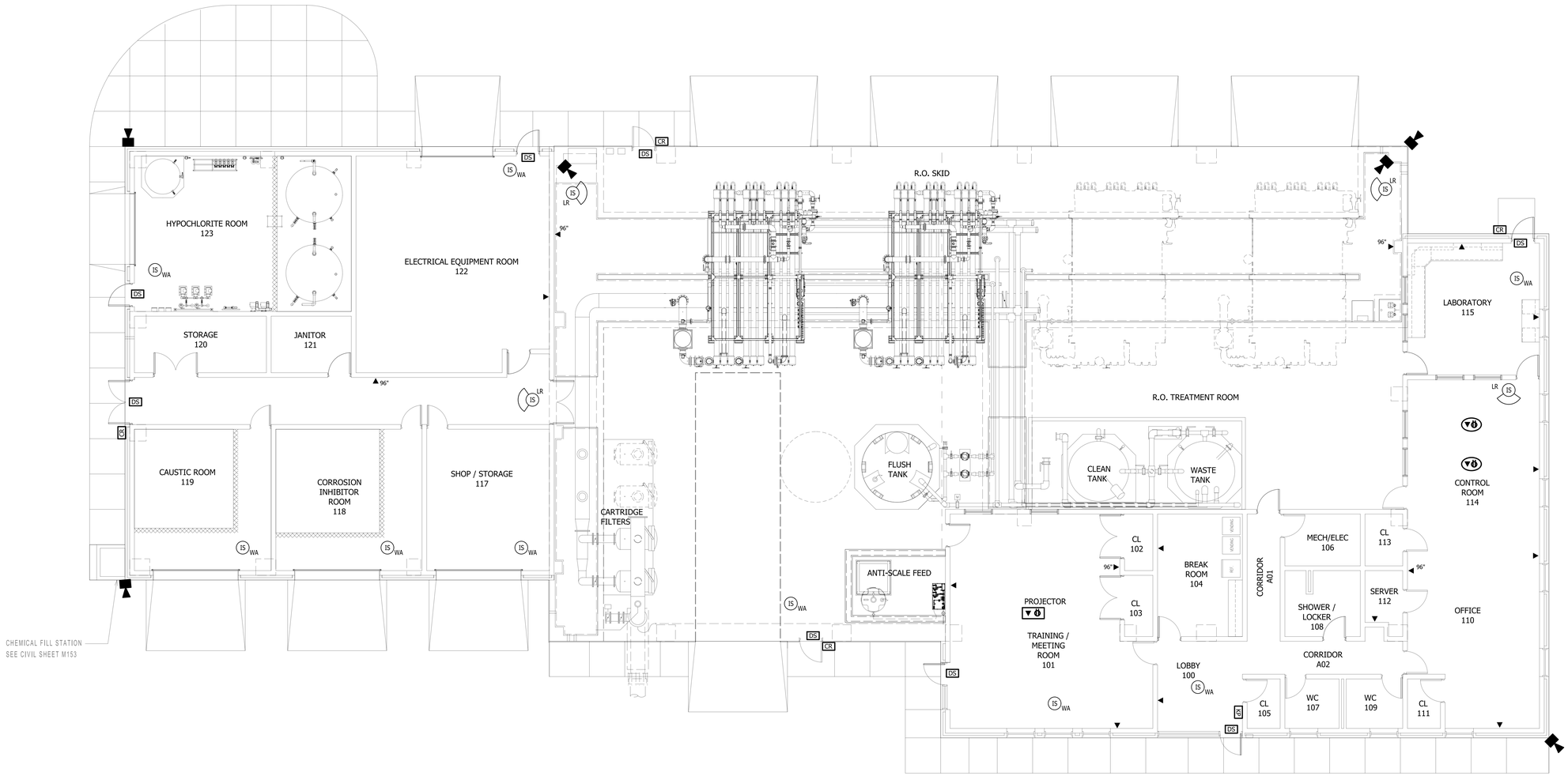

1 E101 OVERALL SYSTEMS PLAN
SCALE: 1/8" = 1'-0"

8' 4' 0 8' 16' 24'
SCALE: 1/8" = 1'-0"

REVISIONS

THE WOOTEN COMPANY
120 North Boylan Avenue Raleigh, NC 27603-1423
919.828.0531 fax 919.834.3589
License Number: F-0115

BRUNSWICK REGIONAL WATER AND SEWER H2GO
BRUNSWICK COUNTY NORTH CAROLINA
CONTRACT No. 4
REVERSE OSMOSIS WATER TREATMENT PLANT
ELECTRICAL
OVERALL SYSTEMS PLAN

NORTH CAROLINA PROFESSIONAL 16765 ENGINEER ROBERT E. EGAN

DESIGNED BY:	JJS/REE
DRAWN BY:	PMD/EML
CHECKED BY:	REE
PROJECT NO.:	3081-AB
DATE:	JUNE 7, 2020
SCALE:	AS NOTED

SHEET 112 OF 181

E101

pdf2013.pltcfg
8.0000 ' / in.
began
6/2/2020 1:28:14 PM
T:\Projects\Brunswick_Regional_W&S_H2GO-3081\AB-Water_Supply&Treatment_Plant\Sheets\WTP\Electrical\RO Plant Elect Sheets.dgn

DocuSign Envelope ID: 90E8EB5B-D04D-407C-8823-7B551B888A3A

E102-Chem Area Plan

NOTES:

1. ALL LIGHTS AND RECEPTACLES ARE FED FROM PANELBOARD LP-RO-2, LOCATED IN THE ELECTRICAL ROOM.
2. MOUNT FIXTURE TYPES LP1 AND LP1A 12'-0" AFF.
3. MOUNT FIXTURE TYPE XW1 12" ABOVE RESPECTIVE DOOR FRAME.

REVISIONS

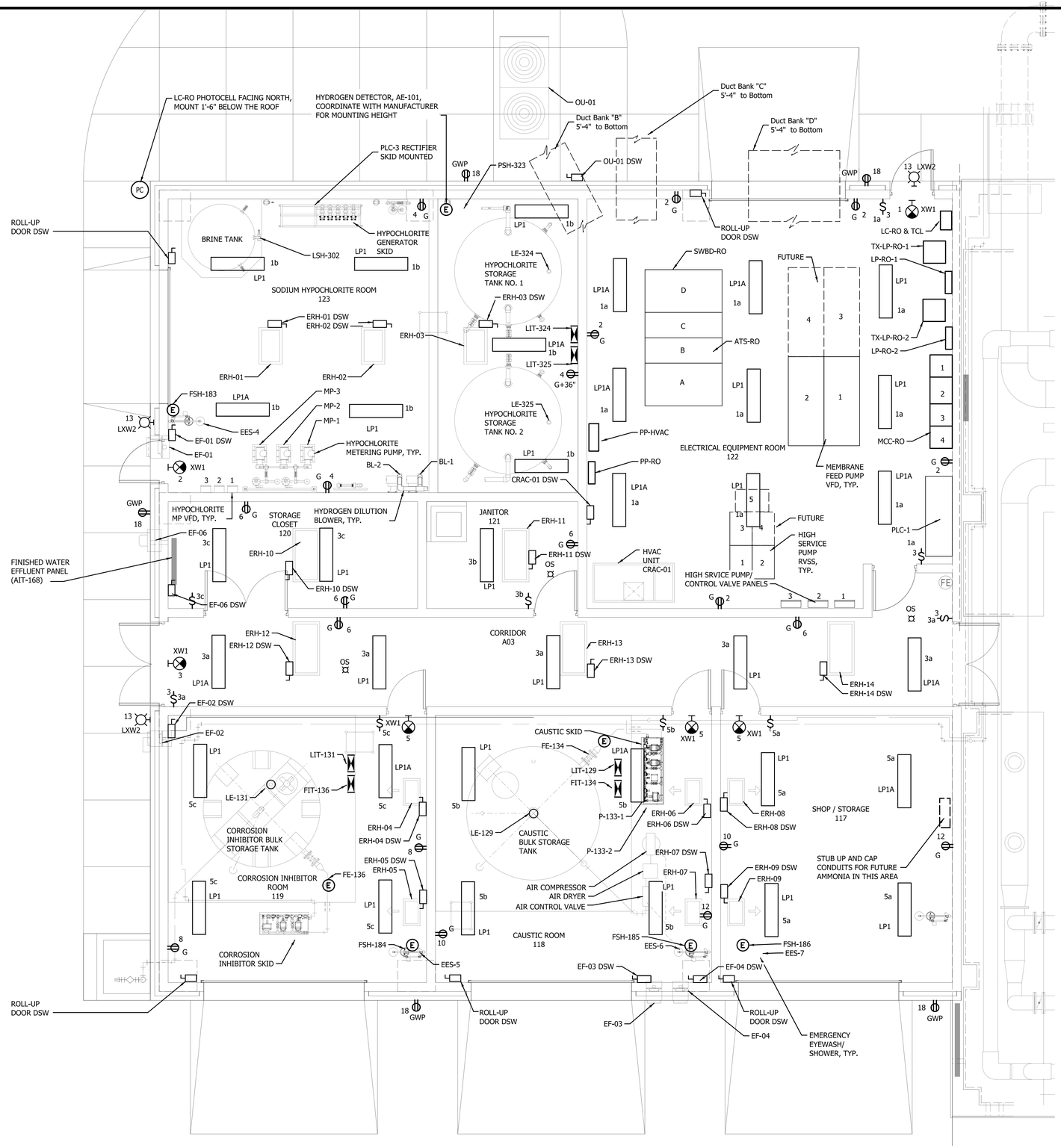

1 E102 ELECTRICAL-ENLARGED POWER AND LIGHTING PLAN

SCALE: 1/4" = 1'-0"

4' 2' 0 4' 8' 12'

SCALE: 1/4" = 1'-0"

THE WOOTEN COMPANY
120 North Boylan Avenue Raleigh, NC 27603-1423
919.828.0531 Fax 919.834.5389
License Number: F-1015

BRUNSWICK REGIONAL WATER AND SEWER H2GO
BRUNSWICK COUNTY NORTH CAROLINA
CONTRACT No. 4
REVERSE OSMOSIS WATER TREATMENT PLANT

ELECTRICAL-RO TREATMENT BUILDING
ENLARGED POWER & LIGHTING PLAN

NORTH CAROLINA PROFESSIONAL ENGINEER SEAL 16765 DocuSigned by: ROBERT E. EVANS

DESIGNED BY: JJS/REE
DRAWN BY: PMD/EML
CHECKED BY: REE
PROJECT NO.: 3081-AB
DATE: JUNE 7, 2020
SCALE: AS NOTED

SHEET 113 OF 181

E102

pdf2013.pltcfg
4.0000 " / in.
began
6/2/2020 1:28:16 PM
T:\Projects\Brunswick_Regional_W&S_H2GO-3081\AB-Water_Supply&Treatment_Plant\Sheets\WTP\Electrical\RO Plant Elect Sheets.dgn

DocuSign Envelope ID: 90E8EB5B-D04D-407C-8823-7B551B888A3A

E103-RO Area Plan

LXW2 15 · XW1 7 · 46 G · CO2 SYSTEM ALARM CP · AIT-160 · CO2 SYSTEM PRESSURE SOLUTION FEED CP · ROLL-UP DOOR DSW · 16 G · ROLL-UP DOOR DSW · GWP 18 · 16 G · ROLL-UP DOOR DSW · 16 G · ROLL-UP DOOR DSW

CALCITE EFFLUENT PANEL (AIT-162) · CALCITE INFLUENT PANEL (AIT-179) · COMBINED CONCENTRATE PANEL (AIT-118) · 16 G · FIT-120 · FE-120 IN VERTICAL

FE-217-1 · FE-217-2 · MOV-218-1 · MOV-218-2 · MOV-218-1 DSW · MOV-218-2 DSW · FUTURE MOV-218-3 DSW · FUTURE MOV-218-4 DSW

PIT-116 · FIT-117 · COMBINED PERMEATE PANEL (AIT-114) · FE-117 · LP2 11,13 · LP2A 7,9 · LP2 11,13 · LP2 7,9 · LP2A 11,13 · LP2 7,9

MOV-201-1 DSW · MOV-202-1 DSW · MOV-201-1 · MOV-202-1 · PLC-2-1 · MOV-201-2 DSW · MOV-202-2 DSW · MOV-201-2 · MOV-202-2 · PLC-2-2 · FUTURE MOV-201-3 DSW & MOV-202-3 DSW · FUTURE PLC-2-3 · FUTURE MOV-201-4 DSW & MOV-202-4 DSW · FUTURE PLC-2-4 · SUMP PUMP CP

PIT-205-1 PIT-209-1 PIT-210-1 PIT-212-1 PIT-214-1 FIT-208-1 FIT-211-1 FIT-217-1 AIT-215-1 AIT-216-1

PIT-205-2 PIT-209-2 PIT-210-2 PIT-212-2 PIT-214-2 FIT-208-2 FIT-211-2 FIT-217-2 AIT-215-2 AIT-216-2

PSL-203-1 · ROFP-1-LCS, CPB-ROFP-1 BELOW · RO FEED PUMP, TYP. · ROFP-1 · PSH-206-1 · MOV-207-1 · MOV-207-1 DSW

PSL-203-2 · ROFP-2-LCS, CPB-ROFP-2 BELOW · ROFP-2 · PSH-206-2 · MOV-207-2 · MOV-207-2 DSW · R.O. SKID, TYP.

FUTURE MOV-207-3 DSW · FUTURE ROFP-3 · FUTURE CPB-ROFP-3 · FUTURE RO SKID · FUTURE MOV-207-4 DSW · FUTURE ROFP-4 · FUTURE CPB-ROFP-4 · FUTURE RO SKID

14 G · SUMP PUMP, TYP. · 14 G · FSH-181 · EES-2 · EMERGENCY EYEWASH/SHOWER, TYP.

MIX-1 LCS, CPB-MIX-1 BELOW · CP-1 LCS, CPB-CP-1 BELOW · CP-1 DSW · R.O. TREATMENT ROOM · TANK HEATER CONTROL PANEL · 40 G · LP2 11,13 · DPIT-127 · LP2 7,9 · FIT-125 · CLEANING PUMP (CP-1) · FE-125 IN VERTICAL

LP2 7,9 · LP2 11,13 · EQUIPMENT RACK · FLP-2 LCS, CPB-FLP-2 BELOW · FLP-2 DSW · FLP-1 LCS, CPB-FLP-1 BELOW · FLP-1 DSW · FLUSH PUMP, TYP

PSH-122 · LP2 11,13 · FLUSH TANK · FLP-1 · FLP-2 · WASTE TANK · CLEAN TANK · LIT-111 · LE-111 · MOV-112-DSW · MOV-112 · MIX-1 DSW · SPENT CLEANING SOLUTION TANK MIXER (MIX-1) · CLEANING & SPENT SOLUTION PANEL (AIT-124) · 14 G

LP2 11,13 · CARTRIDGE FILTERS · LP2A 7,9 · RAW WATER PANEL (FIT-101,PIT-102,AIT-104,AIT-105,AIT-106,TIT-107,DPIT-110) · MOV-109 · MOV-108 (IN VERTICAL) · SCALE INHIBITOR TOTE · 11,13 LP2 · FSH-182 · EES-3 · SCALE INHIBITOR SKID · FIT/FE-135 · SCALE INHIBITOR DAY TANK · LE-103 · LIT-103

G 14 · ROLL-UP DOOR DSW · 9 XW1 · G 14 · 15 LXW2

MOV-108 DSW · MOV-109 DSW · RWSP-1 DSW · RWSP-1 LCS,CPB-RWSP-1 BELOW · RAW WATER SAMPLE PUMP (RWSP-1)

NOTES:

1. ALL LIGHTS AND RECEPTACLES ARE FED FROM PANELBOARD LP-RO-2, LOCATED IN THE ELECTRICAL ROOM.
2. MOUNT FIXTURE TYPES LP2 ANED LP2A 20'-0" AFF.
3. MOUNT FIXTURE TYPE XW1 12" ABOVE RESPECTIVE DOOR FRAME.

1 / E103 ELECTRICAL-ENLARGED POWER AND LIGHTING PLAN
SCALE: 1/4" = 1'-0"

4' 2' 0 4' 8' 12'
SCALE: 1/4" = 1'-0"

REVISIONS

THE WOOTEN COMPANY
120 North Boylan Avenue Raleigh, NC 27603-1423
919.828.0531 Fax 919.831.1589
License Number: F-0115

BRUNSWICK REGIONAL WATER AND SEWER H2GO
BRUNSWICK COUNTY NORTH CAROLINA
CONTRACT No. 4
REVERSE OSMOSIS WATER TREATMENT PLANT
ELECTRICAL-RO TREATMENT BUILDING
ENLARGED POWER AND LIGHTING PLAN

NORTH CAROLINA PROFESSIONAL ENGINEER SEAL 16765 DocuSigned by: ROBERT E. EGAN

DESIGNED BY: JJS/REE
DRAWN BY: PMD/EML
CHECKED BY: REE
PROJECT NO.: 3081-AB
DATE: JUNE 7, 2020
SCALE: AS NOTED

SHEET 114 OF 181

E103

pdf2013.pltcfg
4.0000 " / in.
began
6/2/2020 1:28:17 PM
T:\Projects\Brunswick_Regional_W&S_H2GO-3081\AB-Water_Supply&Treatment_Plant\Sheets\WTP\Electrical\RO Plant Elect Sheets.dgn

DocuSign Envelope ID: 07EE8357-F180-46DA-A581-ADBF726A5098

E104-Lab Area Plan

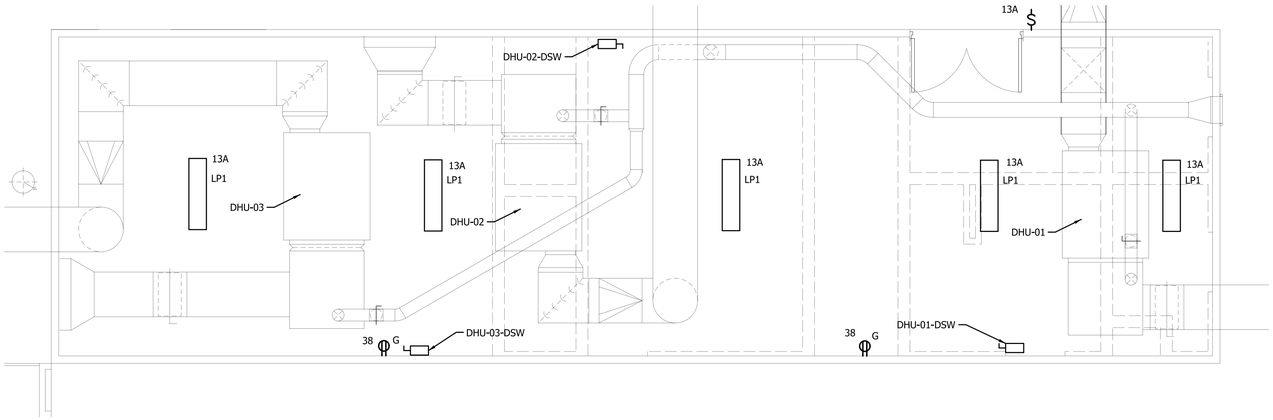

2 E104 LEVEL TWO
SCALE: 1/4" = 1'-0"

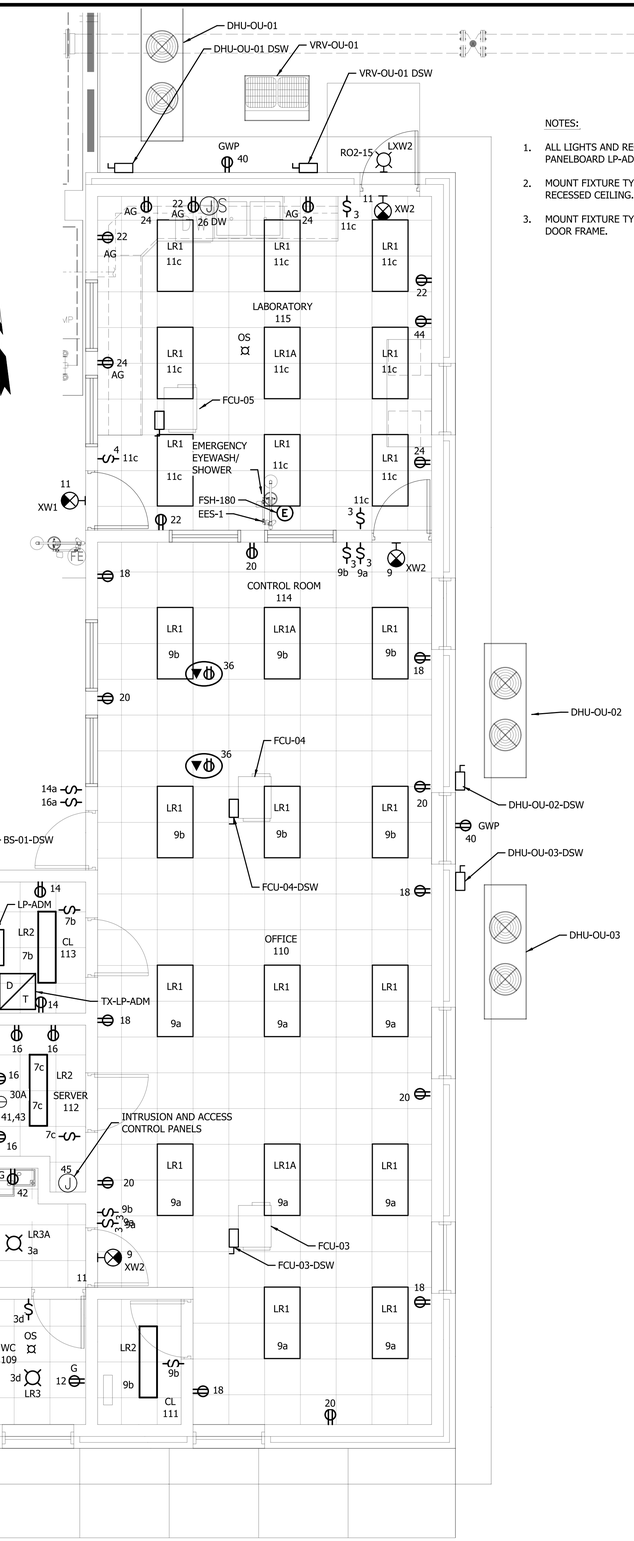

1 E104 ENLARGED POWER AND LIGHTING PLAN
SCALE: 1/4" = 1'-0"

4' 2' 0 4' 8' 12'
SCALE: 1/4" = 1'-0"

NOTES:

1. ALL LIGHTS AND RECEPTACLES ARE FED FROM PANELBOARD LP-ADM.
2. MOUNT FIXTURE TYPES LR1 AND LR1A IN THE RECESSED CEILING.
3. MOUNT FIXTURE TYPE XW2 12" ABOVE RESPECTIVE DOOR FRAME.

REVISIONS

THE WOOTEN COMPANY
120 North Boylan Avenue Raleigh, NC 27603-1423
919.828.0531 Fax 919.831.1389
License Number: F-0115

BRUNSWICK REGIONAL WATER AND SEWER H2GO
BRUNSWICK COUNTY NORTH CAROLINA
CONTRACT No. 4
REVERSE OSMOSIS WATER TREATMENT PLANT

ELECTRICAL-RO TREATMENT BUILDING
ENLARGED POWER AND LIGHTING PLAN

NORTH CAROLINA PROFESSIONAL ENGINEER 16765 DocuSigned by: ROBERT E. ELAM

DESIGNED BY:	JJS/REE
DRAWN BY:	PMD/EML
CHECKED BY:	REE
PROJECT NO.:	3081-AB
DATE:	JUNE 7, 2020
SCALE:	AS NOTED

SHEET 115 OF 181

E104

pdf2013.pltcfg
4.0000 " / in.
began
6/3/2020 10:52:03 AM
T:\Projects\Brunswick_Regional_W&S_H2GO-3081\AB-Water_Supply&Treatment_Plant\Sheets\WTP\Electrical\RO Plant Elect Sheets.dgn

DocuSign Envelope ID: 90E8EB5B-D04D-407C-8823-7B551B888A3A

E105-SWBD-ROSingle line diagram

FROM BRUNSWICK ELECTRIC

UTILITY XFMR
2500kVA
12.47kV-480/277V
3P/4W
LIQUID FILLED

SEE NOTE 1

3200:5
(3)

UTILITY METERING

P-1012 P-1018
P-1013 P-1019
P-1014 P-1020
P-1015 P-1021
P-1016 P-1022
P-1017 P-1023

C-1004

GEN-RO

3200 AF
3200AT

2000kW
480V,3Ø,4W

FROM SWBD-RO

P-1077

P-1000 P-1006
P-1001 P-1007
P-1002 P-1008
P-1003 P-1009
P-1004 P-1010
P-1005 P-1011

NC 3200AF 3200AP 3200AT LSIG CTR

NO 3200AF 3200AP 3200AT LSIG CTR

ATS-RO
480V, 3200A
3Ø, 4W, 3P
65kA
CLOSED TRANSITION
S.E. RATED

B4

SPD

3200A, 3Ø, 4W, 480/277Vac, 65kAIC, SILVER-PLATED COPPER BUS

POWER MONITOR

B2

3200:5A
(3)

SWBD-RO

1600A, 3Ø, 4W, 480/277Vac, 65kAIC, SILVER-PLATED COPPER BUS

2400A, 3Ø, 4W, 480/277Vac, 65kAIC, SILVER-PLATED COPPER BUS

A7 A6 A5 A4 A3 A2 A1 B1 C1 D1 D2 D3 D4 D5

600 AF 600 AT | 600 AF 600 AT | 400 AF 400 AT | 400 AF 400 AT | 100 AF 50 AT | 1600 AF 1600 AT | 2400 AF 2400 AT | 600 AF 600 AT | 600 AF 600 AT | 400 AF 400 AT | 400 AF 400 AT | 400 AF 400 AT

P-1044 P-1045 | P-1048 P-1049 | P-1064 P-1065 | P-1068 P-1069 | P-1036 P-1037 | P-1040 P-1041 | P-1052 P-1053 | P-1056 P-1057 | P-1060 P-1061

600A MCP | 600A MCP | 400 A MCP | 400 A MCP | 600A MCP | 600A MCP | 400 A MCP | 400 A MCP | 400 A MCP

IC

18 PULSE VFD | 18 PULSE VFD | RVSS | RVSS | 18 PULSE VFD | 18 PULSE VFD | RVSS | RVSS | RVSS

FROM PANEL LP-R0-1 | FROM PANEL LP-R0-1 | FROM PANEL LP-R0-1 | FROM PANEL LP-R0-1 | FROM PANEL LP-R0-1

C-1074 P-1046 P-1047 | C-1075 P-1050 P-1051 | P-1066 P-1067 C-1088 | P-1070 P-1071 C-1089 | C-1064 P-1038 P-1039 C-1065 C-1066 C-1067 C-1068 | C-1069 P-1042 P-1043 C-1070 C-1071 C-1072 C-1073 | C-1076 P-1054 P-1055 C-1077 C-1078 C-1079 | C-1080 P-1058 P-1059 C-1081 C-1082 C-1083 | C-1084 P-1062 P-1063 C-1085 C-1086 C-1087

CPB-ROFP-3 | CPB-ROFP-4 | P-1062 PCVP-HSP-4 LCS-164-4 | P-1063 PCVP-HSP-5 LCS-164-5 | CPB-ROFP-1 | CPB-ROFP-2 | P-1059 PCVP-HSP-1 LCS-164-1 | P-1060 PCVP-HSP-2 LCS-164-2 | P-1061 PCVP-HSP-3 LCS-164-3

HS-204-3 PSL-203-3 PSH-206-3 | HS-204-4 PSL-203-4 PSH-206-4 | CV-164-4 | CV-164-5 | HS-204-1 PSL-203-1 PSH-206-1 | HS-204-2 PSL-203-2 PSH-206-2 | CV-164-1 | CV-164-2 | CV-164-3

400 TSH MSH | 400 TSH MSH | 400A 3P 250 TSH MSH | 400A 3P 250 TSH MSH | 30kW | 400 TSH MSH | 400 TSH MSH | 400A 3P 250 TSH MSH | 400A 3P 250 TSH MSH | 400A 3P 250 TSH MSH

P-1087

PREPARED SPACE | PREPARED SPACE | FUTURE MEMBRANE FEED PUMP NO.3 (ROFP-3) | FUTURE MEMBRANE FEED PUMP NO.4 (ROFP-4) | FUTURE HIGH SERVICE PUMP NO.4 (HSP-4) | FUTURE HIGH SERVICE PUMP NO.5 (HSP-5) | FUTURE CO_2 SYSTEM STORAGE TANK NO.2 | MEMBRANE FEED PUMP NO.1 (ROFP-1) | MEMBRANE FEED PUMP NO.2 (ROFP-2) | HIGH SERVICE PUMP NO.1 (HSP-1) | HIGH SERVICE PUMP NO.2 (HSP-2) | HIGH SERVICE PUMP NO.3 (HSP-3)

D14 D13 D16 D15 D14 D13 D12 D11 D10 D9 D8 D7 D6

250 AF 250AT | 400 AF 350AT | 100 AF 50AT | 100 AF 50AT | 150 AF 150AT | 100 AF 70AT | 100 AF 70AT | 100 AF 70AT | 100 AF 40AT | 250 AF 250AT | 600 AF 600AT

A A D D

P-1255 P-1256 P-1257 P-1258

EMH-1

P-1259 P-1260 P-1261 P-1262

EMH-3 (THRU EMH-2)

P-1089 | P-1088 | P-1086 | P-1085 | P-1084 | P-1082 | P-1080 | P-1078 | P-1077 | P-1075 P-1076 | P-1072 P-1073 P-1074

60A 3P

30kW | 30kW | 82kW

P-1083 | P-1081 | P-1079

TX-LP-ADM 45kVA 480-208/120V | TX-LP-RO-2 45kVA 480-208/120V | TX-LP-RO-1 45kVA 480-208/120V

#4G

3P/4W DRY TRANS

PANEL LP-ADM | PANEL LP-RO-2 | PANEL LP-RO-1 | PANEL PP-CAL

SPARE POWER RACEWAY | PREPARED SPACE | PREPARED SPACE | TO PANEL PP-RO | TO PANEL PP-HVAC | CO_2 SYSTEM STORAGE TANK NO.1 | SODIUM HYPOCHLORITE REACTOR | CLEAN-IN-PLACE TANK HEATER CONTROL PANEL | LP-ADM | LP-RO-2 | LP-RO-1 | TO GEN-RO COMBINATION POWER UNIT | CALCITE POWER PANEL, PP-CAL | TO MCC-RO

SWBD-RO
SINGLE LINE DIAGRAM

REVISIONS

THE WOOTEN COMPANY
120 North Boylan Avenue Raleigh, NC 27603-1423
919.828.0531 Fax 919.831.1589
License Number: F-0113

BRUNSWICK REGIONAL WATER AND SEWER H2GO
BRUNSWICK COUNTY NORTH CAROLINA

CONTRACT No. 4
REVERSE OSMOSIS WATER TREATMENT PLANT

ELECTRICAL-RO TREATMENT BUILDING
SWBD-RO SINGLE-LINE DIAGRAM & ELEVATION

NORTH CAROLINA PROFESSIONAL ENGINEER SEAL 16765 ROBERT E. EDWARDS DocuSigned by: 6/2/2020 | 8:28:20 PM EDT

DESIGNED BY: JJS/REE
DRAWN BY: PMD/EML
CHECKED BY: REE
PROJECT NO.: 3081-AB
DATE: JUNE 7, 2020
SCALE: AS NOTED

SHEET 116 OF 181

E105

pdf2013.pltcfg
5.0000 ' / in.
began
6/2/2020 1:28:20 PM
T:\Projects\Brunswick_Regional_W&S_H2GO-3081\AB-Water_Supply&Treatment_Plant\Sheets\WTP\Electrical\RO Plant Elect Sheets.dgn

DocuSign Envelope ID: 90E8EB5B-D04D-407C-8823-7B551B888A3A

E106-Singleline_Power_diagrams

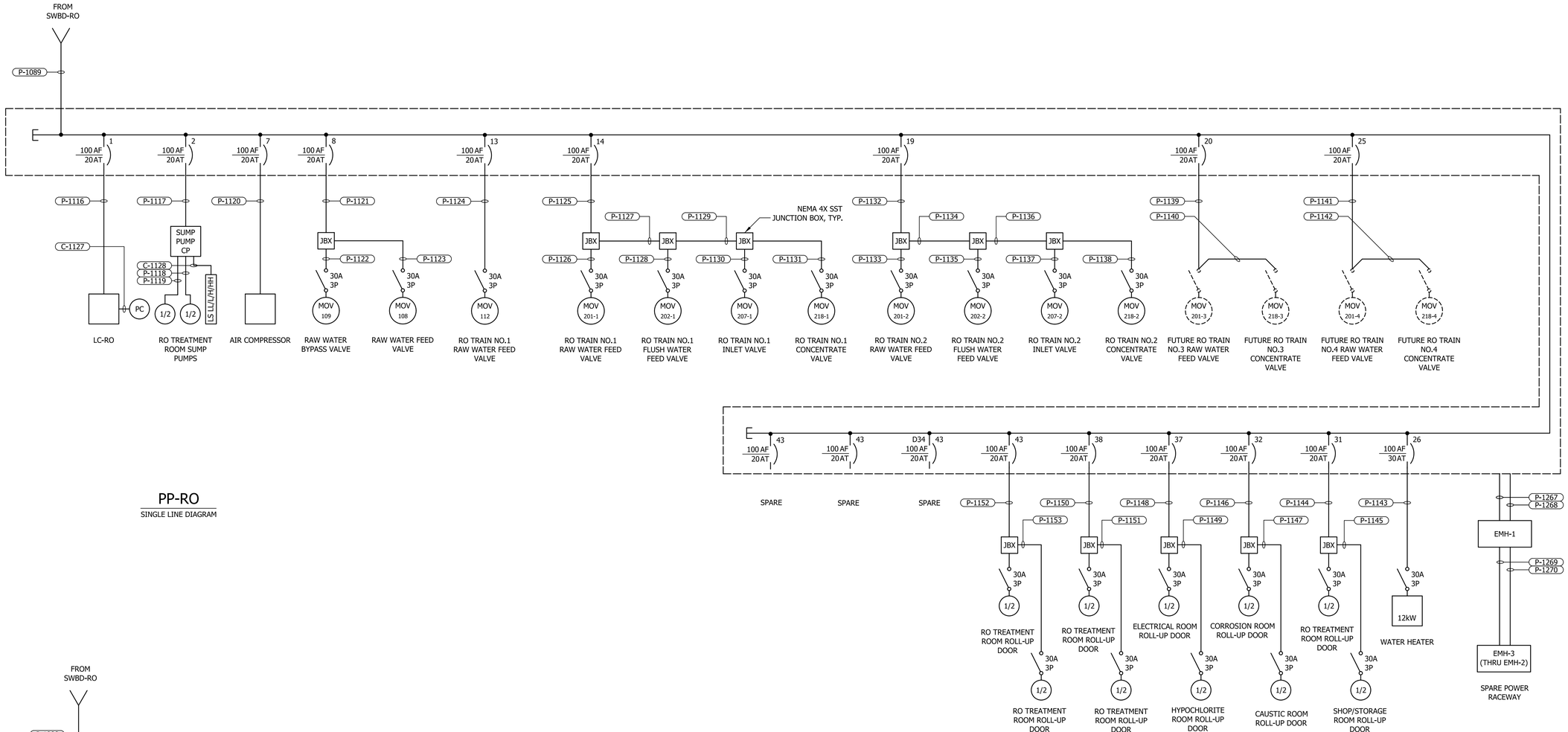

PP-RO
SINGLE LINE DIAGRAM

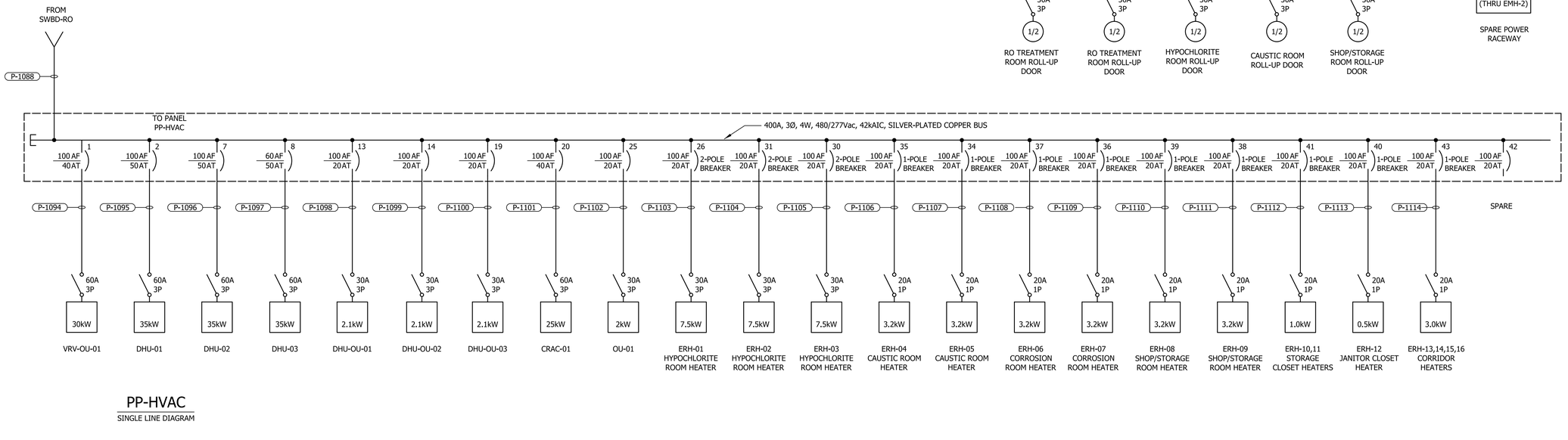

PP-HVAC
SINGLE LINE DIAGRAM

REVISIONS

THE WOOTEN COMPANY
120 North Boylan Avenue Raleigh, NC 27603-1423
919.828.0531 Fax 919.831.1589
License Number: F-0115

BRUNSWICK REGIONAL WATER AND SEWER H2GO
BRUNSWICK COUNTY NORTH CAROLINA
CONTRACT No. 4
REVERSE OSMOSIS WATER TREATMENT PLANT

ELECTRICAL-RO TREATMENT BUILDING
SWBD-RO SINGLE-LINE DIAGRAM & ELEVATION

NORTH CAROLINA PROFESSIONAL ENGINEER 16765 DocuSigned by: ENGINEER ROBERT E. EARP

DESIGNED BY:	JJS/REE
DRAWN BY:	PMD/EML
CHECKED BY:	REE
PROJECT NO.:	3081-AB
DATE:	JUNE 7, 2020
SCALE:	AS NOTED

SHEET 117 OF 181

E106

pdf2013.pltcfg
5.0000 " / in.
began
6/2/2020 1:28:21 PM
T:\Projects\Brunswick_Regional_W&S_H2GO-3081\AB-Water_Supply&Treatment_Plant\Sheets\WTP\Electrical\RO Plant Elect Sheets.dgn

DocuSign Envelope ID: 90E8EB5B-D04D-407C-8823-7B551B888A3A

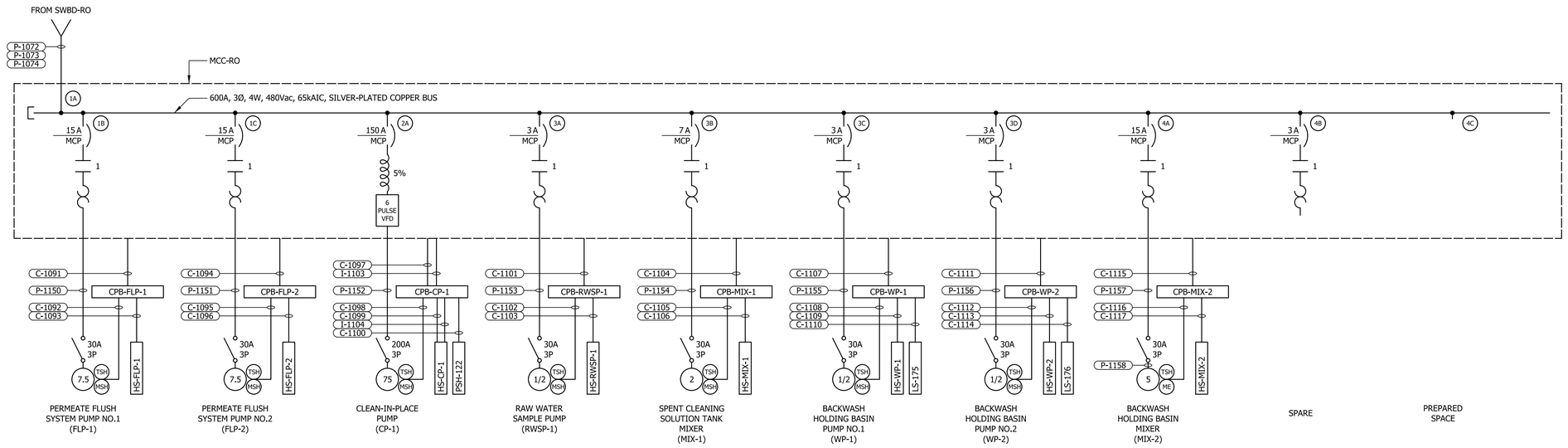

MCC-RO
SINGLE LINE DIAGRAM

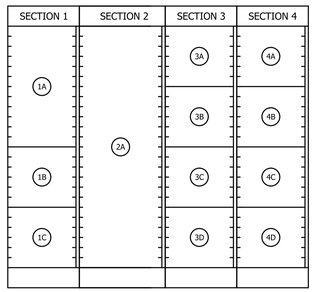

MCC-RO ELEVATION
NOT TO SCALE

REVISIONS

THE WOOTEN COMPANY
120 North Boylan Avenue Raleigh NC 27603-1423
919.828.0531 fax 919.834.3589
License Number: F-0115

BRUNSWICK REGIONAL WATER AND SEWER H2GO
BRUNSWICK COUNTY NORTH CAROLINA
CONTRACT No. 4
REVERSE OSMOSIS WATER TREATMENT PLANT
ELECTRICAL-RO TREATMENT BUILDING
MCC-RO SINGLE-LINE DIAGRAM & ELEVATION

NORTH CAROLINA PROFESSIONAL ENGINEER 16765 ROBERT E. EGAN

DESIGNED BY: JJS/REE
DRAWN BY: PMD/EML
CHECKED BY: REE
PROJECT NO.: 3081-AB
DATE: JUNE 7, 2020
SCALE: AS NOTED

SHEET 118 OF 181

E107

E107-MCC Single line diagram and elev

pdf2013.pltcfg
5.0000 ' / in.
began
6/2/2020 1:28:22 PM
T:\Projects\Brunswick_Regional_W&S_H2GO-3081\AB-Water_Supply&Treatment_Plant\Sheets\WTP\Electrical\RO Plant Elect Sheets.dgn

DocuSign Envelope ID: 90E8EB5B-D04D-407C-8823-7B551B888A3A

E108 - Panel Schedules and Risers

208/120 VOLTS, 3 PHASE, 4 WIRE — PANEL LP-RO-1, MAIN BREAKER, 150A 3P — TYPE: NEMA 12, MOUNT: SURFACE

DESCRIPTION	WIRE	TRIP	POLE	No.	VOLT-AMPERES A	VOLT-AMPERES B	VOLT-AMPERES C	No.	POLE	TRIP	WIRE	DESCRIPTION
RAW WATER PANEL	P-1165	20	1	1	1,200			2	1	20	P-1184	CALCITE EFFLUENT PANEL
FIT-120	P-1166	20	1	3		200		4	1	20	P-1185	LIT-161
COMBINED CONCENTRATE PANEL	P-1167	20	1	5			400	6	1	20	P-1186	FIT-167
COMBINED PERMEATE PANEL	P-1168	20	1	7	400			8	1	20	P-1187	FINISHED WATER EFFLUENT PANEL
FIT-117	P-1169	20	1	9		200		10	1	20	P-1188	LIT-170
LIT-111	P-1170	20	1	11			200	12	1	20	P-1189	CALCITE INFLUENT PANEL
CLEANING & SPENT SOLUTION PANEL	P-1171	20	1	13	400			14	1	20	P-1190	FIT-187
FIT-125	P-1172	20	1	15		200		16	1	20	P-1191	PLC-2-1
DPIT-127	P-1173	20	1	17			200	18	1	20	P-1192	RO TRAIN NO.1 INSTRUMENTS
LIT-103 & FIT-135	P-1174	20	1	19	400			20	1	20	P-1193	PLC-2-2
SCALE INHIBITOR SKID	P-1175	20	1	21		1,750		22	1	20	P-1194	RO TRAIN NO.2 INSTRUMENTS
LIT-131 & FIT-134	P-1176	20	1	23			400	24	1	20	P-1195	FUTURE PLC-2-3
CAUSTIC SKID	P-1177	20	1	25	1,750			26	1	20	P-1196	FUTURE RO TRAIN NO.3 INSTRUMENTS
LIT-129 & FIT-136	P-1178	20	1	27		400		28	1	20	P-1197	FUTURE PLC-2-4
CORROSION INHIBITOR SKID	P-1179	20	1	29			1,750	30	1	20	P-1198	FUTURE RO TRAIN NO.4 INSTRUMENTS
AIR DRYER	P-1180	20	1	31	1,500			32	1	20	P-1199	PLC-1
AIR CONTROL VALVE	P-1181	20	1	33		1,000		34	2	20	P-1200	PLC-3
CO2 SYSTEM PRESSURE SOLUTION CP	P-1182	20	1	35			1,750	36				
CO2 SYSTEM ALARM CP	P-1183	20	1	37	400			38	1	20	P-1201	GATE CONTROLLER
HS PUMP CONTROL VALVE 1	P-1159	20	1	39		400		40	1	20		SPARE
HS PUMP CONTROL VALVE 2	P-1160	20	1	41			400	42	1	20		SPARE
HS PUMP CONTROL VALVE 3	P-1161	20	1	43	400			44	1	20		SPARE
FUTURE HS PUMP CONTROL VALVE	P-1162	20	1	45		---		46	1	20		SPARE
FUTURE HS PUMP CONTROL VALVE	P-1163	20	1	47			---	48	1	20		SPARE
SPARE		20	1	49	---			50	1	20		SPARE
SPARE		20	1	51		---		52	1	20		SPARE
SPARE		20	1	53			---	54	1	20		SPARE

	A	B	C
TOTAL	6,450	4,150	5,100
PHASE TOTAL	12,000	9,850	10,300

A	B	C	
5,550	5,700	5,200	TOTAL
TOTAL LOAD			
32,150			

NOTES:
*10kAIC
*SPD - 100kA

TOTAL LOAD (AMPS)
89.2
59.5%

208/120 VOLTS, 3 PHASE, 4 WIRE — PANEL LP-RO-2, MAIN BREAKER, 150A 3P — TYPE: NEMA 12, MOUNT: SURFACE

DESCRIPTION	WIRE	TRIP	POLE	No.	VOLT-AMPERES A	VOLT-AMPERES B	VOLT-AMPERES C	No.	POLE	TRIP	WIRE	DESCRIPTION
LIGHTING - ELECTRICAL & HYPOCHLORITE	SEE NOTE 1	20	1	1	900			2	1	20	SEE NOTE 1	RECEPT. - ELECTRICAL ROOM
LIGHTING - CORRIDOR & JANITOR/CLOSET	SEE NOTE 1	20	1	3		600		4	1	20	SEE NOTE 1	RECEPT. - HYPOCHLORITE ROOM
LIGHTING - CHEMICAL ROOMS	SEE NOTE 1	20	1	5			900	6	1	20	SEE NOTE 1	RECEPT. - STORAGE/JANITOR/CORRIDOR
LIGHTING - RO TREATMENT ROOM	SEE NOTE 1	20	2	7	1,200			8	1	20	SEE NOTE 1	RECEPT. - CAUSTIC ROOM
				9		1,200		10	1	20	SEE NOTE 1	RECEPT. - CORROSION ROOM
LIGHTING - RO TREATMENT ROOM	SEE NOTE 1	20	2	11			1,200	12	1	20	SEE NOTE 1	RECEPT. - SHOP/STORAGE ROOM
				13	1,200			14	1	20	SEE NOTE 1	RECEPT. - RO TREATMENT ROOM
LIGHTING - EXTERIOR	SEE NOTE 3	20	1	15		600		16	1	20	SEE NOTE 1	RECEPT. - RO TREATMENT ROOM
LIGHTING - EXTERIOR	SEE NOTE 3	20	1	17			600	18	1	20	SEE NOTE 1	RECEPT. - EXTERIOR
CO2 FACILITY LIGHTING & RECEPT.	P-1210	20	1	19	1,400			20	1	20	P-1219	BACKFLOW PREVENTER VAULT
RAW WATER VAULT	P-1211	20	1	21		850		22	1	20	P-1220	BYPASS VAULT
FINISHED WATER VAULT	P-1212	20	1	23			850	24	1	20	P-1221	FSH-181 & FSH-182
CHEMICAL FEED VAULT	P-1213	20	1	25	850			26	1	20	P-1222	FSH-183, FSH-184, FSH-185, FSH-186
SYSTEM WATER METER VAULT	P-1214	20	1	27		850		28	1	20	P-1224	EF-01 STARTER
LIT-324 & LIT-325	P-1215	20	1	29			400	30	1	20	P-1226	EF-02 STARTER
HYPOCHLORITE METERING PUMP NO.1 VFD	P-1216	20	2	31	1,500			32	1	20	P-1228	EF-03 STARTER
				33		1,500		34	1	20	P-1230	EF-04 STARTER
HYPOCHLORITE METERING PUMP NO.2 VFD	P-1217	20	2	35			1,500	36	1	20		SPARE
				37	1,500			38	1	20	P-1234	EF-06 DISCONNECT
HYPOCHLORITE METERING PUMP NO.3 VFD	P-1218	20	2	39		1,500		40	1	20	SEE NOTE 1	RECEPT. - RO TREATMENT ROOM RACKS
				41			1,500	42	1	20		SPARE
SPARE		20	1	43	---			44	1	20		SPARE
SPARE		20	1	45		---		46	1	20		SPARE
SPARE		20	1	47			---	48	1	20		SPARE
SPARE		20	1	49	---			50	1	20		SPARE
SPARE		20	1	51		---		52	1	20		SPARE
SPARE		20	1	53			---	54	1	20		SPARE

	A	B	C
TOTAL	8,550	7,100	6,950
PHASE TOTAL	13,320	11,670	11,010

A	B	C	
4,770	4,570	4,060	TOTAL
TOTAL LOAD			
36,000			

NOTES:
*10kAIC
*SPD - 100kA

TOTAL LOAD (AMPS)
99.9
66.6%

208/120 VOLTS, 3 PHASE, 4 WIRE — PANEL LP-ADM, MAIN BREAKER, 150A 3P — TYPE: NEMA 12, MOUNT: SURFACE

DESCRIPTION	WIRE	TRIP	POLE	No.	VOLT-AMPERES A	VOLT-AMPERES B	VOLT-AMPERES C	No.	POLE	TRIP	WIRE	DESCRIPTION
LIGHTING - TRAINING/MEETING ROOM	SEE NOTE 1	20	1	1	750			2	1	20	SEE NOTE 1	RECEPT. - TRAINING/MEETING ROOM
LIGHTING - BREAK/LOBBY/CORRIDOR	SEE NOTE 1	20	1	3		750		4	1	20	SEE NOTE 1	RECEPT. - TRAINING/MEETING ROOM
LIGHTING - BATHROOMS/LOCKER	SEE NOTE 1	20	1	5			500	6	1	20	SEE NOTE 1	RECEPT. - BREAK ROOM
LIGHTING - MECH/ELEC/SERVER	SEE NOTE 1	20	1	7	500			8	1	20	SEE NOTE 1	RECEPT. - BREAK ROOM
LIGHTING - OFFICE/CONTROL ROOM	SEE NOTE 1	20	1	9		750		10	1	20	SEE NOTE 1	RECEPT. - LOBBY/CORRIDOR
LIGHTING - LABORATORY	SEE NOTE 1	20	1	11			500	12	1	20	SEE NOTE 1	RECEPT. BATHROOMS/LOCKER
LIGHTING - MEZZANINE	SEE NOTE 1	20	1	13	---			14	1	20	SEE NOTE 1	RECEPT. - MECH/ELEC
FCU-01	P-1230	20	2	15		500		16	1	20	SEE NOTE 1	RECEPT. - SERVER
				17			500	18	1	20	SEE NOTE 1	RECEPT. - OFFICE
FCU-02	P-1231	20	2	19	500			20	1	20	SEE NOTE 1	RECEPT. - OFFICE
				21		500		22	1	20	SEE NOTE 1	RECEPT. - LABORATORY
FCU-03	P-1232	20	2	23			500	24	1	20	SEE NOTE 1	RECEPT. - LABORATORY
				25	500			26	1	20	SEE NOTE 1	DISH WASHING MACH 115
FCU-04	P-1233	20	2	27		500		28	1	20	P-1236	FSH-180
				29			500	30	1	20	SEE NOTE 1	VENDING 104
FCU-05	P-1234	20	2	31	500			32	1	20	SEE NOTE 1	VENDING 104
				33		500		34	1	20	SEE NOTE 1	VENDING 104
BS-01	P-1235	20	2	35			500	36	1	20	SEE NOTE 1	FLOOR RECPTACLES 114
				37	500			38	1	20	SEE NOTE 1	RECEPTACLES MEZZANINE
CIRC PUMP	SEE NOTE 1	20	1	39		150		40	1	20	SEE NOTE 1	EXTERIOR RECEPTACLES
NETWORK ROOM 112 L6-30R RECEPTACLE	SEE NOTE 2	30	2	41			1,500	42	1	20	SEE NOTE 1	EWC
				43	1,500			44	1	20	SEE NOTE 1	REFRIGERATOR 115
ACCESS CONTORL PANEL	SEE NOTE 1	20	1	45		200		46	1	20		SPARE
SPARE		20	1	47			---	48	1	20		SPARE
SPARE		20	1	49	---			50	1	20		SPARE
SPARE		20	1	51		---		52	1	20		SPARE
SPARE		20	1	53			---	54	1	20		SPARE

	A	B	C
TOTAL	4,750	3,850	4,500
PHASE TOTAL	11,790	8,870	10,490

A	B	C	
7,040	5,020	5,990	TOTAL
TOTAL LOAD			
31,150			

NOTES:
*10kAIC
*SPD - 100kA

TOTAL LOAD (AMPS)
86.5
57.6%

480 VOLTS, 3 PHASE, 4 WIRE — PANEL PP-RO, MAIN LUGS ONLY, 225A — TYPE: NEMA 12, MOUNT: SURFACE

DESCRIPTION	WIRE	TRIP	POLE	No.	VOLT-AMPERES A	VOLT-AMPERES B	VOLT-AMPERES C	No.	POLE	TRIP	WIRE	DESCRIPTION
LIGHTING CONTACTOR LC-RO	P-1116	20	3	1				2				
				3				4	3	20	P-1117	SUMP PUMPS CP
				5				6				
AIR COMPRESSOR	P-1120	20	3	7	2,105			8				
				9		2,105		10	3	20	P-1121	MOV 109 & MOV 108
				11			2,105	12				
MOV 1112	P-1124	20	3	13	554			14				
				15		554		16	3	20	P-1125	MOVs 201-1, 202-1, 207-1 & 218-1
				17			554	18				
MOVs 201-2, 202-2, 207-2 & 218-2	P-1132	20	3	19	700			20				
				21		700		22	3	20	P-1139	FUTURE MOV 201-3 & MOV 218-3
				23			700	24				
FUTURE MOV 201-4 & MOV 218-4	P-1141	30	3	25	---			26				
				27		---		28	3	20	P-1143	WATER HEATER P-13
				29			---	30				
DOOR OPERATORS	P-1144	30	3	31	554			32				
				33		554		34	3	20	P-1146	DOOR OPERATORS
				35			554	36				
DOOR OPERATORS	P-1148	30	3	37	554			38				
				39		554		40	3	20	P-1150	DOOR OPERATORS
				41			554	42				
DOOR OPERATORS	P-1152	30	3	43	554			44				
				45		554		46	3	20		SPARE
				47			554	48				
SPARE		30	3	49	---			50				
				51		---		52	3	20		SPARE
				53			---	54				

	A	B	C
TOTAL	5,021	5,021	5,021
PHASE TOTAL	12,934	12,934	12,934

A	B	C	
7,913	7,913	7,913	TOTAL
TOTAL LOAD			
38,803			

NOTES:
*65kAIC
*SPD - 200kA

TOTAL LOAD (AMPS)
46.7
20.7%

480 VOLTS, 3 PHASE, 4 WIRE — PANEL PP-HVAC, MAIN LUGS ONLY, 400A — TYPE: NEMA 12, MOUNT: SURFACE

DESCRIPTION	WIRE	TRIP	POLE	No.	VOLT-AMPERES A	VOLT-AMPERES B	VOLT-AMPERES C	No.	POLE	TRIP	WIRE	DESCRIPTION
VRV-OU-01	P-1094	40	3	1	10,000			2				
				3		10,000		4	3	50	P-1095	DHU-01
				5			10,000	6				
DHU-02	P-1096	50	3	7	11,750			8				
				9		11,750		10	3	50	P-1097	DHU-03
				11			11,750	12				
DHU-OU-01	P-1098	15	3	13	700			14				
				15		700		16	3	15	P-1099	DHU-OU-02
				17			700	18				
DHU-OU-03	P-1100	15	3	19	700			20				
				21		700		22	3	40	P-1101	CRAC-01
				23			700	24				
OU-01	P-1102	20	3	25	675			26				
				27		675		28	2	20	P-1103	ERH-01
				29			675	30				
ERH-02	P-1104	20	2	31	3,750			32	2	20	P-1105	ERH-03
				33		3,750		34	1	20	P-1107	ERH-05
ERH-04	P-1106	20	1	35			3,200	36	1	20	P-1109	ERH-07
ERH-06	P-1108	20	1	37	3,200			38	1	20	P-1111	ERH-09
ERH-08	P-1110	20	1	39		3,200		40	1	20	P-1113	ERH-12
ERH-10,11	P-1112	20	1	41			1,000	42	1	20		SPARE
ERH-13,14,15,16	P-1114	20	1	43	3,000			44	1	20		SPARE
SPARE		20	1	45		---		46	1	20		SPARE
SPARE		20	1	47			---	48				SPACE
SPACE				49	---			50				SPACE
SPACE				51		---		52				SPACE
SPACE				53			---	54				SPACE

	A	B	C
TOTAL	33,775	30,775	28,025
PHASE TOTAL	74,883	70,058	67,883

A	B	C	
41,108	39,283	39,858	TOTAL
TOTAL LOAD			
212,825			

NOTES:
*65kAIC
*SPD - 200kA

TOTAL LOAD (AMPS)
256.0
64.0%

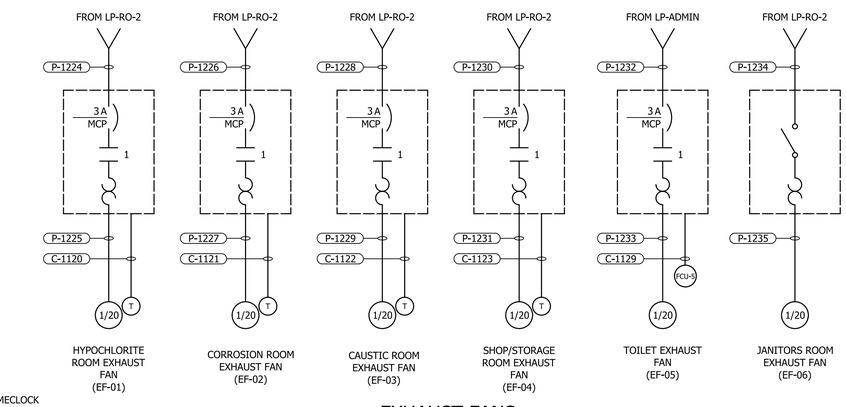

NOTES:

1. 2#12, #12GND, 3/4" C
2. 2#10, #10GND, 3/4" C
3. 2#10, #10GND, 3/4" C., VIA TIMECLOCK

EXHAUST FANS
RISER DIAGRAM

REVISIONS

THE WOOTEN COMPANY
120 North Boylan Avenue Raleigh, NC 27603-1423
919.828.0531 Fax 919.831.1589
License Number: F-0115

BRUNSWICK REGIONAL WATER AND SEWER H2GO
BRUNSWICK COUNTY — NORTH CAROLINA
CONTRACT No. 4
REVERSE OSMOSIS WATER TREATMENT PLANT

ELECTRICAL-RO TREATMENT BUILDING
PANEL SCHEDULES & RISER DIAGRAMS

NORTH CAROLINA PROFESSIONAL ENGINEER SEAL 16765 DocuSigned by: ENGINEER ROBERT E. EVANS

DESIGNED BY: JJS/REE
DRAWN BY: PMD/EML
CHECKED BY: REE
PROJECT NO.: 3081-AB
DATE: JUNE 7, 2020
SCALE: AS NOTED

SHEET 119 OF 181

E108

pdf2013.pltcfg
10.0000 " / in.
began
6/2/2020 1:28:23 PM
T:\Projects\Brunswick_Regional_W&S_H2GO-3081\AB-Water_Supply&Treatment_Plant\Sheets\WTP\Electrical\RO Plant Elect Sheets.dgn

DocuSign Envelope ID: 15CE123C-6E50-4D83-BC50-B8D25C91C3E7

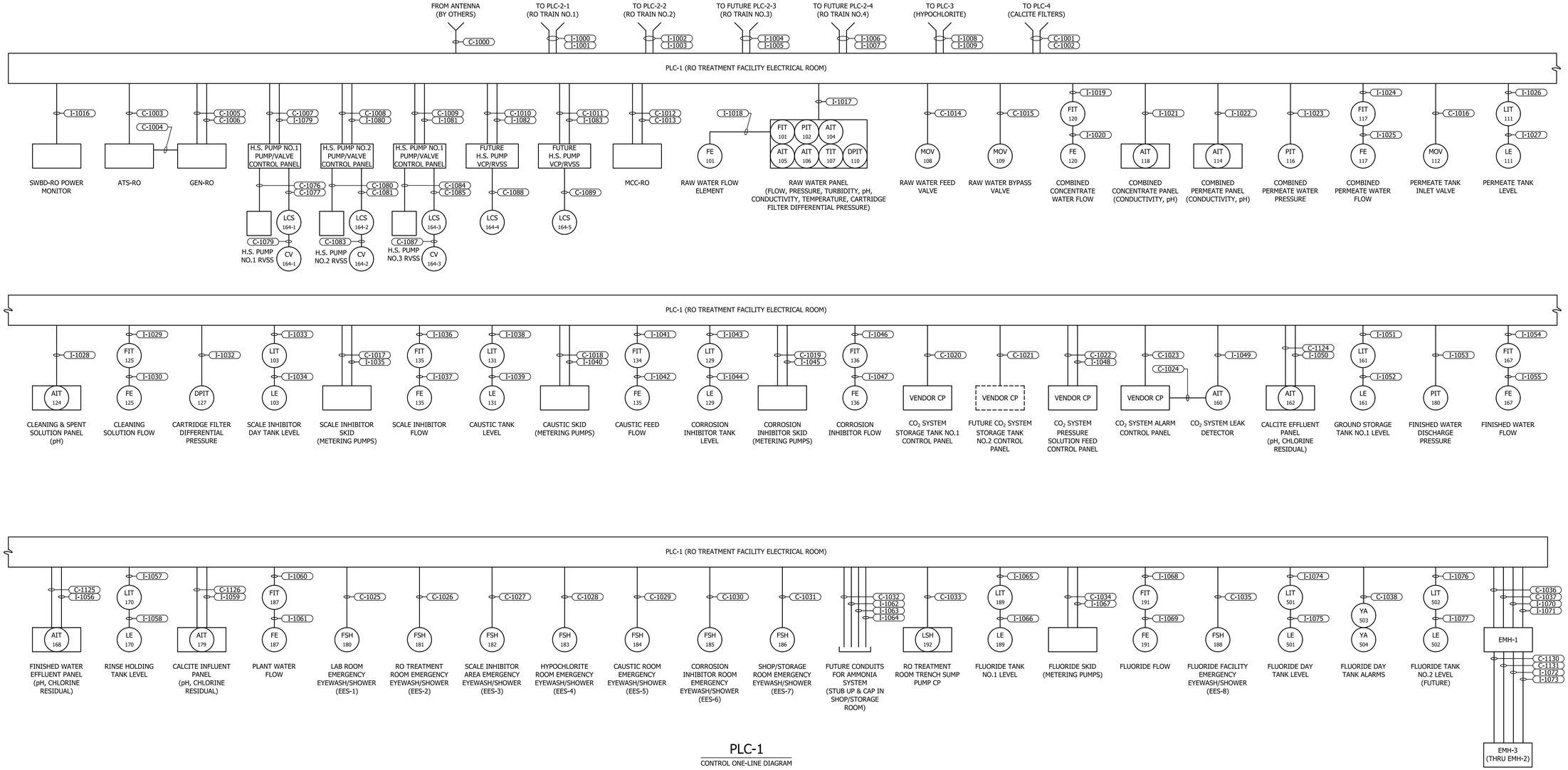

PLC-1
CONTROL ONE-LINE DIAGRAM

REVISIONS

THE WOOTEN COMPANY
120 North Boylan Avenue Raleigh, NC 27603-1423
919.828.0531 Fax 919.831.1589
License Number: F-1113

BRUNSWICK REGIONAL WATER AND SEWER H2GO
BRUNSWICK COUNTY NORTH CAROLINA
CONTRACT No. 4
REVERSE OSMOSIS WATER TREATMENT PLANT
ELECTRICAL-RO TREATMENT BUILDING CONTROL ONE-LINE DIAGRAMS

NORTH CAROLINA PROFESSIONAL ENGINEER SEAL 16765 ROBERT E. GANT

DESIGNED BY: JJS/REE
DRAWN BY: PMD/EML
CHECKED BY: REE
PROJECT NO.: 3081-AB
DATE: JUNE 7, 2020
SCALE: AS NOTED

SHEET 120 OF 181

E109

pdf2013.pltcfg
5.0000 " / in.
began
9:48:01 AM
6/3/2020
T:\Projects\Brunswick_Regional_W&S_H2GO-3081\AB-Water_Supply&Treatment_Plant Sheets\WTP\Electrical\RO Plant Elect Sheets.dgn

DocuSign Envelope ID: 90E8EB5B-D04D-407C-8823-7B551B888A3A

E110-Control One-Line Diagrams

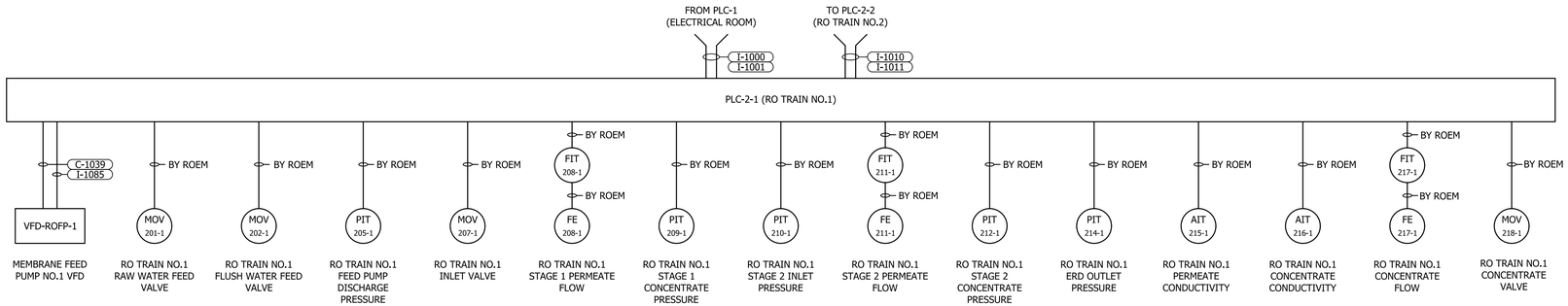

PLC-2-1
CONTROL ONE-LINE DIAGRAM

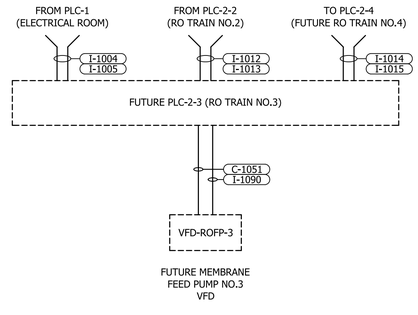

PLC-2-3
CONTROL ONE-LINE DIAGRAM

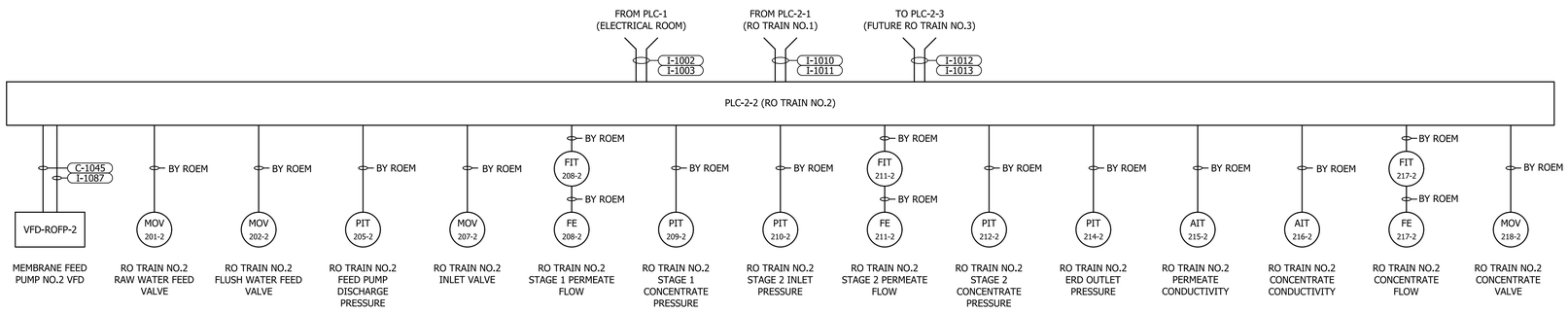

PLC-2-2
CONTROL ONE-LINE DIAGRAM

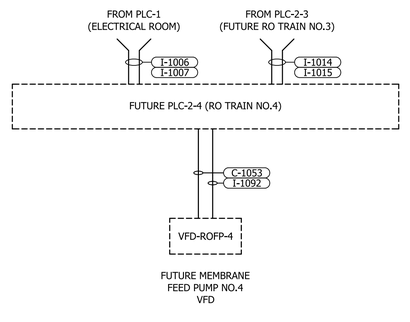

PLC-2-4
CONTROL ONE-LINE DIAGRAM

REVISIONS

THE WOOTEN COMPANY
120 North Boylan Avenue Raleigh, NC 27603-1423
919.828.0531 Fax 919.834.5389
License Number: F-0113

BRUNSWICK REGIONAL WATER AND SEWER H2GO
BRUNSWICK COUNTY NORTH CAROLINA
CONTRACT No. 4
REVERSE OSMOSIS WATER TREATMENT PLANT

ELECTRICAL-RO TREATMENT BUILDING
CONTROL ONE-LINE DIAGRAMS

NORTH CAROLINA PROFESSIONAL ENGINEER 16765 Docusigned by: ROBERT E. EGAN

DESIGNED BY: JJS/REE
DRAWN BY: PMD/EML
CHECKED BY: REE
PROJECT NO.: 3081-AB
DATE: JUNE 7, 2020
SCALE: AS NOTED

SHEET 121 OF 181

E110

pdf2013.pltcfg
5.0000 " / in.
began 1:28:47 PM
6/2/2020
T:\Projects\Brunswick_Regional_W&S_H2GO-3081\AB-Water_Supply&Treatment_Plant\Sheets\WTP\Electrical\RO Plant Elect Sheets.dgn

DocuSign Envelope ID: 90E8EB5B-D04D-407C-8823-7B551B888A3A

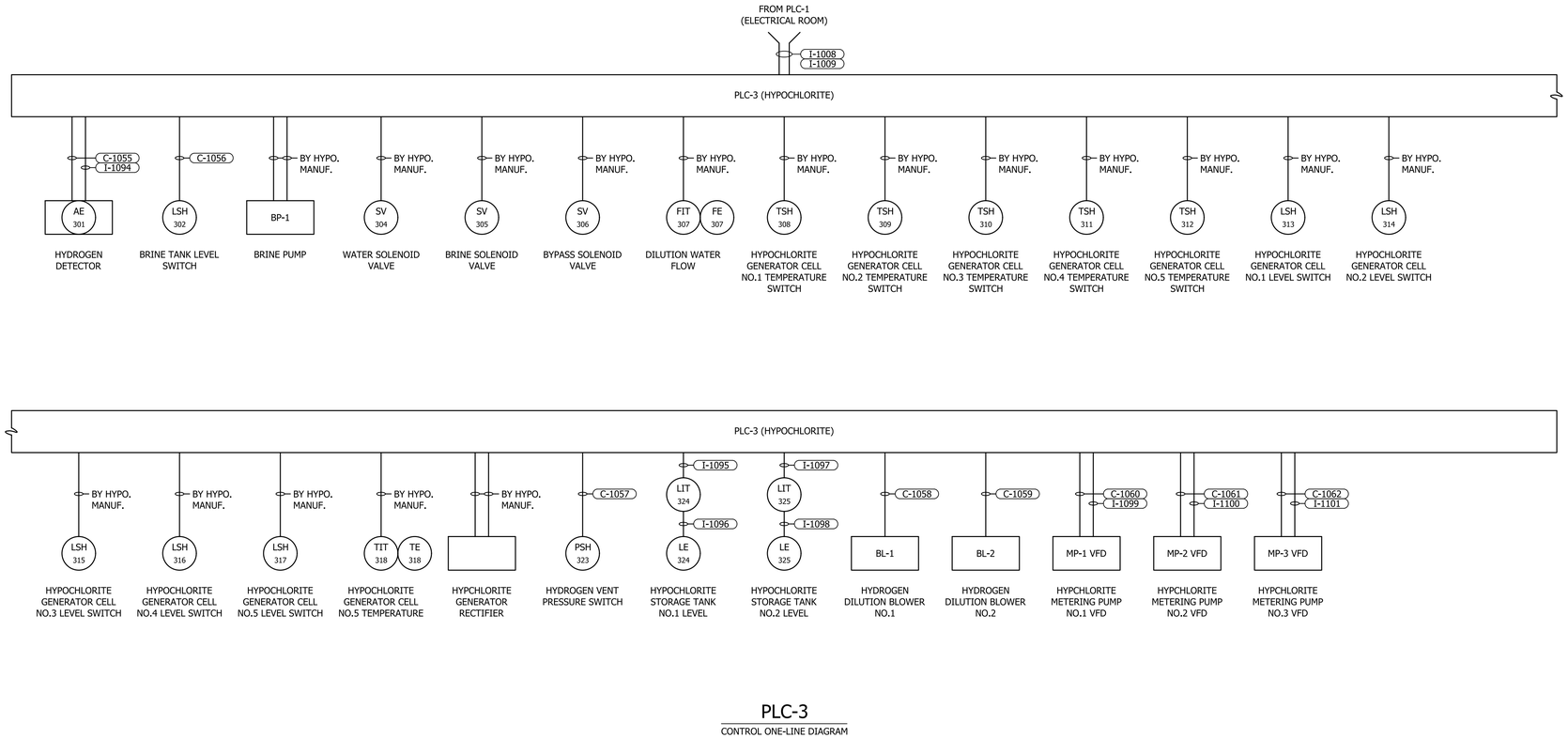

PLC-3
CONTROL ONE-LINE DIAGRAM

REVISIONS

THE WOOTEN COMPANY
120 North Boylan Avenue Raleigh, NC 27603-1423
919.828.0531 Fax 919.831.1589
License Number: F-0115

BRUNSWICK REGIONAL WATER AND SEWER H2GO
BRUNSWICK COUNTY NORTH CAROLINA
CONTRACT No. 4
REVERSE OSMOSIS WATER TREATMENT PLANT

ELECTRICAL-RO TREATMENT BUILDING CONTROL ONE-LINE DIAGRAMS

NORTH CAROLINA PROFESSIONAL ENGINEER 16765 DocuSigned by: ROBERT E. EGAN

DESIGNED BY: JJS/REE
DRAWN BY: PMD/EML
CHECKED BY: REE
PROJECT NO.: 3081-AB
DATE: JUNE 7, 2020
SCALE: AS NOTED

SHEET 122 OF 181

E111

E111-Control One-Line Diagrams

pdf2013.pltcfg
5.0000 " / in.
began 1:28:48 PM
6/2/2020
T:\Projects\Brunswick_Regional_W&S_H2GO-3081\AB-Water_Supply&Treatment_Plant\Sheets\WTP\Electrical\RO Plant Elect Sheets.dgn

DocuSign Envelope ID: 90E8EB5B-D04D-407C-8823-7B551B888A3A

E112-Pump_Ctrl_Schematics

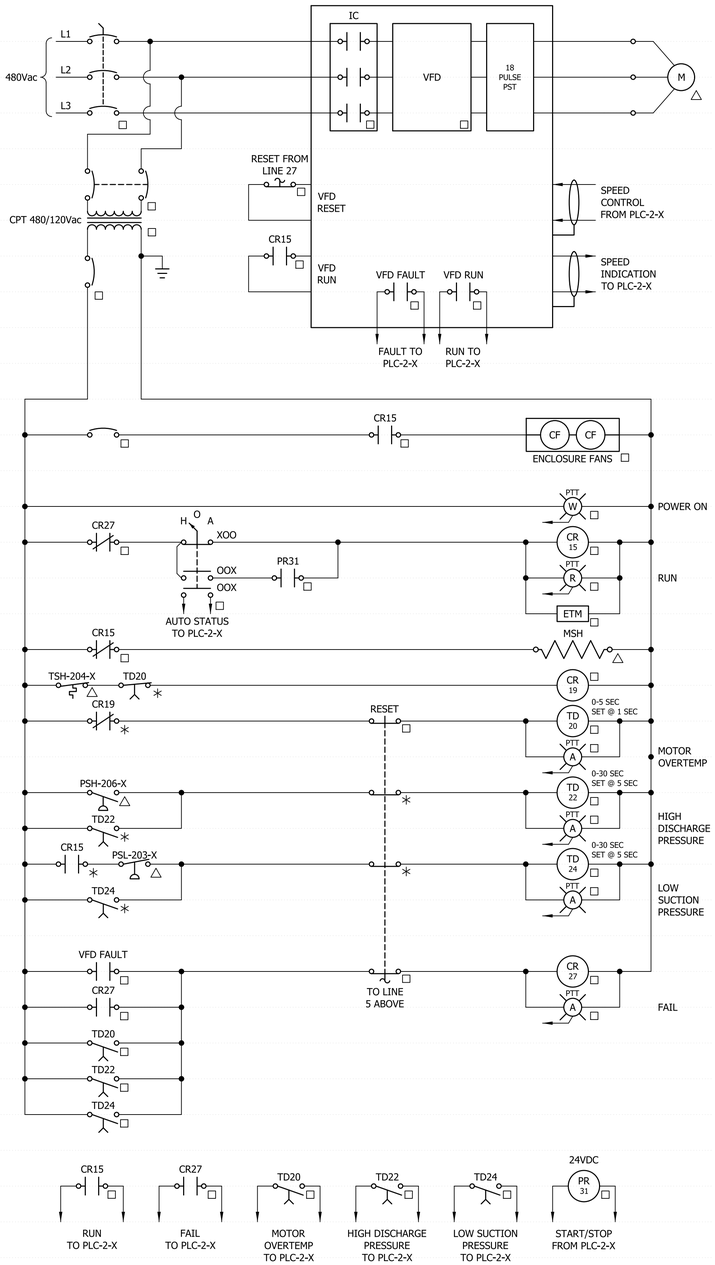

MEMBRANE FEED PUMPS - ROFP-1 & ROFP-2

ELEMENTARY CONTROL SCHEMATIC

NOTE: REPLACE X WITH MEMBRANE FILTER NO.

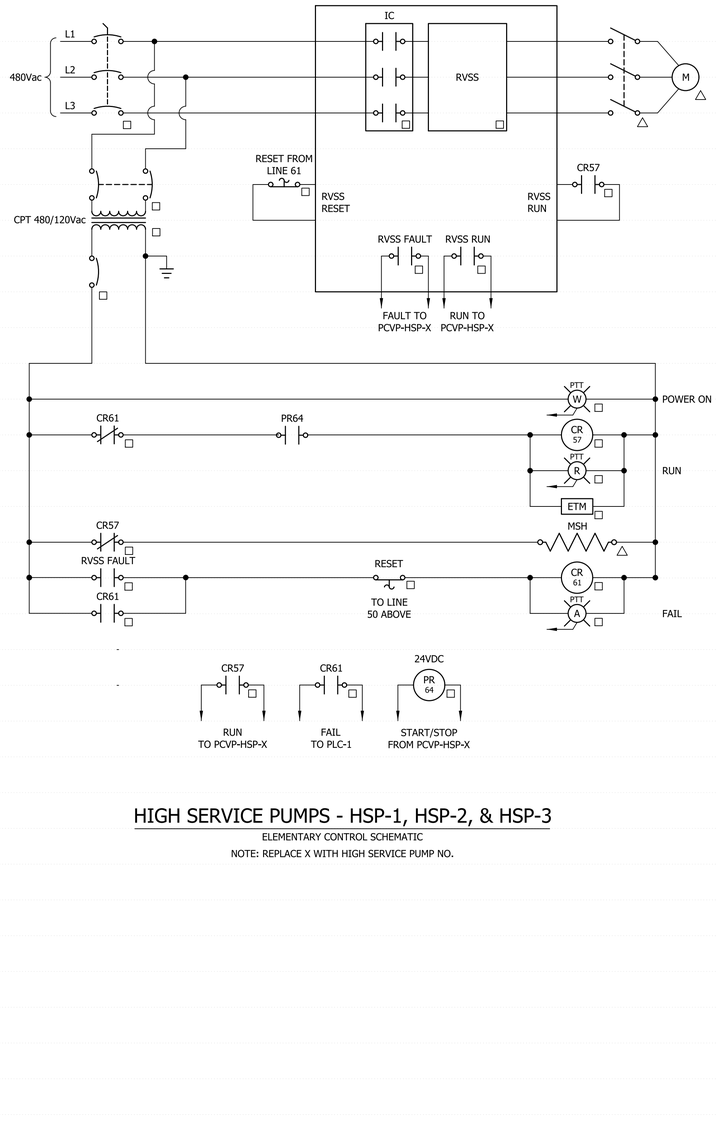

HIGH SERVICE PUMPS - HSP-1, HSP-2, & HSP-3

ELEMENTARY CONTROL SCHEMATIC

NOTE: REPLACE X WITH HIGH SERVICE PUMP NO.

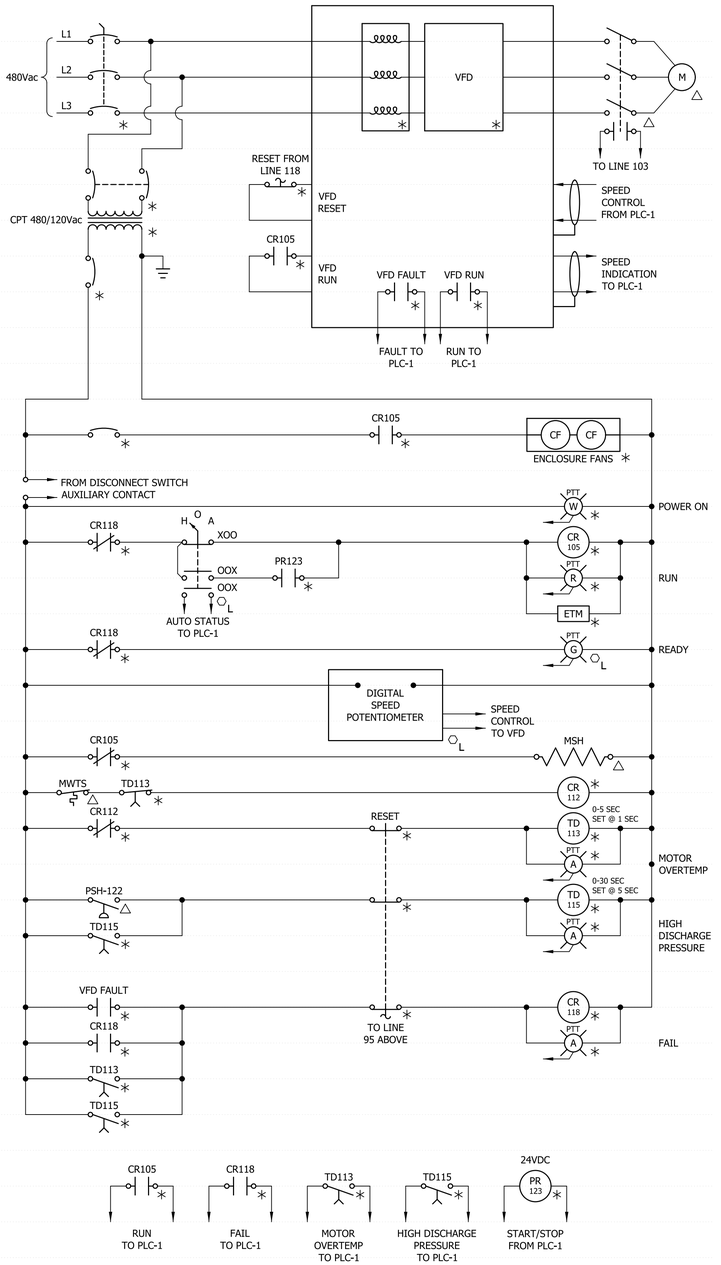

CLEAN-IN-PLACE PUMP - CP-1

ELEMENTARY CONTROL SCHEMATIC

REVISIONS

THE WOOTEN COMPANY
120 North Boylan Avenue Raleigh, NC 27603-1423
919.828.0531 Fax 919.831.1589
License Number: F-0115

BRUNSWICK REGIONAL WATER AND SEWER H2GO
BRUNSWICK COUNTY NORTH CAROLINA

CONTRACT No. 4

REVERSE OSMOSIS WATER TREATMENT PLANT

ELECTRICAL-RO TREATMENT BUILDING
ELEMENTARY CONTROL SCHEMATICS

NORTH CAROLINA PROFESSIONAL ENGINEER
16765
DocuSigned by:
ROBERT E. CLARK, JR.

DESIGNED BY: JJS/REE
DRAWN BY: PMD/EML
CHECKED BY: REE
PROJECT NO.: 3081-AB
DATE: JUNE 7, 2020
SCALE: AS NOTED

SHEET 123 OF 181

E112

pdf2013.pltcfg
5.0000 " / in.
began
6/2/2020 1:28:50 PM
T:\Projects\Brunswick_Regional_W&S_H2GO-3081\AB-Water_Supply&Treatment_Plant\Sheets\WTP\Electrical\RO Plant Elect Sheets.dgn

DocuSign Envelope ID: 90E8EB5B-D04D-407C-8823-7B551B888A3A

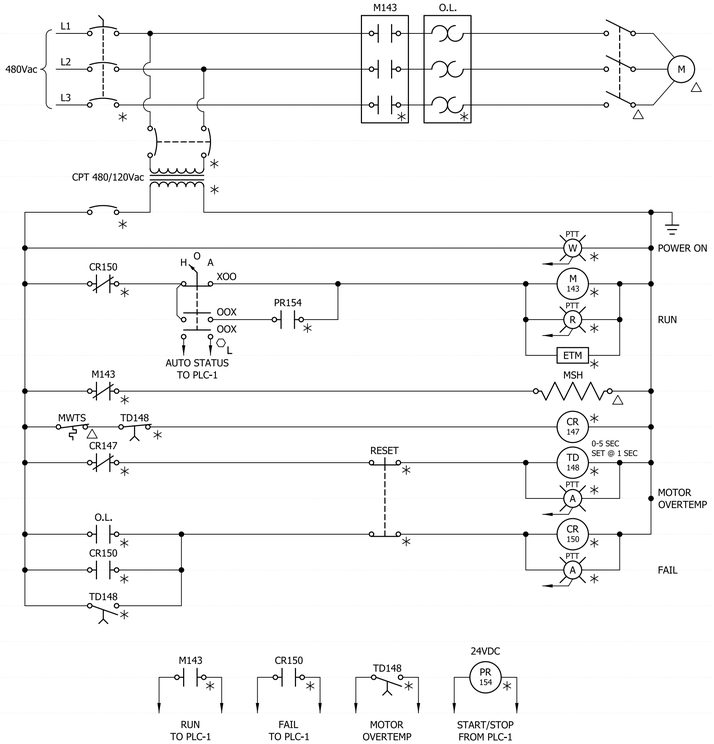

FLP-1, FLP-2, RWSP-1, & MIX-1

ELEMENTARY CONTROL SCHEMATIC

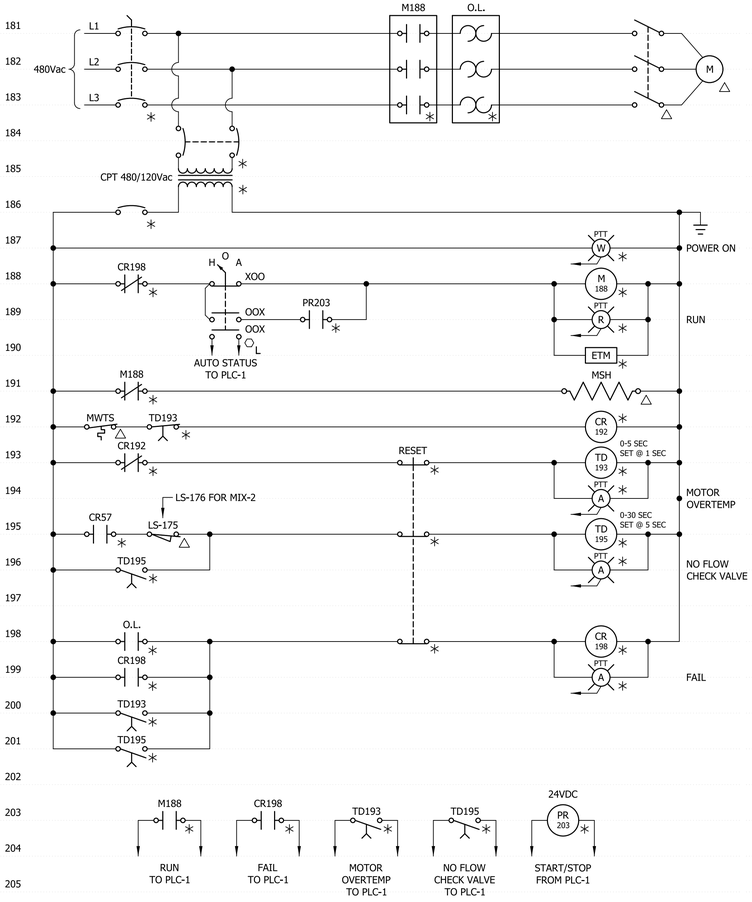

BACKWASH HOLDING BASIN PUMPS - WP-1 & WP-2

ELEMENTARY CONTROL SCHEMATIC

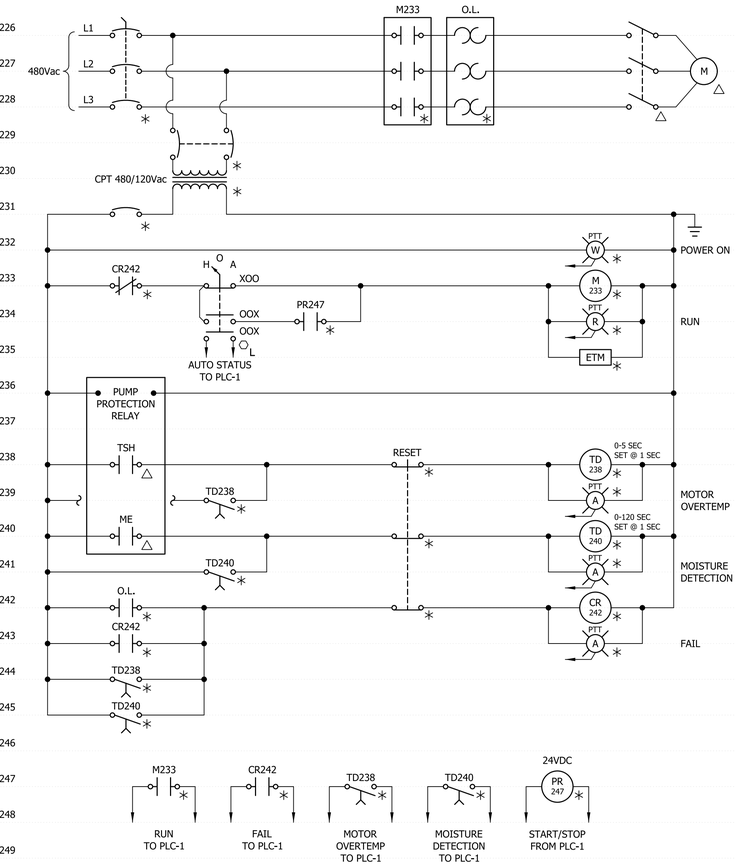

BACKWASH HOLDING BASIN MIXER - MIX-2

ELEMENTARY CONTROL SCHEMATIC

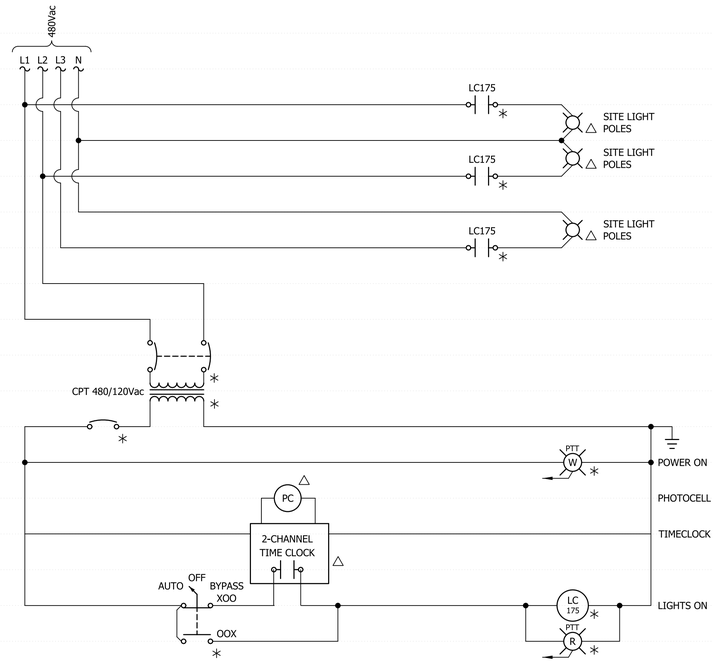

LIGHTING CONTACTOR (LC-RO)

ELEMENTARY CONTROL SCHEMATIC

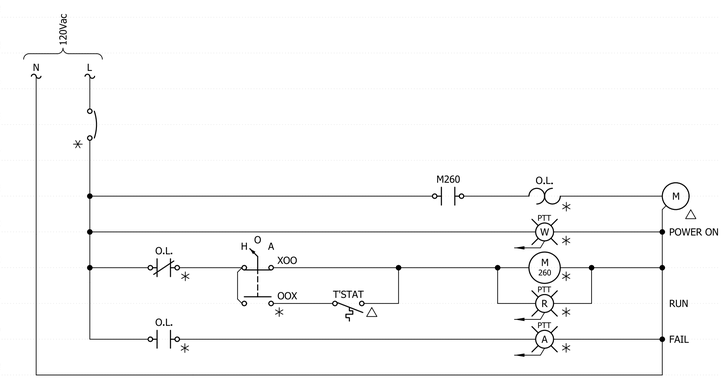

EXHAUST FANS - EF-01, EF-02, EF-03, & EF-04

ELEMENTARY CONTROL SCHEMATIC

REVISIONS

THE WOOTEN COMPANY
120 North Boylan Avenue Raleigh, NC 27603-1423
919.828.0531 Fax 919.831.3589
License Number: F-0115

BRUNSWICK REGIONAL WATER AND SEWER H2GO
BRUNSWICK COUNTY NORTH CAROLINA

CONTRACT No. 4

REVERSE OSMOSIS WATER TREATMENT PLANT

ELECTRICAL-RO TREATMENT BUILDING
ELEMENTARY CONTROL SCHEMATICS

NORTH CAROLINA PROFESSIONAL ENGINEER 16765 DocuSigned by: ROBERT E. EGAN

DESIGNED BY:	JJS/REE
DRAWN BY:	PMD/EML
CHECKED BY:	REE
PROJECT NO.:	3081-AB
DATE:	JUNE 7, 2020
SCALE:	AS NOTED

SHEET 124 OF 181

E113

E113-Misc_Ctrl_Schematics

pdf2013.pltcfg
5.0000 ' / in.
began
6/2/2020 1:28:51 PM
T:\Projects\Brunswick_Regional_W&S_H2GO-3081\AB-Water_Supply&Treatment_Plant\Sheets\WTP\Electrical\RO Plant Elect Sheets.dgn

DocuSign Envelope ID: 90E8EB5B-D04D-407C-8823-7B551B888A3A

E114-Conduit and Wire Schedule

CONDUIT NO.	SIZE	FROM	TO	CONDUCTORS	REMARKS
P-1000	4"	UTILITY TRANSFORMER/METERING	SWBD-RO	4#500kcmil	
P-1001	4"	UTILITY TRANSFORMER/METERING	SWBD-RO	4#500kcmil	
P-1002	4"	UTILITY TRANSFORMER/METERING	SWBD-RO	4#500kcmil	
P-1003	4"	UTILITY TRANSFORMER/METERING	SWBD-RO	4#500kcmil	
P-1004	4"	UTILITY TRANSFORMER/METERING	SWBD-RO	4#500kcmil	
P-1005	4"	UTILITY TRANSFORMER/METERING	SWBD-RO	4#500kcmil	
P-1006	4"	UTILITY TRANSFORMER/METERING	SWBD-RO	4#500kcmil	
P-1007	4"	UTILITY TRANSFORMER/METERING	SWBD-RO	4#500kcmil	
P-1008	4"	UTILITY TRANSFORMER/METERING	SWBD-RO	4#500kcmil	
P-1009	4"	UTILITY TRANSFORMER/METERING	SWBD-RO	4#500kcmil	
P-1010	4"	UTILITY TRANSFORMER/METERING	SWBD-RO	EMPTY W/ PULLSTRING	SPARE
P-1011	4"	UTILITY TRANSFORMER/METERING	SWBD-RO	EMPTY W/ PULLSTRING	SPARE
P-1012	4"	GEN-RO	SWBD-RO	4#500kcmil, #500kcmilGND	
P-1013	4"	GEN-RO	SWBD-RO	4#500kcmil, #500kcmilGND	
P-1014	4"	GEN-RO	SWBD-RO	4#500kcmil, #500kcmilGND	
P-1015	4"	GEN-RO	SWBD-RO	4#500kcmil, #500kcmilGND	
P-1016	4"	GEN-RO	SWBD-RO	4#500kcmil, #500kcmilGND	
P-1017	4"	GEN-RO	SWBD-RO	4#500kcmil, #500kcmilGND	
P-1018	4"	GEN-RO	SWBD-RO	4#500kcmil, #500kcmilGND	
P-1019	4"	GEN-RO	SWBD-RO	4#500kcmil, #500kcmilGND	
P-1020	4"	GEN-RO	SWBD-RO	4#500kcmil, #500kcmilGND	
P-1021	4"	GEN-RO	SWBD-RO	4#500kcmil, #500kcmilGND	
P-1022	4"	GEN-RO	SWBD-RO	EMPTY W/ PULLSTRING	SPARE
P-1023	4"	GEN-RO	SWBD-RO	EMPTY W/ PULLSTRING	SPARE
P-1024				NOT USED	
P-1025				NOT USED	
P-1026				NOT USED	
P-1027				NOT USED	
P-1028				NOT USED	
P-1029				NOT USED	
P-1030				NOT USED	
P-1031				NOT USED	
P-1032				NOT USED	
P-1033				NOT USED	
P-1034				NOT USED	
P-1035				NOT USED	
P-1036	3"	SWBD-RO	MEMBRANE FEED PUMP NO.1 VFD	3#500kcmil, #1/0GND	
P-1037	3"	SWBD-RO	MEMBRANE FEED PUMP NO.1 VFD	3#500kcmil, #1/0GND	
P-1038	3"	MEMBRANE FEED PUMP NO.1 VFD	MEMBRANE FEED PUMP NO.1	3#500kcmil, #1/0GND	
P-1039	3"	MEMBRANE FEED PUMP NO.1 VFD	MEMBRANE FEED PUMP NO.1	3#500kcmil, #1/0GND	
P-1040	3"	SWBD-RO	MEMBRANE FEED PUMP NO.2 VFD	3#500kcmil, #1/0GND	
P-1041	3"	SWBD-RO	MEMBRANE FEED PUMP NO.2 VFD	3#500kcmil, #1/0GND	
P-1042	3"	MEMBRANE FEED PUMP NO.2 VFD	MEMBRANE FEED PUMP NO.2	3#500kcmil, #1/0GND	
P-1043	3"	MEMBRANE FEED PUMP NO.2 VFD	MEMBRANE FEED PUMP NO.2	3#500kcmil, #1/0GND	
P-1044	3"	SWBD-RO	FUTURE MEMBRANE FEED PUMP NO.3 VFD	EMPTY W/ PULLSTRING	FUTURE
P-1045	3"	SWBD-RO	FUTURE MEMBRANE FEED PUMP NO.3 VFD	EMPTY W/ PULLSTRING	FUTURE
P-1046	3"	FUTURE MEMBRANE FEED PUMP NO.3 VFD	FUTURE MEMBRANE FEED PUMP NO.3	EMPTY W/ PULLSTRING	FUTURE
P-1047	3"	FUTURE MEMBRANE FEED PUMP NO.3 VFD	FUTURE MEMBRANE FEED PUMP NO.3	EMPTY W/ PULLSTRING	FUTURE
P-1048	3"	SWBD-RO	FUTURE MEMBRANE FEED PUMP NO.4 VFD	EMPTY W/ PULLSTRING	FUTURE
P-1049	3"	SWBD-RO	FUTURE MEMBRANE FEED PUMP NO.4 VFD	EMPTY W/ PULLSTRING	FUTURE
P-1050	3"	FUTURE MEMBRANE FEED PUMP NO.4 VFD	FUTURE MEMBRANE FEED PUMP NO.4	EMPTY W/ PULLSTRING	FUTURE
P-1051	3"	FUTURE MEMBRANE FEED PUMP NO.4 VFD	FUTURE MEMBRANE FEED PUMP NO.4	EMPTY W/ PULLSTRING	FUTURE
P-1052	2"	SWBD-RO	HIGH SERVICE PUMP NO.1 RVSS	3#4/0, #2GND	
P-1053	2"	SWBD-RO	HIGH SERVICE PUMP NO.1 RVSS	3#4/0, #2GND	
P-1054	2"	HIGH SERVICE PUMP NO.1 RVSS	HIGH SERVICE PUMP NO.1	3#4/0, #2GND	VIA DSW
P-1055	2"	HIGH SERVICE PUMP NO.1 RVSS	HIGH SERVICE PUMP NO.1	3#4/0, #2GND	VIA DSW
P-1056	2"	SWBD-RO	HIGH SERVICE PUMP NO.2 RVSS	3#4/0, #2GND	
P-1057	2"	SWBD-RO	HIGH SERVICE PUMP NO.2 RVSS	3#4/0, #2GND	
P-1058	2"	HIGH SERVICE PUMP NO.2 RVSS	HIGH SERVICE PUMP NO.2	3#4/0, #2GND	VIA DSW
P-1059	2"	HIGH SERVICE PUMP NO.2 RVSS	HIGH SERVICE PUMP NO.2	3#4/0, #2GND	VIA DSW
P-1060	2"	SWBD-RO	HIGH SERVICE PUMP NO.3 RVSS	3#4/0, #2GND	
P-1061	2"	SWBD-RO	HIGH SERVICE PUMP NO.3 RVSS	3#4/0, #2GND	
P-1062	2"	HIGH SERVICE PUMP NO.3 RVSS	HIGH SERVICE PUMP NO.3	3#4/0, #2GND	VIA DSW
P-1063	2"	HIGH SERVICE PUMP NO.3 RVSS	HIGH SERVICE PUMP NO.3	3#4/0, #2GND	VIA DSW
P-1064	2"	SWBD-RO	FUTURE HIGH SERVICE PUMP NO.4 RVSS	EMPTY W/ PULLSTRING	FUTURE
P-1065	2"	SWBD-RO	FUTURE HIGH SERVICE PUMP NO.4 RVSS	EMPTY W/ PULLSTRING	FUTURE
P-1066	2"	FUTURE HIGH SERVICE PUMP NO.4 RVSS	FUTURE HIGH SERVICE PUMP NO.4	EMPTY W/ PULLSTRING	FUTURE
P-1067	2"	FUTURE HIGH SERVICE PUMP NO.4 RVSS	FUTURE HIGH SERVICE PUMP NO.4	EMPTY W/ PULLSTRING	FUTURE
P-1068	2"	SWBD-RO	FUTURE HIGH SERVICE PUMP NO.5 RVSS	EMPTY W/ PULLSTRING	FUTURE
P-1069	2"	SWBD-RO	FUTURE HIGH SERVICE PUMP NO.5 RVSS	EMPTY W/ PULLSTRING	FUTURE
P-1070	2"	FUTURE HIGH SERVICE PUMP NO.5 RVSS	FUTURE HIGH SERVICE PUMP NO.5	EMPTY W/ PULLSTRING	FUTURE
P-1071	2"	FUTURE HIGH SERVICE PUMP NO.5 RVSS	FUTURE HIGH SERVICE PUMP NO.5	EMPTY W/ PULLSTRING	FUTURE
P-1072	3"	SWBD-RO	MCC-RO	3#350kcmil, #1GND	
P-1073	3"	SWBD-RO	MCC-RO	3#350kcmil, #1GND	
P-1074	3"	SWBD-RO	MCC-RO	EMPTY W/ PULLSTRING	SPARE
P-1075	3"	SWBD-RO	PP-CAL	4#350kcmil, #4GND	
P-1076	3"	SWBD-RO	PP-CAL	EMPTY W/ PULLSTRING	SPARE
P-1077	1"	SWBD-RO	GEN-RO COMBINATION POWER UNIT	3#8, #10GND	
P-1078	3/4"	SWBD-RO	TX-LP-RO-1	3#6, #8GND	
P-1079	1-1/2"	TX-LP-RO-1	LP-RO-1	4#1/0, #4GND	
P-1080	3/4"	SWBD-RO	TX-LP-RO-2	3#6, #8GND	
P-1081	1-1/2"	TX-LP-RO-2	LP-RO-2	4#1/0, #4GND	
P-1082	3/4"	SWBD-RO	TX-LP-ADM	3#6, #8GND	
P-1083	1-1/2"	TX-LP-ADM	LP-ADM	4#1/0, #4GND	
P-1084	1-1/2"	SWBD-RO	CLEAN-IN-PLACE TANK HEATER CP	3#1/0, #6GND	
P-1085	3/4"	SWBD-RO	SODIUM HYPOCHLORITE REACTOR	3#8, #10GND	
P-1086	1"	SWBD-RO	CO2 SYSTEM STORAGE TANK NO.1	3#8, #10GND	VIA DSW
P-1087	1"	SWBD-RO	FUTURE CO2 SYSTEM STORAGE TANK NO.2	EMPTY W/ PULLSTRING	FUTURE
P-1088	3"	SWBD-RO	PP-HVAC	4#500kcmil, #1/0GND	
P-1089	2"	SWBD-RO	PP-R0	4#4/0, #4GND	
P-1090				NOT USED	
P-1091				NOT USED	
P-1092				NOT USED	
P-1093				NOT USED	
P-1094	3/4"	PP-HVAC	VRV-OU-01 DSW	3#8, #10GND	
P-1095	3/4"	PP-HVAC	DHU-01 DSW	3#8, #10GND	
P-1096	3/4"	PP-HVAC	DHU-02 DSW	3#8, #10GND	
P-1097	3/4"	PP-HVAC	DHU-03 DSW	3#8, #10GND	
P-1098	3/4"	PP-HVAC	DHU-OU-01 DSW	3#12, #12GND	
P-1099	3/4"	PP-HVAC	DHU-OU-02 DSW	3#12, #12GND	

CONDUIT NO.	SIZE	FROM	TO	CONDUCTORS	REMARKS
P-1100	3/4"	PP-HVAC	DHU-OU-03 DSW	3#12, #12GND	
P-1101	3/4"	PP-HVAC	CRAC-01 DSW	3#8, #10GND	
P-1102	3/4"	PP-HVAC	OU-01 DSW	3#12, #12GND	
P-1103	3/4"	PP-HVAC	ERH-01 DSW	2#12, #12GND	
P-1104	3/4"	PP-HVAC	ERH-02 DSW	2#12, #12GND	
P-1105	3/4"	PP-HVAC	ERH-03 DSW	2#12, #12GND	
P-1106	3/4"	PP-HVAC	ERH-04 DSW	2#12, #12GND	
P-1107	3/4"	PP-HVAC	ERH-05 DSW	2#12, #12GND	
P-1108	3/4"	PP-HVAC	ERH-06 DSW	2#12, #12GND	
P-1109	3/4"	PP-HVAC	ERH-07 DSW	2#12, #12GND	
P-1110	3/4"	PP-HVAC	ERH-08 DSW	2#12, #12GND	
P-1111	3/4"	PP-HVAC	ERH-09 DSW	2#12, #12GND	
P-1112	3/4"	PP-HVAC	ERH-10 & ERH-11 DSW	2#12, #12GND	
P-1113	3/4"	PP-HVAC	ERH-12DSW	2#12, #12GND	
P-1114	3/4"	PP-HVAC	ERH-13, ERH-14, ERH-15, & ERH-16 DSW	2#12, #12GND	
P-1115				NOT USED	
P-1116	3/4"	PP-RO	LC-RO	4#12, #12GND	
P-1117	3/4"	PP-RO	RO TREATMENT ROOM SUMP PUMP CP	3#12, #12GND	
P-1118	1"	RO TREATMENT ROOM SUMP PUMP CP	SUMP PUMP NO.1	CABLE BY MANUF.	
P-1119	1"	RO TREATMENT ROOM SUMP PUMP CP	SUMP PUMP NO.2	CABLE BY MANUF.	
P-1120	3/4"	PP-RO	AIR COMPRESSOR	3#12, #12GND	
P-1121	3/4"	PP-RO	MOV-108 JBX	3#12, #12GND	
P-1122	3/4"	MOV-108 JBX	MOV-108	3#12, #12GND	VIA DSW
P-1123	3/4"	MOV-108 JBX	MOV-109	3#12, #12GND	VIA DSW
P-1124	3/4"	PP-RO	MOV-112	3#12, #12GND	VIA DSW
P-1125	3/4"	PP-RO	MOV-201-1 JBX	3#12, #12GND	
P-1126	3/4"	MOV-201-1 JBX	MOV-201-1	3#12, #12GND	VIA DSW
P-1127	3/4"	MOV-201-1 JBX	MOV-202-1 JBX	3#12, #12GND	
P-1128	3/4"	MOV-202-1 JBX	MOV-202-1	3#12, #12GND	VIA DSW
P-1129	3/4"	MOV-202-1 JBX	MOV-207-1 JBX	3#12, #12GND	VIA DSW
P-1130	3/4"	MOV-207-1 JBX	MOV-207-1	3#12, #12GND	VIA DSW
P-1131	3/4"	MOV-207-1 JBX	MOV-218-1	3#12, #12GND	VIA DSW
P-1132	3/4"	PP-RO	MOV-201-2 JBX	3#12, #12GND	
P-1133	3/4"	MOV-201-2 JBX	MOV-201-2	3#12, #12GND	VIA DSW
P-1134	3/4"	MOV-201-2 JBX	MOV-202-2 JBX	3#12, #12GND	
P-1135	3/4"	MOV-202-2 JBX	MOV-202-2	3#12, #12GND	VIA DSW
P-1136	3/4"	MOV-202-2 JBX	MOV-207-2 JBX	3#12, #12GND	VIA DSW
P-1137	3/4"	MOV-207-2 JBX	MOV-207-2	3#12, #12GND	VIA DSW
P-1138	3/4"	MOV-207-2 JBX	MOV-218-2	3#12, #12GND	VIA DSW
P-1139	3/4"	PP-RO	FUTURE MOV-201-3 DSW	EMPTY W/ PULLSTRING	FUTURE
P-1140	3/4"	FUTURE MOV-201-3 DSW	FUTURE MOV-215-3 DSW	EMPTY W/ PULLSTRING	FUTURE
P-1141	3/4"	PP-RO	FUTURE MOV-201-4 DSW	EMPTY W/ PULLSTRING	FUTURE
P-1142	3/4"	FUTURE MOV-201-4 DSW	FUTURE MOV-215-4 DSW	EMPTY W/ PULLSTRING	FUTURE
P-1143	3/4"	PP-RO	WATER HEATER	3#10, #10GND	VIA DSW
P-1144	3/4"	PP-RO	ROLL-UP DOOR - RO TREATMENT ROOM	3#12, #12GND	VIA DSW
P-1145	3/4"	PP-RO	ROLL-UP DOOR - HYPOCHLORITE ROOM	3#12, #12GND	VIA DSW
P-1146	3/4"	PP-RO	ROLL-UP DOOR - CAUSTIC ROOM	3#12, #12GND	VIA DSW
P-1147	3/4"	PP-RO	ROLL-UP DOOR - CORROSION ROOM	3#12, #12GND	VIA DSW
P-1148	3/4"	PP-RO	ROLLUP-DOOR - SHOP/STORAGE ROOM	3#12, #12GND	VIA DSW
P-1149				NOT USED	
P-1150	3/4"	MCC-RO	PERMEATE FLUSH SYSTEM PUMP NO.1	3#12, #12GND	VIA DSW
P-1151	3/4"	MCC-RO	PERMEATE FLUSH SYSTEM PUMP NO.2	3#12, #12GND	VIA DSW
P-1152	3/4"	MCC-RO	CLEAN-IN-PLACE PUMP	3#1/0, 2#12, #6GND	VIA DSW
P-1153	3/4"	MCC-RO	RAW WATER SAMPLE PUMP	3#12, #12GND	VIA DSW
P-1154	3/4"	MCC-RO	SPENT CLEANING SOLUTION TANK MIXER	3#12, #12GND	VIA DSW
P-1155	1"	MCC-RO	BACKWASH HOLDING BASIN PUMP NO.1	3#12, #12GND	VIA DSW
P-1156	1"	MCC-RO	BACKWASH HOLDING BASIN PUMP NO.2	3#12, #12GND	VIA DSW
P-1157	1"	MCC-RO	BACKWASH HOLDING BASIN MIXER DSW	3#12, #12GND	
P-1158	3/4"	BACKWASH HOLDING BASIN MIXER DSW	BACKWASH HOLDING BASIN MIXER	CABLE BY MANUF.	
P-1159	3/4"	LP-RO-1		2#12, #12GND	
P-1160	3/4"	LP-RO-1		2#12, #12GND	
P-1161	3/4"	LP-RO-1		2#12, #12GND	
P-1162	3/4"	LP-RO-1		EMPTY W/ PULLSTRING	
P-1163	3/4"	LP-RO-1		EMPTY W/ PULLSTRING	
P-1164				NOT USED	
P-1165	3/4"	LP-RO-1	RAW WATER PANEL	2#12, #12GND	FIT-101,PIT-102,AIT-104/5/6,TIT-107,DPIT-110
P-1166	3/4"	LP-RO-1	FIT-120	2#12, #12GND	
P-1167	3/4"	LP-RO-1	COMBINED CONCENTRATE PANEL	2#12, #12GND	AIT-118
P-1168	3/4"	LP-RO-1	COMBINED PERMEATE PANEL	2#12, #12GND	AIT-114
P-1169	3/4"	LP-RO-1	FIT-117	2#12, #12GND	
P-1170	3/4"	LP-RO-1	LIT-111	2#12, #12GND	
P-1171	3/4"	LP-RO-1	CLEANING & SPENT SOLUTION PANEL	2#12, #12GND	AIT-124
P-1172	3/4"	LP-RO-1	FIT-125	2#12, #12GND	
P-1173	3/4"	LP-RO-1	DPIT-127	2#12, #12GND	
P-1174	3/4"	LP-RO-1	LIT-103 & FIT-135	2#12, #12GND	
P-1175	3/4"	LP-RO-1	SCALE INHIBITOR SKID	2#12, #12GND	
P-1176	3/4"	LP-RO-1	LIT-131 & FIT-134	2#12, #12GND	
P-1177	3/4"	LP-RO-1	CAUSTIC SKID	2#12, #12GND	
P-1178	3/4"	LP-RO-1	LIT-129 & FIT-136	2#12, #12GND	
P-1179	3/4"	LP-RO-1	CORROSION INHIBITOR SKID	2#12, #12GND	
P-1180	3/4"	LP-RO-1	AIR DRYER	2#12, #12GND	
P-1181	3/4"	LP-RO-1	AIR CONTROL VALVE	2#12, #12GND	
P-1182	3/4"	LP-RO-1	CO2 SYSTEM PRESSURE SOLUTION CP	2#12, #12GND	
P-1183	3/4"	LP-RO-1	CO2 SYSTEM ALARM CP	2#12, #12GND	
P-1184	3/4"	LP-RO-1	CALCITE EFFLUENT PANEL	2#12, #12GND	AIT-162
P-1185	1"	LP-RO-1	LIT-161	2#12, #12GND	
P-1186	1"	LP-RO-1	FIT-167 & PIT180	2#12, #12GND	
P-1187	3/4"	LP-RO-1	FINISHED WATER EFFLUENT PANEL	2#12, #12GND	AIT-168
P-1188	1"	LP-RO-1	LIT-170	2#12, #12GND	
P-1189	3/4"	LP-RO-1	CALCITE INFLUENT PANEL	2#12, #12GND	AIT-179
P-1190	1"	LP-RO-1	FIT-187	2#12, #12GND	
P-1191	3/4"	LP-RO-1	PLC-2-1	2#12, #12GND	
P-1192	3/4"	LP-RO-1	RO TRAIN NO.1 INSTRUMENTS	2#12, #12GND	
P-1193	3/4"	LP-RO-1	PLC-2-2	2#12, #12GND	
P-1194	3/4"	LP-RO-1	RO TRAIN NO.2 INSTRUMENTS	2#12, #12GND	
P-1195	3/4"	LP-RO-1	FUTURE PLC-2-3	EMPTY W/ PULLSTRING	FUTURE
P-1196	3/4"	LP-RO-1	FUTURE RO TRAIN NO.3 INSTRUMENTS	EMPTY W/ PULLSTRING	FUTURE
P-1197	3/4"	LP-RO-1	FUTURE PLC-2-4	EMPTY W/ PULLSTRING	FUTURE
P-1198	3/4"	LP-RO-1	FUTURE RO TRAIN NO.4 INSTRUMENTS	EMPTY W/ PULLSTRING	FUTURE
P-1199	3/4"	LP-RO-1	PLC-1	2#12, #12GND	

REVISIONS

THE WOOTEN COMPANY
120 North Boylan Avenue Raleigh, NC 27603-1423
919.828.0531 Fax 919.834.3589
License Number: F-0113

BRUNSWICK REGIONAL WATER AND SEWER H2GO
BRUNSWICK COUNTY NORTH CAROLINA
CONTRACT No. 4
REVERSE OSMOSIS WATER TREATMENT PLANT

ELECTRICAL-RO TREATMENT BUILDING
CONDUIT AND WIRE SCHEDULES

NORTH CAROLINA PROFESSIONAL ENGINEER 16765 DocuSigned by: ROBERT E. EGAN

DESIGNED BY: JJS/REE
DRAWN BY: PMD/EML
CHECKED BY: REE
PROJECT NO.: 3081-AB
DATE: JUNE 7, 2020
SCALE: AS NOTED

SHEET 125 OF 181

E114

pdf2013.pltcfg
10.0000 ' / in.
began
6/2/2020 1:28:53 PM
T:\Projects\Brunswick_Regional_W&S_H2GO-3081\AB-Water_Supply&Treatment_Plant\Sheets\WTP\Electrical\RO Plant Elect Sheets.dgn

DocuSign Envelope ID: 90E8EB5B-D04D-407C-8823-7B551B888A3A

E115- Conduit and Wire Schedlule

CONDUIT NO.	SIZE	FROM	TO	CONDUCTORS	REMARKS
P-1200	3/4"	LP-RO-1	PLC-3	3#12, #12GND	
P-1201	1"	LP-RO-1	GATE CONTROLLER	3#10, #12GND	
P-1202				NOT USED	
P-1203				NOT USED	
P-1204				NOT USED	
P-1205				NOT USED	
P-1206				NOT USED	
P-1207				NOT USED	
P-1208				NOT USED	
P-1209				NOT USED	
P-1210	1"	LP-RO-2	CO2 FACILITY LIGHTING & RECEPT	2#10, #10GND	
P-1211	1"	LP-RO-2	RAW WATER VAULT	2#10, #10GND	LIGHTS, RECEPT, SUMP
P-1212	1"	LP-RO-2	TREATED WATER VAULT	2#10, #10GND	LIGHTS, RECEPT, SUMP
P-1213	1"	LP-RO-2	CHEMICAL FEED VAULT & SAMPLE MH	2#10, #10GND	LIGHTS, RECEPT
P-1214	1"	LP-RO-2	FINISHED WATER METER VAUT	2#10, #10GND	LIGHTS, RECEPT, SUMP
P-1215	3/4"	LP-RO-2	LIT-324 & LIT-325	2#12, #12GND	
P-1216	3/4"	LP-RO-2	HYPOCHLORITE METERING PUMP NO.1 VFD	2#12, #12GND	
P-1217	3/4"	LP-RO-2	HYPOCHLORITE METERING PUMP NO.2 VFD	2#12, #12GND	
P-1218	3/4"	LP-RO-2	HYPOCHLORITE METERING PUMP NO.3 VFD	2#12, #12GND	
P-1219	1"	LP-RO-2	BACKFLOW PREVENTER VAULT	2#10, #10GND	LIGHTS, RECEPT
P-1220	1"	LP-RO-2	BYPASS VAULT	2#10, #10GND	LIGHTS, RECEPT
P-1221	3/4"	LP-RO-2	FSH-181 & FSH-182	2#12, #12GND	
P-1222	3/4"	LP-RO-2	FSH-183, FSH-184, FSH-185, & FSH-186	2#12, #12GND	
P-1223				NOT USED	
P-1224	3/4"	LP-RO-2	EF-01 STARTER	2#12, #12GND	
P-1225	3/4"	EF-01 STARTER	EF-01	2#12, #12GND	
P-1226	3/4"	LP-RO-2	EF-02 STARTER	2#12, #12GND	
P-1227	3/4"	EF-02 STARTER	EF-02	2#12, #12GND	
P-1228	3/4"	LP-RO-2	EF-03 STARTER	2#12, #12GND	
P-1229	3/4"	EF-03 STARTER	EF-03	2#12, #12GND	
P-1230	3/4"	LP-RO-2	EF-04 STARTER	2#12, #12GND	
P-1231	3/4"	EF-04 STARTER	EF-04	2#12, #12GND	
P-1232	3/4"	LP-RO-ADM	EF-05 STARTER	2#12, #12GND	
P-1233	3/4"	EF-05 STARTER	EF-05	2#12, #12GND	
P-1234	3/4"	LP-RO-2	EF-06 DISCONNECT	2#12, #12GND	
P-1235	3/4"	EF-06 DISCONNECT	EF-06	2#12, #12GND	
P-1236				NOT USED	
P-1237				NOT USED	
P-1238				NOT USED	
P-1239				NOT USED	
P-1240	3/4"	LP-ADM	FCU-01	2#12, #12GND	
P-1241	3/4"	LP-ADM	FCU-02	2#12, #12GND	
P-1242	3/4"	LP-ADM	FCU-03	2#12, #12GND	
P-1243	3/4"	LP-ADM	FCU-04	2#12, #12GND	
P-1244	3/4"	LP-ADM	FCU-05	2#12, #12GND	
P-1245	3/4"	LP-ADM	BS-01	2#12, #12GND	
P-1246	3/4"	LP-ADM	FSH-180	2#12, #12GND	
P-1247				NOT USED	
P-1248				NOT USED	
P-1249				NOT USED	
P-1250	1"	LC-RO	SITE LIGHTING	2#12, #12GND	PHASE A
P-1251	1"	LC-RO	SITE LIGHTING	2#12, #12GND	PHASE B
P-1252	1"	LC-RO	SITE LIGHTING	2#12, #12GND	PHASE C
P-1253				NOT USED	
P-1254				NOT USED	
P-1255	2"	SWBD-RO	EMH-1	EMPTY W/ PULLSTRING	SPARE
P-1256	2"	SWBD-RO	EMH-1	EMPTY W/ PULLSTRING	SPARE
P-1257	2"	SWBD-RO	EMH-1	EMPTY W/ PULLSTRING	SPARE
P-1258	2"	SWBD-RO	EMH-1	EMPTY W/ PULLSTRING	SPARE
P-1259	2"	EMH-1	EMH-3	EMPTY W/ PULLSTRING	SPARE
P-1260	2"	EMH-1	EMH-3	EMPTY W/ PULLSTRING	SPARE
P-1261	2"	EMH-1	EMH-3	EMPTY W/ PULLSTRING	SPARE
P-1262	2"	EMH-1	EMH-3	EMPTY W/ PULLSTRING	SPARE
P-1263				NOT USED	
P-1264				NOT USED	
P-1265				NOT USED	
P-1266				NOT USED	
P-1267	3/4"	PP-RO	EMH-1	EMPTY W/ PULLSTRING	SPARE
P-1268	3/4"	PP-RO	EMH-1	EMPTY W/ PULLSTRING	SPARE
P-1269	3/4"	EMH-1	EMH-3	EMPTY W/ PULLSTRING	SPARE
P-1270	3/4"	EMH-1	EMH-3	EMPTY W/ PULLSTRING	SPARE
P-1271				NOT USED	
P-1272				NOT USED	
P-1273				NOT USED	
P-1274				NOT USED	
P-1275				NOT USED	
P-1276				NOT USED	
P-1277				NOT USED	
P-1278				NOT USED	
P-1279				NOT USED	
P-1280				NOT USED	
P-1281				NOT USED	
P-1282				NOT USED	
P-1283				NOT USED	
P-1284				NOT USED	
P-1285				NOT USED	
P-1286				NOT USED	
P-1287				NOT USED	
P-1288				NOT USED	
P-1289				NOT USED	
P-1290				NOT USED	
P-1291				NOT USED	
P-1292				NOT USED	
P-1293				NOT USED	
P-1294				NOT USED	
P-1295				NOT USED	
P-1296				NOT USED	
P-1297				NOT USED	
P-1298				NOT USED	
P-1299				NOT USED	

REVISIONS

THE WOOTEN COMPANY
120 North Boylan Avenue Raleigh, NC 27603-1423
919.828.0531 Fax 919.834.3589
License Number: F-0113

BRUNSWICK REGIONAL WATER AND SEWER H2GO
BRUNSWICK COUNTY NORTH CAROLINA
CONTRACT No. 4
REVERSE OSMOSIS WATER TREATMENT PLANT

ELECTRICAL-RO TREATMENT BUILDING
CONDUIT AND WIRE SCHEDULES

NORTH CAROLINA PROFESSIONAL ENGINEER SEAL 16765 DocuSigned by: ROBERT E. EASLEY ENGINEERING

DESIGNED BY: JJS/REE
DRAWN BY: PMD/EML
CHECKED BY: REE
PROJECT NO.: 3081-AB
DATE: JUNE 7, 2020
SCALE: AS NOTED

SHEET 126 OF 181

E115

pdf2013.pltcfg
10.0000 " / in.
began
6/2/2020 1:29:20 PM
T:\Projects\Brunswick_Regional_W&S_H2GO-3081\AB-Water_Supply&Treatment_Plant\Sheets\WTP\Electrical\RO Plant Elect Sheets.dgn

DocuSign Envelope ID: 15CE123C-6E50-4D83-BC50-B8D25C91C3E7

E116- Conduit and Wire Schedlule

CONDUIT NO.	SIZE	FROM	TO	CONDUCTORS	REMARKS
C-1000	2"	PLC-1	ANTENNA	BY SCADA CONTRACT	
C-1001	2"	PLC-1	PLC-4	12 STRAND MM FIBER ARMOUR JACKET	
C-1002	2"	PLC-1	PLC-4	EMPTY W/ PULLSTRING	SPARE
C-1003	3/4"	PLC-1	ATS-RO	10#14, #14GND	
C-1004	1"	ATS-RO	GEN-RO	10#14, #14GND	
C-1005	1"	PLC-1	GEN-RO	10#14, #14GND	
C-1006	1"	PLC-1	GEN-RO	EMPTY W/ PULLSTRING	SPARE
C-1007	1"	PLC-1	H.S. PUMP NO.1 PUMP CONTROL VALE PANEL	26#14, #14GND	
C-1008	1"	PLC-1	H.S. PUMP NO.2 PUMP CONTROL VALE PANEL	26#14, #14GND	
C-1009	1"	PLC-1	H.S. PUMP NO.3 PUMP CONTROL VALE PANEL	26#14, #14GND	
C-1010	1"	PLC-1	FUTURE NO.4 PUMP CONTROL VALE PANEL	EMPTY W/ PULLSTRING	FUTURE
C-1011	1"	PLC-1	FUTURE NO.5 PUMP CONTROL VALE PANEL	EMPTY W/ PULLSTRING	FUTURE
C-1012	2"	PLC-1	MCC-RO	100#14, #14GND	
C-1013	2"	PLC-1	MCC-RO	EMPTY W/ PULLSTRING	SPARE
C-1014	3/4"	PLC-1	MOV-108	10#14, #14GND	
C-1015	3/4"	PLC-1	MOV-109	10#14, #14GND	
C-1016	3/4"	PLC-1	MOV-112	10#14, #14GND	
C-1017	3/4"	PLC-1	SCALE INHIBITOR SKID	20#14, #14GND	
C-1018	3/4"	PLC-1	CAUSTIC SKID	20#14, #14GND	
C-1019	3/4"	PLC-1	CORROSION INHIBITOR SKID	20#14, #14GND	
C-1020	1"	PLC-1	CO2 SYSTEM STORAGE TANK NO.1 CP	8#14, #14GND	
C-1021	1"	PLC-1	FUTURE CO2 SYSTEM STORAGE TANK NO.2 CP	EMPTY W/ PULLSTRING	FUTURE
C-1022	3/4"	PLC-1	CO2 SYSTEM PRESSURE SOLUTION FEED CP	14#14, #14GND	
C-1023	3/4"	PLC-1	CO2 SYSTEM ALARM CP	4#14, #14GND	
C-1024	3/4"	CO2 SYSTEM ALARM CP	AIT-160	6#14, #14GND	
C-1025	3/4"	PLC-1	FSH-180	4#14, #14GND	
C-1026	3/4"	PLC-1	FSH-181	4#14, #14GND	
C-1027	3/4"	PLC-1	FSH-182	4#14, #14GND	
C-1028	3/4"	PLC-1	FSH-183	4#14, #14GND	
C-1029	3/4"	PLC-1	FSH-184	4#14, #14GND	
C-1030	3/4"	PLC-1	FSH-185	4#14, #14GND	
C-1031	3/4"	PLC-1	FSH-186	4#14, #14GND	
C-1032	1"	PLC-1	FUTURE AMMONIA SYSTEM	EMPTY W/ PULLSTRING	FUTURE - SHOP/STORAGE AREA
C-1033	3/4"	PLC-1	RO TREATMENT ROOM SUMP CP	4#14, #14GND	LSH-192
C-1034	1"	PLC-1	FLUORIDE SKID	20#14, #14GND	
C-1035	1"	PLC-1	FSH-188	4#14, #14GND	
C-1036	2"	PLC-1	EMH-1	EMPTY W/ PULLSTRING	SPARE
C-1037	2"	PLC-1	EMH-1	EMPTY W/ PULLSTRING	SPARE
C-1038	3/4"	PLC-1	YA-503,504	4#14, #14GND	
C-1039	3/4"	PLC-2-1	MEMBRANE FEED PUMP NO.1 VFD	14#14, #14GND	
C-1040		PLC-2-1	MOV-201-1		BY ROEM
C-1041		PLC-2-1	MOV-202-1		BY ROEM
C-1042		PLC-2-1	MOV-207-1		BY ROEM
C-1043		PLC-2-1	MOV-218-1		BY ROEM
C-1044				NOT USED	
C-1045	3/4"	PLC-2-2	MEMBRANE FEED PUMP NO.2 VFD	14#14, #14GND	
C-1046		PLC-2-2	MOV-201-2		BY ROEM
C-1047		PLC-2-2	MOV-202-2		BY ROEM
C-1048		PLC-2-2	MOV-207-2		BY ROEM
C-1049		PLC-2-2	MOV-218-2		BY ROEM
C-1050				NOT USED	
C-1051	3/4"	FUTURE PLC-2-3	FUTURE MEMBRANE FEED PUMP NO.3 VFD	EMPTY W/ PULLSTRING	FUTURE
C-1052				NOT USED	
C-1053	3/4"	FUTURE PLC-2-4	FUTURE MEMBRANE FEED PUMP NO.4 VFD	EMPTY W/ PULLSTRING	FUTURE
C-1054				NOT USED	
C-1055	3/4"	PLC-3	HYDROGEN DETECTOR	4#14, #14GND	
C-1056	3/4"	PLC-3	LSH-302	4#14, #14GND	
C-1057	3/4"	PLC-3	PSH-323	4#14, #14GND	
C-1058	3/4"	PLC-3	HYDROGEN DILUTION BLOWER NO.1	2#12, #12GND	
C-1059	3/4"	PLC-3	HYDROGEN DILUTION BLOWER NO.2	2#12, #12GND	
C-1060	3/4"	PLC-3	HYPOCHLORITE METERING PUMP NO.1	8#14, #14GND	
C-1061	3/4"	PLC-3	HYPOCHLORITE METERING PUMP NO.2	8#14, #14GND	
C-1062	3/4"	PLC-3	HYPOCHLORITE METERING PUMP NO.3	8#14, #14GND	
C-1063				NOT USED	
C-1064	1"	MEMBRANE FEED PUMP NO.1 VFD	CPB-ROFP-1	2#12, 16#14, #12GND	
C-1065	3/4"	CPB-ROFP-1	MEMBRANE FEED PUMP NO.1	2#12, 2#14, #12GND	
C-1066	3/4"	CPB-ROFP-1	HS-204-1	6#14, #14GND	
C-1067	3/4"	CPB-ROFP-1	PSL-203-1	4#14, #14GND	
C-1068	3/4"	CPB-ROFP-1	PSH-206-1	4#14, #14GND	
C-1069	1"	MEMBRANE FEED PUMP NO.2 VFD	CPB-ROFP-2	2#12, 16#14, #12GND	
C-1070	3/4"	CPB-ROFP-2	MEMBRANE FEED PUMP NO.2	2#12, 2#14, #12GND	
C-1071	3/4"	CPB-ROFP-2	HS-204-2	6#14, #14GND	
C-1072	3/4"	CPB-ROFP-2	PSL-203-2	4#14, #14GND	
C-1073	3/4"	CPB-ROFP-2	PSH-206-2	4#14, #14GND	
C-1074	1"	FUTURE MEMBRANE FEED PUMP NO.3 VFD	FUTURE CPB-ROFP-3	EMPTY W/ PULLSTRING	FUTURE
C-1075	1"	FUTURE MEMBRANE FEED PUMP NO.4 VFD	FUTURE CPB-ROFP-4	EMPTY W/ PULLSTRING	FUTURE
C-1076	1"	HIGH SERVICE PUMP NO.1 RVSS	PCVP-HSP-1	2#12, 10#14, #12GND	
C-1077	1"	PCVP-HSP-1	LCS-164-1	2#12, 16#14, #12GND	
C-1078	3/4"	LCS-164-1	HIGH SERVICE PUMP NO.1	2#12, 2#14, #12GND	
C-1079	3/4"	LCS-164-1	CV-164-1	12#14, #14GND	
C-1080	1"	HIGH SERVICE PUMP NO.2 RVSS	PCVP-HSP-2	2#12, 10#14, #12GND	
C-1081	1"	PCVP-HSP-2	LCS-164-2	2#12, 16#14, #12GND	
C-1082	3/4"	LCS-164-2	HIGH SERVICE PUMP NO.2	2#12, 2#14, #12GND	
C-1083	3/4"	LCS-164-2	CV-164-2	12#14, #14GND	
C-1084	1"	HIGH SERVICE PUMP NO.3 RVSS	PCVP-HSP-3	2#12, 10#14, #12GND	
C-1085	1"	PCVP-HSP-3	LCS-164-3	2#12, 16#14, #12GND	
C-1086	3/4"	LCS-164-3	HIGH SERVICE PUMP NO.3	2#12, 2#14, #12GND	
C-1087	3/4"	LCS-164-3	CV-164-3	12#14, #14GND	
C-1088	1"	FUTURE HIGH SERVICE PUMP NO.4 RVSS	FUTURE CPB-HSP-4	EMPTY W/ PULLSTRING	FUTURE
C-1089	1"	FUTURE HIGH SERVICE PUMP NO.5 RVSS	FUTURE CPB-HSP-5	EMPTY W/ PULLSTRING	FUTURE
C-1090	3/4"	ACCESS CONTROL PANEL RM 112	GATE OPERATOR	ACCESS CONTROL CABLE	
C-1091	1"	MCC-RO	CPB-FLP-1	2#12, 8#14, #12GND	
C-1092	3/4"	CPB-FLP-1	PERMEATE FLUSH SYSTEM PUMP NO.1	2#12, 2#14, #12GND	
C-1093	3/4"	CPB-FLP-1	HS-FLP-1	6#14, #14GND	
C-1094	1"	MCC-RO	CPB-FLP-2	2#12, 8#14, #12GND	
C-1095	3/4"	CPB-FLP-2	PERMEATE FLUSH SYSTEM PUMP NO.2	2#12, 2#14, #12GND	
C-1096	3/4"	CPB-FLP-2	HS-FLP-2	6#14, #14GND	
C-1097	1"	MCC-RO	CPB-CP-1	2#12, 16#14, #12GND	
C-1098	3/4"	CPB-CP-1	CLEAN-IN-PLACE PUMP	2#12, 2#14, #12GND	
C-1099	3/4"	CPB-CP-1	HS-CP-1	10#14, #14GND	

CONDUIT NO.	SIZE	FROM	TO	CONDUCTORS	REMARKS
C-1100	3/4"	CPB-CP-1	PSH-122	4#14, #14GND	
C-1101	1"	MCC-RO	CPB-RWSP-1	2#12, 8#14, #12GND	
C-1102	3/4"	CPB-RWSP-1	RAW WATER SAMPLE PUMP	2#12, 2#14, #12GND	
C-1103	3/4"	CPB-RWSP-1	HS-RWSP-1	6#14, #14GND	
C-1104	1"	MCC-RO	CPB-MIX-1	2#12, 8#14, #12GND	
C-1105	3/4"	CPB-MIX-1	SPENT CLEANING SOLUTION TANK MIXER	2#12, 2#14, #12GND	
C-1106	3/4"	CPB-MIX-1	HS-MIX-1	6#14, #14GND	
C-1107	1"	MCC-RO	CPB-WP-1	2#12, 12#14, #12GND	
C-1108	3/4"	CPB-WP-1	BACKWASH HOLDING BASIN PUMP NO.1	2#12, 2#14, #12GND	
C-1109	3/4"	CPB-WP-1	HS-WP-1	6#14, #14GND	
C-1110	3/4"	CPB-WP-1	LS-175	4#14, #14GND	
C-1111	1"	MCC-RO	CPB-WP-2	2#12, 12#14, #12GND	
C-1112	3/4"	CPB-WP-2	BACKWASH HOLDING BASIN PUMP NO.2	2#12, 2#14, #12GND	
C-1113	3/4"	CPB-WP-2	HS-WP-2	6#14, #14GND	
C-1114	3/4"	CPB-WP-2	LS-176	4#14, #14GND	
C-1115	1"	MCC-RO	CPB-MIX-2	2#12, 8#14, #12GND	
C-1116	3/4"	CPB-MIX-2	BACKWASH HOLDING BASIN MIXER	CABLE BY MANUF.	INSTALL TERMINAL BLOCKS IN CPB
C-1117	3/4"	CPB-MIX-2	HS-MIX-2	6#14, #14GND	
C-1118	2"	NETWORK RM 112	SERVICE HAND HOLE	EMPTY W/ PULLSTRING	
C-1119	2"	NETWORK RM 112	SERVICE HAND HOLE	EMPTY W/ PULLSTRING	
C-1120	3/4"	EF-01 STARTER	EF-01 TSTAT	4#14, #14GND	
C-1121	3/4"	EF-02 STARTER	EF-02 TSTAT	4#14, #14GND	
C-1122	3/4"	EF-03 STARTER	EF-03 TSTAT	4#14, #14GND	
C-1123	3/4"	EF-04 STARTER	EF-04 TSTAT	4#14, #14GND	
C-1124	3/4"	PLC-1	SOLENOIDS YC-195 & YC-196	4#14, #14GND	CALCITE EFFLUENT PANEL
C-1125	3/4"	PLC-1	SOLENOIDS YC-197 & YC-198	4#14, #14GND	FINISHED WATER EFFLUENT PANEL
C-1126	3/4"	PLC-1	SOLENOIDS YC-193 & YC-194	4#14, #14GND	CALCITE INFLUENT PANEL
C-1127	3/4"	LC-RO TIMECLOCK	PHOTOCELL	3#14, #14GND	
C-1128	1"	RO TREATMENT ROOM SUMP PUMP CP	SUMP PUMP LEVEL SWITCHES	CABLES BY MANUF.	
C-1129	3/4"	EF-05 STARTER	FCU-5	3#14, #14GND	
C-1130	2"	EMH-1	EMH-3	EMPTY W/ PULLSTRING	SPARE
C-1131	2"	EMH-1	EMH-3	EMPTY W/ PULLSTRING	SPARE
C-1132				NOT USED	
C-1133				NOT USED	
C-1134			CALCITE EFFLUENT PANEL	NOT USED	
C-1135			FINISHED WATER EFFLUENT PANEL	NOT USED	
C-1136			CALCITE INFLUENT PANEL	NOT USED	
C-1137				NOT USED	
C-1138				NOT USED	
C-1139				NOT USED	
C-1140				NOT USED	
C-1141				NOT USED	
C-1142				NOT USED	
C-1143				NOT USED	
C-1144				NOT USED	
C-1145				NOT USED	
C-1146				NOT USED	
C-1147				NOT USED	
C-1148				NOT USED	
C-1149				NOT USED	
C-1150				NOT USED	
C-1151				NOT USED	
C-1152				NOT USED	
C-1153				NOT USED	
C-1154				NOT USED	
C-1155				NOT USED	
C-1156				NOT USED	
C-1157				NOT USED	
C-1158				NOT USED	
C-1159				NOT USED	
C-1160				NOT USED	
C-1161				NOT USED	
C-1162				NOT USED	
C-1163				NOT USED	
C-1164				NOT USED	
C-1165				NOT USED	
C-1166				NOT USED	
C-1167				NOT USED	
C-1168				NOT USED	
C-1169				NOT USED	
C-1170				NOT USED	
C-1171				NOT USED	
C-1172				NOT USED	
C-1173				NOT USED	
C-1174				NOT USED	
C-1175				NOT USED	
C-1176				NOT USED	
C-1177				NOT USED	
C-1178				NOT USED	
C-1179				NOT USED	
C-1180				NOT USED	
C-1181				NOT USED	
C-1182				NOT USED	
C-1183				NOT USED	
C-1184				NOT USED	
C-1185				NOT USED	
C-1186				NOT USED	
C-1187				NOT USED	
C-1188				NOT USED	
C-1189				NOT USED	
C-1190				NOT USED	
C-1191				NOT USED	
C-1192				NOT USED	
C-1193				NOT USED	
C-1194				NOT USED	
C-1195				NOT USED	
C-1196				NOT USED	
C-1197				NOT USED	
C-1198				NOT USED	
C-1199				NOT USED	

REVISIONS

THE WOOTEN COMPANY
120 North Boylan Avenue Raleigh, NC 27603-1423
919.828.0531 Fax 919.834.3589
License Number: F-0113

BRUNSWICK REGIONAL WATER AND SEWER H2GO
BRUNSWICK COUNTY NORTH CAROLINA
CONTRACT No. 4
REVERSE OSMOSIS WATER TREATMENT PLANT

ELECTRICAL-RO TREATMENT BUILDING
CONDUIT AND WIRE SCHEDULES

NORTH CAROLINA PROFESSIONAL ENGINEER SEAL 16765 DocuSigned by: ROBERT E. EVANS 6/3/2020 5:01:48 PM EDT

DESIGNED BY: JJS/REE
DRAWN BY: PMD/EML
CHECKED BY: REE
PROJECT NO.: 3081-AB
DATE: JUNE 7, 2020
SCALE: AS NOTED

SHEET 127 OF 181

E116

pdf2013.pltcfg
10.0000 ", " in.
began
6/3/2020 9:49:40 AM
T:\Projects\Brunswick_Regional_W&S_H2GO-3081\AB-Water_Supply&Treatment_Plant\Sheets\WTP\Electrical\RO Plant Elect Sheets.dgn

DocuSign Envelope ID: 90E8EB5B-D04D-407C-8823-7B551B888A3A

E117- Conduit and Wire Schedlule

CONDUIT NO.	SIZE	FROM	TO	CONDUCTORS	REMARKS
I-1000	2"	PLC-1	PLC-2-1	2-(CAT-6), #14GND	
I-1001	2"	PLC-1	PLC-2-1	EMPTY W/ PULLSTRING	SPARE
I-1002	2"	PLC-1	PLC-2-2	2-(CAT-6), #14GND	
I-1003	2"	PLC-1	PLC-2-2	EMPTY W/ PULLSTRING	SPARE
I-1004	2"	PLC-1	FUTURE PLC-2-3	EMPTY W/ PULLSTRING	FUTURE
I-1005	2"	PLC-1	FUTURE PLC-2-3	EMPTY W/ PULLSTRING	SPARE
I-1006	2"	PLC-1	FUTURE PLC-2-4	EMPTY W/ PULLSTRING	FUTURE
I-1007	2"	PLC-1	FUTURE PLC-2-4	EMPTY W/ PULLSTRING	SPARE
I-1008	2"	PLC-1	PLC-3	2-(CAT-6), #14GND	
I-1009	2"	PLC-1	PLC-3	EMPTY W/ PULLSTRING	SPARE
I-1010	2"	PLC-2-1	PLC-2-2	2-(CAT-6), #14GND	
I-1011	2"	PLC-2-1	PLC-2-2	EMPTY W/ PULLSTRING	SPARE
I-1012	2"	PLC-2-2	FUTURE PLC-2-3	EMPTY W/ PULLSTRING	FUTURE
I-1013	2"	PLC-2-2	FUTURE PLC-2-3	EMPTY W/ PULLSTRING	SPARE
I-1014	2"	FUTURE PLC-2-3	FUTURE PLC-2-4	EMPTY W/ PULLSTRING	FUTURE
I-1015	2"	FUTURE PLC-2-3	FUTURE PLC-2-4	EMPTY W/ PULLSTRING	SPARE
I-1016	3/4"	PLC-1	SWBD-RO POWER MONITOR	2-(CAT-6), #14GND	
I-1017	2"	PLC-1	RAW WATER PANEL	7-(2/C#16TSH), #14GND	FIT-101,PIT-102,AIT-104/5/6,TIT-107,DPIT-110
I-1018	1"	FIT-101	FE-101	CABLE BY MANUF.	
I-1019	3/4"	PLC-1	FIT-120	2/C#16TSH, #14GND	
I-1020	3/4"	FIT-120	FE-120	CABLE BY MANUF.	
I-1021	3/4"	PLC-1	COMBINED CONCENTRATE PANEL	2-(2/C#16TSH), #14GND	AIT-118
I-1022	3/4"	PLC-1	COMBINED PERMEATE PANEL	2-(2/C#16TSH), #14GND	AIT-114
I-1023	3/4"	PLC-1	PIT-116	2/C#16TSH, #14GND	
I-1024	3/4"	PLC-1	FIT-117	2/C#16TSH, #14GND	
I-1025	3/4"	FIT-117	FE-117	CABLE BY MANUF.	
I-1026	3/4"	PLC-1	LIT-111	2/C#16TSH, #14GND	
I-1027	3/4"	LIT-111	LE-111	CABLE BY MANUF.	
I-1028	3/4"	PLC-1	SPENT AND CLEANING SOLUTION PANEL	2-(2/C#16TSH), #14GND	AIT-124
I-1029	3/4"	PLC-1	FIT-125	2/C#16TSH, #14GND	
I-1030	3/4"	FIT-125	FE-125	CABLE BY MANUF.	
I-1031				NOT USED	
I-1032	3/4"	PLC-1	DPIT-127	2/C#16TSH, #14GND	
I-1033	3/4"	PLC-1	LIT-103	2/C#16TSH, #14GND	
I-1034	3/4"	LIT-103	LE-103	CABLE BY MANUF.	
I-1035	1-1/2"	PLC-1	SCALE INHIBITOR SKID	4-(2/C#16TSH), #14GND	
I-1036	3/4"	PLC-1	FIT-135	2/C#16TSH, #14GND	
I-1037	3/4"	FIT-135	FE-135	CABLE BY MANUF.	
I-1038	3/4"	PLC-1	LIT-131	2/C#16TSH, #14GND	
I-1039	3/4"	LIT-131	LE-131	CABLE BY MANUF.	
I-1040	1-1/2"	PLC-1	CAUSTIC SKID	4-(2/C#16TSH), #14GND	
I-1041	3/4"	PLC-1	FIT-134	2/C#16TSH, #14GND	
I-1042	3/4"	FIT-134	FE-134	CABLE BY MANUF.	
I-1043	3/4"	PLC-1	LIT-129	2/C#16TSH, #14GND	
I-1044	3/4"	LIT-129	LE-129	CABLE BY MANUF.	
I-1045	1-1/2"	PLC-1	CORROSION INHIBITOR SKID	4-(2/C#16TSH), #14GND	
I-1046	3/4"	PLC-1	FIT-136	2/C#16TSH, #14GND	
I-1047	3/4"	FIT-136	FE-136	CABLE BY MANUF.	
I-1048	3/4"	PLC-1	CO2 SYSTEM PRESSURE SOLUTION FEED CP	2/C#16TSH, #14GND	
I-1049	3/4"	PLC-1	AIT-160	2/C#16TSH, #14GND	
I-1050	1"	PLC-1	CALCITE EFFLUENT PANEL	2-(2/C#16TSH), #14GND	AIT-162
I-1051	1"	PLC-1	LIT-161	2/C#16TSH, #14GND	
I-1052	3/4"	LIT-161	LE-161	CABLE BY MANUF.	
I-1053	1"	PLC-1	PIT-180	2/C#16TSH, #14GND	
I-1054	1"	PLC-1	FIT-167	2/C#16TSH, #14GND	
I-1055	3/4"	FIT-167	FE-167	CABLE BY MANUF.	
I-1056	1"	PLC-1	FINISHED WATER EFFLUENT PANEL	2-(2/C#16TSH), #14GND	AIT-168
I-1057	1"	PLC-1	LIT-170	2/C#16TSH, #14GND	
I-1058	3/4"	LIT-170	LE-170	CABLE BY MANUF.	
I-1059	1"	PLC-1	CALCITE INFLUENT PANEL	2-(2/C#16TSH), #14GND	AIT-179
I-1060	1"	PLC-1	FIT-187	2/C#16TSH, #14GND	
I-1061	3/4"	FIT-187	FE-187	CABLE BY MANUF.	
I-1062	1"	PLC-1	FUTURE AMMONIA SYSTEM	EMPTY W/ PULLSTRING	FUTURE - SHOP/STORAGE AREA
I-1063	1"	PLC-1	FUTURE AMMONIA SYSTEM	EMPTY W/ PULLSTRING	FUTURE - SHOP/STORAGE AREA
I-1064	1"	PLC-1	FUTURE AMMONIA SYSTEM	EMPTY W/ PULLSTRING	FUTURE - SHOP/STORAGE AREA
I-1065	1"	PLC-1	LIT-189	2/C#16TSH, #14GND	
I-1066	3/4"	LIT-189	LE-189	CABLE BY MANUF.	
I-1067	1-1/2"	PLC-1	FLUORIDE SKID	4-(2/C#16TSH), #14GND	
I-1068	1"	PLC-1	FIT-191	2/C#16TSH, #14GND	
I-1069	3/4"	FIT-191	FE-191	CABLE BY MANUF.	
I-1070	2"	PLC-1	EMH-1	EMPTY W/ PULLSTRING	
I-1071	2"	PLC-1	EMH-1	EMPTY W/ PULLSTRING	
I-1072	2"	EMH-1	EMH-3	EMPTY W/ PULLSTRING	
I-1073	2"	EMH-1	EMH-3	EMPTY W/ PULLSTRING	
I-1074	1"	PLC-1	LIT-501	2/C#16TSH, #14GND	
I-1075	3/4"	LIT-501	LE-501	CABLE BY MANUF.	
I-1076	1"	PLC-1	LIT-502	2/C#16TSH, #14GND	
I-1077	3/4"	LIT-502	LE-502	CABLE BY MANUF.	
I-1078				NOT USED	
I-1079	3/4"	PLC-1	HIGH SERVICE PUMP/VALVE PANEL NO. 1	1-(CAT-6), #14GND	
I-1080	3/4"	PLC-1	HIGH SERVICE PUMP/VALVE PANEL NO. 2	1-(CAT-6), #14GND	
I-1081	3/4"	PLC-1	HIGH SERVICE PUMP/VALVE PANEL NO. 3	1-(CAT-6), #14GND	
I-1082	3/4"	PLC-1	FUTURE HIGH SERVICE PUMP/VALVE PANEL	EMPTY W/ PULLSTRING	FUTURE
I-1083	3/4"	PLC-1	FUTURE HIGH SERVICE PUMP/VALVE PANEL	EMPTY W/ PULLSTRING	FUTURE
I-1084				NOT USED	
I-1085	1"	PLC-2-1	MEMBRANE FEED PUMP NO.1 VFD	3-(2/C#16TSH), #14GND	
I-1086				NOT USED	
I-1087	1"	PLC-2-2	MEMBRANE FEED PUMP NO.2 VFD	3-(2/C#16TSH), #14GND	
I-1088				NOT USED	
I-1089				NOT USED	
I-1090	1"	FUTURE PLC-2-3	FUTURE MEMBRANE FEED PUMP NO.3 VFD	EMPTY W/ PULLSTRING	FUTURE
I-1091				NOT USED	
I-1092	1"	FUTURE PLC-2-4	FUTURE MEMBRANE FEED PUMP NO.4 VFD	EMPTY W/ PULLSTRING	FUTURE
I-1093				NOT USED	
I-1094	3/4"	PLC-3	HYDROGEN DETECTOR	2/C#16TSH, #14GND	AE-301
I-1095	3/4"	PLC-3	LIT-324	2/C#16TSH, #14GND	
I-1096	3/4"	LIT-324	LE-324	CABLE BY MANUF.	
I-1097	3/4"	PLC-3	LIT-325	2/C#16TSH, #14GND	
I-1098	3/4"	LIT-325	LE-325	CABLE BY MANUF.	
I-1099	3/4"	PLC-3	HYPOCHLORITE METERING PUMP NO.1	2-(2/C#16TSH), #14GND	

CONDUIT NO.	SIZE	FROM	TO	CONDUCTORS	REMARKS
I-1100	3/4"	PLC-3	HYPOCHLORITE METERING PUMP NO.2	2-(2/C#16TSH), #14GND	
I-1101	3/4"	PLC-3	HYPOCHLORITE METERING PUMP NO.3	2-(2/C#16TSH), #14GND	
I-1102				NOT USED	
I-1103	1"	MCC-RO	CPB-CP-1	2-(2/C#16TSH), #14GND	
I-1104	3/4"	CPB-CP-1	HS-CP-1	2-(2/C#16TSH), #14GND	
I-1105				NOT USED	
I-1106				NOT USED	
I-1107				NOT USED	
I-1108				NOT USED	
I-1109				NOT USED	
I-1110				NOT USED	
I-1111				NOT USED	
I-1112				NOT USED	
I-1113				NOT USED	
I-1114				NOT USED	
I-1115				NOT USED	
I-1116				NOT USED	
I-1117				NOT USED	
I-1118				NOT USED	
I-1119				NOT USED	
I-1120				NOT USED	
I-1121				NOT USED	
I-1122				NOT USED	
I-1123				NOT USED	
I-1124				NOT USED	
I-1125				NOT USED	
I-1126				NOT USED	
I-1127				NOT USED	
I-1128				NOT USED	
I-1129				NOT USED	
I-1130				NOT USED	
I-1131				NOT USED	
I-1132				NOT USED	
I-1133				NOT USED	
I-1134				NOT USED	
I-1135				NOT USED	
I-1136				NOT USED	
I-1137				NOT USED	
I-1138				NOT USED	
I-1139				NOT USED	
I-1140				NOT USED	
I-1141				NOT USED	
I-1142				NOT USED	
I-1143				NOT USED	
I-1144				NOT USED	
I-1145				NOT USED	
I-1146				NOT USED	
I-1147				NOT USED	
I-1148				NOT USED	
I-1149				NOT USED	
I-1150				NOT USED	
I-1151				NOT USED	
I-1152				NOT USED	
I-1153				NOT USED	
I-1154				NOT USED	
I-1155				NOT USED	
I-1156				NOT USED	
I-1157				NOT USED	
I-1158				NOT USED	
I-1159				NOT USED	
I-1160				NOT USED	
I-1161				NOT USED	
I-1162				NOT USED	
I-1163				NOT USED	
I-1164				NOT USED	
I-1165				NOT USED	
I-1166				NOT USED	
I-1167				NOT USED	
I-1168				NOT USED	
I-1169				NOT USED	
I-1170				NOT USED	
I-1171				NOT USED	
I-1172				NOT USED	
I-1173				NOT USED	
I-1174				NOT USED	
I-1175				NOT USED	
I-1176				NOT USED	
I-1177				NOT USED	
I-1178				NOT USED	
I-1179				NOT USED	
I-1180				NOT USED	
I-1181				NOT USED	
I-1182				NOT USED	
I-1183				NOT USED	
I-1184				NOT USED	
I-1185				NOT USED	
I-1186				NOT USED	
I-1187				NOT USED	
I-1188				NOT USED	
I-1189				NOT USED	
I-1190				NOT USED	
I-1191				NOT USED	
I-1192				NOT USED	
I-1193				NOT USED	
I-1194				NOT USED	
I-1195				NOT USED	
I-1196				NOT USED	
I-1197				NOT USED	
I-1198				NOT USED	
I-1199				NOT USED	

REVISIONS

THE WOOTEN COMPANY
120 North Boylan Avenue Raleigh, NC 27603-1423
919.828.0531 Fax 919.834.3369
License Number: F-1015

BRUNSWICK REGIONAL WATER AND SEWER H2GO
BRUNSWICK COUNTY NORTH CAROLINA
CONTRACT No. 4
REVERSE OSMOSIS WATER TREATMENT PLANT

ELECTRICAL-RO TREATMENT BUILDING
CONDUIT AND WIRE SCHEDULES

NORTH CAROLINA PROFESSIONAL ENGINEER SEAL 16765 DocuSigned by: ROBERT E. GANT

DESIGNED BY: JJS/REE
DRAWN BY: PMD/EML
CHECKED BY: REE
PROJECT NO.: 3081-AB
DATE: JUNE 7, 2020
SCALE: AS NOTED

SHEET 128 OF 181

E117

pdf2013.pltcfg
10.0000 " / in.
began 1:29:58 PM 6/2/2020
T:\Projects\Brunswick_Regional_W&S_H2GO-3081\AB-Water_Supply&Treatment_Plant\Sheets\WTP\Electrical\RO Plant Elect Sheets.dgn

DocuSign Envelope ID: 15CE123C-6E50-4D83-BC50-B8D25C91C3E7

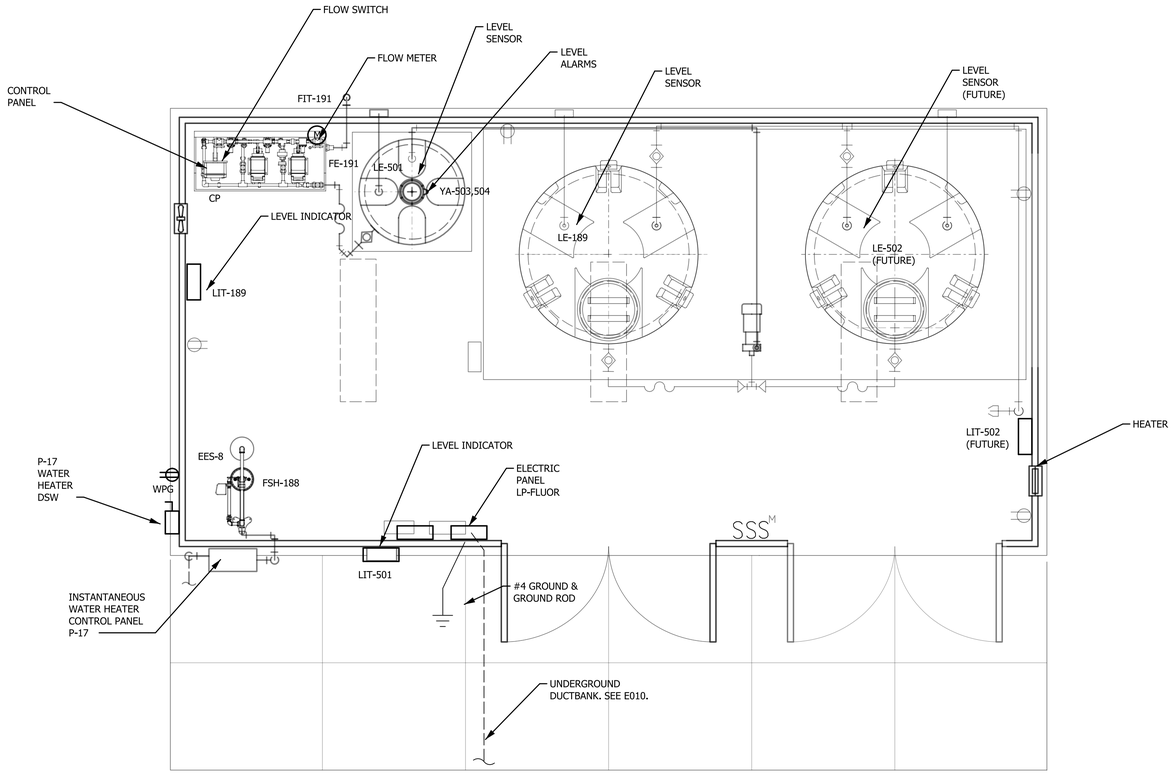

1 E156 ELECTRICAL-FLUORIDE FEED FACILITY
SCALE: 1/2" = 1'-0"

NOTE:
ALL POWER CIRCUITTING, LIGHTING, DEVICES, AND BRANCH PANEL BOARD IN FLUORIDE FEED BUILDING PROVIDED BY BUILDING SUPPLIER. WATER HEATER, ASSOCIATED DISCONNECT AND FEEDER BY CONTRACTOR. POWER FEEDER TO BRANCH PANEL IN BUILDING TO BE BY CONTRACTOR.

REVISIONS

THE WOOTEN COMPANY
120 North Boylan Avenue Raleigh, NC 27603-1423
919.828.0531 Fax 919.831.1589
License Number: F-0115

BRUNSWICK REGIONAL WATER AND SEWER H2GO
BRUNSWICK COUNTY NORTH CAROLINA
CONTRACT No. 4
REVERSE OSMOSIS WATER TREATMENT PLANT
ELECTRICAL
FLUORIDE FEED FACILITY

NORTH CAROLINA PROFESSIONAL ENGINEER 16765 ROBERT E. EGAN

DESIGNED BY: JJS/REE
DRAWN BY: PMD/EML
CHECKED BY: REE
PROJECT NO.: 3081-AB
DATE: JUNE 7, 2020
SCALE: AS NOTED

SHEET 129 OF 181

E156

pdf2013.pltcfg
2.0000 " / in.
began 9:55:35 AM
6/3/2020
T:\Projects\Brunswick_Regional_W&S_H2GO-3081\AB-Water_Supply&Treatment_Plant\Sheets\WTP\Electrical\RO Plant Elect Sheets.dgn

DocuSign Envelope ID: 8A858BC0-49BC-4FE5-96CE-7BD5CFB33DB7

E200-CO2 Elect Plan

NOTES:

1. MOUNT FIXTURE TYPE LP1 12'-0" AFF.

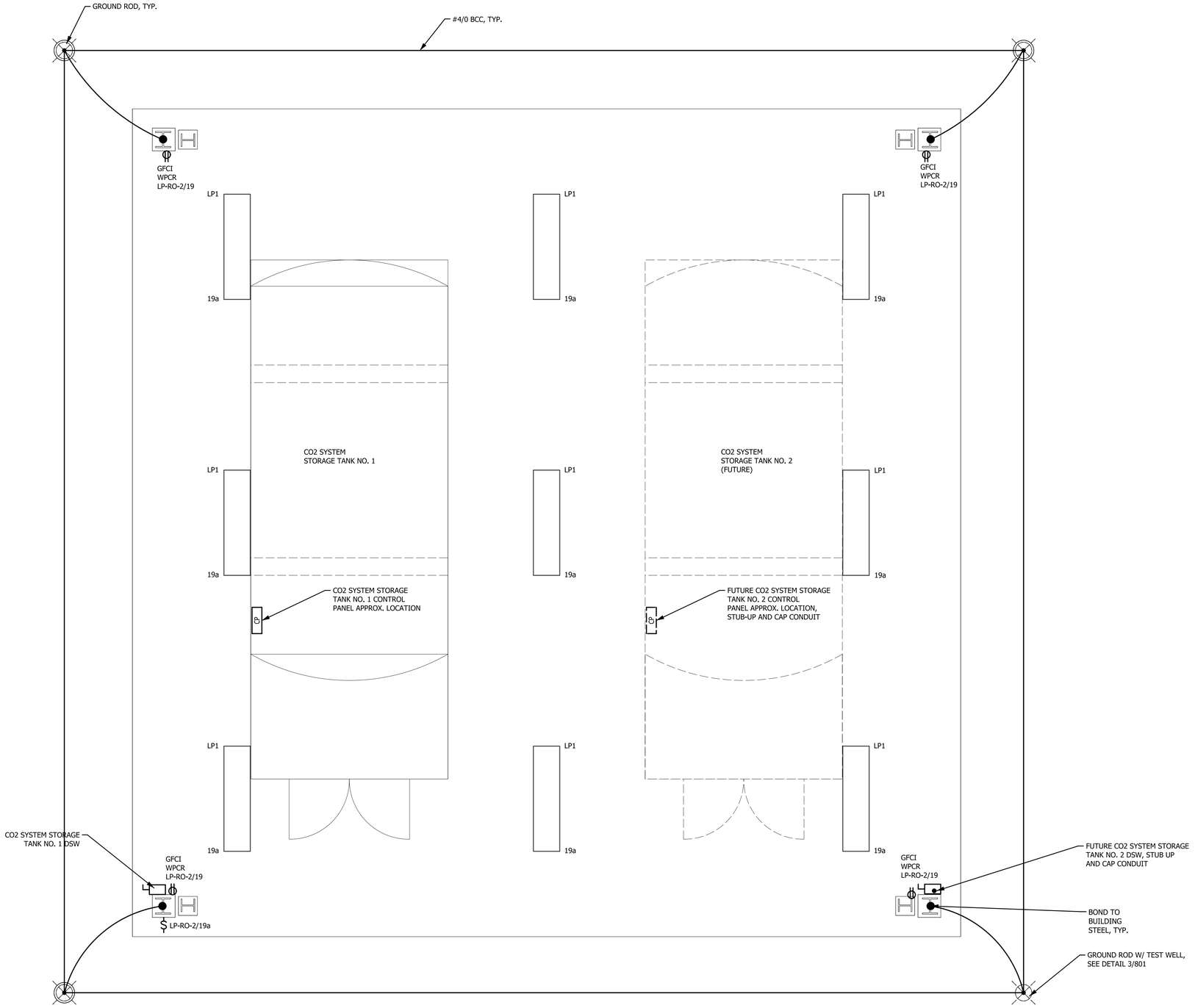

1 E200 ELECTRICAL - CO2 FACILITY-POWER & LIGHTING PLAN
SCALE: 1/2"=1'-0"

2' 1' 0 2' 4' 6'
SCALE: 1/2" = 1'-0"

REVISIONS

THE WOOTEN COMPANY
120 North Boylan Avenue Raleigh NC 27603-1423
919.828.0531 fax 919.834.3589
License Number: F-0115

BRUNSWICK REGIONAL WATER AND SEWER H2GO
BRUNSWICK COUNTY NORTH CAROLINA
CONTRACT No. 4
REVERSE OSMOSIS WATER TREATMENT PLANT
ELECTRICAL-CO2 FACILITY
POWER & LIGHTING PLAN

NORTH CAROLINA PROFESSIONAL 16765 ENGINEER ROBERT E. EGAN

DESIGNED BY:	JJS/REE
DRAWN BY:	PMD/EML
CHECKED BY:	REE
PROJECT NO.:	3081-AB
DATE:	JUNE 7, 2020
SCALE:	AS NOTED

SHEET 130 OF 181

E200

pdf2013.pltcfg
2.0000 ' / in.
began
6/2/2020 1:30:23 PM
T:\Projects\Brunswick_Regional_W&S_H2GO-3081\AB-Water_Supply&Treatment_Plant\Sheets\WTP\Electrical\RO Plant Elect Sheets.dgn

DocuSign Envelope ID: 8A858BC0-49BC-4FE5-96CE-7BD5CFB33DB7

E300-Calcite Elcet Plan

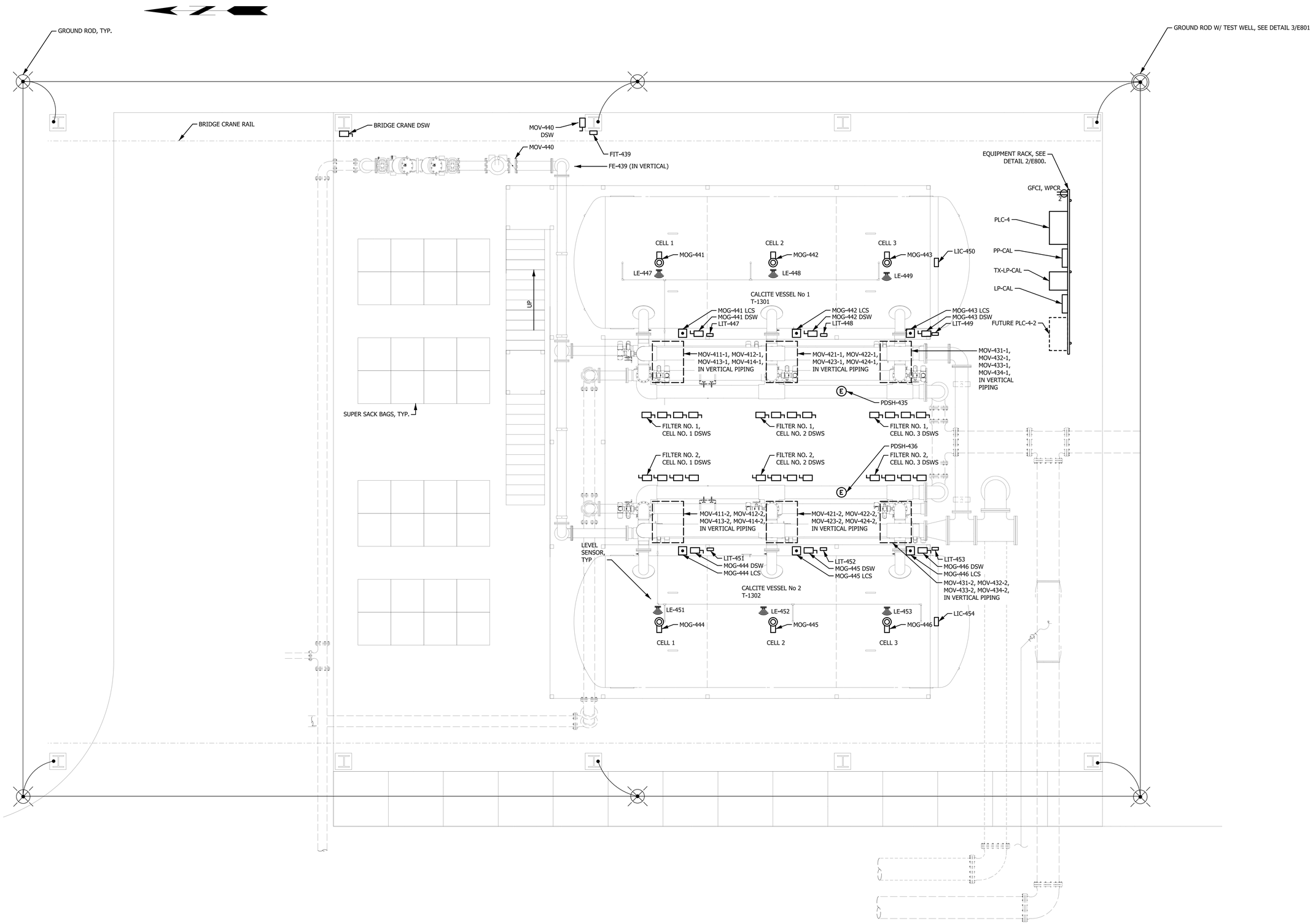

1 E300 ELECTRICAL-CALCITE FACILITY POWER PLAN
SCALE: 1/4"=1'-0"

4' 2' 0 4' 8' 12'
SCALE: 1/4"= 1'-0"

REVISIONS

THE WOOTEN COMPANY
120 North Boylan Avenue Raleigh, NC 27603-1423
919.828.0531 fax 919.834.3589
License Number: F-0115

BRUNSWICK REGIONAL WATER AND SEWER H2GO
BRUNSWICK COUNTY NORTH CAROLINA
CONTRACT No. 4
REVERSE OSMOSIS WATER TREATMENT PLANT
ELECTRICAL-CALCITE FACILITY POWER PLAN

NORTH CAROLINA PROFESSIONAL 16765 ENGINEER ROBERT E. EGAN

DESIGNED BY:	JJS/REE
DRAWN BY:	PMD/EML
CHECKED BY:	REE
PROJECT NO.:	3081-AB
DATE:	JUNE 7, 2020
SCALE:	AS NOTED

SHEET 131 OF 181

E300

pdf2013.pltcfg
4.0000 ' / in.
began
6/2/2020 1:30:24 PM
T:\Projects\Brunswick_Regional_W&S_H2GO-3081\AB-Water_Supply&Treatment_Plant\Sheets\WTP\Electrical\RO Plant Elect Sheets.dgn

DocuSign Envelope ID: 8A858BC0-49BC-4FE5-96CE-7BD5CFB33DB7

NOTES:

1. MOUNT FIXTURE TYPE LP3 37'-0" AFF.

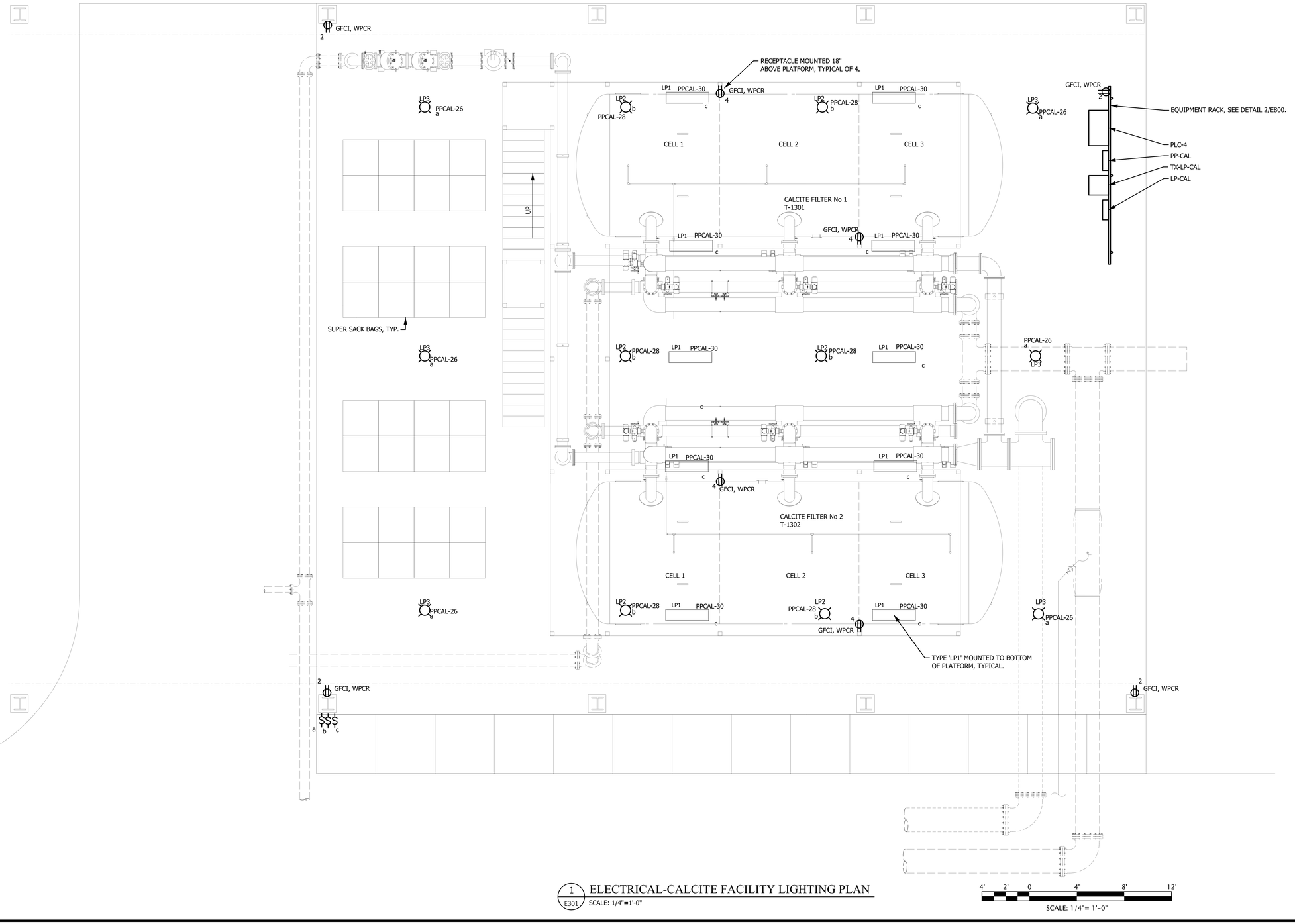

1 E301 ELECTRICAL-CALCITE FACILITY LIGHTING PLAN
SCALE: 1/4"=1'-0"

4' 2' 0 4' 8' 12'
SCALE: 1/4"= 1'-0"

REVISIONS

THE WOOTEN COMPANY
120 North Boylan Avenue Raleigh, NC 27603-1423
919.828.0531 Fax 919.821.5389
License Number: F-0115

BRUNSWICK REGIONAL WATER AND SEWER H2GO
BRUNSWICK COUNTY NORTH CAROLINA
CONTRACT No. 4
REVERSE OSMOSIS WATER TREATMENT PLANT
ELECTRICAL-CALCITE FACILITY LIGHTING PLAN

NORTH CAROLINA PROFESSIONAL ENGINEER 16765 ROBERT E. EGAN
DocuSigned by:

DESIGNED BY: JJS/REE
DRAWN BY: PMD/EML
CHECKED BY: REE
PROJECT NO.: 3081-AB
DATE: JUNE 7, 2020
SCALE: AS NOTED

SHEET 132 OF 181

E301

E301 -Calcite Ltg Plan
pdf2013.pltcfg
4.0000 ' / in.
began 1:30:25 PM
6/2/2020
T:\Projects\Brunswick_Regional_W&S_H2GO-3081\AB-Water_Supply&Treatment_Plant\Sheets\WTP\Electrical\RO Plant Elect Sheets.dgn

DocuSign Envelope ID: 8A858BC0-49BC-4FE5-96CE-7BD5CFB33DB7

NOTES:

1. 2#12, #12GND, 3/4" C

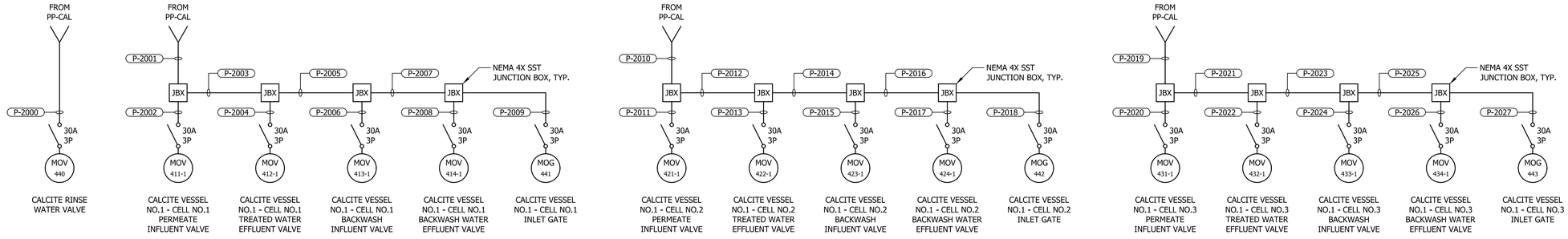

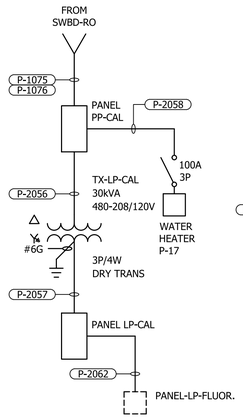

CALCITE VESSEL
RISER DIAGRAM

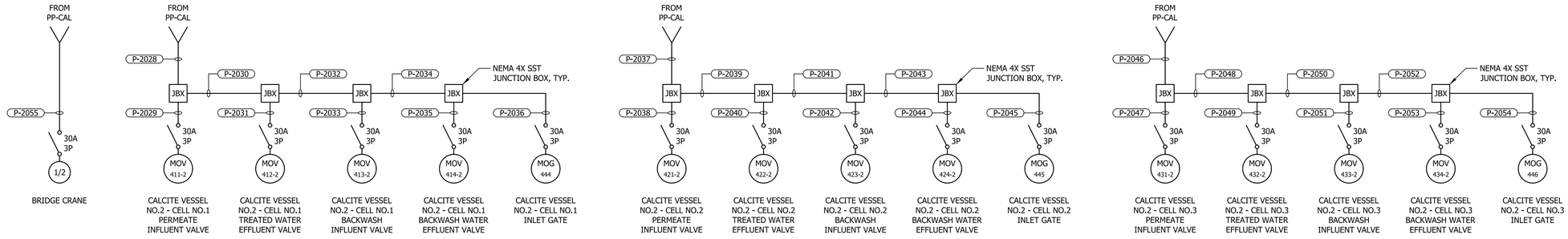

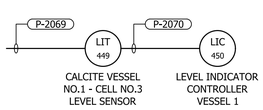



CALCITE VESSELS VALVES
RISER DIAGRAM

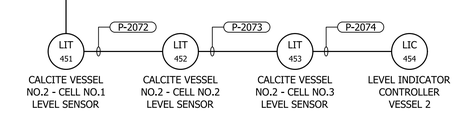

480Y/277 VOLTS, 3 PHASE, 4 WIRE — PANEL PP-CAL — MAIN BREAKER 300A 3P — TYPE: NEMA 3R — MOUNT: SURFACE

DESCRIPTION	WIRE	TRIP	POLE	No.	VOLT-AMPERES A	VOLT-AMPERES B	VOLT-AMPERES C	VOLT-AMPERES A	VOLT-AMPERES B	VOLT-AMPERES C	No.	POLE	TRIP	WIRE	DESCRIPTION
MOV-440	P-2000	20	3	1	500			1,000			2				
				3		500			1,000		4	3	20	P-2055	CALCITE BRIDGE CRANE
				5			500			1,000	6				
CALCITE FILTER NO.1 - CELL 1 VALVES	SEE RISER DIAGRAM	20	3	7	2,500			2,500			8				
				9		2,500			2,500		10	3	20	SEE RISER DIAGRAM	CALCITE FILTER NO.2 - CELL 1 VALVES
				11			2,500			2,500	12				
CALCITE FILTER NO.1 - CELL 2 VALVES	SEE RISER DIAGRAM	20	3	13	2,500			2,500			14				
				15		2,500			2,500		16	3	20	SEE RISER DIAGRAM	CALCITE FILTER NO.2 - CELL 2 VALVES
				17			2,500			2,500	18				
CALCITE FILTER NO.1 CELL 3 VALVES	SEE RISER DIAGRAM	20	3	19	2,500			2,500			20				
				21		2,500			2,500		22	3	20	SEE RISER DIAGRAM	CALCITE FILTER NO.2 CELL 3 VALVES
				23			2,500			2,500	24				
SPARE		20	3	25	---			2,400			26	1	20	3#12, 3/4"C.	HIGH BAY LIGHTS
				27		---			1,530		28	1	20	3#12, 3/4"C.	OVER PLATFORM LIGHTS
				29			---			750	30	1	20	3#12, 3/4"C.	UNDER PLATFORM LIGHTS
SPARE		20	3	31	---			---			32	1	20		SPARE
				33		---			---		34	1	20		SPARE
				35			---			---	36	1	20		SPARE
FLUORIDE FACILITY WATER HEATER P-17	P-2058	90	3	37	18,000			8,700			38				
				39		18,000			6,500		40	3	50	P-2056	LP-CAL (VIA TX-LP-CAL)
				41			18,000			6,900	42				

NOTES:
*22kAIC
*SPD - 200kA

TOTAL	26,000	26,000	26,000	19,600	16,530	16,150	TOTAL
	PHASE TOTAL			TOTAL LOAD			
	45,600	42,530	42,150	130,280			

TOTAL LOAD (AMPS)
156.7
52.2%

208/120 VOLTS, 3 PHASE, 4 WIRE — PANEL LP-CAL — MAIN BREAKER 100A 3P — TYPE: NEMA 3R — MOUNT: SURFACE

DESCRIPTION	WIRE	TRIP	POLE	No.	VOLT-AMPERES A	VOLT-AMPERES B	VOLT-AMPERES C	VOLT-AMPERES A	VOLT-AMPERES B	VOLT-AMPERES C	No.	POLE	TRIP	WIRE	DESCRIPTION
LIGHTING - CALCITE	2#10, #10GND	30	2	1	2,400			900			2	1	20	3#12, 3/4"C.	RECEPT. - CALCITE
				3		2,400			900		4	1	20	3#12, 3/4"C.	RECEPT. - CALCITE
LIGHTING - CALCITE	2#10, #10GND	30	2	5			2,400			1,500	6	1	20	P-2060	PLC-4
				7	2,400			---			8	1	20	P-2067	LIT-447
FIT-439	P-2061	20	1	9		200			---		10	1	20	P-2071	LIT-450
FLUORIDE FACILITY PANEL	P-2062	60	3	11			3,000			---	12	1	20	P-2071	PDSH-435
				13	3,000			---			14	1	20		SPARE
				15		3,000			---		16	1	20		SPARE
SPARE		20	1	17			---			---	18	1	20		SPARE
SPARE		20	1	19	---			---			20	1	20		SPARE
SPARE		20	1	21		---			---		22	1	20		SPARE
SPARE		20	1	23			---			---	24	1	20		SPARE

NOTES:
*10kAIC
*SPD - 100kA

TOTAL	7,800	5,600	5,400	900	900	1,500	TOTAL
	PHASE TOTAL			TOTAL LOAD			
	8,700	6,500	6,900	22,100			

TOTAL LOAD (AMPS)
61.3
61.3%

REVISIONS

THE WOOTEN COMPANY
120 North Boylan Avenue Raleigh, NC 27603-1423
919.828.0531 Fax 919.831.1589
License Number: F-0115

BRUNSWICK REGIONAL WATER AND SEWER H2GO
BRUNSWICK COUNTY NORTH CAROLINA
CONTRACT No. 4
REVERSE OSMOSIS WATER TREATMENT PLANT

ELECTRICAL-CALCITE FACILITY
PANEL SCHEDULES & RISER DIAGRAMS

NORTH CAROLINA PROFESSIONAL ENGINEER 16765 DocuSigned by: ROBERT E. EDGE SEAL

DESIGNED BY: JJS/REE
DRAWN BY: PMD/EML
CHECKED BY: REE
PROJECT NO.: 3081-AB
DATE: JUNE 7, 2020
SCALE: AS NOTED

SHEET 133 OF 181

E302

DocuSign Envelope ID: 8A858BC0-49BC-4FE5-96CE-7BD5CFB33DB7

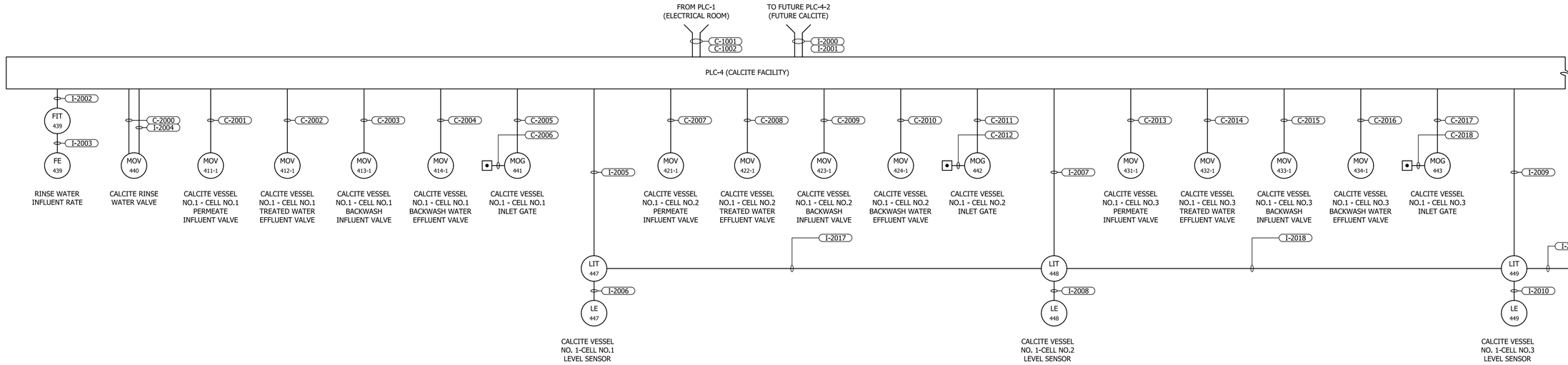

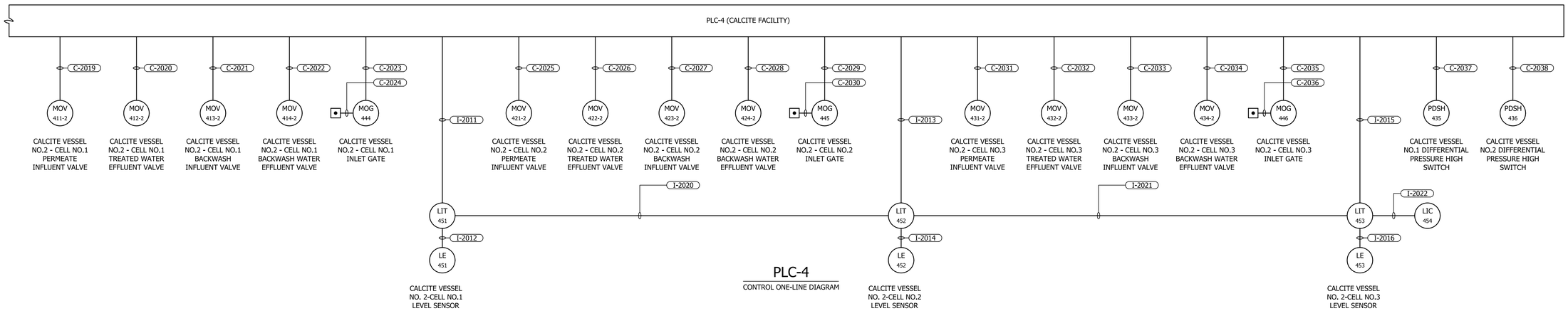

PLC-4
CONTROL ONE-LINE DIAGRAM

REVISIONS

THE WOOTEN COMPANY
120 North Boylan Avenue Raleigh, NC 27603-1423
919.828.0531 Fax 919.831.1589
License Number: F-0113

BRUNSWICK REGIONAL WATER AND SEWER H2GO
BRUNSWICK COUNTY NORTH CAROLINA
CONTRACT No. 4
REVERSE OSMOSIS WATER TREATMENT PLANT
ELECTRICAL-CALCITE FACILITY
CONTROL ONE-LINE DIAGRAM

NORTH CAROLINA PROFESSIONAL ENGINEER 16765 ROBERT E. EGAN
DocuSigned by: 6/2/2020

DESIGNED BY:	JJS/REE
DRAWN BY:	PMD/EML
CHECKED BY:	REE
PROJECT NO.:	3081-AB
DATE:	JUNE 7, 2020
SCALE:	AS NOTED

SHEET 134 OF 181

E303

DocuSign Envelope ID: 8A858BC0-49BC-4FE5-96CE-7BD5CFB33DB7

CONDUIT NO.	SIZE	FROM	TO	CONDUCTORS	REMARKS
P-2000	3/4"	PP-CAL	MOV-440	3#12, #12GND	VIA DSW
P-2001	3/4"	PP-CAL	MOV-411-1 JBX	3#12, #12GND	
P-2002	3/4"	MOV-411-1 JBX	MOV-411-1	3#12, #12GND	VIA DSW
P-2003	3/4"	MOV-411-1 JBX	MOV-412-1 JBX	3#12, #12GND	
P-2004	3/4"	MOV-412-1 JBX	MOV-412-1	3#12, #12GND	VIA DSW
P-2005	3/4"	MOV-412-1 JBX	MOV-413-1 JBX	3#12, #12GND	
P-2006	3/4"	MOV-413-1 JBX	MOV-413-1	3#12, #12GND	VIA DSW
P-2007	3/4"	MOV-413-1 JBX	MOV-414-1 JBX	3#12, #12GND	
P-2008	3/4"	MOV-414-1 JBX	MOV-414-1	3#12, #12GND	VIA DSW
P-2009	3/4"	MOV-414-1 JBX	MOG-441	3#12, #12GND	VIA DSW
P-2010	3/4"	PP-CAL	MOV-421-1 JBX	3#12, #12GND	
P-2011	3/4"	MOV-421-1 JBX	MOV-421-1	3#12, #12GND	VIA DSW
P-2012	3/4"	MOV-421-1 JBX	MOV-422-1 JBX	3#12, #12GND	
P-2013	3/4"	MOV-422-1 JBX	MOV-422-1	3#12, #12GND	VIA DSW
P-2014	3/4"	MOV-422-1 JBX	MOV-423-1 JBX	3#12, #12GND	
P-2015	3/4"	MOV-423-1 JBX	MOV-423-1	3#12, #12GND	VIA DSW
P-2016	3/4"	MOV-423-1 JBX	MOV-424-1 JBX	3#12, #12GND	
P-2017	3/4"	MOV-424-1 JBX	MOV-424-1	3#12, #12GND	VIA DSW
P-2018	3/4"	MOV-424-1 JBX	MOG-442	3#12, #12GND	VIA DSW
P-2019	3/4"	PP-CAL	MOV-431-1 JBX	3#12, #12GND	
P-2020	3/4"	MOV-431-1 JBX	MOV-431-1	3#12, #12GND	VIA DSW
P-2021	3/4"	MOV-431-1 JBX	MOV-432-1 JBX	3#12, #12GND	
P-2022	3/4"	MOV-432-1 JBX	MOV-432-1	3#12, #12GND	VIA DSW
P-2023	3/4"	MOV-432-1 JBX	MOV-433-1 JBX	3#12, #12GND	
P-2024	3/4"	MOV-433-1 JBX	MOV-433-1	3#12, #12GND	VIA DSW
P-2025	3/4"	MOV-433-1 JBX	MOV-434-1 JBX	3#12, #12GND	
P-2026	3/4"	MOV-434-1 JBX	MOV-434-1	3#12, #12GND	VIA DSW
P-2027	3/4"	MOV-434-1 JBX	MOG-443	3#12, #12GND	VIA DSW
P-2028	3/4"	PP-CAL	MOV-411-2 JBX	3#12, #12GND	
P-2029	3/4"	MOV-411-2 JBX	MOV-411-2	3#12, #12GND	VIA DSW
P-2030	3/4"	MOV-411-2 JBX	MOV-412-2 JBX	3#12, #12GND	
P-2031	3/4"	MOV-412-2 JBX	MOV-412-2	3#12, #12GND	VIA DSW
P-2032	3/4"	MOV-412-2 JBX	MOV-413-2 JBX	3#12, #12GND	
P-2033	3/4"	MOV-413-2 JBX	MOV-413-2	3#12, #12GND	VIA DSW
P-2034	3/4"	MOV-413-2 JBX	MOV-414-2 JBX	3#12, #12GND	
P-2035	3/4"	MOV-414-2 JBX	MOV-414-2	3#12, #12GND	VIA DSW
P-2036	3/4"	MOV-414-2 JBX	MOG-444	3#12, #12GND	VIA DSW
P-2037	3/4"	PP-CAL	MOV-421-2 JBX	3#12, #12GND	
P-2038	3/4"	MOV-421-2 JBX	MOV-421-2	3#12, #12GND	VIA DSW
P-2039	3/4"	MOV-421-2 JBX	MOV-422-2 JBX	3#12, #12GND	
P-2040	3/4"	MOV-422-2 JBX	MOV-422-2	3#12, #12GND	VIA DSW
P-2041	3/4"	MOV-422-2 JBX	MOV-423-2 JBX	3#12, #12GND	
P-2042	3/4"	MOV-423-2 JBX	MOV-423-2	3#12, #12GND	VIA DSW
P-2043	3/4"	MOV-423-2 JBX	MOV-424-2 JBX	3#12, #12GND	
P-2044	3/4"	MOV-424-2 JBX	MOV-424-2	3#12, #12GND	VIA DSW
P-2045	3/4"	MOV-424-2 JBX	MOG-445	3#12, #12GND	VIA DSW
P-2046	3/4"	PP-CAL	MOV-431-2 JBX	3#12, #12GND	
P-2047	3/4"	MOV-431-2 JBX	MOV-431-2	3#12, #12GND	VIA DSW
P-2048	3/4"	MOV-431-2 JBX	MOV-432-2 JBX	3#12, #12GND	
P-2049	3/4"	MOV-432-2 JBX	MOV-432-2	3#12, #12GND	VIA DSW
P-2050	3/4"	MOV-432-2 JBX	MOV-433-2 JBX	3#12, #12GND	
P-2051	3/4"	MOV-433-2 JBX	MOV-433-2	3#12, #12GND	VIA DSW
P-2052	3/4"	MOV-433-2 JBX	MOV-434-2 JBX	3#12, #12GND	
P-2053	3/4"	MOV-434-2 JBX	MOV-434-2	3#12, #12GND	VIA DSW
P-2054	3/4"	MOV-434-2 JBX	MOG-446	3#12, #12GND	VIA DSW
P-2055	3/4"	PP-CAL	BRIDGE CRANE	3#12, #12GND	VIA DSW
P-2056	3/4"	PP-CAL	TX-LP-CAL	3#8, #10GND	
P-2057	1-1/2"	TX-LP-CAL	LP-CAL	4#3, #8GND	
P-2058	1-1/2"	PP-CAL	FLUORIDE FACILITY WATER HEATER	3#3, #8GND	VIA DSW
P-2059				NOT USED	
P-2060	3/4"	LP-CAL	PLC-4	2#12, #12GND	
P-2061	3/4"	LP-CAL	FIT-439	2#12, #12GND	
P-2062	1-1/2"	LP-CAL	FLUORIDE FACILITY PANEL LP-FLUOR	4#4, #8GND	
P-2063				NOT USED	
P-2064				NOT USED	
P-2065	3/4"	LP-CAL	PDSH-435	2#12, #12GND	
P-2066	3/4"	PDSH-435	PDSH-436	2#12, #12GND	
P-2067	3/4"	LP-CAL	LIT-447	2#12, #12GND	
P-2068	3/4"	LIT-447	LIT-448	2#12, #12GND	
P-2069	3/4"	LIT-448	LIT-449	2#12, #12GND	
P-2070	3/4"	LIT-449	LIC-450	2#12, #12GND	
P-2071	3/4"	LP-CAL	LIT-451	2#12, #12GND	
P-2072	3/4"	LIT-451	LIT-452	2#12, #12GND	
P-2073	3/4"	LIT-452	LIT-453	2#12, #12GND	
P-2074	3/4"	LIT-453	LIC-454	2#12, #12GND	
P-2075				NOT USED	
P-2076				NOT USED	
P-2077				NOT USED	
P-2078				NOT USED	
P-2079				NOT USED	
P-2080				NOT USED	
P-2081				NOT USED	
P-2082				NOT USED	
P-2083				NOT USED	
P-2084				NOT USED	
P-2085				NOT USED	
P-2086				NOT USED	
P-2087				NOT USED	
P-2088				NOT USED	
P-2089				NOT USED	
P-2090				NOT USED	
P-2091				NOT USED	
P-2092				NOT USED	
P-2093				NOT USED	
P-2094				NOT USED	
P-2095				NOT USED	
P-2096				NOT USED	
P-2097				NOT USED	
P-2098				NOT USED	
P-2099				NOT USED	

CONDUIT NO.	SIZE	FROM	TO	CONDUCTORS	REMARKS
C-2000	3/4"	PLC-4	MOV-440	10#14, #14GND	
C-2001	3/4"	PLC-4	MOV-411-1	10#14, #14GND	
C-2002	3/4"	PLC-4	MOV-412-1	10#14, #14GND	
C-2003	3/4"	PLC-4	MOV-413-1	10#14, #14GND	
C-2004	3/4"	PLC-4	MOV-414-1	10#14, #14GND	
C-2005	3/4"	PLC-4	MOG-441	10#14, #14GND	
C-2006	3/4"	MOG-441	MOG-441 LCS	10#14, #14GND	
C-2007	3/4"	PLC-4	MOV-421-1	10#14, #14GND	
C-2008	3/4"	PLC-4	MOV-422-1	10#14, #14GND	
C-2009	3/4"	PLC-4	MOV-423-1	10#14, #14GND	
C-2010	3/4"	PLC-4	MOV-424-1	10#14, #14GND	
C-2011	3/4"	PLC-4	MOG-442	10#14, #14GND	
C-2012	3/4"	MOG-442	MOG-442 LCS	10#14, #14GND	
C-2013	3/4"	PLC-4	MOV-431-1	10#14, #14GND	
C-2014	3/4"	PLC-4	MOV-432-1	10#14, #14GND	
C-2015	3/4"	PLC-4	MOV-433-1	10#14, #14GND	
C-2016	3/4"	PLC-4	MOV-434-1	10#14, #14GND	
C-2017	3/4"	PLC-4	MOG-443	10#14, #14GND	
C-2018	3/4"	MOG-443	MOG-443 LCS	10#14, #14GND	
C-2019	3/4"	PLC-4	MOV-411-2	10#14, #14GND	
C-2020	3/4"	PLC-4	MOV-412-2	10#14, #14GND	
C-2021	3/4"	PLC-4	MOV-413-2	10#14, #14GND	
C-2022	3/4"	PLC-4	MOV-414-2	10#14, #14GND	
C-2023	3/4"	PLC-4	MOG-444	10#14, #14GND	
C-2024	3/4"	MOG-444	MOG-444 LCS	10#14, #14GND	
C-2025	3/4"	PLC-4	MOV-421-2	10#14, #14GND	
C-2026	3/4"	PLC-4	MOV-422-2	10#14, #14GND	
C-2027	3/4"	PLC-4	MOV-423-2	10#14, #14GND	
C-2028	3/4"	PLC-4	MOV-424-2	10#14, #14GND	
C-2029	3/4"	PLC-4	MOG-445	10#14, #14GND	
C-2030	3/4"	MOG-445	MOG-445 LCS	10#14, #14GND	
C-2031	3/4"	PLC-4	MOV-431-2	10#14, #14GND	
C-2032	3/4"	PLC-4	MOV-432-2	10#14, #14GND	
C-2033	3/4"	PLC-4	MOV-433-2	10#14, #14GND	
C-2034	3/4"	PLC-4	MOV-434-2	10#14, #14GND	
C-2035	3/4"	PLC-4	MOG-446	10#14, #14GND	
C-2036	3/4"	MOG-446	MOG-446 LCS	10#14, #14GND	
C-2037	3/4"	PLC-4	PDSH-435	10#14, #14GND	
C-2038	3/4"	PLC-4	PDSH-436	10#14, #14GND	
C-2039				NOT USED	
C-2040				NOT USED	
C-2041				NOT USED	
C-2042				NOT USED	
C-2043				NOT USED	
C-2044				NOT USED	
C-2045				NOT USED	
C-2046				NOT USED	
C-2047				NOT USED	
C-2048				NOT USED	
C-2049				NOT USED	
C-2050				NOT USED	

CONDUIT NO.	SIZE	FROM	TO	CONDUCTORS	REMARKS
I-2000	2"	PLC-4	FUTURE PLC-4-2	EMPTY W/ PULLSTRING	FUTURE
I-2001	2"	PLC-4	FUTURE PLC-4-2	EMPTY W/ PULLSTRING	SPARE
I-2002	3/4"	PLC-4	FIT-439	2/C#16TSH, #14GND	
I-2003	3/4"	FIT-439	FE-439	CABLE BY MANUF.	
I-2004	3/4"	PLC-4	MOV-440	2-(2/C#16TSH), #14GND	
I-2005	3/4"	PLC-4	LIT-447	2/C#16TSH, #14GND	
I-2006	3/4"	LIT-447	LE-447	CABLE BY MANUF.	
I-2007	3/4"	PLC-4	LIT-448	2/C#16TSH, #14GND	
I-2008	3/4"	LIT-448	LE-448	CABLE BY MANUF.	
I-2009	3/4"	PLC-4	LIT-449	2/C#16TSH, #14GND	
I-2010	3/4"	LIT-449	LE-449	CABLE BY MANUF.	
I-2011	3/4"	PLC-4	LIT-451	2/C#16TSH, #14GND	
I-2012	3/4"	LIT-451	LE-451	CABLE BY MANUF.	
I-2013	3/4"	PLC-4	LIT-452	2/C#16TSH, #14GND	
I-2014	3/4"	LIT-452	LE-452	CABLE BY MANUF.	
I-2015	3/4"	PLC-4	LIT-453	2/C#16TSH, #14GND	
I-2016	3/4"	LIT-453	LE-453	CABLE BY MANUF.	
I-2017	3/4"	LIT-447	LIT-448	2/C#16TSH, #14GND	
I-2018	3/4"	LIT-448	LIT-449	2/C#16TSH, #14GND	
I-2019	3/4"	LIT-449	LIC-450	2/C#16TSH, #14GND	
I-2020	3/4"	LIT-451	LIT-452	2/C#16TSH, #14GND	
I-2021	3/4"	LIT-452	LIT-453	2/C#16TSH, #14GND	
I-2022	3/4"	LIT-453	LIC-454	2/C#16TSH, #14GND	
I-2023				NOT USED	
I-2024				NOT USED	
I-2025				NOT USED	

REVISIONS

THE WOOTEN COMPANY
120 North Boylan Avenue Raleigh, NC 27603-1423
919.828.0531 Fax 919.831.1589
License Number: F-1015

BRUNSWICK REGIONAL WATER AND SEWER H2GO
BRUNSWICK COUNTY NORTH CAROLINA
CONTRACT No. 4
REVERSE OSMOSIS WATER TREATMENT PLANT

ELECTRICAL-CALCITE FACILITY
CONDUIT AND WIRE SCHEDULES

NORTH CAROLINA PROFESSIONAL ENGINEER SEAL 16765 DocuSigned by: ROBERT E. EVANS

DESIGNED BY: JJS/REE
DRAWN BY: PMD/EML
CHECKED BY: REE
PROJECT NO.: 3081-AB
DATE: JUNE 7, 2020
SCALE: AS NOTED

SHEET 135 OF 181

E304

E304- Calcite Conduit and wire

pdf2013.pltcfg
10.0000 " / in.
began
6/2/2020 1:30:36 PM
T:\Projects\Brunswick_Regional_W&S_H2GO-3081\AB-Water_Supply&Treatment_Plant Sheets\WTP\Electrical\RO Plant Elect Sheets.dgn

DocuSign Envelope ID: 8A858BC0-49BC-4FE5-96CE-7BD5CFB33DB7

E400 - Storage Tank Plan

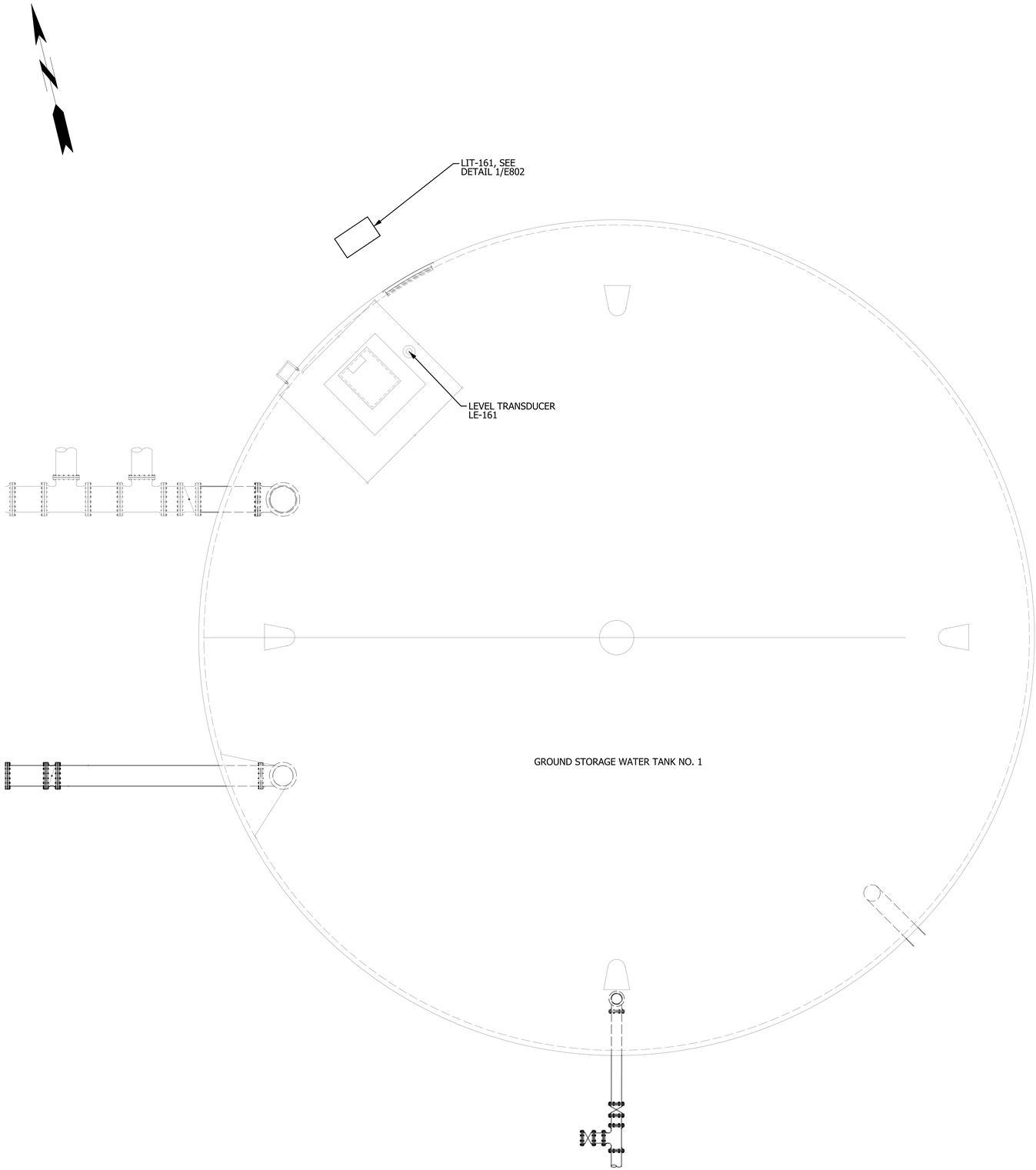

1 / E400 ELECTRICAL PLAN - FINISHED WATER STORAGE GROUND TANK
SCALE: 3/16"=1'-0"

5.33' 2.66' 0 5.33' 10.66' 16'
SCALE: 3/16" = 1'-0"

REVISIONS

THE WOOTEN COMPANY
120 North Boylan Avenue Raleigh, NC 27603-1423
919.828.0531 Fax 919.831.1589
License Number: F-0115

BRUNSWICK REGIONAL WATER AND SEWER H2GO
BRUNSWICK COUNTY NORTH CAROLINA
CONTRACT No. 4
REVERSE OSMOSIS WATER TREATMENT PLANT
ELECTRICAL-GROUND STORAGE FACILITY
POWER PLAN

NORTH CAROLINA PROFESSIONAL ENGINEER SEAL 16765 DocuSigned by: ROBERT E. EDWARDS

DESIGNED BY: JJS/REE
DRAWN BY: PMD/EML
CHECKED BY: REE
PROJECT NO.: 3081-AB
DATE: JUNE 7, 2020
SCALE: AS NOTED

SHEET 136 OF 181

E400

pdf2013.pltcfg
5.3333 sf / in.
began
6/2/2020 1:30:59 PM
T:\Projects\Brunswick_Regional_W&S_H2GO-3081\AB-Water_Supply&Treatment_Plant\Sheets\WTP\Electrical\RO Plant Elect Sheets.dgn

DocuSign Envelope ID: 8A858BC0-49BC-4FE5-96CE-7BD5CFB33DB7

E500-High Service Pumps Plan

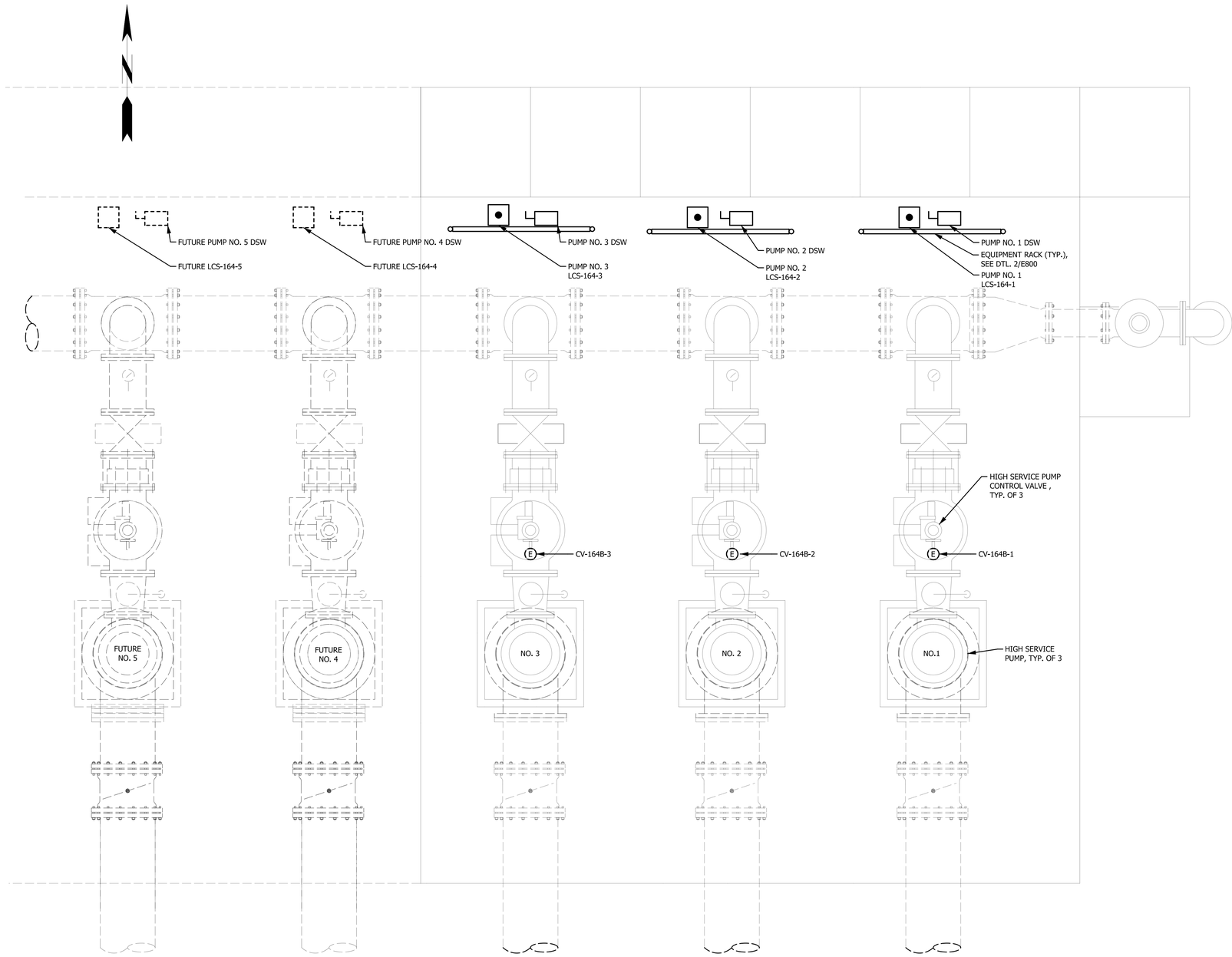

1 / E500 ELECTRICAL-HIGH SERVICE PUMP STATION POWER PLAN
SCALE: 1/2"=1'-0"

2' 1' 0 2' 4' 6'
SCALE: 1/2" = 1'-0"

REVISIONS

THE WOOTEN COMPANY
120 North Boylan Avenue Raleigh, NC 27603-1423
919.828.0531 Fax 919.834.5389
License Number: F-0115

BRUNSWICK REGIONAL WATER AND SEWER H2GO
BRUNSWICK COUNTY NORTH CAROLINA
CONTRACT No. 4
REVERSE OSMOSIS WATER TREATMENT PLANT
ELECTRICAL-HIGH SERVICE PUMP STATION
POWER PLAN

NORTH CAROLINA PROFESSIONAL ENGINEER 16765 DocuSigned by: ROBERT E. EGAN

DESIGNED BY: JJS/REE
DRAWN BY: PMD/EML
CHECKED BY: REE
PROJECT NO.: 3081-AB
DATE: JUNE 7, 2020
SCALE: AS NOTED

SHEET 137 OF 181

E500

pdf2013.pltcfg
2.0000 " / in.
began
6/2/2020 1:30:59 PM
T:\Projects\Brunswick_Regional_W&S_H2GO-3081\AB-Water_Supply&Treatment_Plant\Sheets\WTP\Electrical\RO Plant Elect Sheets.dgn

DocuSign Envelope ID: 8A858BC0-49BC-4FE5-96CE-7BD5CFB33DB7

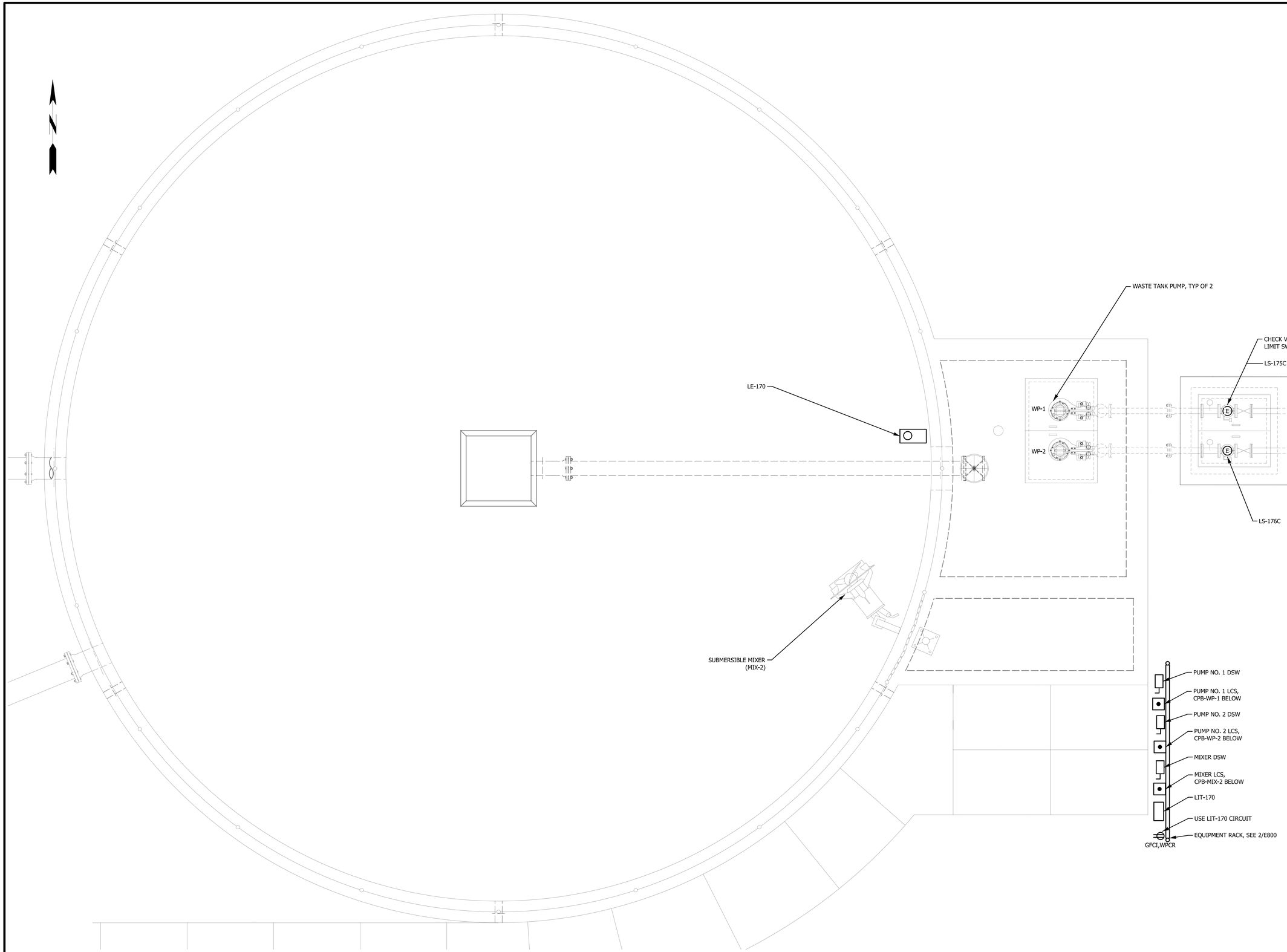

1 E600 BACKWASH STORAGE TANK
SCALE: 1/2"=1'-0"

2' 1' 0 2' 4' 6'
SCALE: 1/2" = 1'-0"

REVISIONS

THE WOOTEN COMPANY
120 North Boylan Avenue Raleigh, NC 27603-1423
919.828.0531 fax 919.834.3589
License Number: F-0115

BRUNSWICK REGIONAL WATER AND SEWER H2GO
BRUNSWICK COUNTY NORTH CAROLINA
CONTRACT No. 4
REVERSE OSMOSIS WATER TREATMENT PLANT
ELECTRICAL-BACKWASH STORAGE FACILITY
POWER PLAN

NORTH CAROLINA PROFESSIONAL 16765 ENGINEER ROBERT E. EGAN

DESIGNED BY:	JJS/REE
DRAWN BY:	PMD/EML
CHECKED BY:	REE
PROJECT NO.:	3081-AB
DATE:	JUNE 7, 2020
SCALE:	AS NOTED

SHEET 138 OF 181

E600

E600-Backwash Plan

pdf2013.pltcfg
2.0000 sf / in.
began
6/2/2020 1:31:00 PM
T:\Projects\Brunswick_Regional_W&S_H2GO-3081\AB-Water_Supply&Treatment_Plant\Sheets\WTP\Electrical\RO Plant Elect Sheets.dgn

DocuSign Envelope ID: 8A858BC0-49BC-4FE5-96CE-7BD5CFB33DB7

E700-Raw_Water_Vault

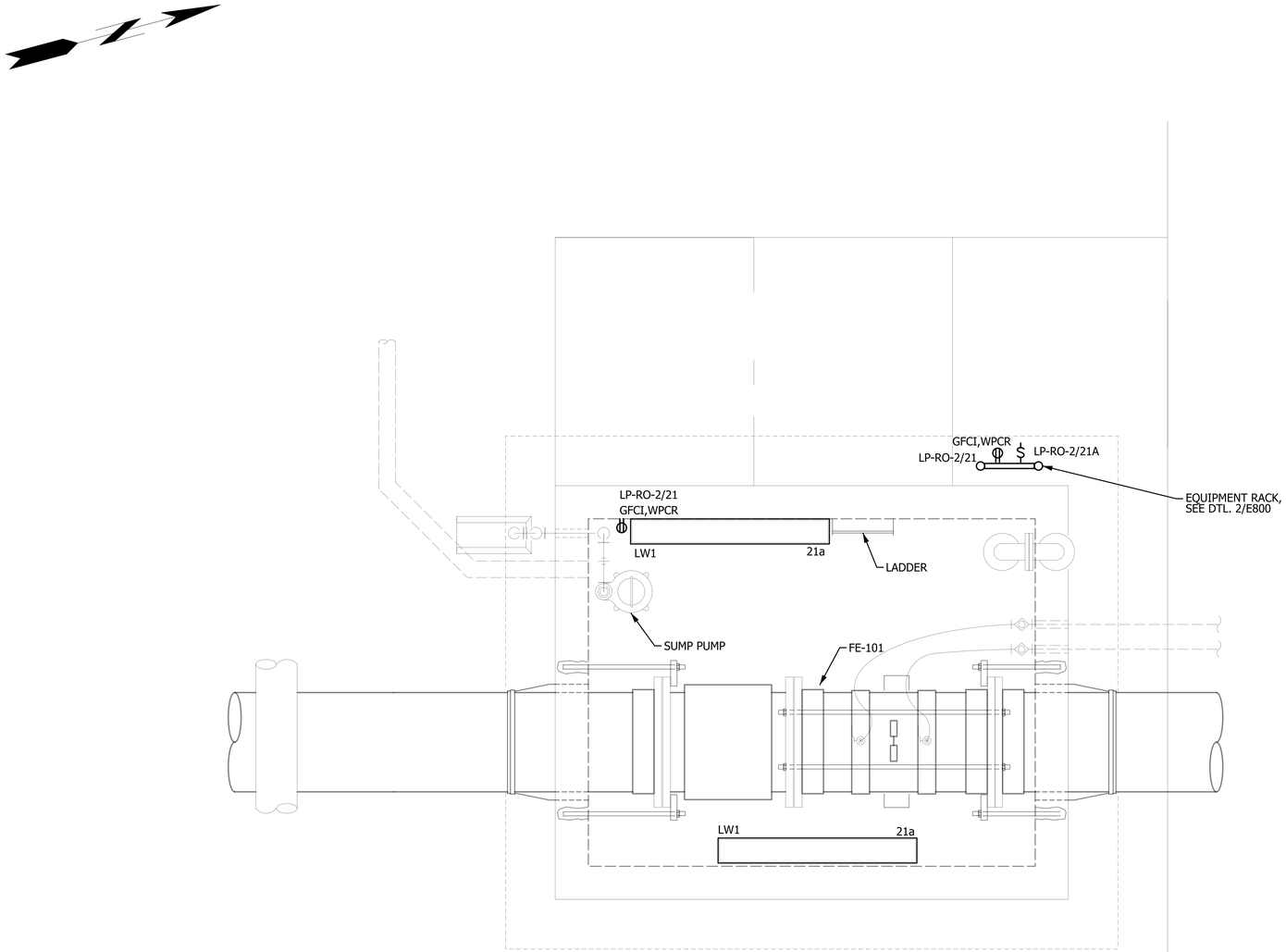

1 E700 ELECTRICAL - RAW WATER VAULT POWER & LIGHTING
SCALE: 3/4"=1'-0"

1' 0 1.33' 2.66' 4'
SCALE: 3/4" = 1'-0"

REVISIONS

THE WOOTEN COMPANY
120 North Boylan Avenue Raleigh, NC 27603-1423
919.828.0531 fax 919.834.3589
License Number: F-0115

BRUNSWICK REGIONAL WATER AND SEWER H2GO
BRUNSWICK COUNTY NORTH CAROLINA
CONTRACT No. 4
REVERSE OSMOSIS WATER TREATMENT PLANT
ELECTRICAL-RAW WATER VAULT POWER & LIGHTING PLAN

NORTH CAROLINA PROFESSIONAL ENGINEER 16765 ROBERT E. EGAN

DESIGNED BY: JJS/REE
DRAWN BY: PMD/EML
CHECKED BY: REE
PROJECT NO.: 3081-AB
DATE: JUNE 7, 2020
SCALE: AS NOTED

SHEET 139 OF 181

E700

pdf2013.pltcfg
1.3333 ' / in.
began
6/2/2020 1:31:00 PM
T:\Projects\Brunswick_Regional_W&S_H2GO-3081\AB-Water_Supply&Treatment_Plant\Sheets\WTP\Electrical\RO Plant Elect Sheets.dgn

DocuSign Envelope ID: 8A858BC0-49BC-4FE5-96CE-7BD5CFB33DB7

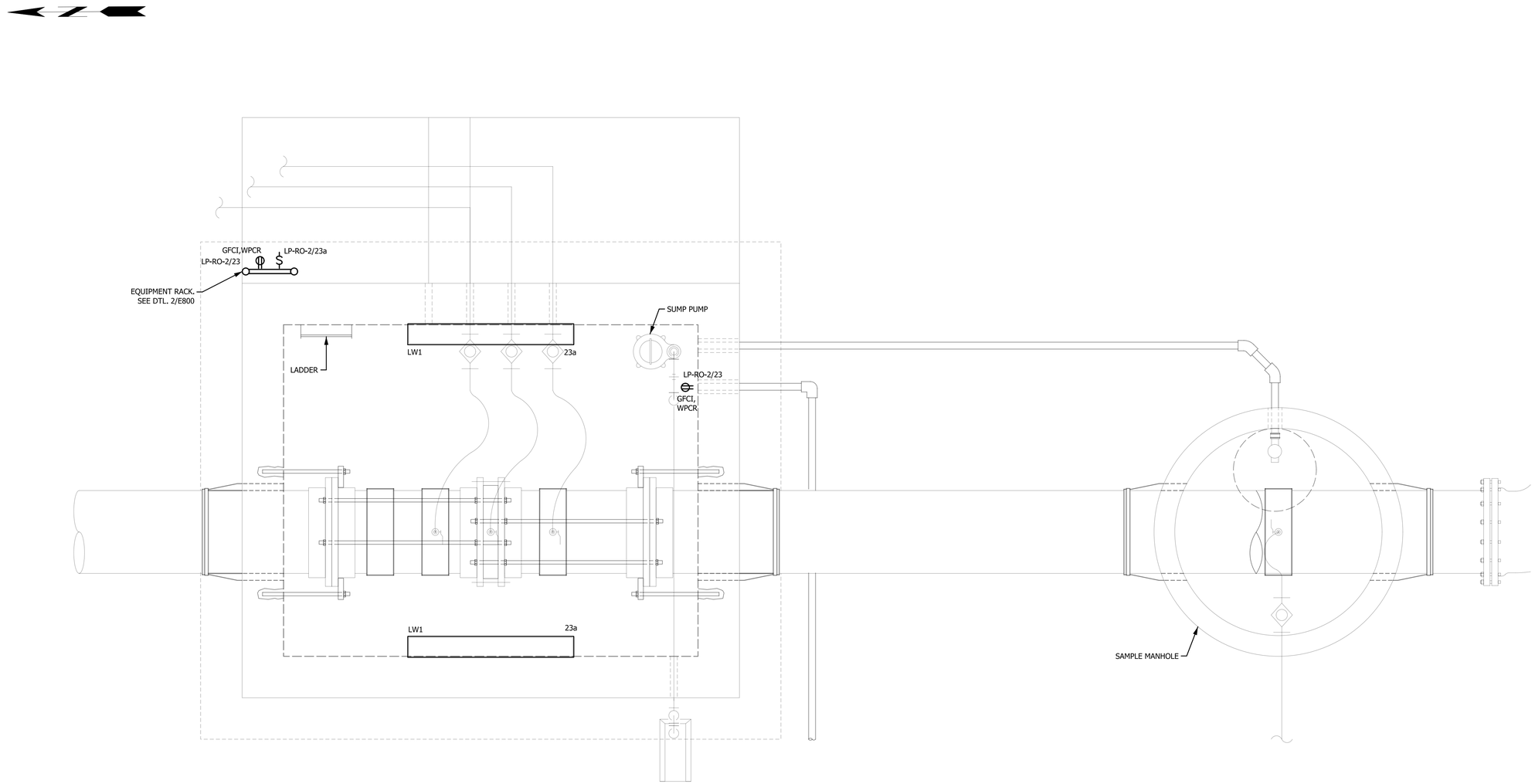

1 E710 ELECTRICAL - TREATED WATER VAULT POWER & LIGHTING PLAN
SCALE: 3/4" = 1'-0"

1' 0 1.33' 2.66' 4'
SCALE: 3/4" = 1'-0"

REVISIONS

THE WOOTEN COMPANY
120 North Boylan Avenue Raleigh, NC 27603-1423
919.828.0531 fax 919.834.3589
License Number: F-0115

BRUNSWICK REGIONAL WATER AND SEWER H2GO
BRUNSWICK COUNTY NORTH CAROLINA
CONTRACT No. 4
REVERSE OSMOSIS WATER TREATMENT PLANT
ELECTRICAL-TREATED WATER VAULT
POWER & LIGHTING PLAN

NORTH CAROLINA PROFESSIONAL ENGINEER 16765 DocuSigned by: ROBERT E. EGAN

DESIGNED BY:	JJS/REE
DRAWN BY:	PMD/EML
CHECKED BY:	REE
PROJECT NO.:	3081-AB
DATE:	JUNE 7, 2020
SCALE:	AS NOTED

SHEET 140 OF 181

E710

E710-Treated Water Vault

pdf2013.pltcfg
1.3333 sf / in.
began
6/2/2020 1:31:02 PM
T:\Projects\Brunswick_Regional_W&S_H2GO-3081\AB-Water_Supply&Treatment_Plant\Sheets\WTP\Electrical\RO Plant Elect Sheets.dgn

DocuSign Envelope ID: 8A858BC0-49BC-4FE5-96CE-7BD5CFB33DB7

E720-Finish_Water_Vault

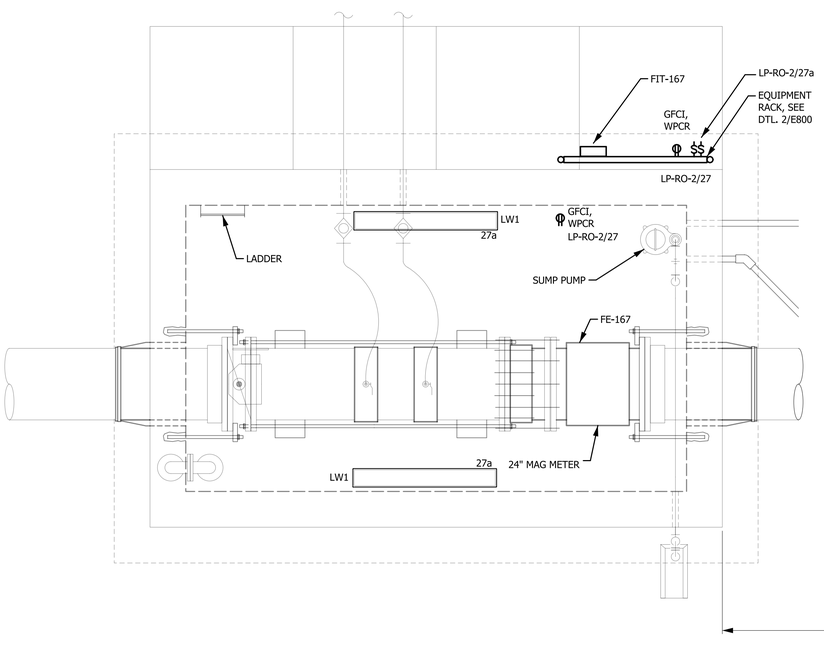

1 E720 ELECTRICAL-FINISHED WATER METER VAULT
SCALE: 1/2" = 1'-0"

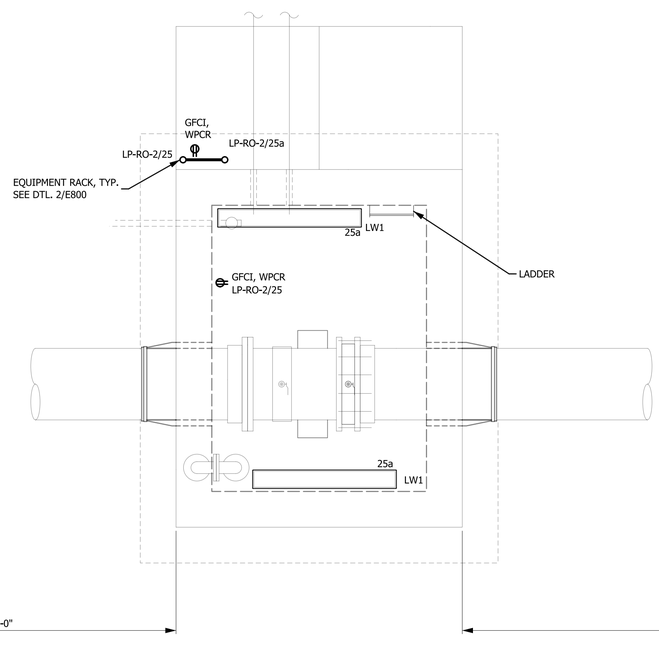

2 E720 ELECTRICAL - CHEMICAL FEED VAULT
SCALE: 1/2" = 1'-0"

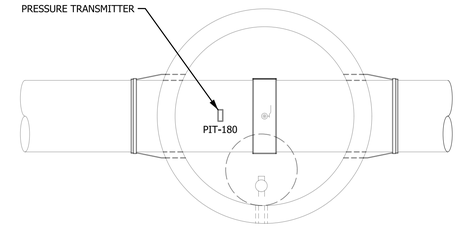

3 E720 ELECTRICAL - SAMPLE MANHOLE
SCALE: 1/2" = 1'-0"

2' 1' 0 2' 4' 6'
SCALE: 1/2" = 1'-0"

REVISIONS
6 / 05 / 2017

THE WOOTEN COMPANY
120 North Boylan Avenue Raleigh, NC 27603-1423
919.828.0531 Fax 919.834.3389
License Number: F-0115

BRUNSWICK REGIONAL WATER AND SEWER H2GO
BRUNSWICK COUNTY NORTH CAROLINA
CONTRACT No. 4
REVERSE OSMOSIS WATER TREATMENT PLANT
ELECTRICAL-FINISHED WATER VAULT POWER & LIGHTING PLAN

NORTH CAROLINA PROFESSIONAL ENGINEER SEAL 16765 DocuSigned ROBERT E. EGAN

DESIGNED BY: JJS/REE
DRAWN BY: PMD/EML
CHECKED BY: REE
PROJECT NO.: 3081-AB
DATE: JUNE 7, 2020
SCALE: AS NOTED

SHEET 141 OF 181

E720

pdf2013.pltcfg
2.0000 " / in.
began 1:31:02 PM
6/2/2020
T:\Projects\Brunswick_Regional_W&S_H2GO-3081\AB-Water_Supply&Treatment_Plant\Sheets\WTP\Electrical\RO Plant Elect Sheets.dgn

DocuSign Envelope ID: 8A858BC0-49BC-4FE5-96CE-7BD5CFB33DB7

E730-BFP Vault

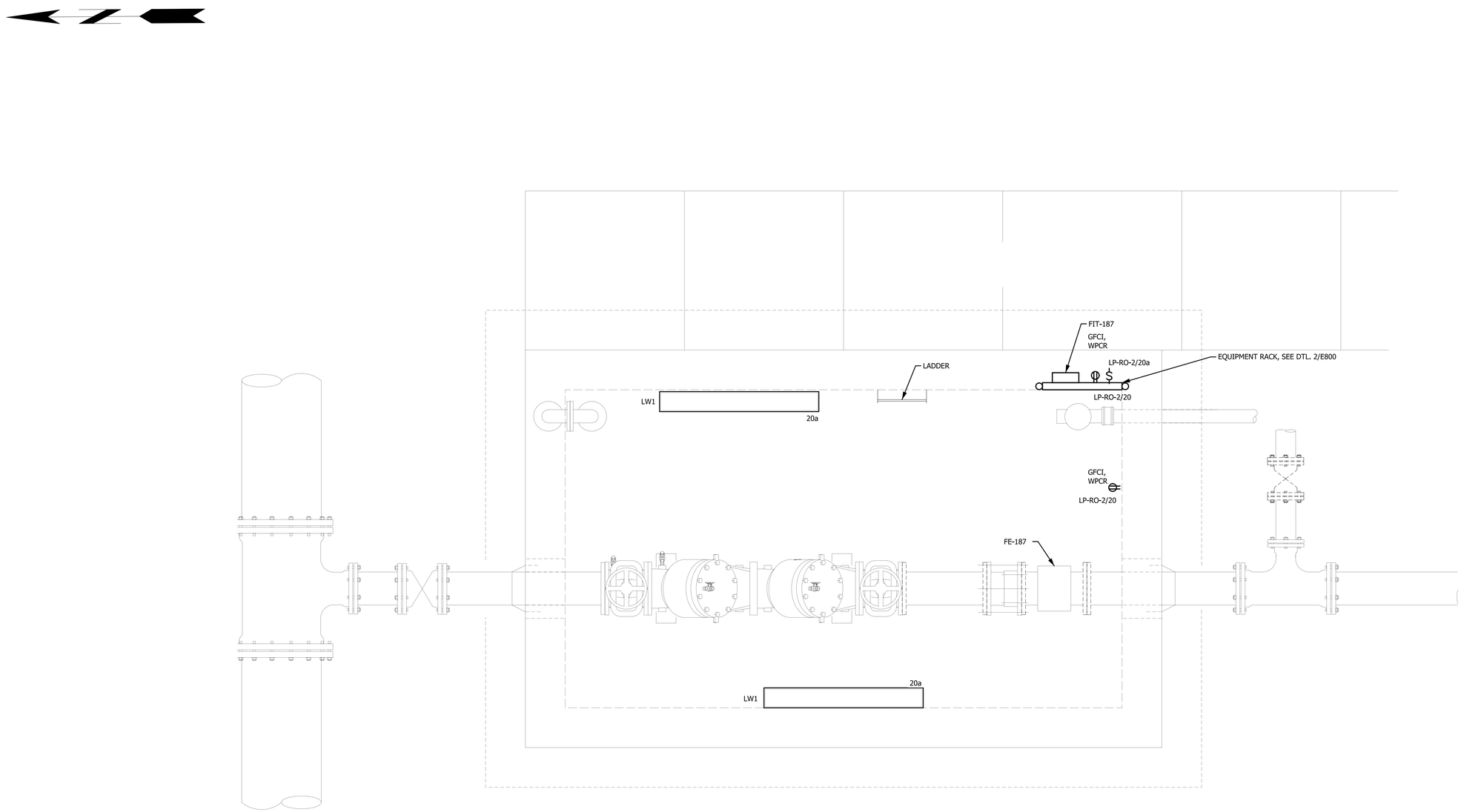

1 E730 ELECTRICAL-BACKFLOW PREVENTER VAULT POWER & LIGHTING PLAN

1' 0 1.33' 2.66' 4'
SCALE: 3/4" = 1'-0"

REVISIONS

THE WOOTEN COMPANY
120 North Boylan Avenue Raleigh, NC 27603-1423
919.828.0531 fax 919.834.3589
License Number: F-0115

BRUNSWICK REGIONAL WATER AND SEWER H2GO
BRUNSWICK COUNTY NORTH CAROLINA
CONTRACT No. 4
REVERSE OSMOSIS WATER TREATMENT PLANT
ELECTRICAL
BACKFLOW PREVENTER VAULT

NORTH CAROLINA PROFESSIONAL 16765 ENGINEER ROBERT E. EGAN

DESIGNED BY:	JJS/REE
DRAWN BY:	PMD/EML
CHECKED BY:	REE
PROJECT NO.:	3081-AB
DATE:	JUNE 7, 2020
SCALE:	AS NOTED

SHEET 142 OF 181

E730

pdf2013.pltcfg
1.3333 ' / in.
began
6/2/2020 1:31:02 PM
T:\Projects\Brunswick_Regional_W&S_H2GO-3081\AB-Water_Supply&Treatment_Plant\Sheets\WTP\Electrical\RO Plant Elect Sheets.dgn

DocuSign Envelope ID: 8A858BC0-49BC-4FE5-96CE-7BD5CFB33DB7

E740-Bypass Vault

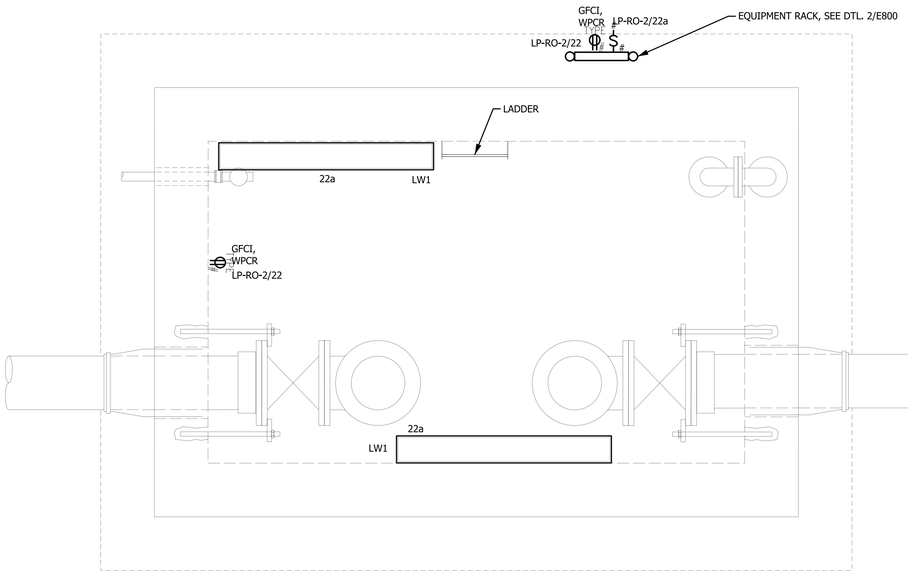

1 E740 ELECTRICAL-BYPASS VAULT POWER & LIGHTING PLAN

SCALE: 3/4" = 1'-0"

1' 0 1.33' 2.66' 4'

SCALE: 3/4" = 1'-0"

REVISIONS

THE WOOTEN COMPANY
120 North Boylan Avenue Raleigh, NC 27603-1423
919.828.0531 fax: 919.834.3589
License Number: F-0115

BRUNSWICK REGIONAL WATER AND SEWER H2GO
BRUNSWICK COUNTY NORTH CAROLINA

CONTRACT No. 4
REVERSE OSMOSIS WATER TREATMENT PLANT

ELECTRICAL
BYPASS VAULT POWER & LIGHTING PLAN

NORTH CAROLINA PROFESSIONAL 16765 ENGINEER ROBERT E. EGAN

DESIGNED BY:	JJS/REE
DRAWN BY:	PMD/EML
CHECKED BY:	REE
PROJECT NO.:	3081-AB
DATE:	JUNE 7, 2020
SCALE:	AS NOTED

SHEET 143 OF 181

E740

pdf2013.pltcfg
1.3333 ' / in.
began
6/2/2020 1:31:03 PM
T:\Projects\Brunswick_Regional_W&S_H2GO-3081\AB-Water_Supply&Treatment_Plant\Sheets\WTP\Electrical\RO Plant Elect Sheets.dgn

DocuSign Envelope ID: 8A858BC0-49BC-4FE5-96CE-7BD5CFB33DB7

E800_Details Sht1

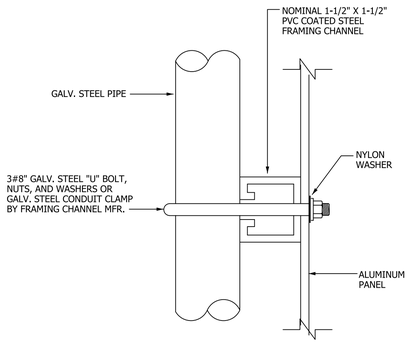

DETAIL A

(TYP. 3 LOCATIONS EACH POLE)

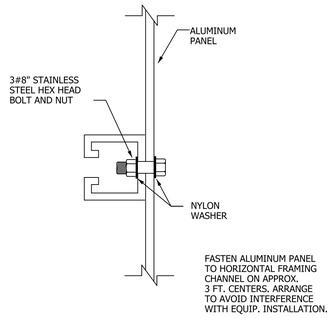

SECTION ①

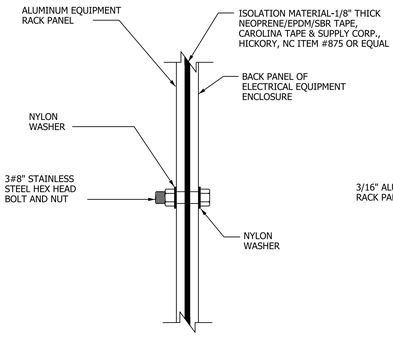

SECTION②

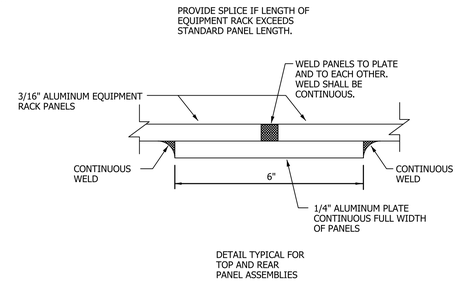

DETAIL TYPICAL FOR TOP AND REAR PANEL ASSEMBLIES

DETAIL B

REVISIONS

THE WOOTEN COMPANY
120 North Boylan Avenue Raleigh, NC 27603-1423
919.828.0531 Fax 919.834.5389
License Number: F-0115

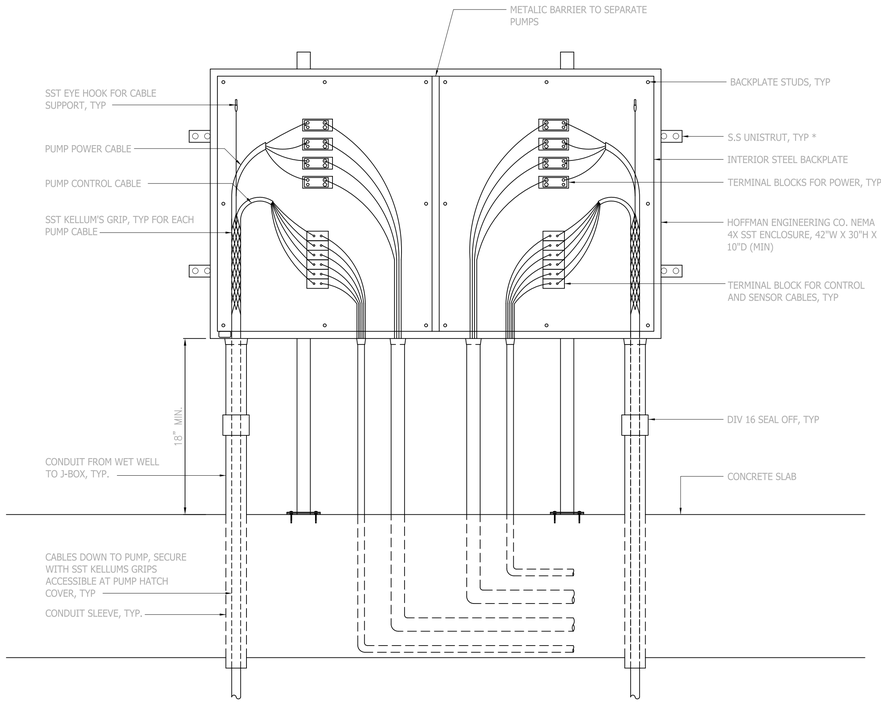

1 E800 TERMINAL CABINET WIRING DIAGRAM

NOT TO SCALE

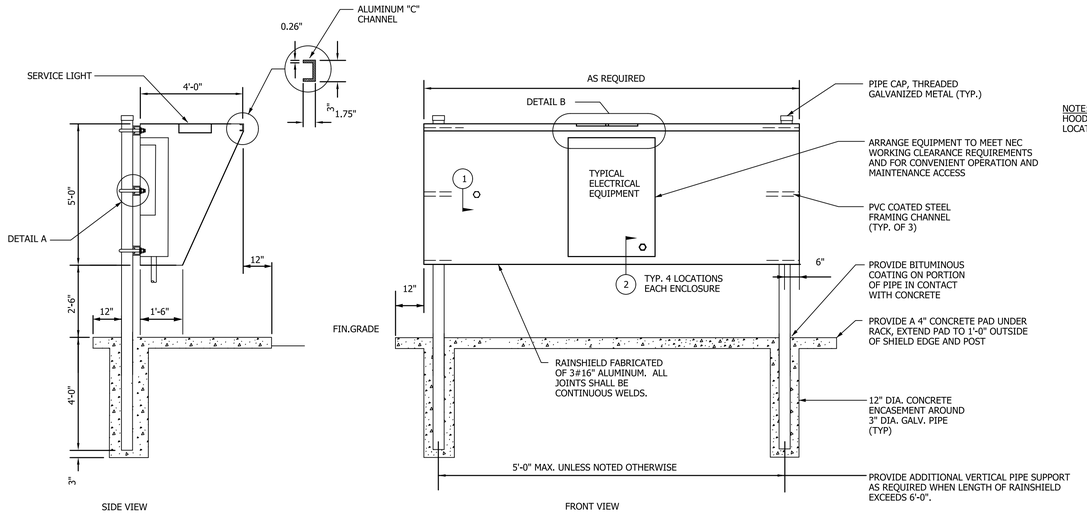

NOTE:
HOOD & LIGHT REQUIRED ONLY IN EXTERIOR LOCATIONS

2 E800 TYPICAL EQUIPMENT MOUNTING RACK DETAIL

NOT TO SCALE

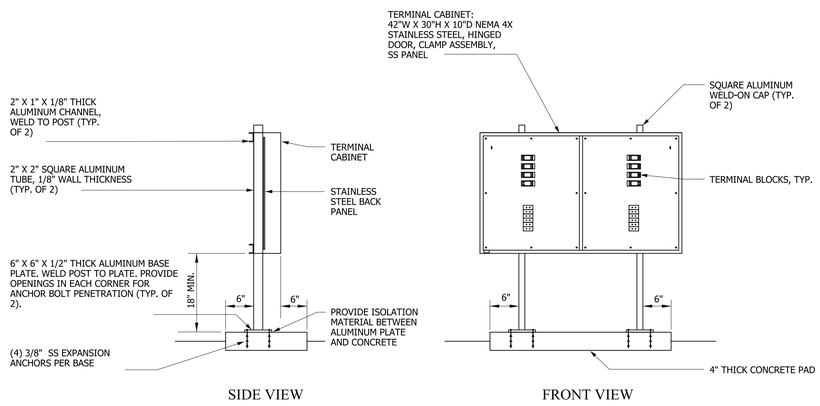

3 E800 TERMINAL CABINET DETAIL

NOT TO SCALE

BRUNSWICK REGIONAL WATER AND SEWER H2GO
BRUNSWICK COUNTY NORTH CAROLINA
CONTRACT No. 4
REVERSE OSMOSIS WATER TREATMENT PLANT
ELECTRICAL STANDARD DETAILS
SHEET NO. 4

NORTH CAROLINA PROFESSIONAL ENGINEER SEAL 16765 DocuSigned by: ROBERT E. EASLEY, JR. 6/2/2020

DESIGNED BY:	JJS/REE
DRAWN BY:	PMD/EML
CHECKED BY:	REE
PROJECT NO.:	3081-AB
DATE:	JUNE 7, 2020
SCALE:	AS NOTED

SHEET 144 OF 181

E800

pdf2013.pltcfg
39.9999 sf / in.
began 1:31:04 PM
6/2/2020
T:\Projects\Brunswick_Regional_W&S_H2GO-3081\AB-Water_Supply&Treatment_Plant\Sheets\WTP\Electrical\RO Plant Elect Sheets.dgn

DocuSign Envelope ID: 8A858BC0-49BC-4FE5-96CE-7BD5CFB33DB7

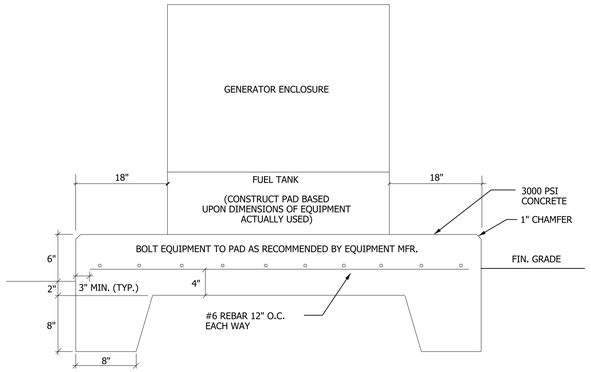

1 E801 GENERATOR PAD DETAIL

NOT TO SCALE

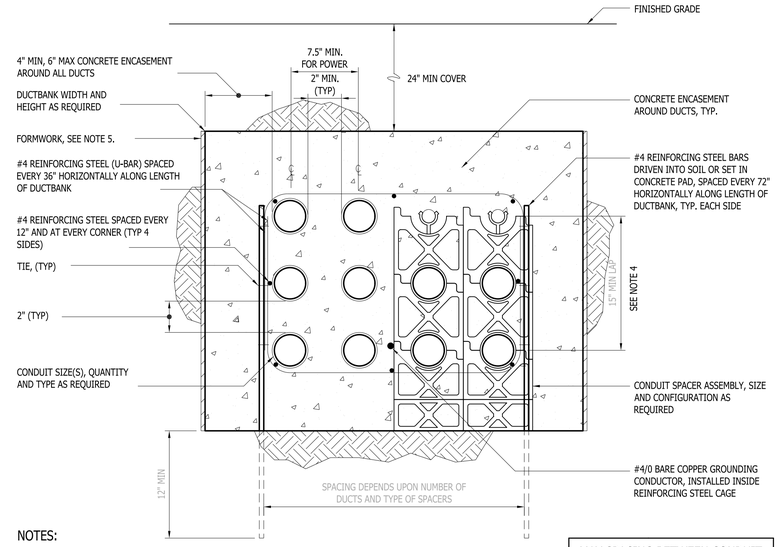

NOTES:

1. CONCRETE SHALL BE FURNISHED AND INSTALLED IN ACCORDANCE WITH SPECIFICATION SECTION 03100.
2. REINFORCING STEEL AND TIES SHALL BE FURNISHED AND INSTALLED IN ACCORDANCE WITH SPECIFICATION SECTION 03100. OVERLAP FOR REINFORCING STEEL SPLICES ALONG THE DUCTBANK LENGTH SHALL BE 15", MINIMUM.
3. CONDUIT SPACERS ARE REQUIRED IN ACCORDANCE WITH SPECIFICATION SECTION 16135. HORIZONTAL SPACING OF CONDUIT SPACER ASSEMBLIES ALONG LENGTH OF DUCTBANK SHALL AS SHOWN IN THE TABLE.
4. FOR DUCTBANKS LESS THAN 15" IN HEIGHT, THE LAP SHALL BE THE HEIGHT OF THE DUCTBANK.
5. IN POOR SOIL CONDITIONS, DUCTBANKS SHALL BE FORMED WITH FORMING MATERIALS TO MAINTAIN 4" MINIMUM ENCASEMENT. WHERE SOIL CONDITIONS PERMIT AND THE EXCAVATION IS MAINTAINED FOR A 4" MINIMUM TO 10" MAXIMUM ENCASEMENT, THE FORMWORK CAN BE OMITTED.

MAX SPACING BETWEEN CONDUIT SPACER ASSEMBLIES

CONDUIT SIZE	SPACING
1"	3 FT
1 1/4-2"	5 FT
2 1/2-3"	6 FT
3 1/2-5"	7 FT
6"	8 FT

2 E801 TYPICAL DUCTBANK DETAIL

NOT TO SCALE

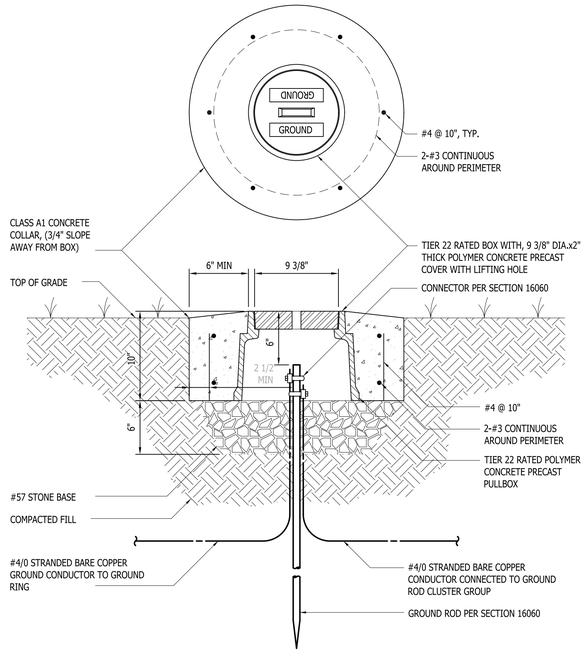

NOTES:

1. PRECAST PULLBOX AND COVER SHALL BE OLDCASTLE PART NUMBER 09101187, OR APPROVED EQUAL.

3 E801 GROUND ROD TEST WELL INSTALLATION

NOT TO SCALE

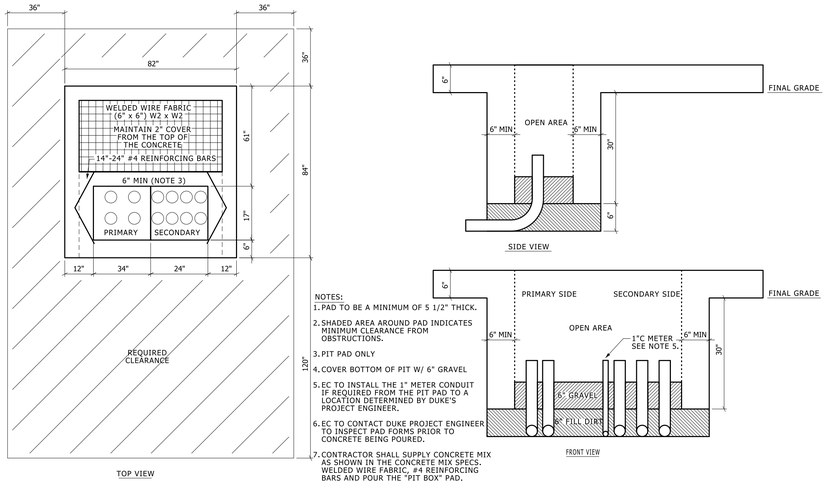

NOTES:

1. PAD TO BE A MINIMUM OF 5 1/2" THICK.
2. SHADED AREA AROUND PAD INDICATES MINIMUM CLEARANCE FROM OBSTRUCTIONS.
3. PIT PAD ONLY
4. COVER BOTTOM OF PIT W/ 6" GRAVEL
5. EC TO INSTALL THE 1" METER CONDUIT IF REQUIRED FROM THE PIT PAD TO A LOCATION DETERMINED BY DUKE'S PROJECT ENGINEER.
6. EC TO CONTACT DUKE PROJECT ENGINEER TO INSPECT PAD FORMS PRIOR TO CONCRETE BEING POURED.
7. CONTRACTOR SHALL SUPPLY CONCRETE MIX AS SHOWN IN THE CONCRETE MIX SPECS. WELDED WIRE FABRIC, #4 REINFORCING BARS AND POUR THE "PIT BOX" PAD.

4 E801 TRANSFOMER PAD DETAILS

NOT TO SCALE

REVISIONS

THE WOOTEN COMPANY
120 North Boylan Avenue Raleigh, NC 27603-1423
919.828.0531 Fax 919.834.5389
License Number: F-0115

BRUNSWICK REGIONAL WATER AND SEWER H2GO
BRUNSWICK COUNTY NORTH CAROLINA
CONTRACT No. 4
REVERSE OSMOSIS WATER TREATMENT PLANT
ELECTRICAL-STANDARD DETAILS
SHEET NO. 2

NORTH CAROLINA PROFESSIONAL ENGINEER SEAL 16765 DocuSigned by: ROBERT E. EGAN

DESIGNED BY:	JJS/REE
DRAWN BY:	PMD/EML
CHECKED BY:	REE
PROJECT NO.:	3081-AB
DATE:	JUNE 7, 2020
SCALE:	AS NOTED

SHEET 145 OF 181

E801

pdf2013.pltcfg
5.0000 sf / in.
began
1:31:05 PM
6/2/2020
T:\Projects\Brunswick_Regional_W&S_H2GO-3081\AB-Water_Supply&Treatment_Plant\Sheets\WTP\Electrical\RO Plant Elect Sheets.dgn

DocuSign Envelope ID: 8A858BC0-49BC-4FE5-96CE-7BD5CFB33DB7

1" X 30" ANCHOR BOLT LOCATION & EXACT BOLT SIZE TO BE ADJUSTED PER POLE MANUFACTURERS REQUIREMENTS.

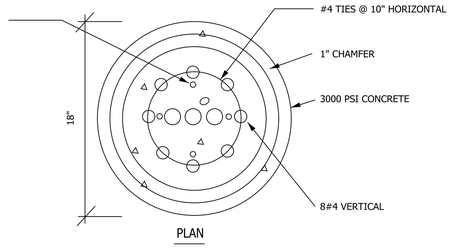

PLAN

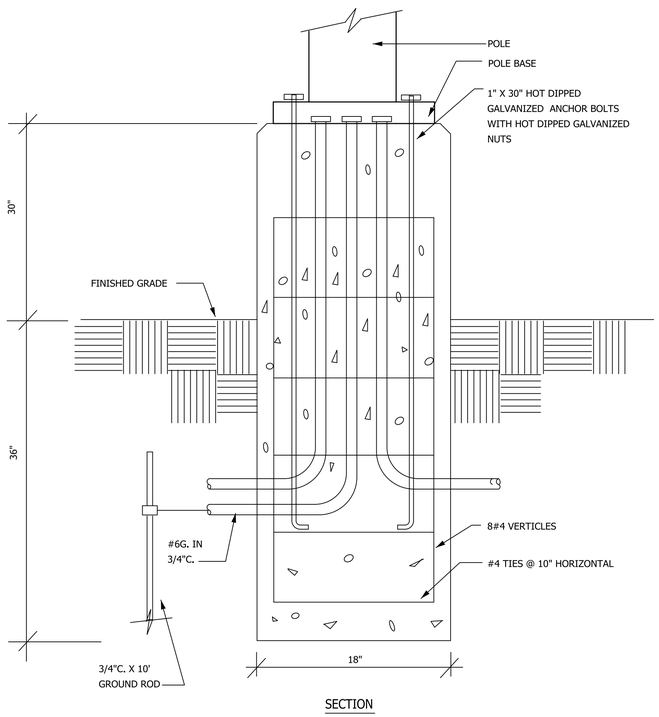

SECTION

4 RAISED POLE BASE DETAIL

4 / E802

NOT TO SCALE

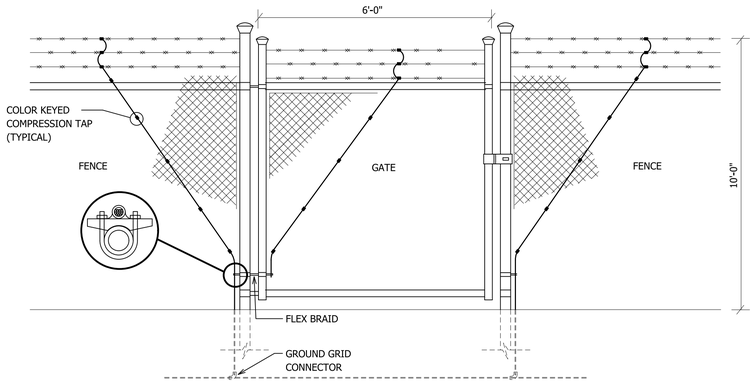

NOTES:
1. CONNECTORS INSTALLED FOR THE PURPOSE OF BONDING SECTIONS OF ROUND, SQUARE OR "H" CROSS-SECTION FENCE POSTS AND TOP RAILS OR FOR GROUNDING AND BONDING FENCE TO THE GROUND GRID SYSTEM SHALL BE OF THE 'KEEPER BAR' TYPE.

2. COMPRESSION CONNECTORS SHALL BE OF CAST COPPER CONSTRUCTION WITH MINIMUM CONDUCTIVITY OF 60% I.A.C.S.

3. 'U' BOLTS AND ASSOCIATED STEEL HARDWARE SHALL BE ZINC PLATED AND CHROMATE COATED TO RESIST CORROSION.

3 FENCE GROUNDING DETAIL

3 / E802

NOT TO SCALE

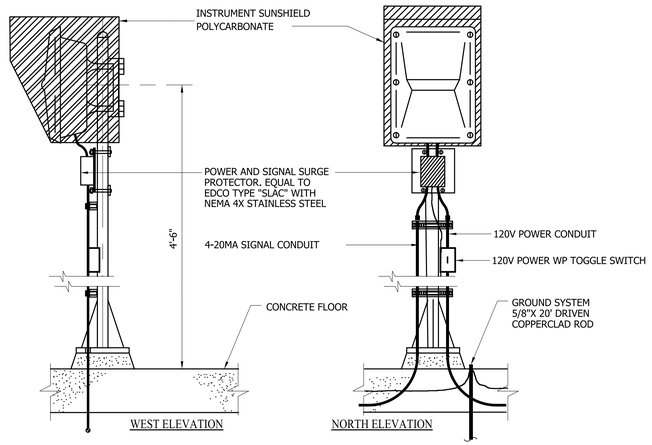

1 POWERED INSTRUMENT INSTALLATION

1 / E802

NOT TO SCALE

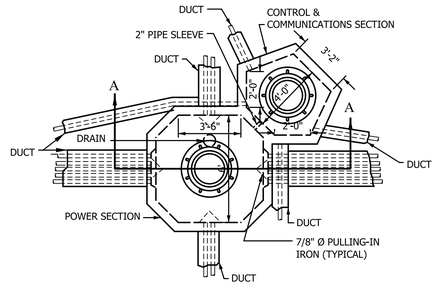

PLAN

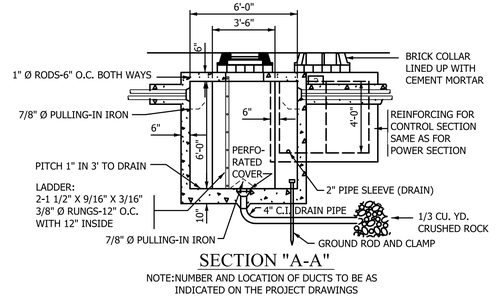

SECTION "A-A"

NOTE:NUMBER AND LOCATION OF DUCTS TO BE AS INDICATED ON THE PROJECT DRAWINGS

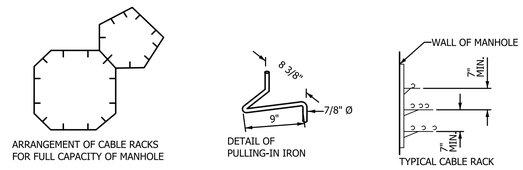

2 POWER & COMMUNICATION MANHOLE

2 / E802

NOT TO SCALE

REVISIONS

THE WOOTEN COMPANY
120 North Boylan Avenue Raleigh, NC 27603-1423
919.828.0531 Fax 919.834.5369
License Number: F-0113

BRUNSWICK REGIONAL WATER AND SEWER H2GO
BRUNSWICK COUNTY NORTH CAROLINA
CONTRACT No. 4
REVERSE OSMOSIS WATER TREATMENT PLANT
ELECTRICAL-STANDARD DETAILS
SHEET NO. 3

NORTH CAROLINA PROFESSIONAL ENGINEER 16765 DocuSigned by: ROBERT E. CAMPBELL

DESIGNED BY:	JJS/REE
DRAWN BY:	PMD/EML
CHECKED BY:	REE
PROJECT NO.:	3081-AB
DATE:	JUNE 7, 2020
SCALE:	AS NOTED

SHEET 146 OF 181

E802

pdf2013.pltcfg
5.0000 sf / in.
began
1:31:06 PM
6/2/2020
T:\Projects\Brunswick_Regional_W&S_H2GO-3081\AB-Water_Supply&Treatment_Plant\Sheets\WTP\Electrical\RO Plant Elect Sheets.dgn

DocuSign Envelope ID: 8A858BC0-49BC-4FE5-96CE-7BD5CFB33DB7

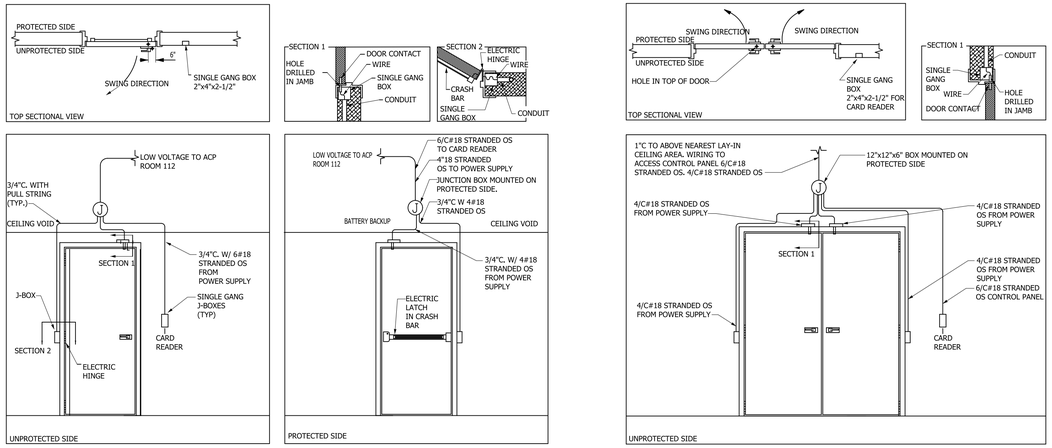

SINGLE DOORS DOUBLE DOORS

1 / E803 ELECTRICAL ROUGH-IN FOR CARD ACCESS
NOT TO SCALE

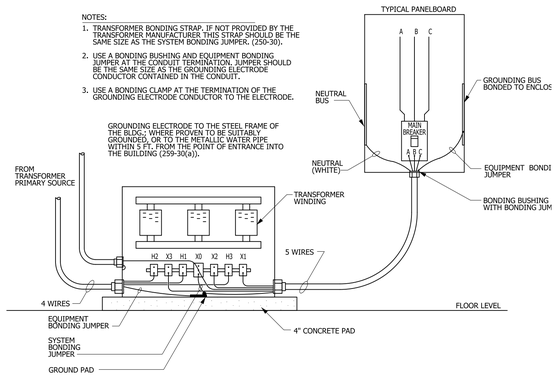

2 / E803 DRY TRANSFORMER BONDING SCHEMATIC
NOT TO SCALE

4 / E803 TELEPHONE/DATA CONNECTION DIAGRAM
NOT TO SCALE

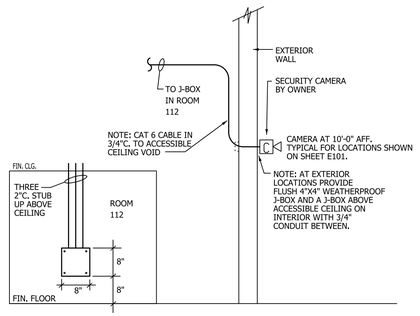

5 / E803 SECURITY CAMERA WIRING DIAGRAM
NOT TO SCALE

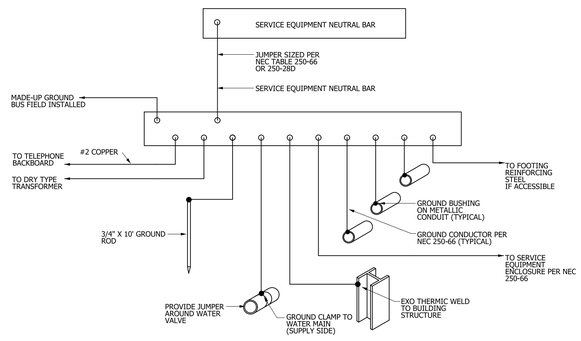

3 / E803 SERVICE BONDING SCHEMATIC
NOT TO SCALE

REVISIONS

THE WOOTEN COMPANY
120 North Boylan Avenue Raleigh, NC 27603-1423
919.828.0531 Fax 919.834.5369
License Number: F-0115

BRUNSWICK REGIONAL WATER AND SEWER H2GO
BRUNSWICK COUNTY NORTH CAROLINA
CONTRACT No. 4
REVERSE OSMOSIS WATER TREATMENT PLANT
ELECTRICAL-STANDARD DETAILS
SHEET NO. 4

NORTH CAROLINA PROFESSIONAL ENGINEER SEAL 16765 ROBERT E. EDWARDS Registered Professional Engineer

DESIGNED BY:	JJS/REE
DRAWN BY:	PMD/EML
CHECKED BY:	REE
PROJECT NO.:	3081-AB
DATE:	JUNE 7, 2020
SCALE:	AS NOTED

SHEET 147 OF 181

E803

pdf2013.pltcfg
10.0000 ' / in.
began
6/2/2020 1:31:07 PM
T:\Projects\Brunswick_Regional_W&S_H2GO-3081\AB-Water_Supply&Treatment_Plant\Sheets\WTP\Electrical\RO Plant Elect Sheets.dgn

CONTRACT

GENERAL INSTRUMENT SYMBOLS

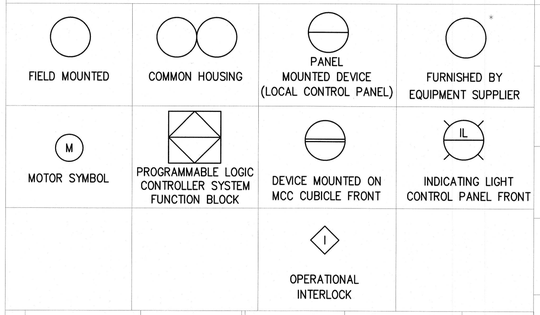

	INITIATING VARIABLE	MODIFIER	PASSIVE FUNCTION	FUNCTION	MODIFIER
A	ANALYSIS		ALARM		
B	BURNER, COMBUSTION	BLOWER	USER'S CHOICE	USER'S CHOICE	USER'S CHOICE
C				CONTROL	CLOSE/CLOSED
D		DIFFERENTIAL			
E	VOLTAGE		SENSOR (PRIMARY ELEMENT)		
F	FLOW RATE	RATIO (FRACTION)	FAULT (FAIL)		
G	GAUGE		GLASS, VIEWING DEVICE		
H	HAND				HIGH
I	CURRENT (ELECTRICAL)		INDICATE OR PLC/DCS ANALOG INPUT		
J	POWER	SCAN			
K	TIME, TIME SCHEDULE	TIME RATE OF CHANGE		CONTROL STATION	
L	LEVEL		LIGHT		LOW
M	MOTOR	MOMENTARY			MIDDLE, INTERMEDIATE
N	TORQUE		NOTIFY OR PLC/DCS DISCREET INPUT		
O			ORIFICE, RESTRICTION		OPEN/OPENED
P	PRESSURE, VACUUM		POINT (TEST) CONNECTION		
Q	QUANTITY	INTEGRATE, TOTALIZE			
R	RUN		RECORD & STORE	REPORT	
S	SPEED, FREQUENCY	SAFETY		SWITCH	
T	TEMPERATURE			TRANSMIT	
U	MULTIVARIABLE		MULTIFUNCTION	MULTIFUNCTION	MULTIFUNCTION
V	VIBRATION, VOLUME MECHANICAL ANALYSIS			VALVE, DAMPER, LOUVER	
W	WEIGHT, FORCE		WELL		
X	FAILURE OR TROUBLE	X AXIS			
Y	EVENT, STATE OR PRESENCE	Y AXIS		COMPUTE, CONVERT, RELAY	
Z	POSITION, DIMENSION	Z AXIS		DRIVER, ACTUATOR, FINAL CONTROL ELEMENT	

LINE SYMBOLS AND LEGEND

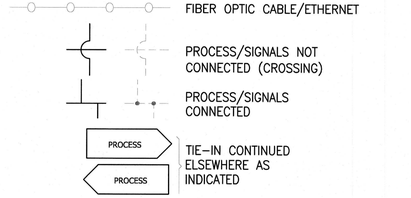

EQUIPMENT TAG NUMBERS

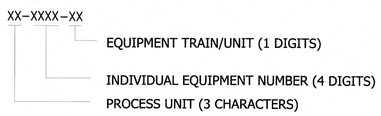

NOTES

1. SYMBOLS AND NOMENCLATURE ARE BASED ON ISA STANDARDS S5.1, S5.2, S5.4.
2. SEE ASSOCIATED ELECTRICAL AND MECHANICAL SYMBOL SHEETS FOR ADDITIONAL SYMBOLS AND ABBREVIATIONS.
3. POWER SUPPLIES FOR LOOPS OR SYSTEMS SHALL BE FURNISHED BY THE INSTRUMENTATION SUPPLIER TO MEET THE PARTICULAR CHARACTERISTICS (E.G. VOLTAGE AND CURRENT REQUIREMENTS) OF COMPONENTS IN EACH LOOP OR SYSTEM.
4. UNDERSCORE(S) REQUIRED FOR ALL EQUIPMENT TYPES LESS THAN FOUR CHARACTERS.

VALVE SYMBOLS

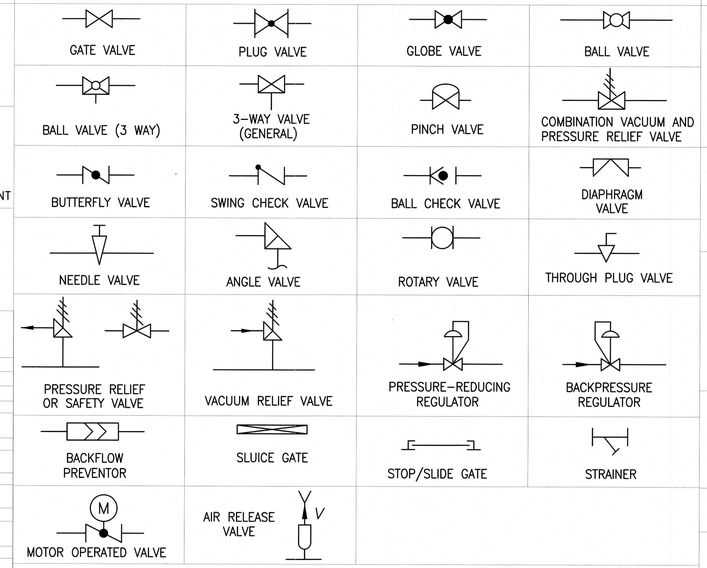

FLOW METERS

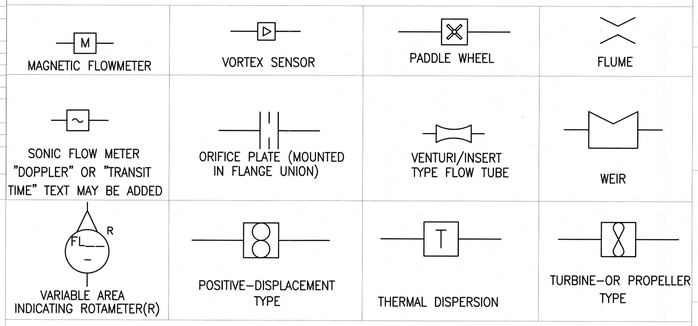

VALVE ACTUATORS

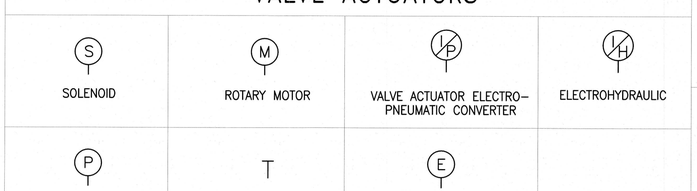

PUMP AND COMPRESSOR SYMBOLS

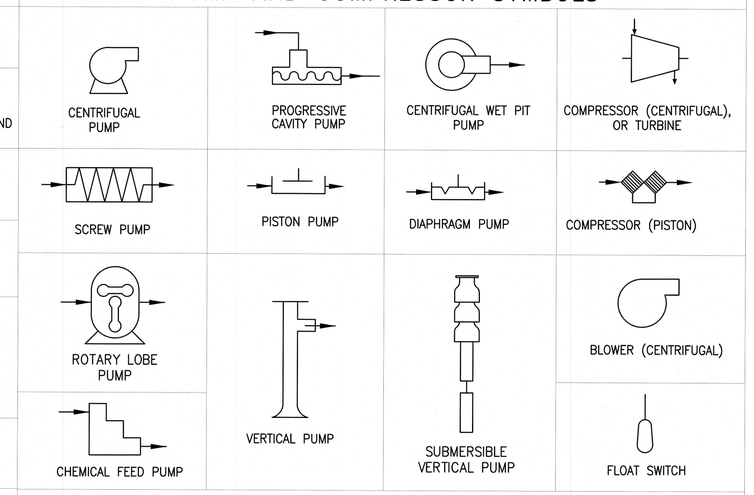

MISCELLANEOUS SYMBOLS

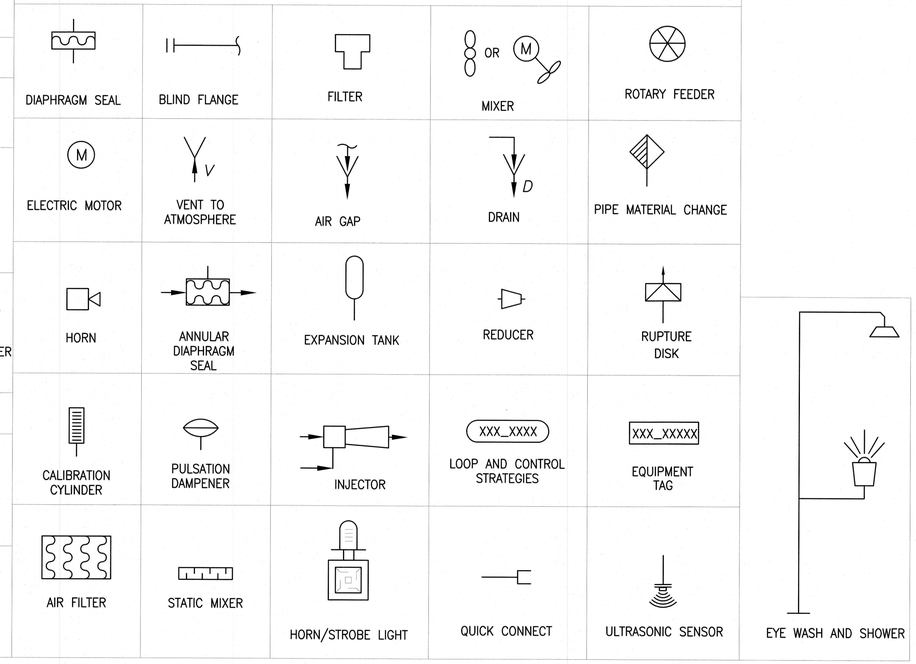

REVISIONS

THE WOOTEN COMPANY
120 North Boylan Avenue Raleigh, NC 27603-1423
919.828.0331 fax 919.834.3589
License Number: F-0115

BRUNSWICK REGIONAL WATER AND SEWER H2GO
BRUNSWICK COUNTY NORTH CAROLINA
CONTRACT No. 4
REVERSE OSMOSIS WATER TREATMENT PLANT
SYMBOLOGY LEGEND

NORTH CAROLINA PROFESSIONAL SEAL 12531 ENGINEER CHARLES W. DAVIS
7-JUNE-20

DESIGNED BY:	CWD
DRAWN BY:	PMD/EML
CHECKED BY:	CWD
PROJECT NO.:	3081-AB
DATE:	JUNE 7, 2020
SCALE:	AS NOTED

SHEET 148 OF 181

I100

Print2PDFx.plt
0.75 / in.
pdonaghy
6/5/2020 8:37:34 AM
T:\Projects\Brunswick_Regional_W&S_H2GO-3081\AB-Water_Supply&Treatment_Plant\Sheets\WTP\I100_P&ID symbology.dgn

Print2PDFx.plt
2:8 ':" / in.
pdonaghy
6/5/2020 8:38:11 AM
T:\Projects\Brunswick_Regional_W&S_H2GO-3081\AB-Water_Supply&Treatment_Plant\Sheets\WTP\I101_wells.dgn
Default

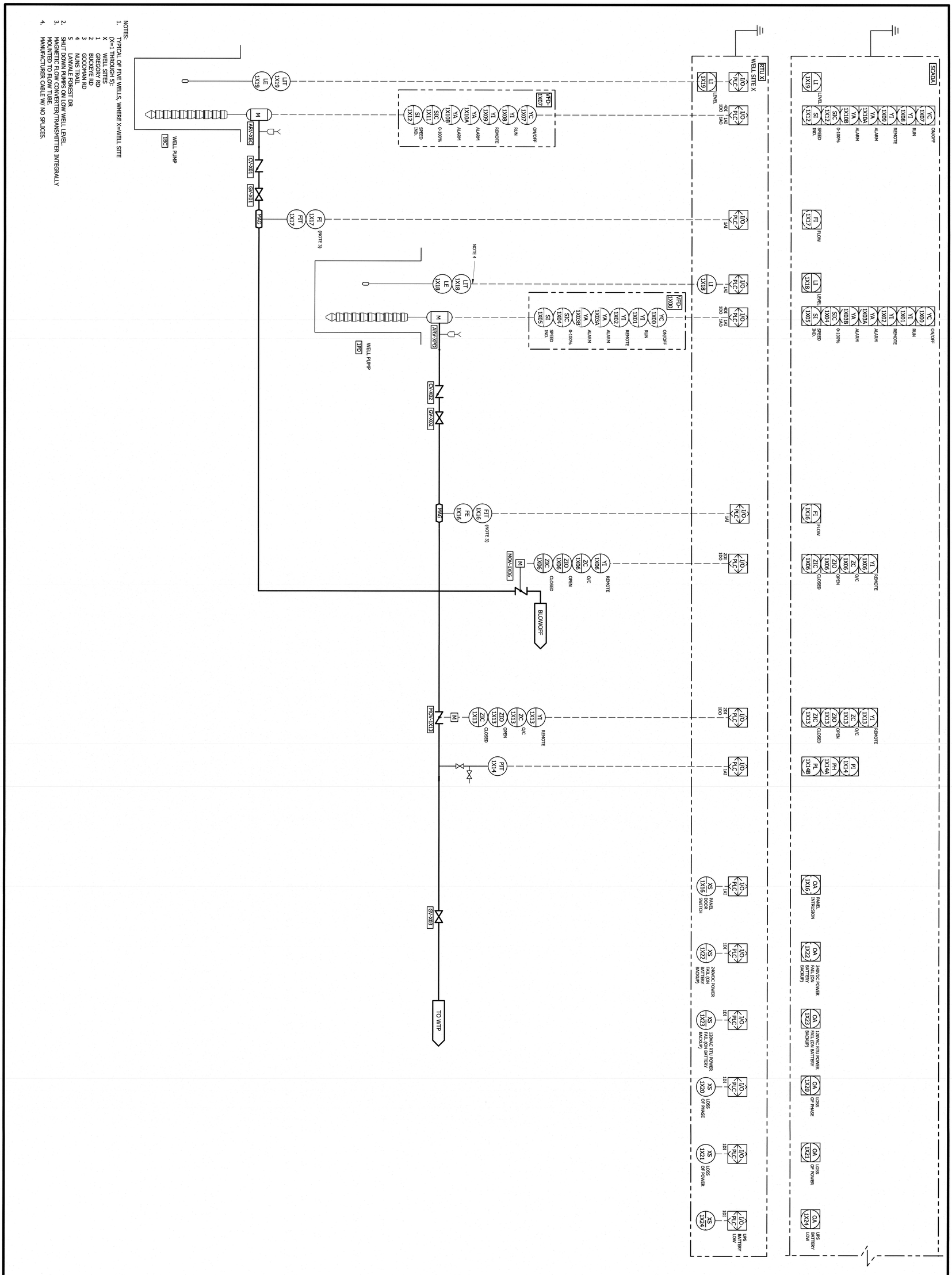

BRUNSWICK REGIONAL WATER AND SEWER H2GO
BRUNSWICK COUNTY NORTH CAROLINA

CONTRACT No. 4
REVERSE OSMOSIS WATER TREATMENT PLANT

OFF SITE WATER SUPPLY WELLS-P & ID

THE WOOTEN COMPANY
120 North Boylan Avenue Raleigh NC 27603-1423
919.828.0531 fax 919.834.3589
License Number: F-0115

REVISIONS

DESIGNED BY: CWD
DRAWN BY: PMD/EML
CHECKED BY: CWD
PROJECT NO.: 3081-AB
DATE: JUNE 7, 2020
SCALE: AS NOTED

SHEET 149 OF 181
I101

Default

SCADA

PLC-1

RAW WATER PANEL

OIT
RO TRAIN X

PLC-2-X

VFD

MCC-RO

RWSP-1

ROFP-1

** NOTE: RO TRAIN 2 SIMILAR

* NOTE: SEE CLEANING P&ID

FROM WELLS

SCALE INHIBITOR

CF101

CF102

CF103 FUTURE

CF104 FUTURE

TO RO TRAIN 2, FUTURE TRAINS 3,4

FROM FLUSH SYSTEM

FEED WATER BYPASS TO WASTE

CONCENTRATE FROM OTHER RO TRAINS

STAGE 1

STAGE 2

ERD1

COMBINED PERMEATE INSTRUMENT PANEL

PERMEATE TO POST TREATMENT

PERMEATE FLUSH TANK

FROM RO TRAIN 2, FUTURE TRAINS 3,4

COMBINED CONCENTRATE INSTRUMENT PANEL

COMBINATION ARV

CONCENTRATE TO DISPOSAL

FLOAT SWITCH (TRENCH SUMP PUMP) HIGH LEVEL

REVISIONS

THE WOOTEN COMPANY
120 North Boylan Avenue Raleigh, NC 27603-1423
919.828.0531 FAX 919.834.5089
Licenses Number: F-0115

BRUNSWICK REGIONAL WATER AND SEWER H2GO
BRUNSWICK COUNTY NORTH CAROLINA
CONTRACT No. 4
REVERSE OSMOSIS WATER TREATMENT PLANT
RO PROCESS P & ID

NORTH CAROLINA PROFESSIONAL SEAL 22531 ENGINEER CHARLES W. DAVIS
7-JUNE-20

DESIGNED BY:	CWD
DRAWN BY:	PMD/EML
CHECKED BY:	CWD
PROJECT NO.:	3081-AB
DATE:	JUNE 7, 2020
SCALE:	AS NOTED

SHEET 150 OF 181

I102

Print2PDFx.plt
2:8 " / in.
pdonaghy
6/5/2020 8:39:09 AM
T:\Projects\Brunswick_Regional_W&S_H2GO-3081\AB-Water_Supply&Treatment_Plant\Sheets\WTP\I102_RO process.dgn

24x36

SCADA

PERMEATE FILL VALVE
PERMEATE TANK LEVEL
RO FLUSH PUMPS
CLEANING PUMP

YI 112 REMOTE
ZC 112 O/C
ZIC 112 CLOSED
ZIO 112 OPEN
LI 111 LEVEL

YC 113-1 O/C
YI 113-1 RUN
YI 113A-1 REMOTE
YI 113B-1 ALARM
YC 113-2 O/C
YI 113-2 RUN
YI 113A-2 REMOTE
YI 113B-2 ALARM
YA 113-2 ALARM

YA 122 PRES.
YI 123 RUN
YI 123A REMOTE
YI 123B ALARM
YA 123 SPEED INDICATE
SI 123

AI 124 pH/ TEMP
FI 125 FLOW
DPI 127
YA 181 ALARM

PLC-1

I/O PLC 3DI 1DO
I/O PLC 1AI
I/O PLC 2DI 1DO
I/O PLC 6DI 2DO
I10 PLC 4DI 2DO 1AI 1AO
I/O PLC 1AI
I/O PLC 1AI
I/O PLC 1AI
I/O PLC 10I

MCC-RO

YC 135
YI 136
YA 137
YC 113-1
YI 113A-1
YI 113B-1
YA 113-1
YC 113-2
YI 113A-1
YI 113B-1
YA 113-1
YC 123
YI 123A
YI 123B
YI 123C
YA 123
SIC 123
SI 123

HSL-181

PERMEATE FILL FROM PERMEATE HEADER

YI 112
ZIO 112
ZIC 112
ZC 112
M
MOV-112

LIT 111
LE 111

FLUSH TANK

FLP-1
FLP-2

PERMEATE FLUSH SUPPLY TO RO TRAINS

IMMERSION HEATER CONTROL PANEL

YI 123C
HS 123
SIC 123
SI 123
LOCAL CONTROL STATION

CLEANING SOLUTION INSTRUMENT PANEL

AIT 124 pH/ TEMP
FIT 125 FLOW
AE 124
FE 125

POTABLE WATER
FS 181
EES-2

PERMEATE CLEANING RETURN FROM RO TRAIN

8" CLEANING RETURN FROM RO TRAINS

6" CLEANING RECIRCULATION FOR MIXING

LG
TC
CLEANING TANK
CP-1
CLEANING PUMP
PSH 122

VENT
CF-105 T
2"DRAIN

DPIT 127
DPI 127

8" CLEANING DELIVERY TO RO TRAINS

HS 135
LOCAL CONTROL STATION

LG
SPENT CLEANING SOLUTION TANK

6" PIPE TO DISPOSAL

RINSE STORAGE TANK

REVISIONS

THE WOOTEN COMPANY
120 North Boylan Avenue Raleigh NC 27603-1423
919.828.0531 fax 919.834.3589
License Number: F-0115

BRUNSWICK REGIONAL WATER AND SEWER H2GO
BRUNSWICK COUNTY NORTH CAROLINA
CONTRACT No 4
REVERSE OSMOSIS WATER TREATMENT PLANT
CLEAN & FLUSH SYSTEM - P & ID

NORTH CAROLINA PROFESSIONAL ENGINEER SEAL 25237 CHARLES W. DAVIS
1-JUNE-20

DESIGNED BY: CWD
DRAWN BY: PMD/EML
CHECKED BY: CWD
PROJECT NO.: 3081-AB
DATE: JUNE 7, 2020
SCALE: AS NOTED

SHEET 151 OF 181

I103

Print2PDFx.plt
8.0000 * / in.
pdonaghy
6/5/2020 8:39:49 AM
T:\Projects\Brunswick_Regional_W&S_H2GO-3081\AB-Water_Supply&Treatment_Plant\Sheets\WTP\I103_CLEANANDFLUSH.dgn

Print2PDFx.plt
3.0000 ' / in.
pdonaghy
6/5/2020 8:41:12 AM
T:\Projects\Brunswick_Regional_W&S_H2GO-3081\AB-Water_Supply&Treatment_Plant\Sheets\WTP\I104_PID Hypochlorite.dgn
Default

DESIGNED BY:	CWD
DRAWN BY:	PMD/EML
CHECKED BY:	CWD
PROJECT NO.:	3081-AB
DATE:	JUNE 7, 2020
SCALE:	AS NOTED

SHEET 152 OF 181

I104

BRUNSWICK REGIONAL WATER AND SEWER H2GO
BRUNSWICK COUNTY NORTH CAROLINA

CONTRACT No 4
REVERSE OSMOSIS WATER TREATMENT PLANT

ON-SITE SODIUM HYPOCHLORITE GENERATION SYSTEM - P & ID

THE WOOTEN COMPANY
120 North Boylan Avenue Raleigh NC 27603-1423
919.828.0531 fax 919.834.3589
License Number: F-0115

REVISIONS

Default

SCADA

PLC-1

YA 183 — ALARM

YA 151 — ALARM
YA 152 — ALARM

YC 153 — ON/OFF
YI 154 — RUN STATUS
YA 156 — ALARM
YA 157 — ALARM
YA 158 — ALARM
AO 437 — pH

YA 159 — ALARM
AI 160 — CO2 LEVEL

YA 180 — ALARM

YA 186 — ALARM
YC 194 — O/C
YC 193 — O/C
AI 179A — pH
AI 179B — Cl2 RESID.

I/O PLC 1DI
I/O PLC 2DI
I/O PLC 4DI 1AO 1DO
I/O PLC 1DI
I/O PLC 1AI
I/O PLC 1DI
I/O PLC 1DI
I/O PLC 1DO
I/O PLC 1DO
I/O PLC 2AI

HSL-183
HSL-180
HSL-186

POTABLE WATER — FS 183 — EES-4
POTABLE WATER — FS 180 — EES-1
POTABLE WATER — FS 186 — EES-7

YA 151
YA 152

YC 153
YA 154
YA 156
YA 157
YI 158
AO 437

YA 159 — ALARM PANEL
AI 160 — CO_2 DETECTOR

PI

CO_2 GAS

PRESSURE SOLUTION FEED PANEL

PLANT WATER

C02 STORAGE TANK
T-301

PERMEATE FROM RO TRAINS

FLOW

PERMEATE TO CALCITE FILTERS

PRE-CALCITE INSTRUMENT PANEL

AIT 179 — pH
AE 179A — pH
AE 179B — Cl2 RESID.

S SV-194
S SV-193

REVISIONS

THE WOOTEN COMPANY
120 North Boylan Avenue Raleigh NC 27603-1423
919.828.0531 fax 919.834.3589
License# Number: F-0116

BRUNSWICK REGIONAL WATER AND SEWER H2GO
BRUNSWICK COUNTY NORTH CAROLINA

CONTRACT No 4
REVERSE OSMOSIS WATER TREATMENT PLANT

CO2 STORAGE/FEED SYSTEM
P & ID

NORTH CAROLINA PROFESSIONAL SEAL 22531 ENGINEER CHARLES W. DAVIS
7-14-20

DESIGNED BY: CWD
DRAWN BY: PMD/EML
CHECKED BY: CWD
PROJECT NO.: 3081-AB
DATE: JUNE 7, 2020
SCALE: AS NOTED

SHEET 153 OF 181

I105

Print2PDFx.plt
3.0000 " / in.
pdonaghy
6/5/2020 8:42:13 AM
T:\Projects\Brunswick_Regional_W&S_H2CO-3081\AB-Water_Supply&Treatment_Plant Sheets\WTP\I105_CO2.dgn

Print2PDFx.plt
2:8 ':' / in.
pdonaghy
6/5/2020 8:44:02 AM
T:\Projects\Brunswick_Regional_W&S_H2GO-3081\AB-Water_Supply&Treatment_Plant\Sheets\WTP\I106_Calcite filters.dgn
Default

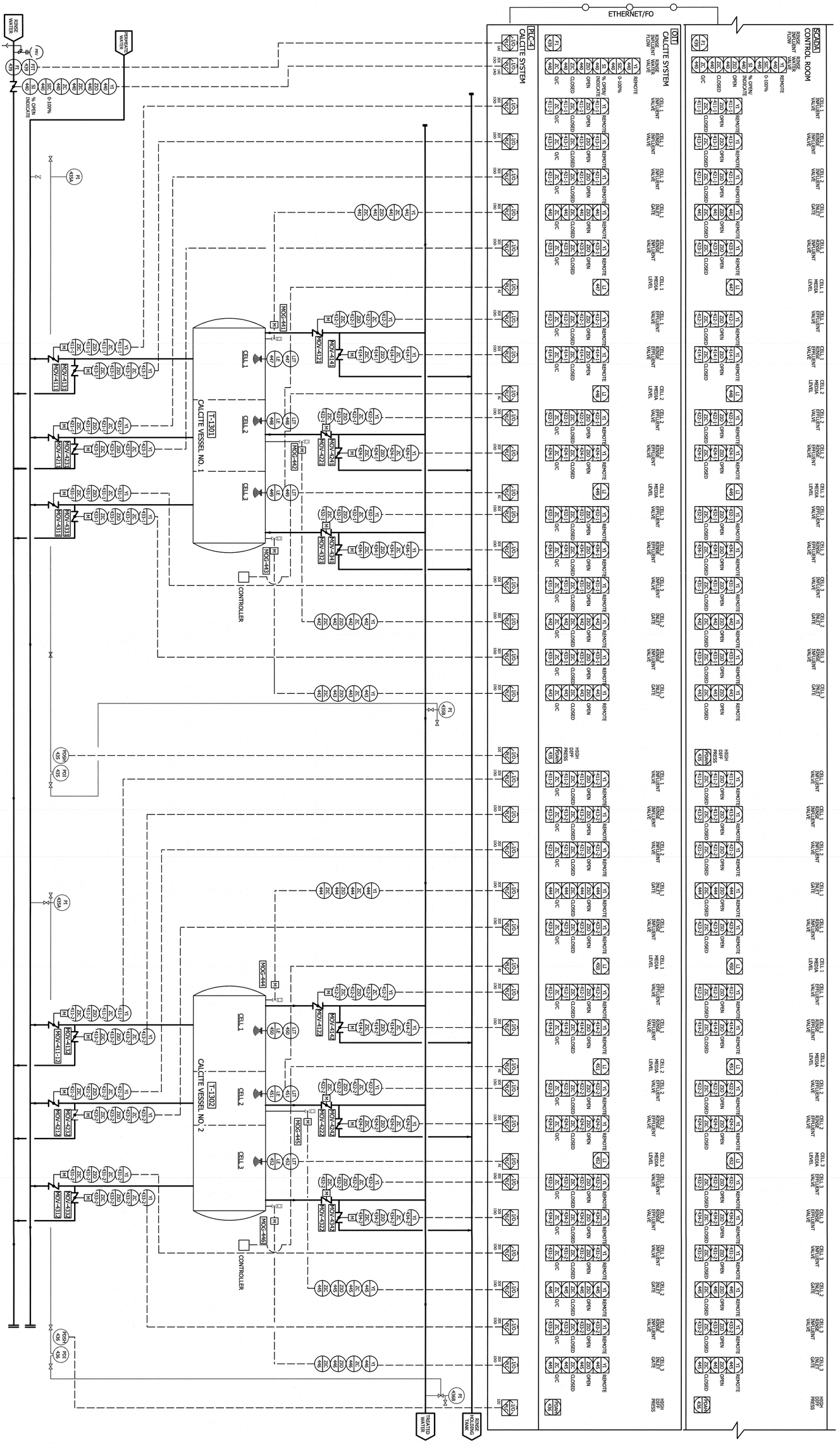
ETHERNET/FO
SCADA CONTROL ROOM
PLC-4
OIT1
CALCITE SYSTEM
RINSE WATER FLOW
INFLUENT WATER FLOW
% OPEN INDICATE
0-100%
REMOTE
OVC
CLOSED
OPEN
CELL 1 INFLUENT VALVE
CELL 2 INFLUENT VALVE
CELL 3 INFLUENT VALVE
CELL 1 INLET GATE
CELL 2 INLET GATE
CELL 3 INLET GATE
CELL 1 RINSE EFFLUENT VALVE
CELL 2 RINSE EFFLUENT VALVE
CELL 3 RINSE EFFLUENT VALVE
CELL 1 MEDIA LEVEL
CELL 2 MEDIA LEVEL
CELL 3 MEDIA LEVEL
HIGH DIFF PRESS
RINSE WATER
RINSE HOLDING TANK
CALCITE VESSEL NO. 1
T-1301
CALCITE VESSEL NO. 2
T-1302
CELL 1
CELL 2
CELL 3
CONTROLLER
MOV-4113
MOV-4123
MOV-4133
MOV-4213
MOV-4223
MOV-4233
MOV-4313
MOV-4323
MOV-4333
MOV-411-12
MOV-421-22
MOV-431-32
MOV-4410
MOV-4420
MOV-4430
MOV-4411-12
MOV-4421-22
MOV-4431-32
MOV-4510
MOV-4520
MOV-4530
MOV-4511-12
MOV-4521-22
MOV-4531-32
MOV-4610
MOV-4620
MOV-4630
MOV-4611-12
MOV-4621-22
MOV-4631-32
MOV-4710
MOV-4720
MOV-4730
MOV-4711-12
MOV-4721-22
MOV-4731-32
MOV-4810
MOV-4820
MOV-4830
MOV-4811-12
MOV-4821-22
MOV-4831-32
MOV-4910
MOV-4920
MOV-4930
MOV-4911-12
MOV-4921-22
MOV-4931-32

Default

SCADA

WELL 1 | WELL 2 | WELL 3

YC 164A-1 START/STOP PUMP	YA 164C-1 ALARM	YC 164A-2 START/STOP PUMP	YA 164C-2 ALARM	YC 164A-3 START/STOP PUMP	YA 164C-3 ALARM
YC 164B-1 OPEN/CLOSE VALVE	YA 164D-1 ALARM	YC 164B-2 OPEN/CLOSE VALVE	YA 164D-2 ALARM	YC 164B-3 OPEN/CLOSE VALVE	YA 164D-3 ALARM
YI 164A-1 RUN	YA 164E-1 ALARM	YI 164A-2 RUN	YA 164E-2 ALARM	YI 164A-3 RUN	YA 164E-3 ALARM
YI 164B-1 PVCP REMOTE	YA 164F-1 ALARM	YI 164B-2 PVCP REMOTE	YA 164F-2 ALARM	YI 164B-3 PVCP REMOTE	YA 164F-3 ALARM
YA 164A-1 ALARM	YA 164G-1 ALARM	YA 164A-2 ALARM	YA 164G-2 ALARM	YA 164A-3 ALARM	YA 164G-3 ALARM
YA 164B-1 ALARM	YA 164H-1 ALARM	YA 164B-2 ALARM	YA 164H-2 ALARM	YA 164B-3 ALARM	YA 164H-3 ALARM

ENET / FO

SHUTDOWN TREATMENT PROCESS

GST
LAHH 161
LAH 161
LAL 161
LALL 161
LIR 161

AI 162A pH | YC 198 O/C | YC 197 O/C | AI 162B CL2

PAH 180 / PAL 180 / PIR 180

FAH 167 / FAL 167 / FI 167

AI 168A pH

AI 168B CL2

GENERATOR
YI 177 / YA 178

YA 165 LOSS OF PHASE

FI 187 FLOW

YA 166 LOSS OF POWER

PLC-1

I/O PLC 2AI | I/O PLC 2AI | I/O PLC 2AI | I/O PLC 1AI | I/O PLC 1DI 2DO | I/O PLC 1DI 2DO | I/O PLC 1DI 2DO | I/O PLC 1AI | I/O PLC 1DI | I/O PLC 1DO | I/O PLC 1DO | I/O PLC 2AI | I/O PLC 2DI | I/O PLC 1DI | I/O PLC 1AI | I/O PLC 1DI

PCVP-HSP-1 | PCVP-HSP-2 | PCVP-HSP-3

YC 164A-1 START/STOP PUMP	YC 164A-2 START/STOP PUMP	YC 164A-3 START/STOP PUMP
YC 164B-1 OPEN/CLOSE VALVE	YC 164B-2 OPEN/CLOSE VALVE	YC 164B-3 OPEN/CLOSE VALVE
YI 164A-1 RUN	YI 164A-2 RUN	YI 164A-3 RUN
YI 164B-1 PVCP REMOTE	YI 164B-2 PVCP REMOTE	YI 164B-3 PVCP REMOTE
YA 164A-1 ALARM	YA 164A-2 ALARM	YA 164A-3 ALARM
YA 164B-1 ALARM	YA 164B-2 ALARM	YA 164B-3 ALARM
YA 164C-1 ALARM	YA 164C-2 ALARM	YA 164C-3 ALARM
YA 164D-1 ALARM	YA 164D-2 ALARM	YA 164D-3 ALARM
YA 164E-1 ALARM	YA 164E-2 ALARM	YA 164E-3 ALARM
YA 164F-1 ALARM	YA 164F-2 ALARM	YA 164F-3 ALARM
YA 164G-1 ALARM	YA 164G-2 ALARM	YA 164G-3 ALARM
YA 164H-1 ALARM	YA 164H-2 ALARM	YA 164H-3 ALARM

S SV-198

S SV-197

TREATED WATER INSTRUMENT PANEL
AIT 162
AE 162A pH
AE 162B CL2

LIT 161 (GST)
NOTE 2
LE 161 (GST)

CHEM. FEED VAULT
CAUSTIC
CORROSION INHIBITOR
SODIUM HYPO.
STATIC MIXER

FROM CALCITE CONTACTORS

HV-312A

FINISHED WATER GROUND STORAGE TANK
T-312

HV-312C

HV-1501C | HV-1501D

SRV-1501

PI 164B-1

HV-164A-1A

PCV-199-1 | HV-164A-1B

HSP-1

PI 164B-2

HV-164A-2A

PCV-199-2 | HV-164A-2B

HSP-2

PI 164B-3

HV-164A-3A

PCV-199-3 | HV-164A-3B

HSP-3

PIT 180

BV-321

S SV-196

FIT 167

NOTE 2

FE 167

MAG

HV-167A | HV-167B

HV-167C

S SV-195

AIT 168
AE 168A pH
AE 168B CL2

FINISHED WATER INSTRUMENT PANEL

GENERATOR

FINISHED WATER

TO DISTRIBUTION

FI 187

FE 187

HV-1505C

RPZ-1506

DRAIN

TO PLANT BUILDING

RPZ

DRAIN

TO CO2 FEED SYSTEM

FIRE/YARD

PLANT FIRE/WATER LOOP

NOTES:
1. SHUT DOWN PUMPS ON TANK LOW-LOW LEVEL.
2. PROVIDE INSTRUMENT SENSORS WITH MANUFACTURER CABLE WITH SPLICES.

REVISIONS

THE WOOTEN COMPANY
120 North Boylan Avenue Raleigh NC 27603-1423
919.828.0531 fax 919.834.3589
License Number: F-0115

BRUNSWICK REGIONAL WATER AND SEWER H2GO
BRUNSWICK COUNTY NORTH CAROLINA
CONTRACT No. 4
REVERSE OSMOSIS WATER TREATMENT PLANT
FINISHED WATER STORAGE TANK & FINISHED WATER PUMPS-P & ID

NORTH CAROLINA PROFESSIONAL SEAL 22531 ENGINEER CHARLES W. DAVIS
6 JUNE 20

DESIGNED BY:	CWD
DRAWN BY:	PMD/EML
CHECKED BY:	CWD
PROJECT NO.:	3081-AB
DATE:	JUNE 7, 2020
SCALE:	AS NOTED

SHEET 155 OF 181

I107

Print2PDFx.plt
2:8 ", in.
pdonaghy
6/5/2020 8:45:08 AM
T:\Projects\Brunswick_Regional_W&S_H2GO-3081\AB-Water_Supply&Treatment_Plant\Sheets\WTP\I107_POTWATERTANK.dgn

Print2PDFx.plt
2:8 ":" / in.
pdonaghy
6/5/2020 8:49:18 AM
T:\Projects\Brunswick_Regional_W&S_H2GO-3081\AB-Water_Supply&Treatment_Plant\Sheets\WTP\I108_RINSESTORTANK.dgn
Default

NOTES:
1. SHUT DOWN PUMPS ON TANK LOW-LOW LEVEL.
2. PROVIDE INSTRUMENT SENSORS WITH MANUFACTURERS CABLE WITH SPLICES.

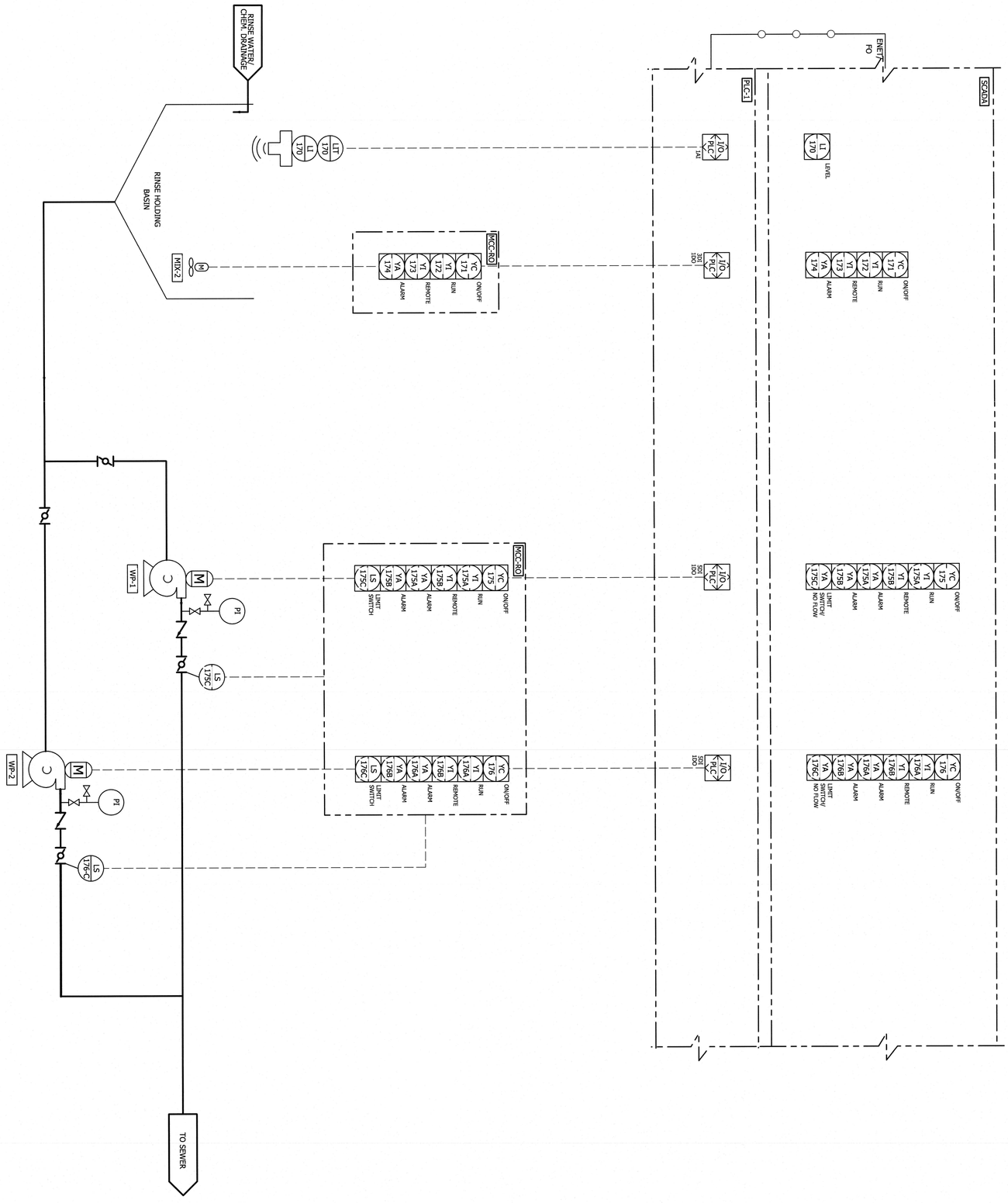

DESIGNED BY:	CWD
DRAWN BY:	PMD/EML
CHECKED BY:	CWD
PROJECT NO:	3081-AB
DATE:	JUNE 7, 2020
SCALE:	AS NOTED

SHEET 156 OF 181

I108

BRUNSWICK REGIONAL WATER AND SEWER H2GO
BRUNSWICK COUNTY NORTH CAROLINA
CONTRACT No. 4
REVERSE OSMOSIS WATER TREATMENT PLANT

RINSE STORAGE TANK
P & ID

THE WOOTEN COMPANY
120 North Boylan Avenue Raleigh NC 27603-1423
919.828.0531 fax 919.834.3589
License Number: F-0115

REVISIONS

Print2PDFx.plt
3.0000 ' / in.
pdonaghy
6/5/2020 8:49:48 AM
T:\Projects\Brunswick_Regional_W&S_H2GO-3081\AB-Water_Supply&Treatment_Plant\Sheets\WTP\I109_PID SCALE INHIBITOR.dgn
Default

NOTES:
1. SHUT DOWN PUMPS ON SELECTED TANK LOW-LOW LEVEL.
2. PROVIDE INSTRUMENT SENSORS WITH MANUFACTURER CABLE WITHOUT SPLICES.

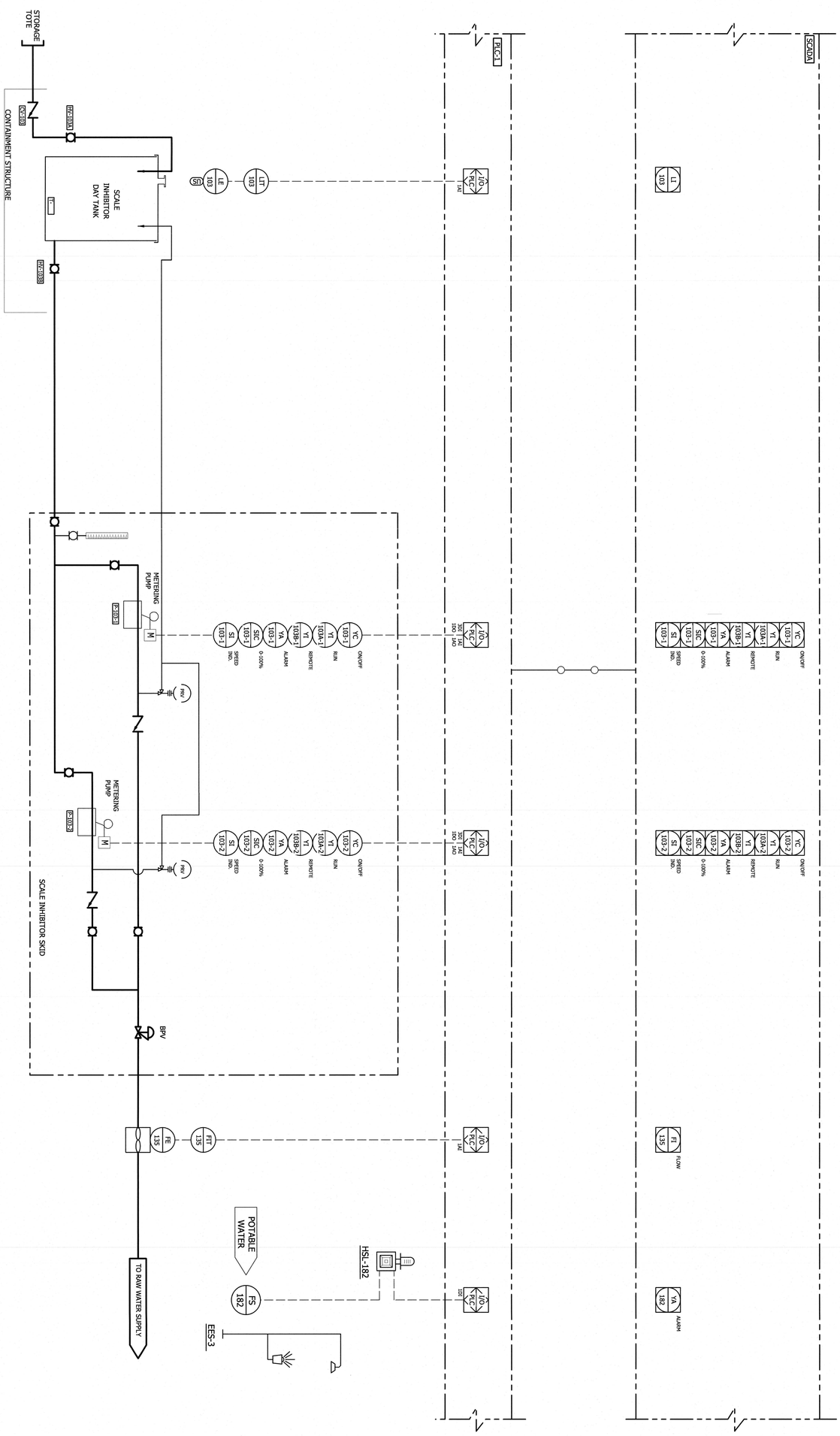

SHEET	157 OF 181
I109	
DESIGNED BY:	CWD
DRAWN BY:	PMD/EML
CHECKED BY:	CWD
PROJECT NO.:	3081-AB
DATE:	JUNE 7, 2020
SCALE:	AS NOTED

BRUNSWICK REGIONAL WATER AND SEWER H2GO
BRUNSWICK COUNTY NORTH CAROLINA
CONTRACT No 4
REVERSE OSMOSIS WATER TREATMENT PLANT
CHEMICAL SYSTEMS
SCALE INHIBITOR STORAGE & HANDLING
P & ID

THE WOOTEN COMPANY
120 North Boylan Avenue Raleigh NC 27603-1423
919.828.0531 fax 919.834.3589
License Number: F-0115

REVISIONS

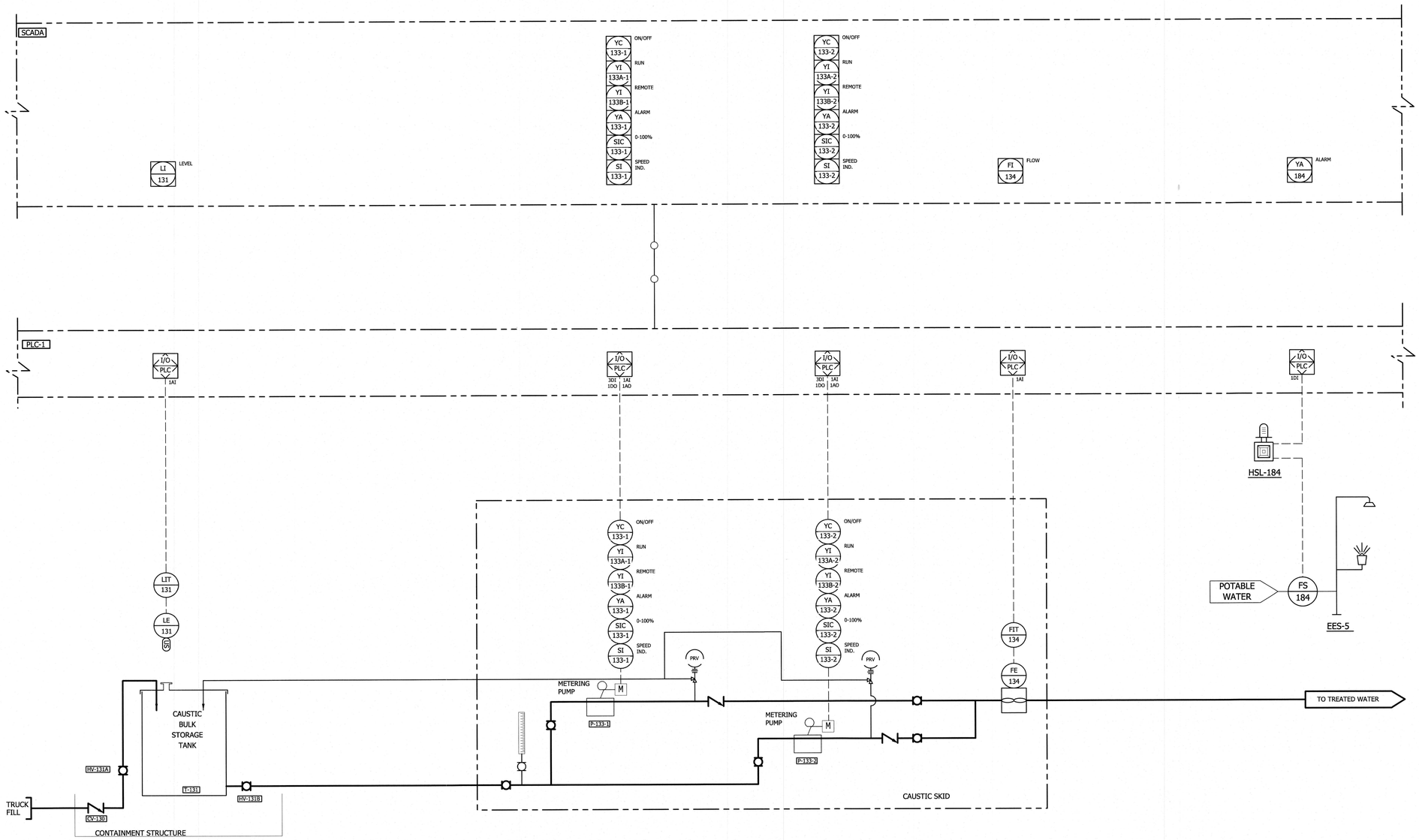

NOTES:
1. SHUT DOWN PUMPS ON SELECTED TANK LOW-LOW LEVEL.
2. PROVIDE INSTRUMENT SENSORS WITH MANUFACTURER CABLE WITHOUT SPLICES.

REVISIONS

THE WOOTEN COMPANY
120 North Boylan Avenue Raleigh, NC 27603-1423
919.828.0531 fax 919.834.3589
License Number: F-1015

BRUNSWICK REGIONAL WATER AND SEWER H2GO
BRUNSWICK COUNTY NORTH CAROLINA
REVERSE OSMOSIS WATER TREATMENT PLANT CONTRACT No 4
CHEMICAL SYSTEMS
CAUSTIC STORAGE & HANDLING-P & ID

NORTH CAROLINA PROFESSIONAL SEAL 2831 ENGINEER CHARLES W. DAVIS
7-June-20

DESIGNED BY: CWD
DRAWN BY: PMD/EML
CHECKED BY: CWD
PROJECT NO.: 3081-AB
DATE: JUNE 7, 2020
SCALE: AS NOTED

SHEET 158 OF 181

I110

Default
Print2PDFx.plt
3.0000 ', in.
pdfsimply
6/5/2020 8:50:16 AM
T:\Projects\Brunswick_Regional_W&S_H2GO-3081\AB-Water_Supply&Treatment_Plant\Sheets\WTP\I110_PID Caustic.dgn

Print2PDFx.plt
3.0000 ' / in.
pdonaghy
6/5/2020 8:50:52 AM
T:\Projects\Brunswick_Regional_W&S_H2GO-3081\AB-Water_Supply&Treatment_Plant\Sheets\WTP\I111_PID Fluoride.dgn
Default

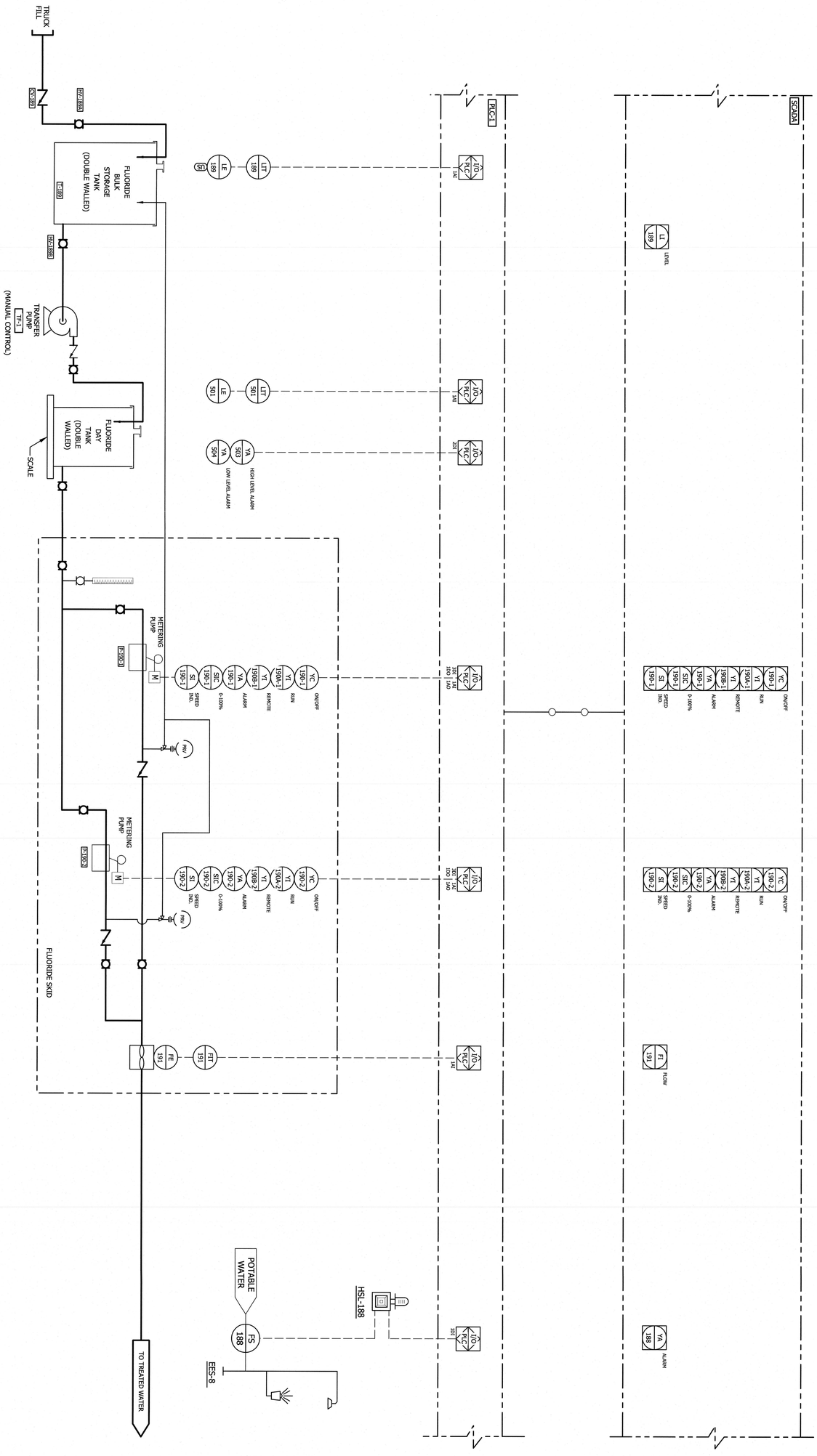

NOTES:
1. SHUT DOWN PUMPS ON SELECTED TANK LOW-LOW LEVEL.
2. PROVIDE INSTRUMENT SENSORS WITH MANUFACTURER CABLE WITHOUT SPLICES.

SHEET	159 OF 181
	I111
DESIGNED BY:	CWD
DRAWN BY:	PMD/EML
CHECKED BY:	CWD
PROJECT NO.:	3081-AB
DATE:	JUNE 7, 2020
SCALE:	AS NOTED

NORTH CAROLINA PROFESSIONAL SEAL 22931 ENGINEER CHRISTOPHER W. DAVIS

BRUNSWICK REGIONAL WATER AND SEWER H2GO
BRUNSWICK COUNTY NORTH CAROLINA
CONTRACT No 4
REVERSE OSMOSIS WATER TREATMENT PLANT

CHEMICAL SYSTEMS
FLUORIDE STORAGE & HANDLING-P & ID

THE WOOTEN COMPANY
120 North Boylan Avenue Raleigh NC 27603-1423
919.828.0531 fax 919.834.3589
License Number: F-0115

REVISIONS

NOTES:
1. SHUT DOWN PUMPS ON SELECTED TANK LOW-LOW LEVEL SIGNAL.
2. PROVIDE INSTRUMENT SENSORS WITH MANUFACTURER CABLE WITHOUT SPLICES.

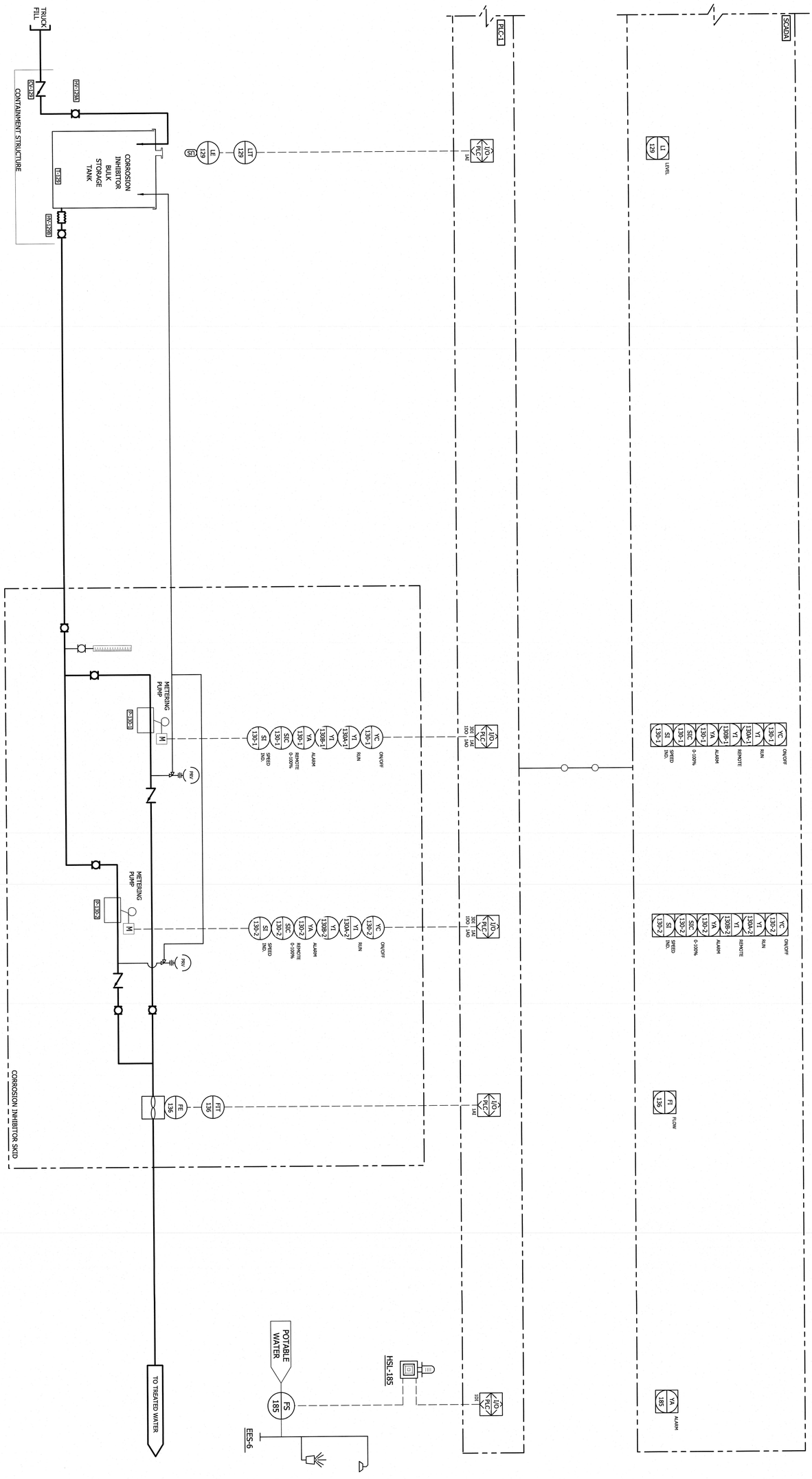

SHEET	160 OF 181
I112	
DESIGNED BY:	CWD
DRAWN BY:	PMD/EML
CHECKED BY:	CWD
PROJECT NO.:	3081-AB
DATE:	JUNE 7, 2020
SCALE:	AS NOTED

NORTH CAROLINA PROFESSIONAL ENGINEER SEAL 25451 CHRISTOPHER W. JARVIS

BRUNSWICK REGIONAL WATER AND SEWER H2GO
BRUNSWICK COUNTY NORTH CAROLINA
CONTRACT No 4
REVERSE OSMOSIS WATER TREATMENT PLANT
CHEMICAL SYSTEMS
CORROSION INHIBITOR STORAGE & HANDLING
P & ID

THE WOOTEN COMPANY
120 North Boylan Avenue Raleigh NC 27603-1423
919.828.0531 fax 919.834.3589
License Number: F-0115

REVISIONS

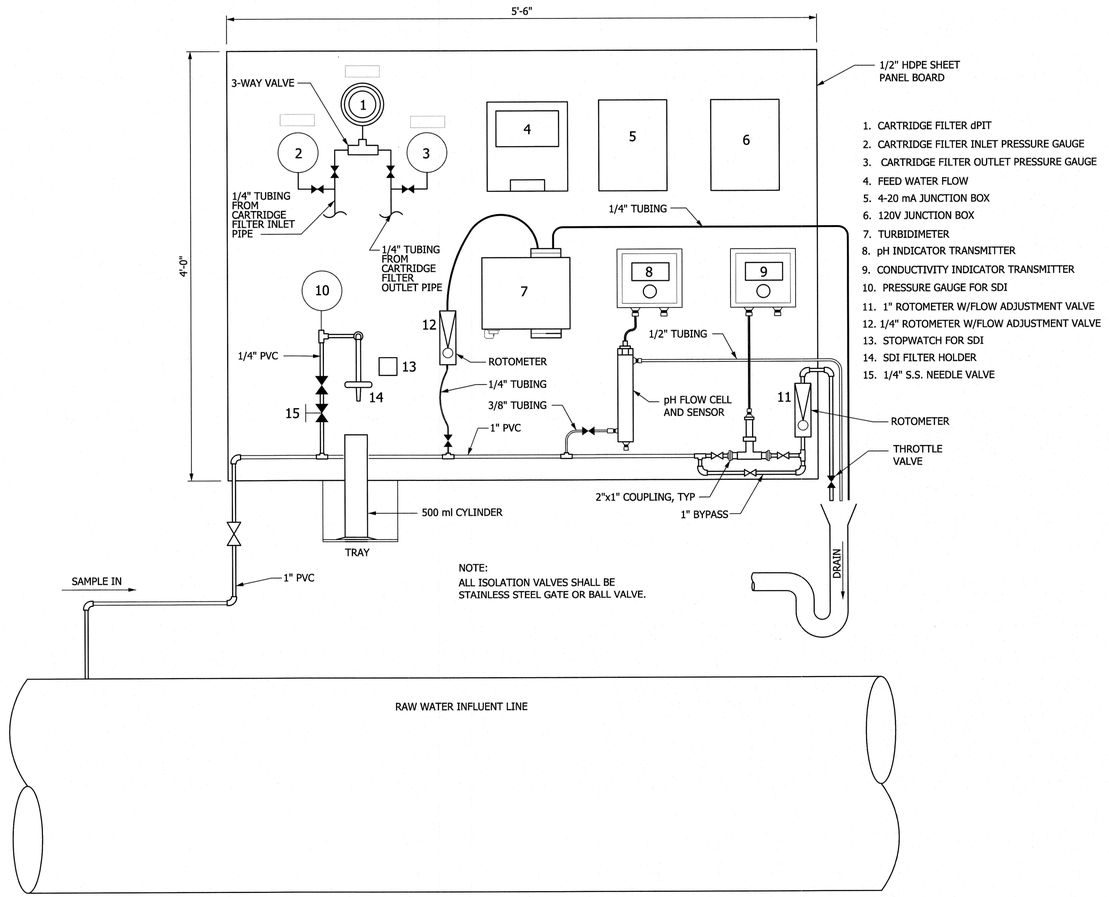

1 M101 RAW WATER PANEL
SCALE: 1 1/2" = 1'-0"

SEE DETAIL 7/M107 FOR COMBINED SAMPLE AND INSTRUMENTATION PANEL FROM R.O. MANUFACTURER

2 PANELS SHALL BE PROVIDED FROM THE R.O. EQUIPMENT PROVIDER MOUNTED ON THE R.O. TRAIN. GENERAL CONTRACTOR SHALL INSTALL AND WIRE EQUIPMENT TO PANEL AS REQUIRED.

2 M101 R.O. TRAIN INSTRUMENT PANEL
SCALE: 1 1/2" = 1'-0"

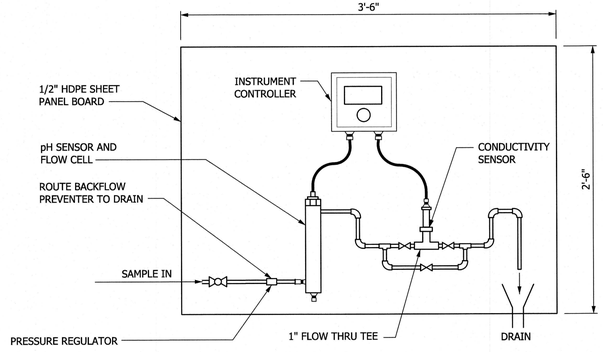

3 M101 COMBINED PERMEATE PANEL
COMBINED CONCENTRATE PANEL
SCALE: 1 1/2" = 1'-0"

2 PANELS SHALL BE PROVIDED. SEE PLANS AND P&ID FOR LOCATIONS.

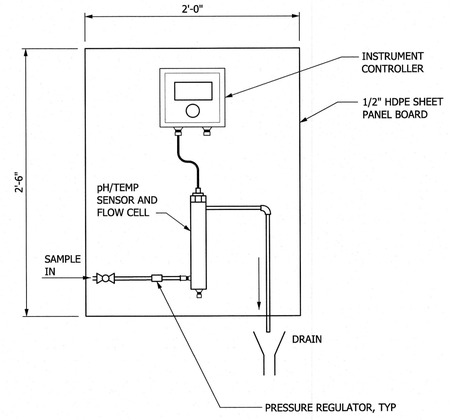

4 M101 CLEANING SOLUTION pH
SCALE: 1 1/2" = 1'-0"

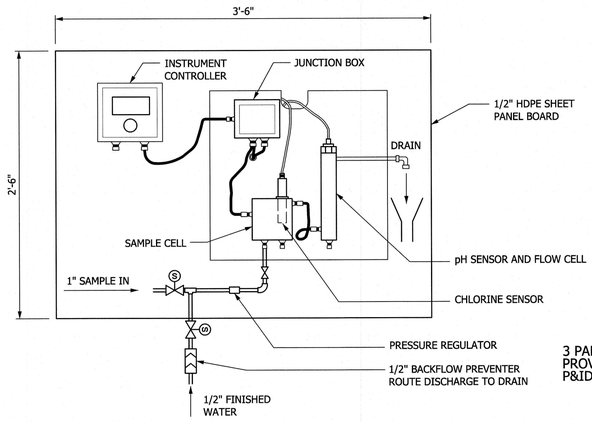

5 M101 pH AND CHLORINE RESIDUAL
SCALE: 1 1/2" = 1'-0"

3 PANELS SHALL BE PROVIDED. SEE PLANS AND P&ID FOR LOCATIONS.

REVISIONS

THE WOOTEN COMPANY
120 North Boylan Avenue Raleigh, NC 27603-1423
919.828.0531 fax 919.834.3589
License Number: F-0113

BRUNSWICK REGIONAL WATER AND SEWER H2GO
BRUNSWICK COUNTY NORTH CAROLINA
CONTRACT No 4
REVERSE OSMOSIS WATER TREATMENT PLANT

INSTRUMENT CONTROL PANEL LAYOUTS

NORTH CAROLINA PROFESSIONAL SEAL 25311 ENGINEER CHARLES W. DAVIS
7-JUNE-20

DESIGNED BY:	CWD
DRAWN BY:	PMD/EML
CHECKED BY:	CWD
PROJECT NO.:	3081-AB
DATE:	JUNE 7, 2020
SCALE:	AS NOTED

SHEET 161 OF 181

I113

Default
Print2PDFx.plt
0.6667 " / in.
pdonaghy
6/5/2020 8:52:12 AM
T:\Projects\Brunswick_Regional_WAS_H2GO-3081\AB-Water_Supply&Treatment_Plant\Sheets\WTP\I113_SAMPLE PANELS.dgn

PEDESTAL SCHEDULE	
TYPE	SIZE AND REINFORCEMENT
P1 & P1A	24"x28" CIP CONC. (3500 Psi) W/8–#7 DOWELS & 3–#3 TIES @ 9" O.C.
P2	28"x28" CIP CONC. (3500 Psi) W/4–#7 DOWELS & #3 TIES @ 9" O.C.
P3 & P3A	34"x28" CIP CONC. (3500 Psi) W/8–#7 DOWELS & 3–#3 TIES @ 9" O.C.
P4A	32"x28" CIP CONC. (3500 Psi) W/8–#7 DOWELS & 3–#3 TIES @ 9" O.C.
P5	24"x24" CIP CONC. (3500 Psi) W/8–#7 DOWELS & #3 TIES @ 12" O.C.

FOOTING SCHEDULE				
MARK	SIZE	DEPTH	BOTTOM REINFORCEMENT	TOP REINFORCEMENT
F4	4'–0"x4'–0"	12"	5–#5 @ EQA. SPA. E.W.	5–#4 @ EQA. SPA. E.W.
F5	5'–0"x5'–0"	12"	6–#5 @ EQA. SPA. E.W.	6–#4 @ EQA. SPA. E.W.
F6	6'–0"x6'–0"	15"	7–#6 @ EQA. SPA. E.W.	7–#4 @ EQA. SPA. E.W.
F7	7'–0"x7'–0"	18"	8–#6 @ EQA. SPA. E.W.	8–#4 @ EQA. SPA. E.W.
F8	8'–0"x8'–0"	24"	9–#6 @ EQA. SPA. E.W.	9–#4 @ EQA. SPA. E.W.
F9	9'–0"x9'–0"	24"	10–#7 @ EQA. SPA. E.W.	10–#4 @ EQA. SPA. E.W.
F10	5'–0"x9'–0"	24"	6–#7 @ EQA. SPA. LONG DIR. 10–#5 @ EQA. SPA. SHORT DIR.	6–#4 @ EQA. SPA. LONG DIR. 10–#4 @ EQA. SPA. SHORT DIR.

FOUNDATION PLAN

SCALE: 1/8" = 1'–0"

NOTES:

1. FOLLOW ARCHITECTURAL FLOOR PLANS FOR LOCATIONS AND TYPES OF ALL NON–LOAD BEARING WALLS IF THERE IS A CONFLICT.
2. FOR FOOTING STEP DETAIL, SEE 4/S109.
3. FOR TYPICAL DETAILS AND GENERAL NOTES, SEE SHEET S110.

** NOTE:

DIMENSIONS MAY BE ADJUSTED SLIGHTLY BY PRE–ENGINEERED BUILDING MANUFACTURER.

LEGEND

1. S.C.J. – INDICATES SLAB SAWED CONTROL JOINTS.
   C.J. – INDICATES TRENCH SLAB & WALL CONTROL JOINT, SEE 5/S107 FOR DETAIL.
   CONST. JT. – INDICATES TRENCH SLAB & WALL CONSTRUCTION JOINT, SEE 6/S107 FOR DETAIL.
2. INDICATES SIZES OF PEDESTAL (SEE PEDESTAL SCHEDULE).
   INDICATES FOOTING TYPE (SEE FOOTING SCHEDULE FOR SIZE AND REINFORCEMENT).
   INDICATES COLUMN FOOTING.
   INDICATES TOP OF FOOTING ELEVATION.
3. INDICATES CONTINUOUS WALL.
   INDICATES CONTINUOUS FOOTING.
   INDICATES TOP OF FOOTING ELEVATION.
4. LABEL IDENTIFICATION
   SECTION & DETAIL NOTATION
   SHEET NO. APPEARING ON
5. F.O.B. – INDICATES FACE OF BLOCK.
6. [–1"] INDICATES TOP OF SLAB ELEVATION ABOVE (+) OR BELOW (–) EL. 30.00'.

REVISIONS

THE WOOTEN COMPANY
ENGINEERING | PLANNING | ARCHITECTURE
120 North Boylan Avenue Raleigh NC 27603-1423
919.828.0531 fax 919.834.3589
License Number: F–0115

BRUNSWICK REGIONAL WATER AND SEWER AUTHORITY
BRUNSWICK COUNTY NORTH CAROLINA
NEW GROUND WATER SUPPLY AND REVERSE OSMOSIS WATER TREATMENT PLANT
TREATMENT BUILDING FOUNDATION PLAN

HMC CONSULTANTS
CONSULTING ENGINEERS
NC LICENSE NO. F–0282
6408 WINTHROP DR.
RALEIGH, NORTH CAROLINA
(919) 783–7288
fax (919) 500–7475

DESIGNED BY:	MCH
DRAWN BY:	RGK
CHECKED BY:	MCH
PROJECT NO.	3081–AB
DATE:	JUNE, 2020
SCALE:	1/8" = 1'–0"

SHEET 162 OF 181

S101

17102–S101

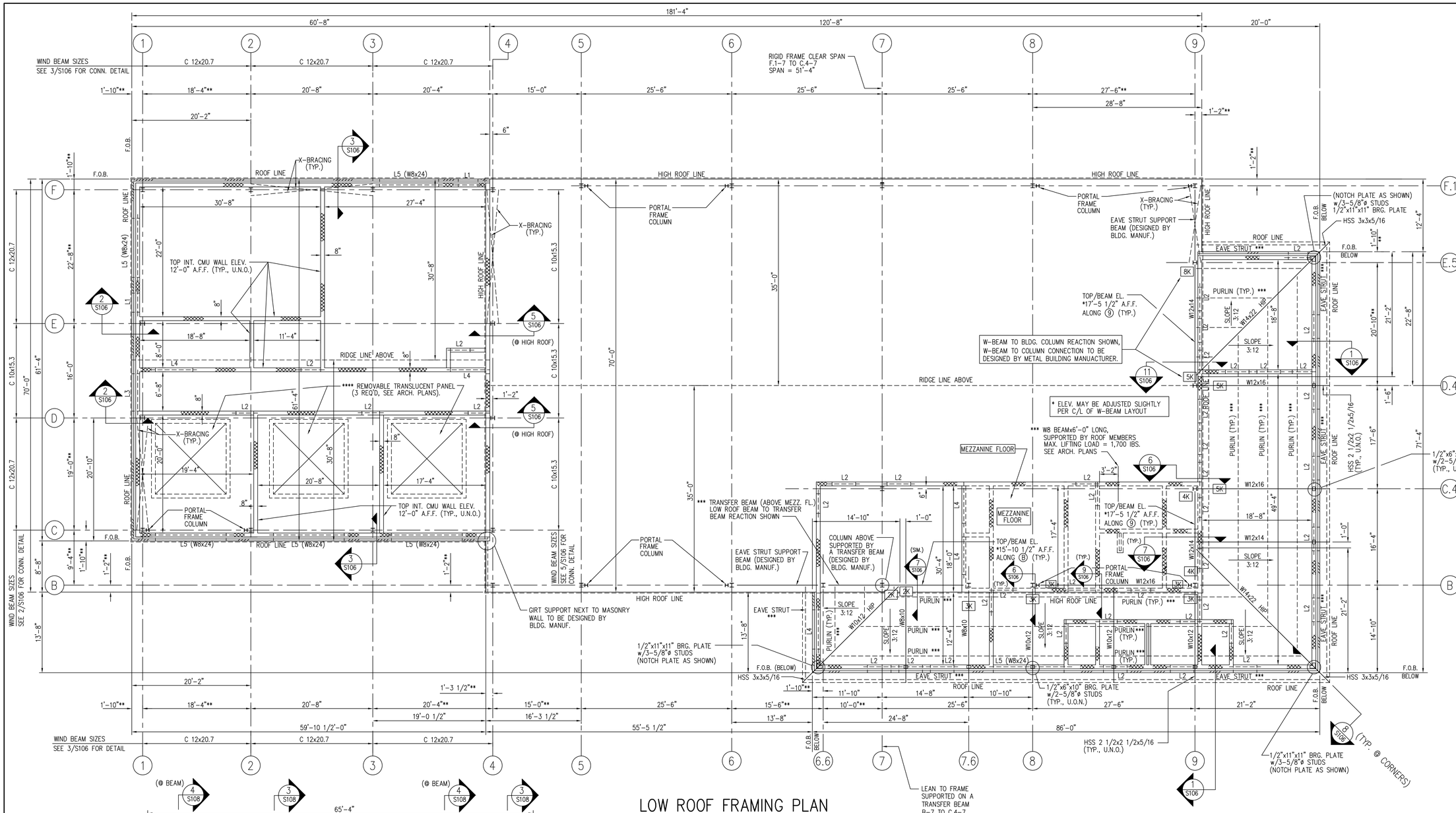

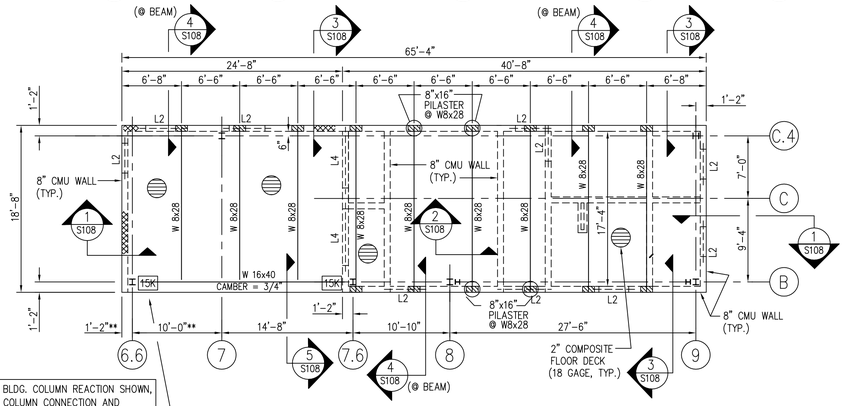

MEZZANINE FLOOR FRAMING PLAN

SCALE: 1/8" = 1'-0"

LOW ROOF FRAMING PLAN

SCALE: 1/8" = 1'-0"

** NOTE:
DIMENSIONS MAY BE ADJUSTED SLIGHTLY BY PRE-ENGINEERED BUILDING MANUFACTURER.

*** NOTE:
TO BE DESIGNED BY BUILDING MANUFACTURER.

**** NOTE:
REMOVABLE TRANSLUCENT PANEL'S SUPPORTING MEMBERS, INCLUDING CURBS & CHANNELS ARE TO BE DESIGNED BY BUILDING MANUFACTURER. REMOVABLE TRANSLUCENT PANEL DL=3 PSF MIN.

NOTE:
WIND BEAM SIZES SHOWN ARE THE MINIMUM SIZE TO BE USED, STRONGER MEMBERS COULD BE SPECIFIED BY THE BLDG. MANUF. TO MEET THE DESIGN LOADS.

LOW ROOF BEAMS & MEZZANINE FLOOR BEAMS SHOWN ARE THE MINIMUM SIZES TO BE USED, STRONGER MEMBERS COULD BE SPECIFIED BY THE BLDG. MANUF. TO MEET THE DESIGN LOADS.

LEGEND

1) W 00x00 — INDICATES STEEL W-BEAM
2) L1 — INDICATES LINTEL, SEE SCHEDULE ON SHEET S105
3) F.O.B. — INDICATES FACE OF BLOCK
4) 4K — INDICATES W-BEAM UNFACTORED DL+LL REACTION ON METAL BUILDING COLUMN OR BEAM THAT ARE TO BE DESIGNED BY BLDG. MANUFACTURER.

NOTE
1) SEE SHEET S105 FOR CMU LINTEL DETAILS.
2) SEE 6/S105 FOR LINTEL L5 (W8X24) DETAILS.
3) IF THERE IS A CONFLICT, USE ARCH. DRAWINGS FOR LOCATIONS OF ALL INTERIOR CMU WALLS

MEZZANINE FLOOR DECKING

2" COMPOSITE FLOOR DECK
w/5" TOTAL SLAB DEPTH (NORMAL WEIGHT, 150 PCF)

DECK GAGE = 18
Ip = 0.557 in⁴/ft.
In = 0.557 in⁴/ft.
Sp = 0.512 in³/ft.
Sn = 0.518 in³/ft.
Fy = 40 Ksi
(OR APPROVED EQUAL)

SEE SHEET S109 FOR FLOOR DECK CONSTRUCTION DETAIL

REVISIONS

THE WOOTENCOMPANY
ENGINEERING | PLANNING | ARCHITECTURE
120 North Boylan Avenue Raleigh NC 27603-1423
919.828.0531 fax 919.834.3589
License Number: F-0115

BRUNSWICK REGIONAL WATER AND SEWER AUTHORITY
BRUNSWICK COUNTY NORTH CAROLINA
NEW GROUND WATER SUPPLY AND
REVERSE OSMOSIS WATER TREATMENT PLANT
TREATMENT BUILDING
LOW ROOF & MEZZANINE FLOOR FRAMING PLANS

HMC CONSULTANTS
CONSULTING ENGINEERS
NC LICENSE NO. F-0282
6408 WINTHROP DR.
RALEIGH, NORTH CAROLINA
(919) 783-7288
fax (919) 500-7475

DESIGNED BY:	MCH
DRAWN BY:	RGK
CHECKED BY:	MCH
PROJECT NO.	3081-AB
DATE:	JUNE, 2020
SCALE:	1/8" = 1'-0"

SHEET 163 OF 181

S102

17102-S102

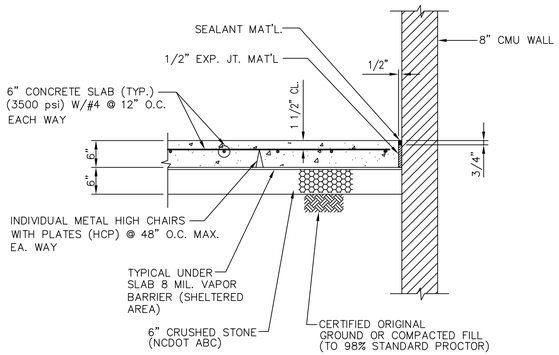

A **WALL ISOLATION JOINT (I.J.)**

SCALE: N.T.S.

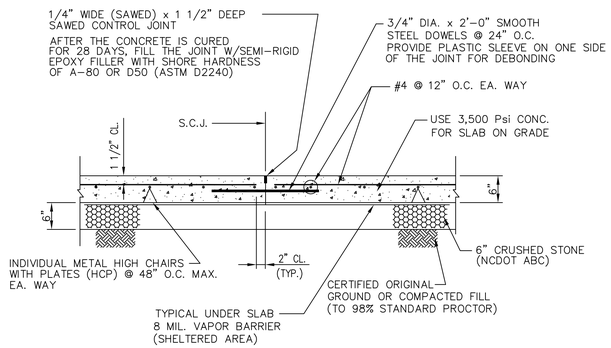

NOTE: 1) USE VAPOUR BARRIER UNDER SLAB INSIDE BLDG ONLY.

B **SAWED CONTROL JOINT (S.C.J.)**

SCALE: N.T.S.

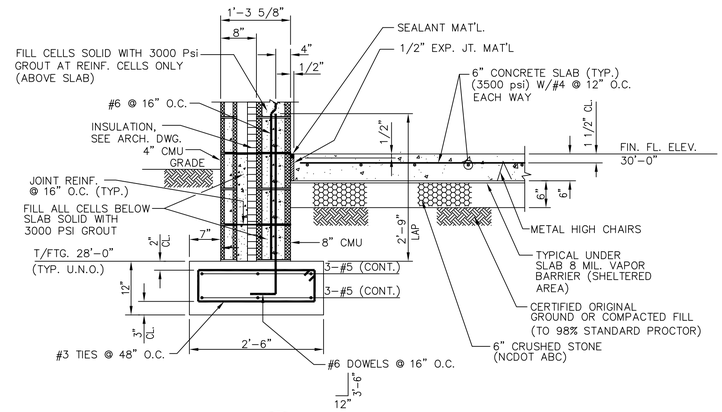

2 / S101 **SECTION**

SCALE: 3/4" = 1'-0"

NOTE: 1) USE VAPOUR BARRIER UNDER SLAB INSIDE BLDG.

1 / S101 **TYPICAL 6" SLAB DETAILS**

SCALE: N.T.S.

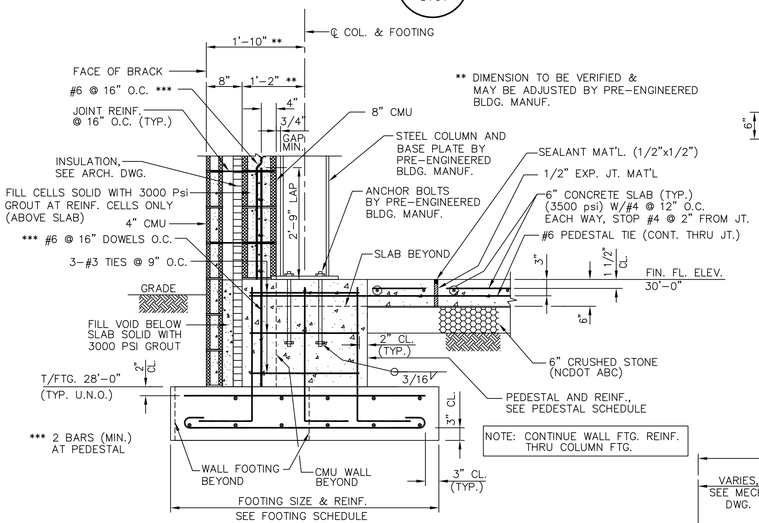

3 / S101 **SECTION AT COLUMN**

SCALE: 3/4" = 1'-0"

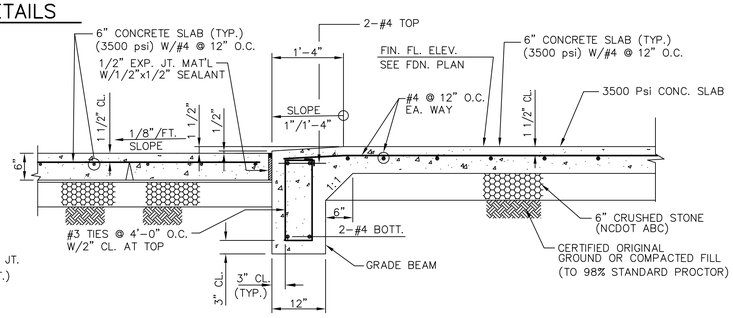

4 / S101 **TYPICAL GRADE BEAM SECTION (AT OVERHEAD DOOR, TYPICAL)**

SCALE: 3/4" = 1'-0"

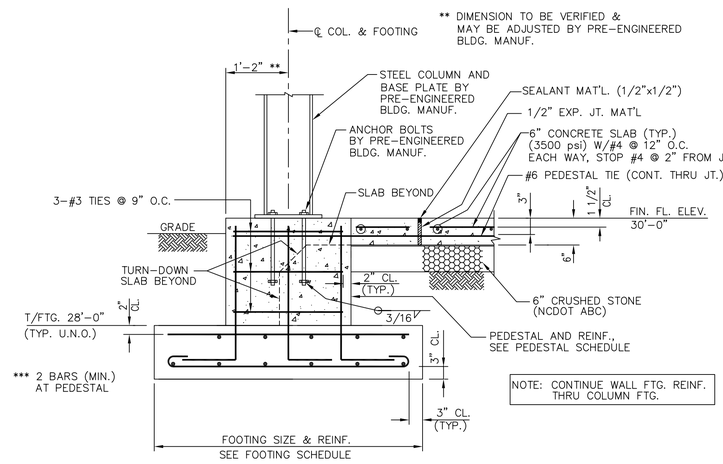

8 / S101 **SECTION AT COLUMN**

SCALE: 3/4" = 1'-0"

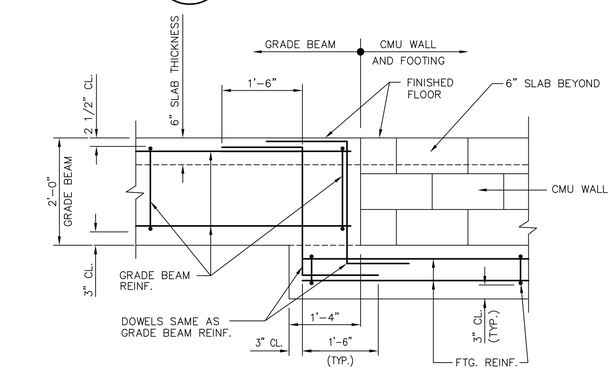

5 / S101 **GRADE BEAM TO CMU WALL FOOTING STEP DETAIL**

SCALE: 3/4" = 1'-0"

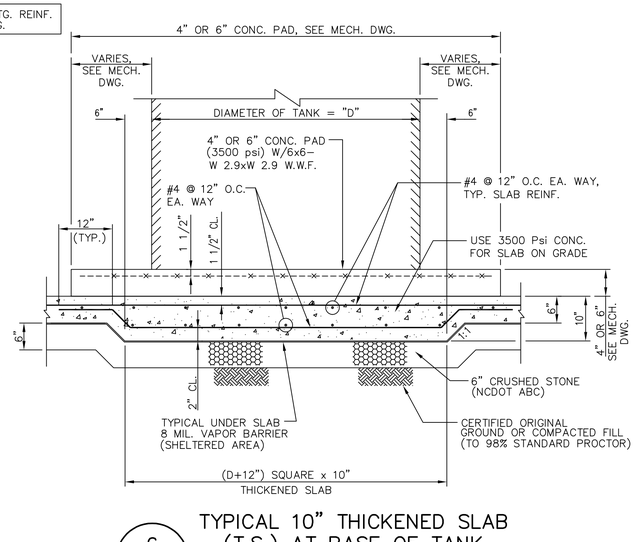

6 / S101 **TYPICAL 10" THICKENED SLAB (T.S.) AT BASE OF TANK**

SCALE: 3/4" = 1'-0"

(USE THICKENED SLAB DETAIL AT TANK BASE
WHERE TANK HEIGHT IS >= 10'-0",
SEE FDN. PLAN FOR TANK BASE T.S. LOCATION)

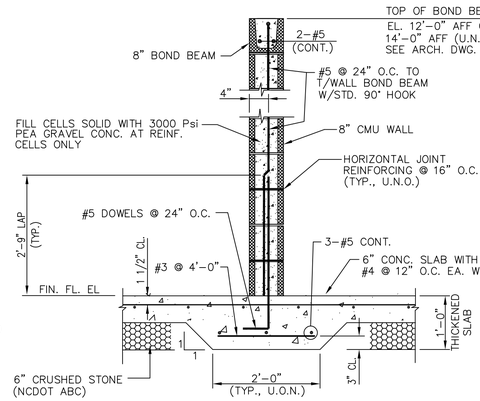

7 / S101 **TYP. SECTION AT 8" INTERIOR NON-LOAD BEARING CMU WALL**

SCALE: 3/4" = 1'-0"

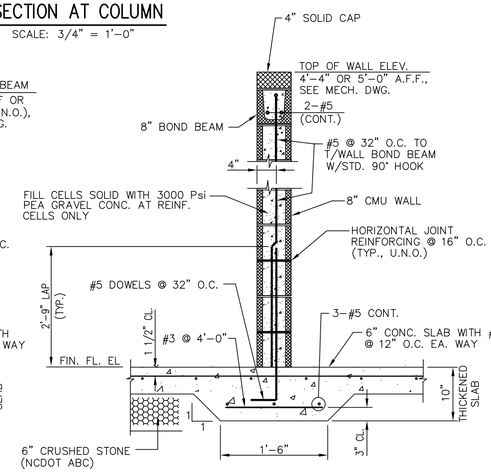

9 / S101 **TYP. SECTION AT 4'-4" OR 5'-0" HIGH TANK CONTAINMENT CMU WALL**

SCALE: N.T.S.

REVISIONS

THE WOOTEN COMPANY
ENGINEERING | PLANNING | ARCHITECTURE
120 North Boylan Avenue Raleigh NC 27603-1423
919.828.0531 fax 919.834.3589
License Number: F-0115

BRUNSWICK REGIONAL WATER AND SEWER AUTHORITY
BRUNSWICK COUNTY NORTH CAROLINA
NEW GROUND WATER SUPPLY AND
REVERSE OSMOSIS WATER TREATMENT PLANT

TREATMENT BUILDING
SECTIONS AND DETAILS

HMC CONSULTANTS
CONSULTING ENGINEERS
NC LICENSE NO. F-0282
6408 WINTHROP DR.
RALEIGH, NORTH CAROLINA
(919) 783-7288
fax (919) 506-7475

DESIGNED BY:	MCH
DRAWN BY:	RGK
CHECKED BY:	MCH
PROJECT NO.	3081-AB
DATE:	JUNE, 2020
SCALE:	3/4" = 1'-0"

SHEET 164 OF 181

S103

17102-S103

GRATING NOTES:
1 3/4"x3/16" WELDED BAR ALUMINUM GRATING
DESIGN LL = 100 PSF (MIN.)
BAR SPACING = 1 3/16"

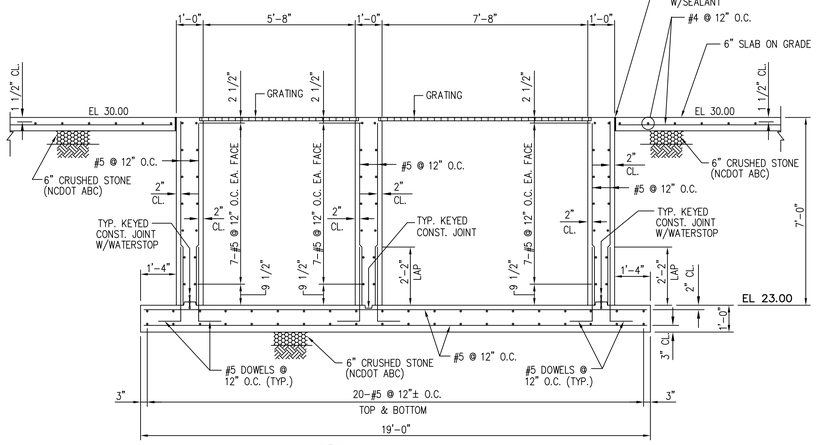

1 S101 SECTION
SCALE: 3/8" = 1'-0"

GRATING NOTES:
1 3/4"x3/16" WELDED BAR ALUMINUM GRATING
DESIGN LL = 100 PSF (MIN.)
BAR SPACING = 1 3/16"

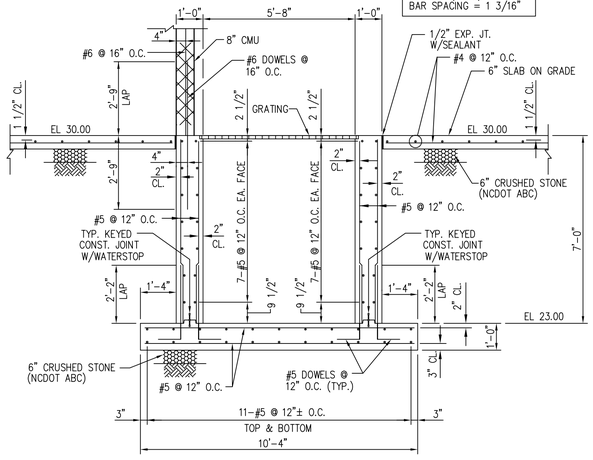

2 S101 SECTION
SCALE: 3/8" = 1'-0"

GRATING NOTES:
1 3/4"x3/16" WELDED BAR ALUMINUM GRATING
DESIGN LL = 100 PSF (MIN.)
BAR SPACING = 1 3/16"

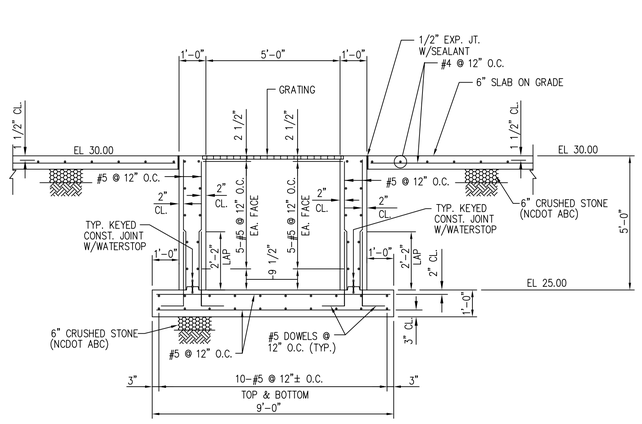

3 S101 SECTION
SCALE: 3/8" = 1'-0"

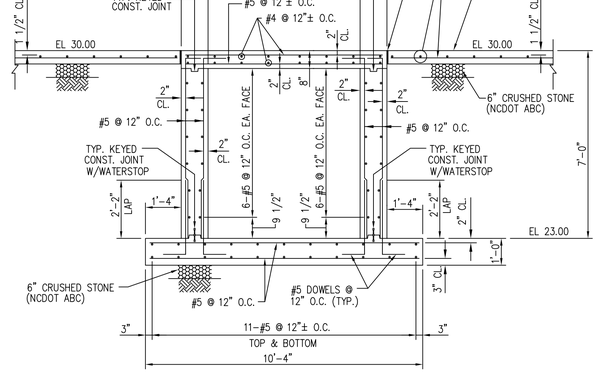

4 S101 SECTION
SCALE: 3/8" = 1'-0"

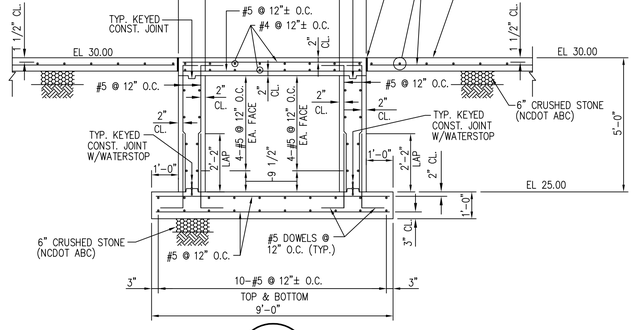

5 S101 SECTION
SCALE: 3/8" = 1'-0"

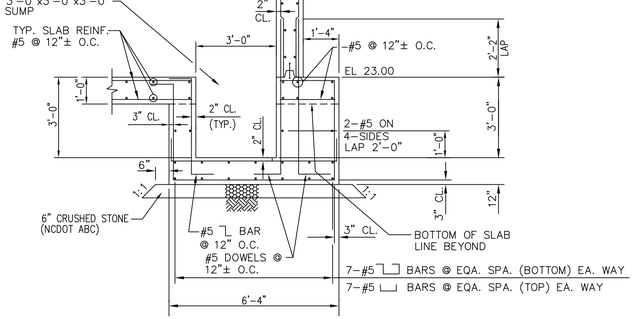

6 S101 SECTION AT SUMP
SCALE: 3/8" = 1'-0"

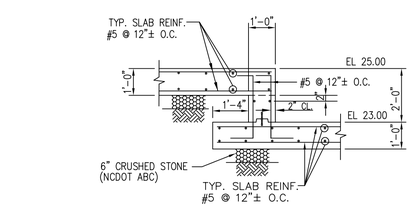

7 S101 SECTION
SCALE: 3/8" = 1'-0"

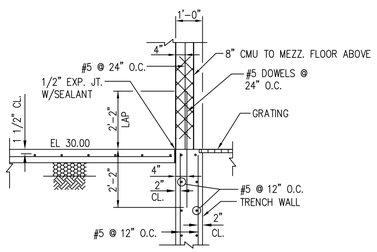

8 S101 SECTION
SCALE: 3/8" = 1'-0"

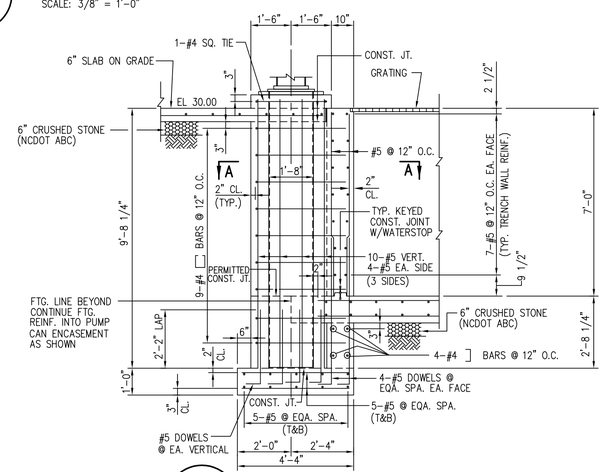

9 S101 SECTION
SCALE: 3/8" = 1'-0"

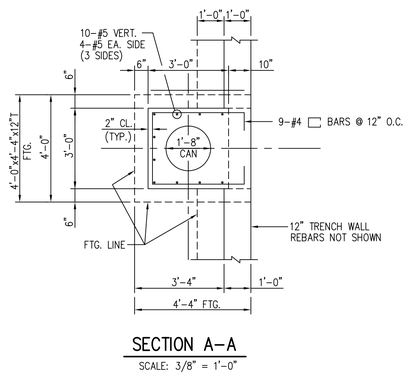

SECTION A-A
SCALE: 3/8" = 1'-0"

THE WOOTENCOMPANY
ENGINEERING | PLANNING | ARCHITECTURE
120 North Boylan Avenue Raleigh NC 27603-1423
919.828.0531 fax 919.834.3589
License Number: F-0115

BRUNSWICK REGIONAL WATER AND SEWER AUTHORITY
BRUNSWICK COUNTY NORTH CAROLINA
NEW GROUND WATER SUPPLY AND REVERSE OSMOSIS WATER TREATMENT PLANT
TREATMENT BUILDING SECTIONS AND DETAILS

HMC CONSULTANTS
CONSULTING ENGINEERS
NC LICENSE NO. F-0282
6408 WINTHROP DR.
RALEIGH, NORTH CAROLINA
(919) 783-7288
fax (919) 500-7475

DESIGNED BY:	MCH
DRAWN BY:	RGK
CHECKED BY:	MCH
PROJECT NO.	3081-AB
DATE:	JUNE, 2020
SCALE:	3/8" = 1'-0"

SHEET 165 OF 181

S104

17102-S104

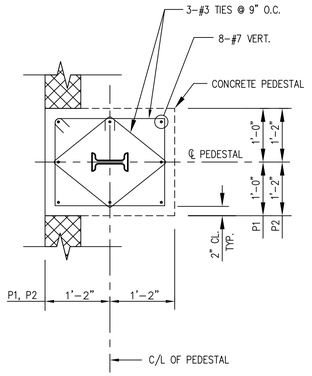

1 S101 — PEDESTAL DETAIL (P1 OR P2)

NOT TO SCALE

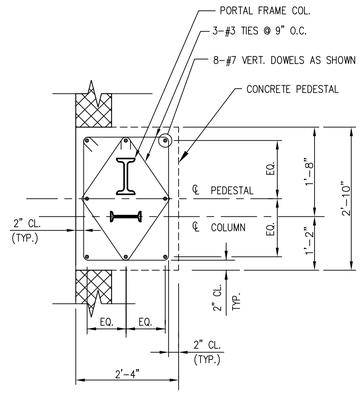

2 S101 — PEDESTAL DETAIL (P3)

NOT TO SCALE

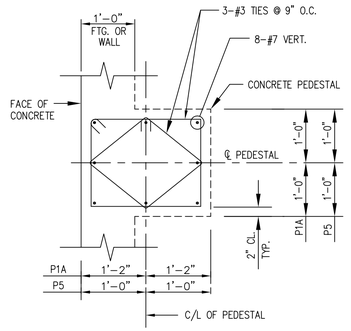

3 S101 — PEDESTAL DETAIL (P1A & P5)

NOT TO SCALE

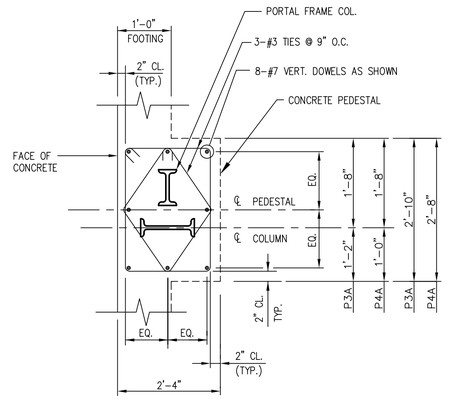

4 S101 — PEDESTAL DETAIL (P3A & P4A)

NOT TO SCALE

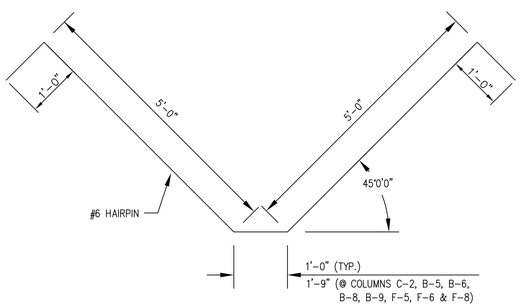

TYPICAL CONFIGURATION

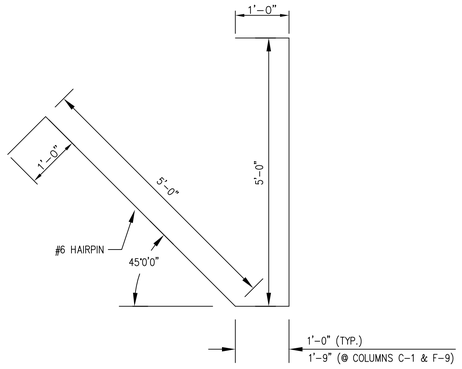

CORNER CONFIGURATION

5 S101 — #6 PEDESTAL TIE DETAIL

NOT TO SCALE

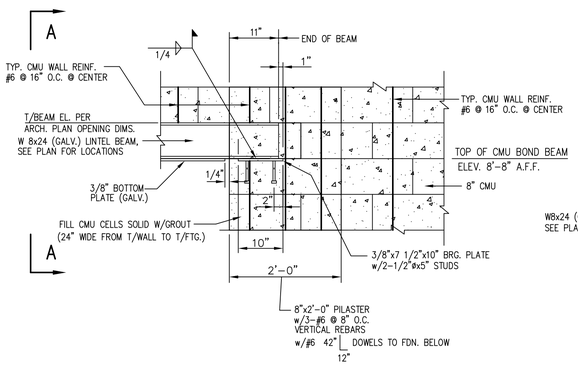

6 S102 — TYPICAL W8x24 LINTEL BEAM – L5 BEARING DETAIL

SCALE: N.T.S.

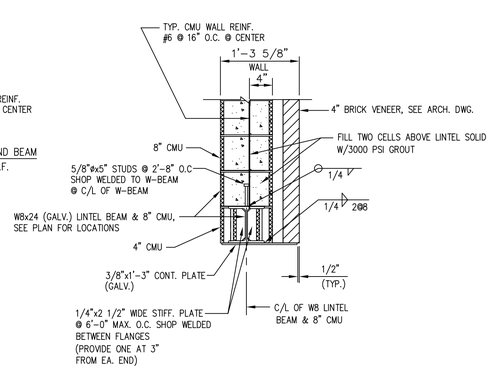

SECTION A–A

SCALE: N.T.S.

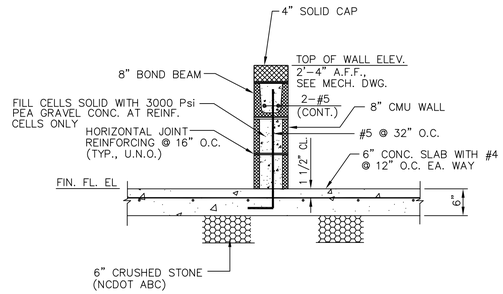

8 S101 — TYP. SECTION AT 2'–4" HIGH TANK CONTAINMENT CMU WALL

SCALE: 3/4" = 1'–0"

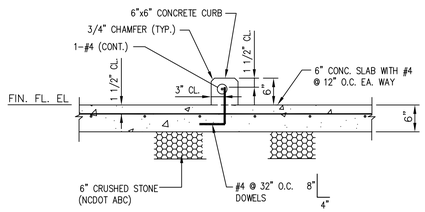

9 S101 — TYP. SECTION AT 6"x6" CONCRETE CURB

SCALE: 3/4" = 1'–0"

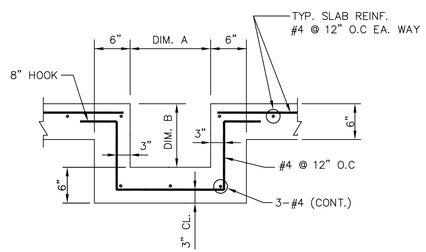

NOTE: TRENCH DIMENSIONS PER MECH. PLANS.

10 S101 — TYPICAL DETAIL OF TRENCH (U.O.N.)

SCALE: N.T.S.

MASONRY LINTEL SCHEDULE

L1	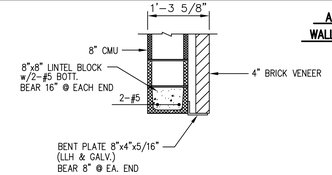 AT 16" EXT. WALL WALL OPENING < = 5'-0"
L2	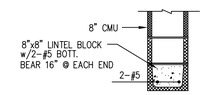 AT 16" INT. WALL WALL OPENING < = 5'-0"
L3	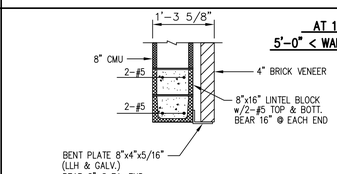 AT 16" EXT. WALL 5'-0" < WALL OPENING < = 7'-0"
L4	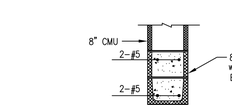 AT 16" INT. WALL 5'-0" < WALL OPENING < = 7'-0"

7 S102 — MASONRY LINTEL SCHEDULE

N.T.S.

(SEE 6/S105 FOR LINTEL L5 (W8X24) DETAILS)

REVISIONS

THE WOOTEN COMPANY
ENGINEERING | PLANNING | ARCHITECTURE
120 North Boylan Avenue Raleigh NC 27603-1423
919.828.0531 fax 919.834.3589
License Number: F-0115

BRUNSWICK REGIONAL WATER AND SEWER AUTHORITY
BRUNSWICK COUNTY NORTH CAROLINA
NEW GROUND WATER SUPPLY AND REVERSE OSMOSIS WATER TREATMENT PLANT
TREATMENT BUILDING SECTIONS AND DETAILS

HMC CONSULTANTS
CONSULTING ENGINEERS
NC LICENSE NO. F-0282
6408 WINTHROP DR. RALEIGH, NORTH CAROLINA
(919) 783-7288 fax (919) 500-7475

DESIGNED BY: MCH
DRAWN BY: RGK
CHECKED BY: MCH
PROJECT NO. 3081-AB
DATE: JUNE, 2020
SCALE: 3/4" = 1'-0"

SHEET 166 OF 181

S105

17102-S105

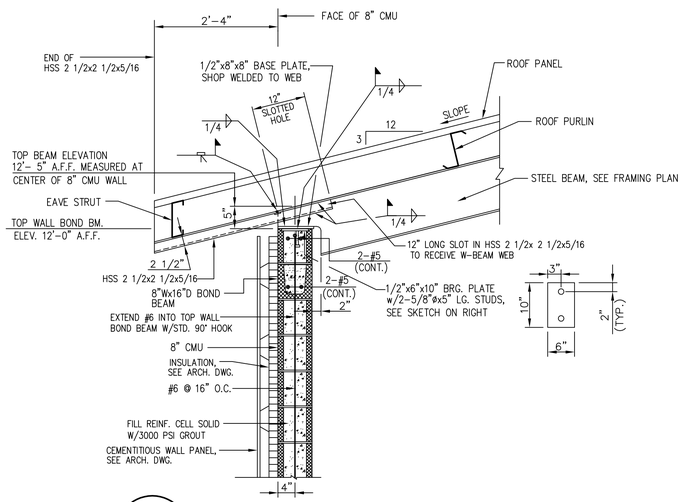

1 S102 TYP. WALL SECTION AT SIDEWALL

SCALE: 3/4" = 1'-0"

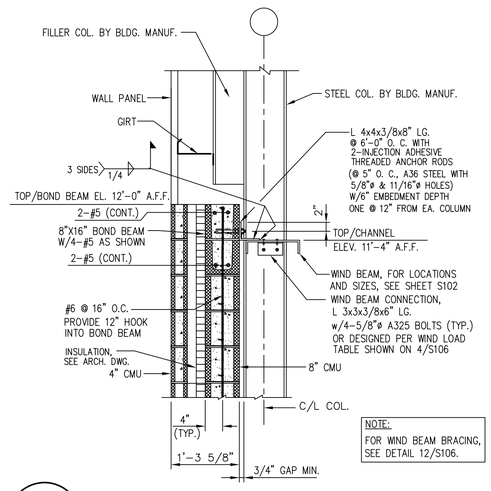

2 S102 TYP. WALL SECTION AT ENDWALL

SCALE: 3/4" = 1'-0"

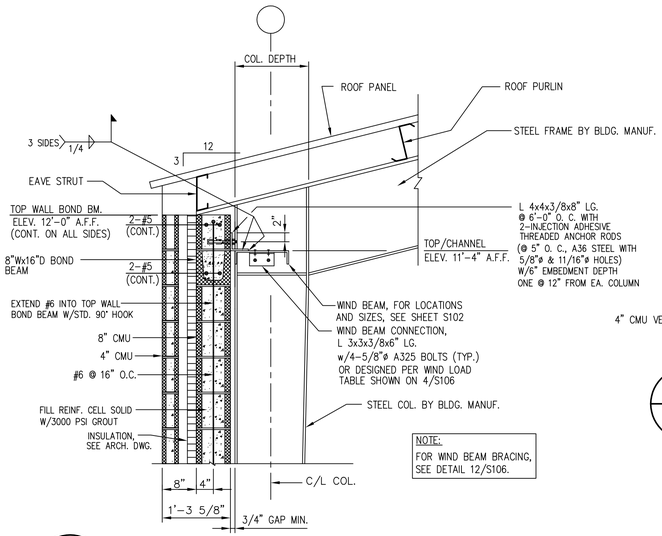

3 S102 TYP. WALL SECTION AT SIDEWALL

SCALE: 3/4" = 1'-0"

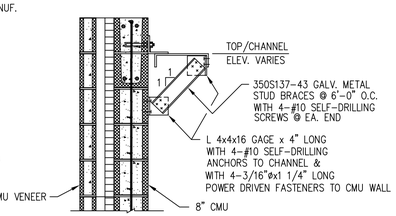

12 S106 TYP. WIND BEAM BRACING

SCALE: 3/4" = 1'-0"

MINIMUM WIND BEAM HORIZONTAL REACTIONS AT COLUMNS		
COLUMN DESIGNATION	WIND BEAM REACTION IN X-DIR. (LONG DIR.)	WIND BEAM REACTION IN Y-DIR. (SHORT DIR.)
F-1, F-4, C-1, C-4		2.5 Kips @ COLUMN
F-2, F-3, C-2, C-3		5.0 Kips @ COLUMN
C-1	3.3 Kips @ COLUMN	
D-1	6.5 Kips @ COLUMN	
E-1	7.5 Kips @ COLUMN	
F-1	4.1 Kips @ COLUMN	
C-4, F-4	2.4 Kips @ COLUMN	
D-4, E-4	4.0 Kips @ COLUMN	

NOTES:

COLUMNS ARE BY PRE-ENGINEERED BLDG. MANUF. DESIGN COLUMNS TO INCLUDE MIN. HORIZONTAL WIND LOADS (WIND BEAM REACTIONS) AS SHOWN IN TABLE ABOVE.

WIND BEAM REACTIONS ARE CALCULATED AT EACH COLUMN WITH WIND REACTIONS FROM BEAMS ON BOTH SIDES OF THE COLUMN.

WIND BEAMS ARE SHOWN ON SHEET S102, WIND BEAM DETAILS ARE SHOWN ON DETAILS 2/S106, 3/S106 & 5/S106.

4 S106 WIND BEAM WIND LOAD REACTION TABLE

SCALE: 3/4" = 1'-0"

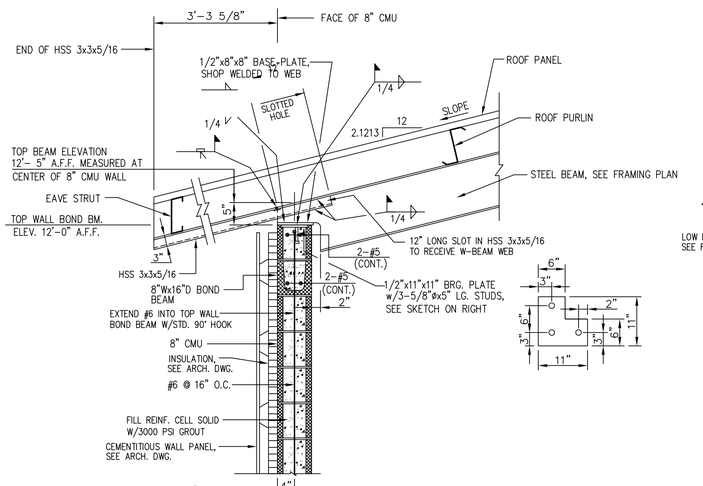

8 S102 SECTION

SCALE: 3/4" = 1'-0"

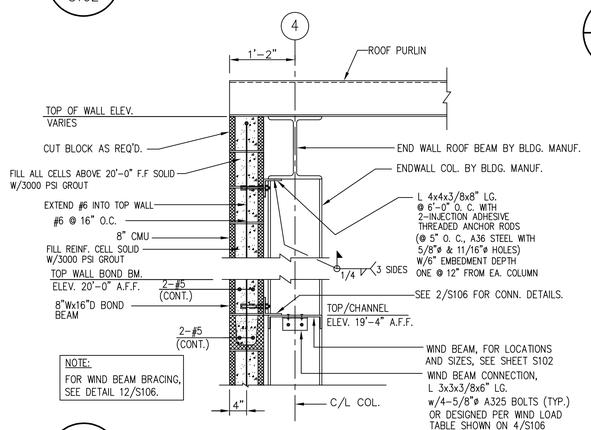

5 S102 SECTION AT HIGH ROOF ENDWALL

SCALE: 3/4" = 1'-0"

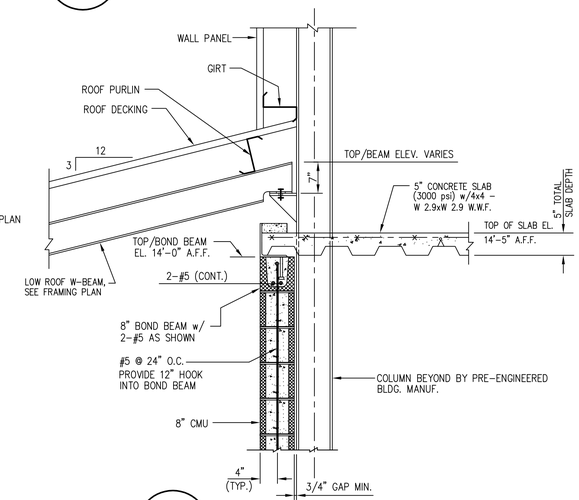

9 S102 SECTION

SCALE: 3/4" = 1'-0"

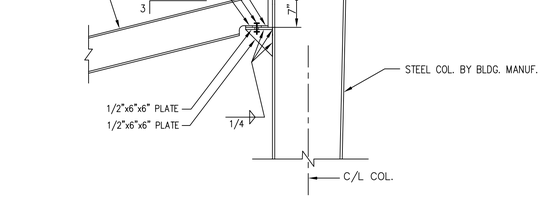

6 S102 TYP. LOW ROOF BEAM TO COLUMN SLIP CONNECTION

SCALE: 3/4" = 1'-0"

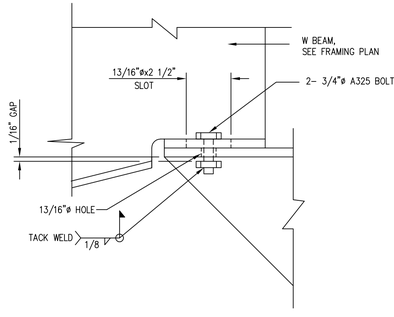

10 S106 DETAIL

SCALE: N.T.S.

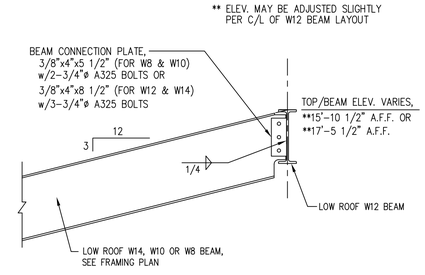

7 S102 TYP. LOW ROOF BEAM TO W12x14 BEAM CONNECTION DETAIL

SCALE: 3/4" = 1'-0"

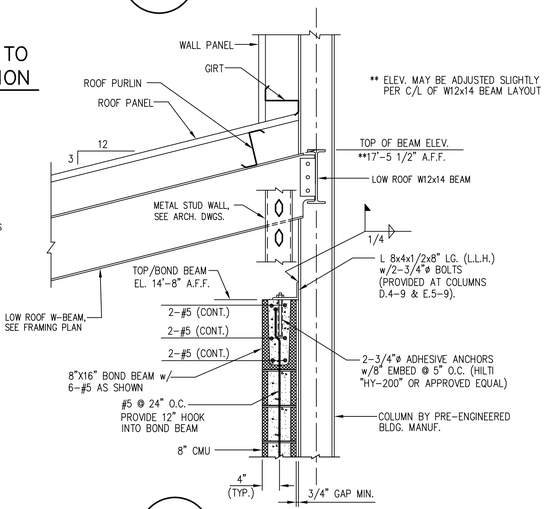

11 S102 SECTION

SCALE: 3/4" = 1'-0"

REVISIONS

THE WOOTEN COMPANY
ENGINEERING | PLANNING | ARCHITECTURE
120 North Boylan Avenue Raleigh NC 27603-1423
919.828.0531 fax 919.834.3589
License Number: F-0115

BRUNSWICK REGIONAL WATER AND SEWER AUTHORITY
BRUNSWICK COUNTY NORTH CAROLINA
NEW GROUND WATER SUPPLY AND REVERSE OSMOSIS WATER TREATMENT PLANT
TREATMENT BUILDING SECTIONS AND DETAILS

HMC CONSULTANTS
CONSULTING ENGINEERS
NC LICENSE NO. F-0282
8408 WINTHROP DR.
RALEIGH, NORTH CAROLINA
(919) 783-7288
(fax (919) 500-7475

DESIGNED BY: MCH
DRAWN BY: RGK
CHECKED BY: MCH
PROJECT NO. 3081-AB
DATE: JUNE, 2020
SCALE: 3/4" = 1'-0"

SHEET 167 OF 181

S106

17102-S106

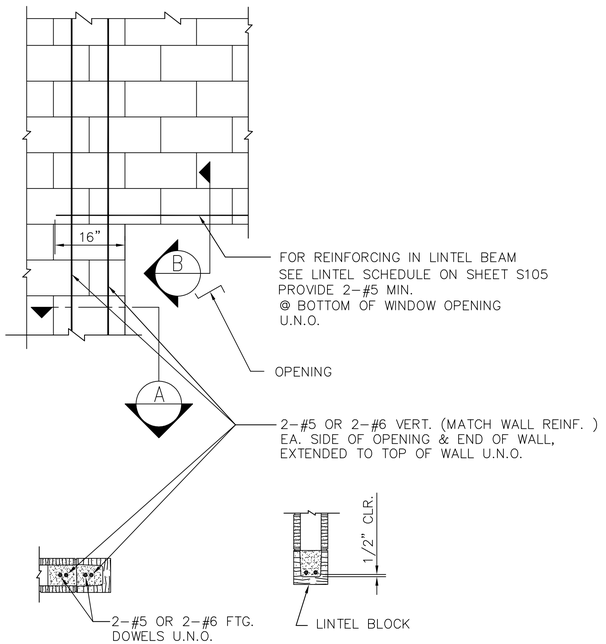

1 S107 TYPICAL WALL REINFORCING AT WINDOW/DOOR OPENING & END OF WALL
N.T.S.

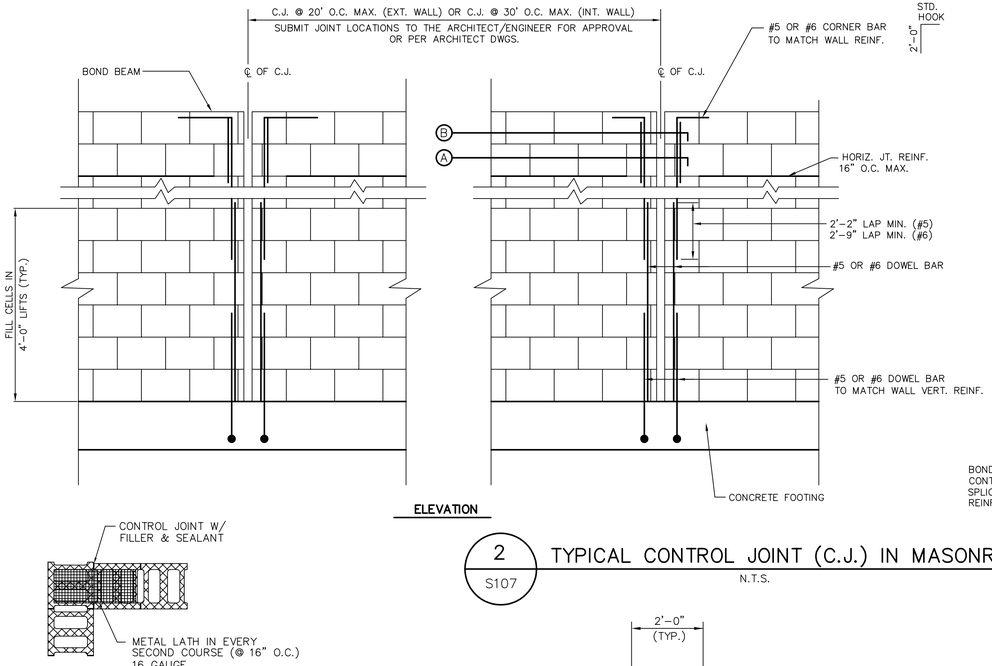

2 S107 TYPICAL CONTROL JOINT (C.J.) IN MASONRY WALLS
N.T.S.

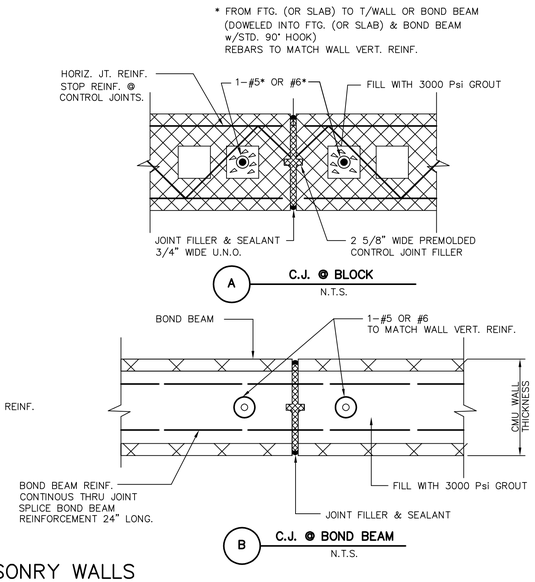

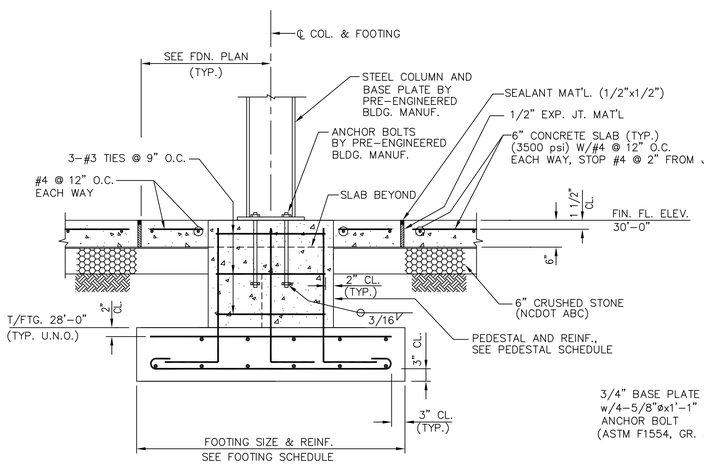

7 S101 SECTION AT INTERIOR COLUMN
SCALE: 3/4" = 1'–0"

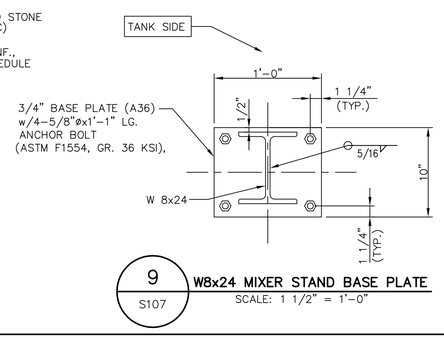

9 S107 W8x24 MIXER STAND BASE PLATE
SCALE: 1 1/2" = 1'–0"

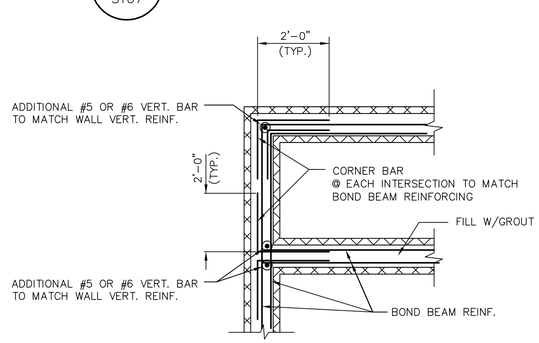

4 S107 TYPICAL BOND BEAM CORNER & INTERSECTION REINF.
N.T.S.

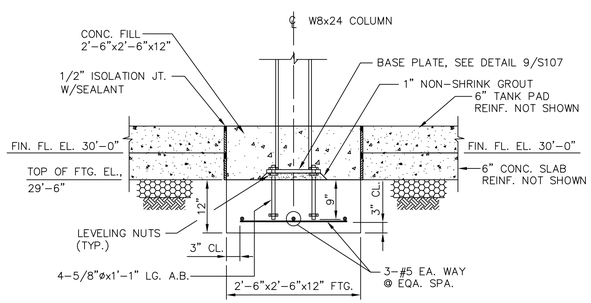

8 S107 TYPICAL SECTION AT MIXER SUPPORT COLUMN
SCALE: N.T.S.
(SEE MECH. DWGS. FOR LOCATIONS OF MIXER STANDS)

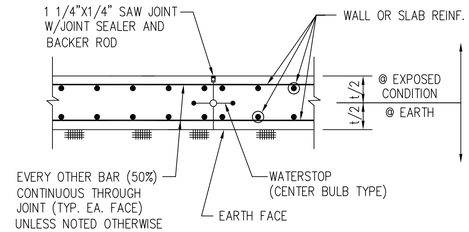

5 S107 TRENCH WALL OR SLAB CONTROL JOINT (C.J.) DETAIL
SCALE: N.T.S.

NOTE: SEE FOUNDATION PLAN FOR LOCATIONS
OF TRENCH CONTROL JOINTS

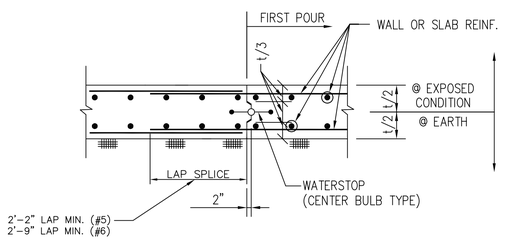

6 S107 TYPICAL CONSTRUCTION JOINT (CONST. JT.) AT SLAB OR WALL
N.T.S.

REVISIONS

THE WOOTENCOMPANY
ENGINEERING | PLANNING | ARCHITECTURE
120 North Boylan Avenue Raleigh NC 27603-1423
919.828.0531 fax 919.834.3589
License Number: F–0115

BRUNSWICK REGIONAL WATER AND SEWER AUTHORITY
BRUNSWICK COUNTY NORTH CAROLINA
NEW GROUND WATER SUPPLY AND
REVERSE OSMOSIS WATER TREATMENT PLANT
TREATMENT BUILDING
SECTIONS AND DETAILS

HMC CONSULTANTS
CONSULTING ENGINEERS
NC LICENSE NO. F–0282
6408 WINTHROP DR.
RALEIGH, NORTH CAROLINA
(919) 783–7288
fax (919) 500–7475

DESIGNED BY:	MCH
DRAWN BY:	RGK
CHECKED BY:	MCH
PROJECT NO.	3081–AB
DATE:	JUNE, 2020
SCALE:	AS NOTED

SHEET 168 OF 181

S107

17102–S107

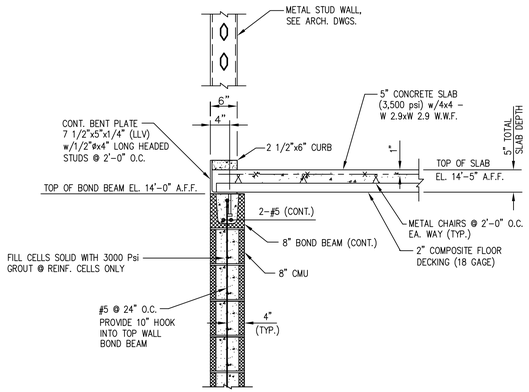

1 S102 SECTION
SCALE: 3/4" = 1'-0"

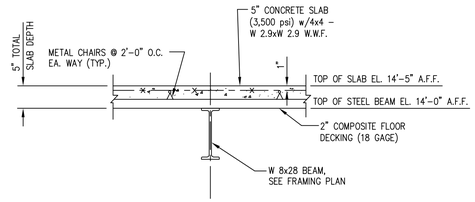

2 S102 SECTION
SCALE: 3/4" = 1'-0"

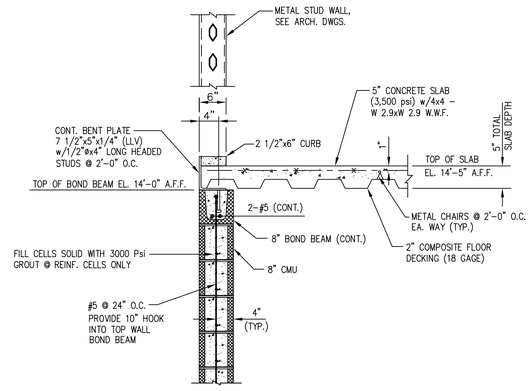

3 S102 SECTION
SCALE: 3/4" = 1'-0"

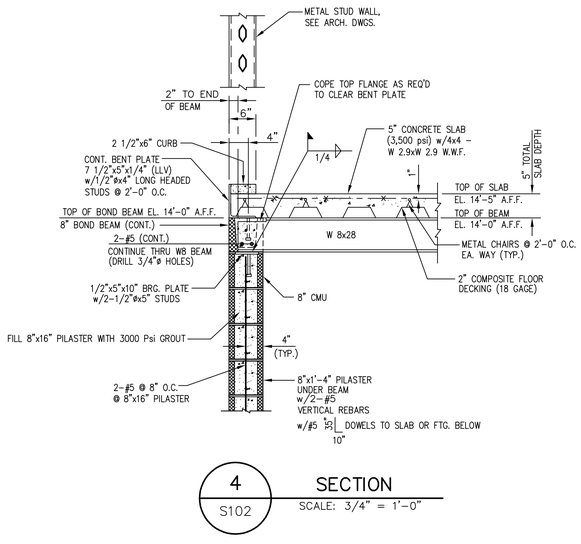

4 S102 SECTION
SCALE: 3/4" = 1'-0"

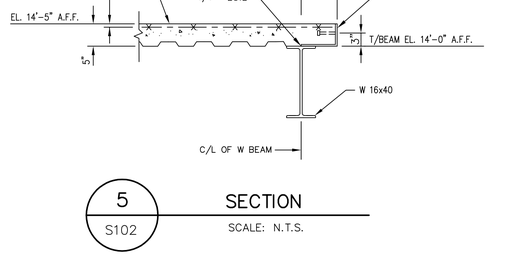

5 S102 SECTION
SCALE: N.T.S.

REVISIONS

THE WOOTEN COMPANY
ENGINEERING | PLANNING | ARCHITECTURE
120 North Boylan Avenue Raleigh NC 27603-1423
919.828.0531 fax 919.834.3589
License Number: F-0115

BRUNSWICK REGIONAL WATER AND SEWER AUTHORITY
BRUNSWICK COUNTY NORTH CAROLINA
NEW GROUND WATER SUPPLY AND REVERSE OSMOSIS WATER TREATMENT PLANT
TREATMENT BUILDING SECTIONS AND DETAILS

HMC CONSULTANTS
CONSULTING ENGINEERS
NC LICENSE NO. F-0282
6405 WINTHROP DR.
RALEIGH, NORTH CAROLINA
(919) 783-7288
fax (919) 500-7475

DESIGNED BY: MCH
DRAWN BY: RGK
CHECKED BY: MCH
PROJECT NO. 3081-AB
DATE: JUNE, 2020
SCALE: 3/4" = 1'-0"

SHEET 169 OF 181

S108

17102-S108

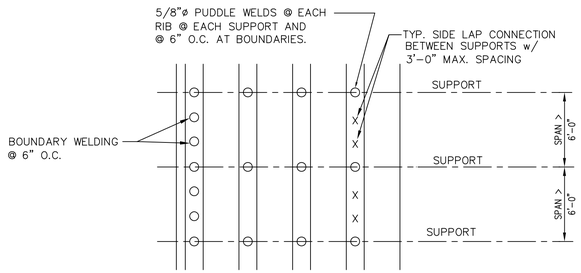

A TYPICAL DECK WELDING PATTERN (PLAN)

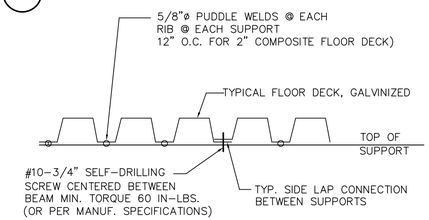

B SECTION AT TYPICAL WELDED DECK CONNECTION

NOTES:

1. EDGES OF SHEET SHALL BE COMPLETELY ENGAGED.
2. DECK SHALL BE GALVANIZED TO CORFORM TO ASTM 653 COATING CLASS G60.

C DECK NOTES

1 / S109 TYPICAL MEZZANINE FLOOR DECK ANCHORAGE

N.T.S.

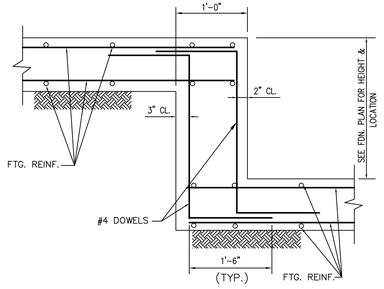

4 / S109 STEP FOOTING DETAIL

SCALE: N.T.S.

2" COMPOSITE FLOOR DECK
w/5" TOTAL SLAB DEPTH (NORMAL WEIGHT, 150 PCF)

DECK GAGE = 18

Ip	= 0.557 in⁴/ft.	(OR APPROVED EQUAL)
In	= 0.557 in⁴/ft.	
Sp	= 0.512 in³/ft.	
Sn	= 0.518 in³/ft.	
Fy	= 40 Ksi	

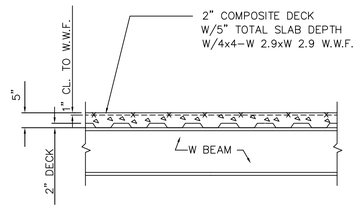

2 / S109 TYPICAL MEZZANINE FLOOR CONSTRUCTION

N.T.S.

NOTES:

1. CONCRETE SHALL BE NORMAL WEIGHT CONCRETE @ 145 P.C.F. CONC. F'c=3.5 K.S.I., REINFORCED WITH 4x4-W 2.9xW 2.9 W.W.F. SUPPORTED ON CHAIRS @ 2'-0" O.C. EA. WAY.

FRAMED BEAM CONNECTION DETAIL

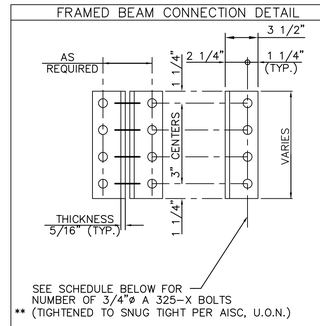

FRAMED BEAM BOLT SCHEDULE

BEAM	NUMBER OF BOLTS IN ONE VERTICAL ROW
W 8, W10	2
W 12, W14	3
W 16, W18	4
W 21, W24	5

3 / S109 TYPICAL BEAM TO BEAM OR BEAM TO COLUMN CONNECTION DETAIL AND SCHEDULE

N.T.S.

REVISIONS

THE WOOTEN COMPANY
ENGINEERING | PLANNING | ARCHITECTURE
120 North Boylan Avenue Raleigh NC 27603-1423
919.828.0531 fax 919.834.3589
License Number: F-0115

BRUNSWICK REGIONAL WATER AND SEWER AUTHORITY
BRUNSWICK COUNTY NORTH CAROLINA
NEW GROUND WATER SUPPLY AND REVERSE OSMOSIS WATER TREATMENT PLANT
TREATMENT BUILDING
TYPICAL DETAILS AND GENERAL NOTES

HMC CONSULTANTS
CONSULTING ENGINEERS
NC LICENSE NO. F-0282
6408 WINTHROP DR.
RALEIGH, NORTH CAROLINA
(919) 783-7288
fax (919) 500-7475

DESIGNED BY:	MCH
DRAWN BY:	RGK
CHECKED BY:	MCH
PROJECT NO.	3081-AB
DATE:	JUNE, 2020
SCALE:	AS NOTED

SHEET 170 OF 181

S109

17102-S109

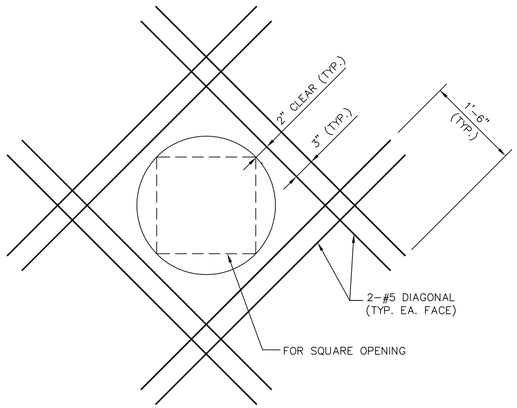

1 / S110 — DETAIL OF ADDITIONAL REINFORCING AT OPENING
N.T.S.

(FOR OPENEING LESS THAN REINF. SPACING)

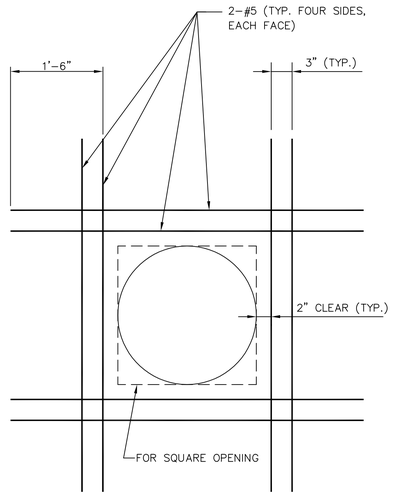

2 / S110 — DETAIL OF ADDITIONAL REINFORCING AT OPENING
N.T.S.

(FOR OPENING GREATER THAN REINF. SPACING)

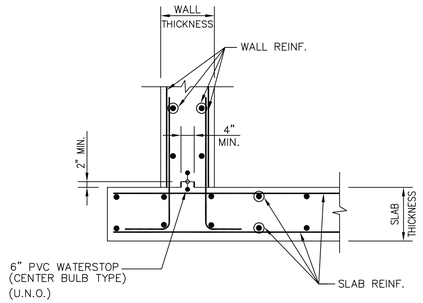

3 / S110 — TYP. WALL TO SLAB CONSTRUCTION JOINT
N.T.S.

4 / S110 — TYPICAL CONCRETE WALL INTERSECTION REINFORCING DETAIL
N.T.S.

5 / S110 — TYP. CONCRETE WALL CORNER REINFORCING DETAIL (U.O.N.)
N.T.S.

2018 NCBC APPENDIX B - STRUCTURAL DESIGN
(FOR ALL STRUCTURES)

DESIGN LOADS:

Importance Factors: Snow (I^s) 1.2; Seismic (I^e) 1.5

Live Loads: Platform 100 psf; Floor (ground) 200 psf

Ground Snow Load: 10 psf

Wind Load: Basic Wind Speed 155 mph (ASCE-7); Exposure Category D

SEISMIC DESIGN CATEGORY: ☐ A ☐ B ☐ C ☒ D

Provide the following Seismic Design Parameters:

Occupancy Category (Table 1604.5) ☐ I ☐ II ☐ III ☒ IV

Spectral Response Acceleration S_s 22.7 %g S_1 9.4 %g

Site Classification (ASCE 7) ☐ A ☐ B ☐ C ☒ D ☐ E ☐ F

Data Source: ☒ Field Test ☐ Presumptive ☐ Historical Data

Basic structural system (check one)

- ☐ Bearing Wall
- ☐ Building Frame
- ☒ Moment Frame
- ☐ Dual w/Special Moment Frame
- ☐ Dual w/Intermediate R/C or Special Steel
- ☐ Inverted Pendulum

Analysis Procedure: ☐ Simplified ☒ Equivalent Lateral Force ☐ Dynamic

Architectural, Mechanical, Components anchored? ☒ Yes ☐ No

LATERAL DESIGN CONTROL: ☐ Earthquake ☒ Wind

SOIL BEARING CAPACITIES:

Field Test (provide copy of test report) 2000 psf

Presumptive Bearing capacity N/A psf

Pile size, type, and capacity N/A

GENERAL NOTES FOR TREATMENT BUILDING

1. ALL SAFETY REGULATIONS ARE TO BE FOLLOWED STRICTLY. METHODS OF CONSTRUCTION AND ERECTION OF THE STRUCTURAL MATERIAL IS CONTRACTOR'S RESPONSIBILITY.

2. DESIGN LOAD : (NORTH CAROLINA BUILDING CODE – 2018)
   BUILDING OCCUPANCY: CATEGORY IV
   A. DEAD LOAD : ACTUAL WEIGHT OF MATERIAL.
   B. LIVE LOAD :
   PLATFORM LIVE LOAD ---------- 100 PSF
   LATERAL WATER PRESSURE ---------- 63 PCF
   LATERAL EARTH PRESSURE ---------- 50 PCF

   FLOOR DESIGN:
   GROUND FLOOR.....200 PSF

   ROOF DESIGN:
   ROOF .....20 PSF
   GROUND SNOW (Pg).....10 PSF, SNOW LOAD IMPORTANCE FACTOR Is = 1.2

   WIND DESIGN:
   BASIC WIND SPEED (3 SECOND GUST) .... 155 MPH (EXPOSURE C)

   SEISMIC DESIGN:
   BUILDING OCCUPANCY: CATEGORY IV , Ie = 1.50
   MAPPED SPECTRAL RESPONSE ACCELERATION Ss = 22.7%G, S1 = 9.4%G
   SPECTRAL RESPONSE ACCELERATION SMS = 36.3%G, SM1 = 22.6%G
   SDS = 24.2%G, SD1 = 15.07%G

   SITE CLASSIFICATION "D"
   SEISMIC DESIGN CATEGORY "D"
   BASIC SEISMIC-FORCE-RESISTING SYSTEM :
   ORDINARY STEEL MOMENT FRAMES AND ORDINARY STEEL CONCENTRICALLY BRACED FRAMES
   ANALYSIS PROCEDURE – EQUIVALENT LATERAL FORCE METHOD.

3. ALLOWABLE SOIL BEARING PRESSURE IS ASSUMED TO BE 2,000 PSF FOR COLUMN AND WALL FOOTINGS AND SHALL BE FIELD INSPECTED AND VERIFIED BY A SOIL ENGINEER.

4. PROVIDE 6" THICK CRUSHED STONE BASE (NCDOT ABC) AS WORKING PLATFORM AT BOTTOM OF FOUNDATION SLABS AND WALL FOOTINGS. FOR STRUCTURAL EXCAVATIONS AT OR BELOW GROUNDWATER LEVEL, A MIN. 12" THICK #57 STONE MAT SHOULD BE USED. THE CRUSHED STONE SHALL BE COMPACTED TO AT LEAST 95% OF ITS MODIFIED PROCTOR MAXIMUM DRY DENSITY.

5. CONCRETE FOR EXTERIOR/INTERIOR SLABS, WALLS, COLUMNS, BEAMS AND FOOTINGS SHALL HAVE A MINIMUM COMPRESSIVE STRENGTH OF 3,500 PSI IN 28 DAYS, EXTERIOR CONCRETE SHALL BE AIR ENTRAINED WITH 6±2% AIR. CONCRETE FOR LIQUID RETAINING STRUCTURES SHALL HAVE A MINIMUM COMPRESSIVE STRENGTH OF 4,500 PSI IN 28 DAYS (U.O.N.) AND SHALL BE AIR ENTRAINED WITH 4 1/2±1 1/2% AIR. ALL OTHER CONCRETE SHALL HAVE A MINIMUM COMPRESSIVE STRENGTH OF 3,000 PSI IN 28 DAYS (U.O.N.).

6. REINFORCING STEEL SHALL CONFORM TO ASTM A615, GRADE 60.

7. WELDED WIRE FABRIC SHALL CONFORM TO ASTM A1064.

8. DETAILING, FABRICATION AND PLACING OF REINFORCING STEEL SHALL BE IN ACCORDANCE WITH ACI 318 AND THE "DETAILS AND DETAILING OF CONCRETE REINFORCEMENT " (ACI 315), LATEST EDITION.

9. ALL REINFORCING STEEL LAPS SHALL BE A MINIMUM OF 40 BAR DIAMETERS (18" MINIMUM), UNLESS OTHERWISE NOTED.

10. PROVIDE HORIZONTAL CORNER BARS AT CORNERS AND INTERSECTIONS OF FOOTINGS AND WALLS. BARS TO BE PLACED AT SPACING AND SIZE TO MATCH LONGITUDINAL BARS. LAP 2'-0" MINIMUM EACH DIRECTION UNLESS OTHERWISE NOTED.

11. USE 3/4" CHAMFER ON ALL EXPOSED CONCRETE EDGE (U.N.O.).

12. ALL STRUCTURAL FILL SHALL BE COMPACTED IN ABOUT 8" LAYERS TO A MINIMUM OF 95% (98% AT UPPER ONE FOOT) OF ITS MAXIMUM DRY DENSITY AT ITS OPTIMUM MOISTURE CONTENT USING THE STANDARD PROCTOR METHOD, ASTM STANDARD D698 AND FIELD CONTROLLED IN ACCORDANCE WITH ASTM SPECIFICATION D 2167 (LATEST EDITION), OR EQUAL. ALL THE COMPACTION OF THE FILL SOIL SHALL BE CARRIED OUT UNDER THE DIRECTION OF A QUALIFIED GEOTECHNICAL ENGINEER.

13. ALL EXPANSION JOINTS SHALL BE AN IMPREGNATED FIBER MATERIAL RECESSED FROM THE SURFACE ONE HALF INCH. UPON COMPLETION OF THE AREA WORK, THE JOINT SHALL BE VACUUMED CLEAN AND POURED FULL OF SELF LEVELING SILKAFLEX-1C SL SEALER, OR APPROVED EQUAL.

14. ALL CONTROL AND CONSTRUCTION JOINTS SHALL BE VACUUMED AND FILLED WITH SEMIRIGID EPOXY WITH SHORE HARDNESS OF A-80 OR D-50 (ASTM D2240).

15. TREATMENT BUILDING COLUMN FOOTING DESIGN IS BASED ON THE PRELIMINARY COLUMN REACTIONS. FINAL COLUMN REACTIONS FROM THE BUILDING MANUFACTURER SHALL BE REVIEWED BY THE ENGINEER TO ASSURE THAT THE COLUMN FOOTING AND PEDESTAL SIZES AND DETAILS AS SHOWN ON THE PLANS SATISFY THE FINAL DESIGN REACTIONS. ANY NECESSARY CHANGES IN FOUNDATION DETAILS SHALL BE PROVIDED TO THE CONTRACTOR BY THE ENGINEER FOR INCORPORATION AT NO ADDITIONAL COST TO THE OWNER.

16. USE MECHANICAL VIBRATOR TO CONSOLIDATE CONCRTETE FOR ALL CONCRETE POURS INCLUDING SLABS.

REINFORCED MASONRY

1. CONCRETE MASONRY UNIT SHALL CONFORM TO ASTM C-90, GRADE N-1. CMU BLOCK FOR WALL SHALL BE 8" CMU WITH 1,500 PSI ULTIMATE COMPRESSIVE STRENGTH F'M. MORTAR SHOULD BE TYPE S WITH COMPRESSIVE STRENGTH OF 1,800 PSI. AT 28 DAYS.

2. REINFORCING GRADE AND DETAILS SHALL BE AS FOR REINFORCED CONCRETE, TIE REINFORCEMENT IN POSITION AND PLACE CONCRETE AROUND REINFORCING BARS DURING CONSTRUCTION OF MASONRY. DO NOT PUSH REINFORCING DOWN INTO PREVIOUSLY PLACED CONCRETE FILL.

3. PROVIDE HORIZONTAL JOINT REINFORCING AT 16" ON CENTERS U.O.N.

4. GROUT FOR USE IN MASONRY WALL SHALL CONFORM TO ASTM C476 WITH A MINIMUM COMPRESSIVE STRENGTH OF 3,000 PSI AT 28 DAYS. GROUT MIX SHALL HAVE 1/4" MAXIMUM SIZE AGGREGATE WITH A MAXIMUM SLUMP OF 6".

5. ALL MASONRY IS TO BE LAID IN A RUNNING BOND PATTERN.

6. USE VIBRATOR TO CONSOLIDATE GROUT IN BLOCK WALL FILLING OPERATION.

STRUCTURAL STEEL

1. ALL STEEL DETAILS AND CONNECTION SHALL BE IN ACCORDANCE WITH THE REQUIREMENT OF THE LATEST A. I. S. C. STEEL CONSTRUCTION MANUAL – 13th EDITION.

2. ALL WELDING SHALL BE PERFORMED BY CERTIFIED WELDERS IN ACCORDANCE WITH A.W.S. SPECIFICATIONS, LATEST EDITION. ALL WELDING ELECTRODES SHALL CONFORM TO A.W.S. A.1, GRADE E-70. BAR ELECTRODES AND GRANULAR FLUX SHALL CONFORM TO A.W.S. A.17, F-70, A.W.S. FLUX CLASSIFICATIONS.

3. ALL BEAMS OR W-COLUMNS SHALL BE ASTM A-992 OR A-572, FY = 50 K.S.I.
   ALL CHANNELS, ANGLES AND OTHER PLATES SHALL BE ASTM A-36, FY = 36 K.S.I.
   ALL MISCELLANEOUS STEEL SHALL BE ASTM A-36, FY = 36 K.S.I.

4. ALL TUBE MEMBERS SHALL BE ASTM A-500 GRADE B, FY = 46 K.S.I.

5. ALL STEEL MEMBERS SHALL BE PRIMED AND PAINTED (U.O.N.) AND SHALL BE CLEANED OF OIL, GREASE, DIRT, RUST AND LOOSE MILL SCALE, ETC., AND ALL OTHER FOREIGN MATERIALS.

6. ALL BOLTED CONNECTIONS FOR STRUCTURAL STEEL SHALL BE 3/4" DIAMETER A325-X BOLTS (U.N.O.) TIGHTENED TO THE SNUG TIGHT.

MISCELLANEOUS

1. SHOP DRAWINGS. CONTRACTORS SHALL SUBMIT SHOP DRAWINGS FOR METAL BUILDING DESIGN AND CALCULATIONS, REINFORCING STEEL AND STRUCTURAL STEEL TO THE STRUCTURAL ENGINEER FOR REVIEW AND APPROVAL BEFORE FABRICATION.

2. THE CONTRACTOR SHALL BE RESPONSIBLE FOR CHECKING AND COORDINATING ALL DIMENSIONS WITH DRAWINGS OF OTHER TRADES. IN CASE OF CONFLICT, THE ENGINEER SHOULD BE NOTIFIED BEFORE CONSTRUCTION BEGIN.

REVISIONS

THE WOOTEN COMPANY
ENGINEERING | PLANNING | ARCHITECTURE
120 North Boylan Avenue Raleigh NC 27603-1423
919.828.0531 fax 919.834.3589
License Number: F-0115

BRUNSWICK REGIONAL WATER AND SEWER AUTHORITY
BRUNSWICK COUNTY NORTH CAROLINA
NEW GROUND WATER SUPPLY AND REVERSE OSMOSIS WATER TREATMENT PLANT
TREATMENT BUILDING
TYPICAL DETAILS AND GENERAL NOTES

HMC CONSULTANTS
CONSULTING ENGINEERS
NC LICENSE NO. F-0282
6406 WINTHROP DR.
RALEIGH, NORTH CAROLINA
(919) 783-7288
fax (919) 500-7475

DESIGNED BY:	MCH
DRAWN BY:	RGK
CHECKED BY:	MCH
PROJECT NO.	3081-AB
DATE:	JUNE, 2020
SCALE:	AS NOTED

SHEET 171 OF 181

S110

17102-S110

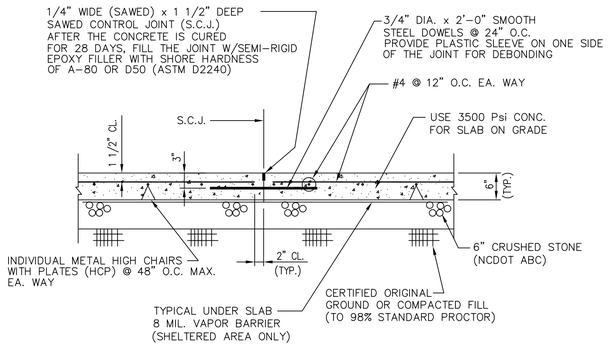

NOTE: 1) USE VAPOUR BARRIER UNDER SLAB INSIDE BLDG ONLY.

5 / S120 — TYPICAL 6" SLAB WITH SAWED CONTROL JOINT (S.C.J.) DETAIL

SCALE: 3/4" = 1'-0"

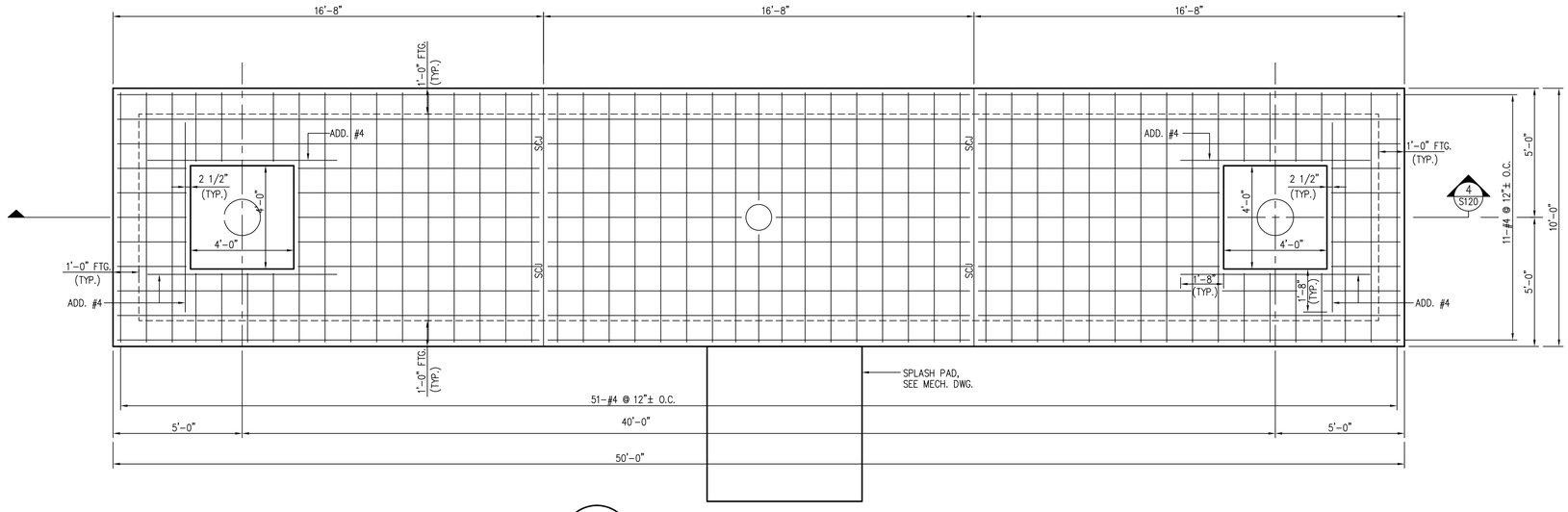

3 / S120 — FOUNDATION PLAN – WELL HEADS

SCALE: 3/8" = 1'-0"

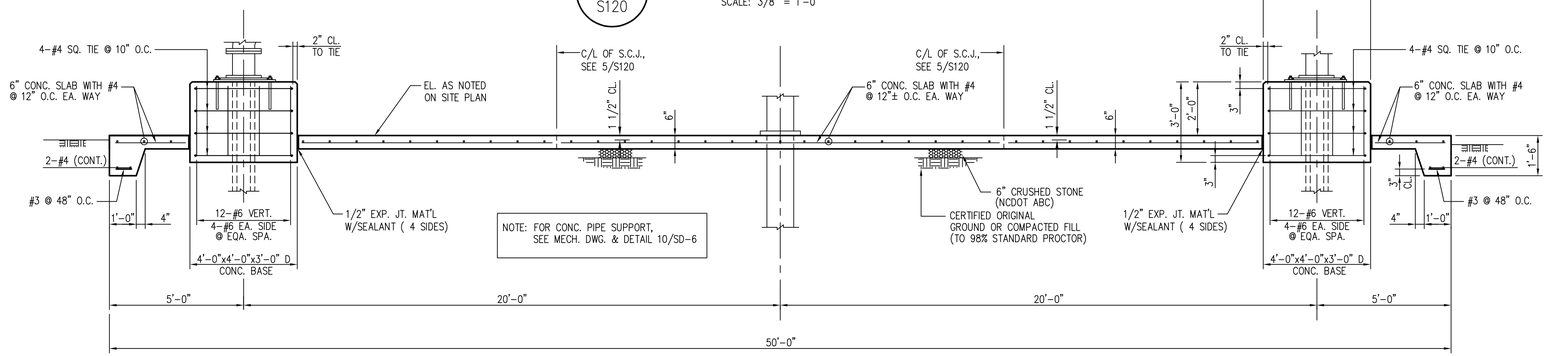

4 / S120 — SECTION

SCALE: 3/8" = 1'-0"

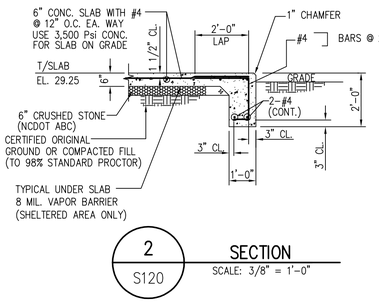

2 / S120 — SECTION

SCALE: 3/8" = 1'-0"

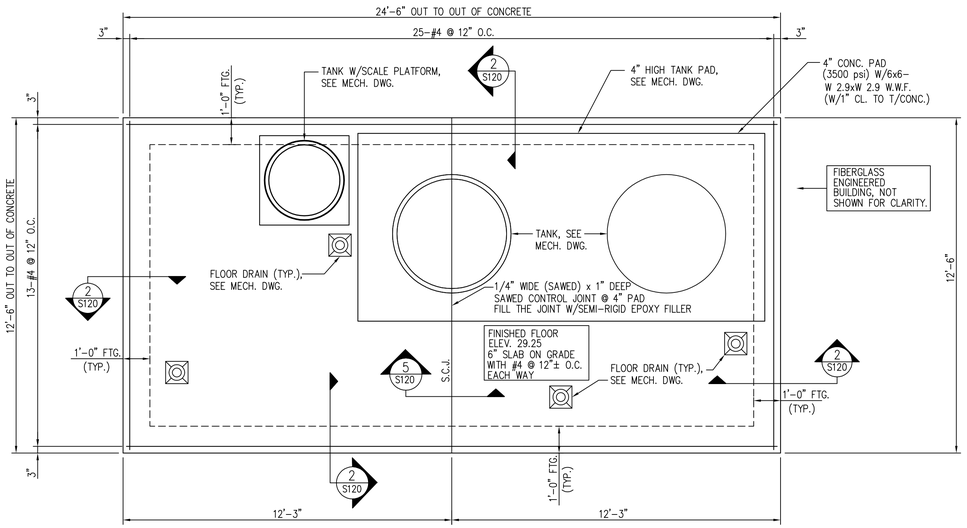

1 / S120 — FOUNDATION PLAN – FLOURIDE BUILDING

SCALE: 3/8" = 1'-0"

NOTE:
SEE S110 FOR GENERAL NOTES.

REVISIONS

THE WOOTEN COMPANY
ENGINEERING | PLANNING | ARCHITECTURE
120 North Boylan Avenue Raleigh NC 27603-1423
919.828.0531 fax 919.834.3589
License Number: F-0115

BRUNSWICK REGIONAL WATER AND SEWER AUTHORITY
BRUNSWICK COUNTY NORTH CAROLINA
NEW GROUND WATER SUPPLY AND REVERSE OSMOSIS WATER TREATMENT PLANT
FLOURIDE BUILDING AND WELL HEADS FOUNDATION PLANS AND SECTIONS

HMC CONSULTANTS
CONSULTING ENGINEERS
NC LICENSE NO. F-0282
6408 WINTHROP DR
RALEIGH, NORTH CAROLINA
(919) 787-7288
fax (919) 500-7475

DESIGNED BY:	MCH
DRAWN BY:	RGK
CHECKED BY:	MCH
PROJECT NO.	3081-AB
DATE:	JUNE, 2020
SCALE:	AS NOTED

SHEET 172 OF 181

S120

17102-S120

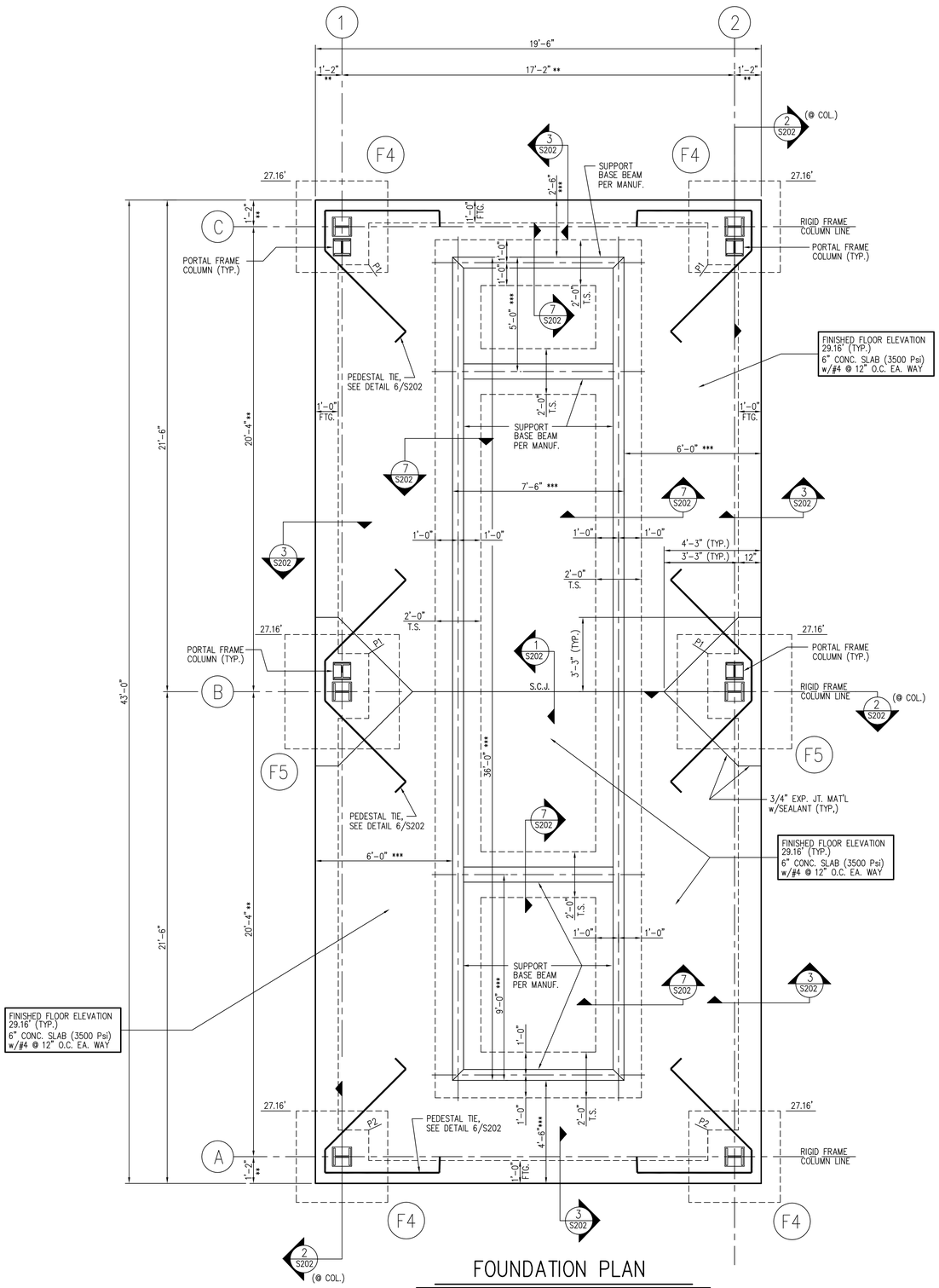

FOUNDATION PLAN

SCALE: 3/8" = 1'-0"

** DIMENSIONS MAY BE ADJUSTED SLIGHTLY BY PRE-ENGINEERED BUILDING MANUFACTURER.

*** DIMENSIONS TO BE VERIFIED WITH MANUFACTURER.

PEDESTAL SCHEDULE	
TYPE	SIZE AND REINFORCEMENT
P1	34"x28" CIP CONC. (3500 Psi) W/8-#7 DOWELS & 3-#3 TIES @ 9" O.C.
P2	28"x28" CIP CONC. (3500 Psi) W/8-#7 DOWELS & 3-#3 TIES @ 9" O.C.

FOOTING SCHEDULE				
MARK	SIZE	DEPTH	BOTTOM REINFORCEMENT	TOP REINFORCEMENT
F4	4'-0"x4'-0"	12"	5-#5 @ EQA. SPA. E.W.	5-#4 @ EQA. SPA. E.W.
F5	5'-0"x5'-0"	12"	6-#5 @ EQA. SPA. E.W.	6-#4 @ EQA. SPA. E.W.

GENERAL NOTES

GENERAL

1. ALL SAFETY REGULATIONS ARE TO BE FOLLOWED STRICTLY. METHODS OF CONSTRUCTION AND ERECTION OF THE STRUCTURAL MATERIAL IS CONTRACTOR'S RESPONSIBILITY.

2. DESIGN LOAD : (NORTH CAROLINA BUILDING CODE-2018)
   BUILDING OCCUPANCY: CATEGORY IV
   A. DEAD LOAD : ACTUAL WEIGHT OF MATERIAL.
   B. LIVE LOAD : ROOF .....20 PSF
   SNOW .....10 PSF, Is = 1.2
   FLOOR .....200 PSF
   BASIC WIND SPEED ...155 MPH (EXPOSURE C)

   SEISMIC DESIGN:
   BUILDING OCCUPANCY: CATEGORY IV , Ie = 1.50
   MAPPED SPECTRAL RESPONSE ACCELERATION Ss = 22.7%G, S1 = 9.4%G
   SPECTRAL RESPONSE ACCELERATION SMS = 36.3%G, SM1 = 22.6%G
   SDS = 24.2%G, SD1 = 15.07%G
   SITE CLASSIFICATION "D"
   SEISMIC DESIGN CATEGORY "D"

3. ALLOWABLE SOIL BEARING PRESSURE IS ASSUMED TO BE 2,000 PSF FOR COLUMN FOOTINGS AND FOR WALL FOOTINGS AND SHALL BE FIELD INSPECTED AND VERIFIED BY A SOIL ENGINEER.
4. CENTER ALL FOOTINGS UNDER THEIR RESPECTIVE COLUMNS.
5. FOOTINGS SHALL BE CARRIED TO A LOWER ELEVATION THAN THAT SHOWN ON DRAWINGS IF NECESSARY TO REACH FIRM GROUND.
6. COLUMN FOOTING DESIGN IS BASED ON THE PRELIMINARY COLUMN REACTIONS. FINAL COLUMN REACTIONS FROM THE BUILDING MANUFACTURER SHALL BE REVIEWED BY THE ENGINEER TO ASSURE THAT THE COLUMN FOOTING AND PEDESTAL SIZES AND DETAILS AS SHOWN ON THE PLANS SATISFY THE FINAL DESIGN REACTIONS. ANY NECESSARY CHANGES IN FOUNDATION DETAILS SHALL BE PROVIDED TO THE CONTRACTOR BY THE ENGINEER FOR INCORPORATION AT NO ADDITIONAL COST TO THE OWNER.
7. ALL CONCRETE SHALL HAVE A MINIMUM COMPRESSIVE STRENGTH OF 3,500 PSI IN 28 DAYS (U.O.N.). EXTERIOR CONCRETE SHALL BE AIR ENTRAINED WITH 5 ±1% AIR.
8. REINFORCING STEEL SHALL CONFORM TO ASTM A615, GRADE 60.
9. ALL EXPOSED CONCRETE EDGES TO HAVE 3/4" CHAMFERS (U.O.N.).
10. DETAILING, FABRICATION AND PLACING OF REINFORCING STEEL SHALL BE IN ACCORDANCE WITH ACI 318 AND THE "DETAILS AND DETAILING OF CONCRETE REINFORCEMENT " (ACI 315), LATEST EDITION.
11. ALL REINFORCING STEEL LAPS SHALL BE A MINIMUM OF 36 BAR DIAMETERS (18" MINIMUM), UNLESS OTHERWISE NOTED.
12. PROVIDE HORIZONTAL CORNER BARS AT CORNERS AND INTERSECTIONS OF FOOTINGS. BARS TO BE PLACED AT SPACING AND SIZE TO MATCH LONGITUDINAL BARS. LAP 1'-6" EACH DIRECTION.
13. SUBMIT SHOP DRAWINGS FOR REINFORCING STEEL, METAL BUILDING DESIGN CALCULATIONS AND DRAWINGS TO THE ENGINEER FOR REVIEW BEFORE FABRICATION.
14. ALL CONTROL AND CONSTRUCTION JOINTS SHALL BE VACUUMED AND FILLED WITH SEMIRIGID EPOXY WITH SHORE HARDNESS OF A-80 OR D-50 (ASTM D2240) FOR SLABS. SEALANT SHALL BE APPLIED TO A BACKER ROD.
15. PROVIDE 8 MIL. VAPOR BARRIER (U.O.N.) UNDER CONC. SLAB, TYPICAL FOR SHELTERED AREA.
16. USE MECHANICAL VIBRATOR TO CONSOLIDATE CONCRTETE FOR ALL CONCRETE POURS INCLUDING SLABS.
17. THE CONTRACTOR SHALL BE RESPONSIBLE FOR CHECKING AND COORDINATING ALL DIMENSIONS WITH DRAWINGS OF OTHER TRADES. IN CASE OF CONFLICT, THE ENGINEER SHOULD BE NOTIFIED BEFORE CONSTRUCTION BEGINS.

LEGEND

1. S.C.J. - INDICATES SLAB SAWED CONTROL JOINTS.
2. P1 — INDICATES SIZES OF PEDESTAL (SEE PEDESTAL SCHEDULE).
   F5 — INDICATES FOOTING TYPE (SEE FOOTING SCHEDULE FOR SIZE AND REINFORCEMENT).
   H — INDICATES COLUMN FOOTING.
   28'-0" — INDICATES TOP OF FOOTING ELEVATION.
3. 1 / S202 — LABEL IDENTIFICATION; SECTION & DETAIL NOTATION; SHEET NO. APPEARING ON
4. T.S. - INDICATES THICKENED SLAB.

REVISIONS

THE WOOTEN COMPANY
ENGINEERING | PLANNING | ARCHITECTURE
120 North Boylan Avenue Raleigh NC 27603-1423
919.828.0531 fax 919.834.3589
License Number: F-0115

BRUNSWICK REGIONAL WATER AND SEWER AUTHORITY
BRUNSWICK COUNTY NORTH CAROLINA
NEW GROUND WATER SUPPLY AND REVERSE OSMOSIS WATER TREATMENT PLANT
CO_2 SYSTEM AND BUILDING
FOUNDATION PLAN & GENERAL NOTES

HMC CONSULTANTS
CONSULTING ENGINEERS
NC LICENSE NO. F-0282
6408 WINTHROP DR.
RALEIGH, NORTH CAROLINA
(919) 783-7288
fax (919) 500-7475

DESIGNED BY: MCH
DRAWN BY: RGK
CHECKED BY: MCH
PROJECT NO. 3081-AB
DATE: JUNE, 2020
SCALE: 3/8" = 1'-0"

SHEET 173 OF 181

S201

17102-S201

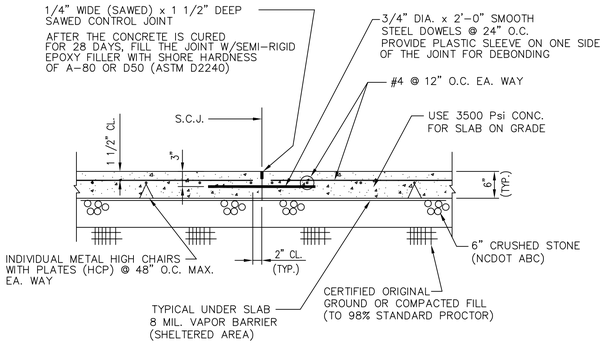

NOTE: 1) USE VAPOUR BARRIER UNDER SLAB INSIDE BLDG ONLY.

1 S201 TYPICAL 6" SLAB DETAIL

SCALE: 3/4" = 1'-0"

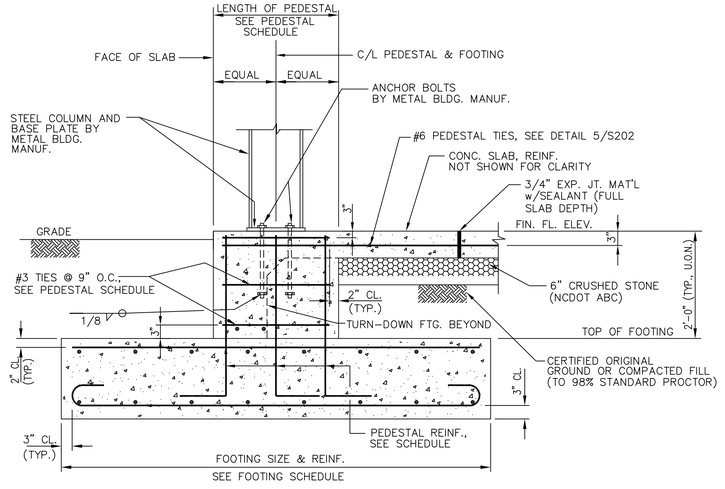

NOTE: CONTINUE TURN-DOWN FTG. REINF. THRU PEDESTAL

2 S201 SECTION

SCALE: N.T.S.

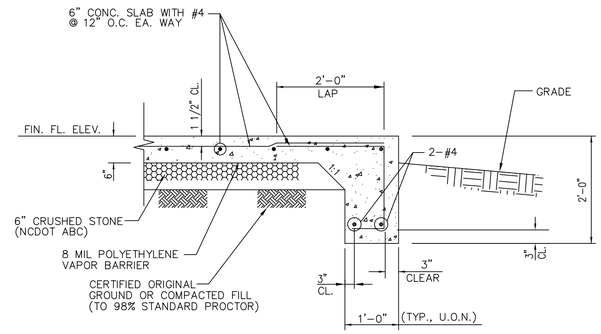

3 S201 SECTION

SCALE: 3/4" = 1'-0"

4 S201 PEDESTAL DETAIL (P2)

NOT TO SCALE

5 S201 PEDESTAL DETAIL (P1)

NOT TO SCALE

TYPICAL CONFIGURATION

CORNER CONFIGURATION

6 S201 PEDESTAL TIE DETAIL

NOT TO SCALE

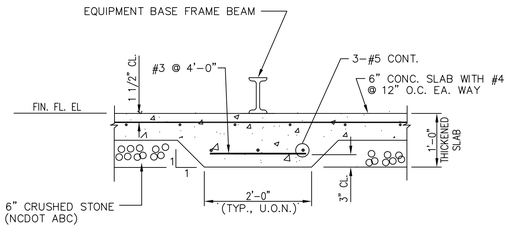

7 S201 SECTION AT 12" THICKENED SLAB

NOT TO SCALE

REVISIONS

THE WOOTENCOMPANY
ENGINEERING | PLANNING | ARCHITECTURE
120 North Boylan Avenue Raleigh NC 27603-1423
919.828.0531 fax 919.834.3589
License Number: F-0115

BRUNSWICK REGIONAL WATER AND SEWER AUTHORITY
BRUNSWICK COUNTY NORTH CAROLINA
NEW GROUND WATER SUPPLY AND REVERSE OSMOSIS WATER TREATMENT PLANT
CO_2 SYSTEM AND BUILDING SECTIONS AND DETAILS

HMC CONSULTANTS
CONSULTING ENGINEERS
NC LICENSE NO. F-0282
6408 WINTHROP DR
RALEIGH, NORTH CAROLINA
(919) 783-7288
fax (919) 500-7475

DESIGNED BY: MCH
DRAWN BY: RGK
CHECKED BY: MCH
PROJECT NO. 3081-AB
DATE: JUNE, 2020
SCALE: 3/4" = 1'-0"

SHEET 174 OF 181

S202

17102-S202

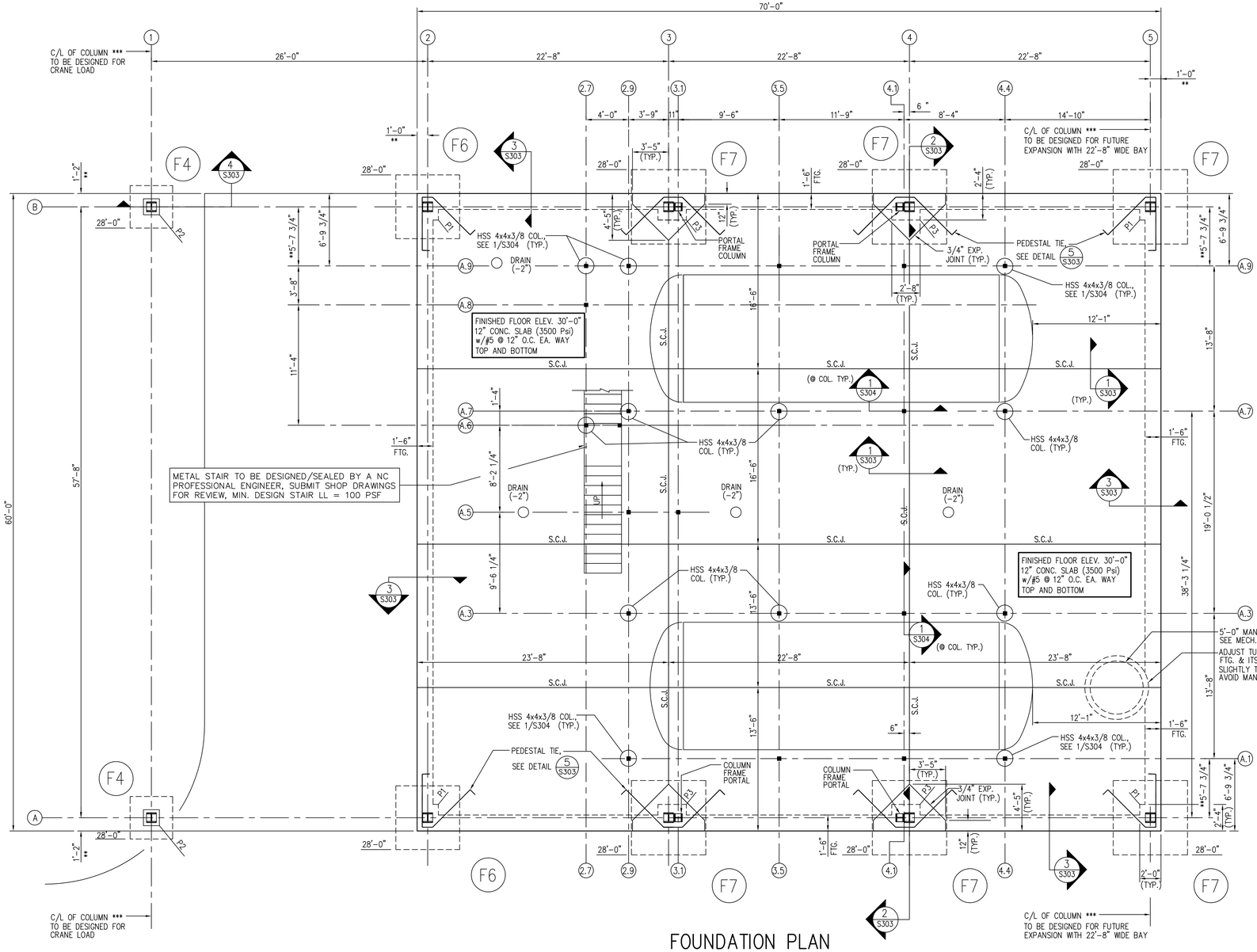

FOUNDATION PLAN

SCALE: 3/16" = 1'-0"

GENERAL NOTES

GENERAL

1. ALL SAFETY REGULATIONS ARE TO BE FOLLOWED STRICTLY. METHODS OF CONSTRUCTION AND ERECTION OF THE STRUCTURAL MATERIAL IS CONTRACTOR'S RESPONSIBILITY.
2. DESIGN LOAD : (NORTH CAROLINA BUILDING CODE–2018)
   BUILDING OCCUPANCY: CATEGORY IV
   A. DEAD LOAD : ACTUAL WEIGHT OF MATERIAL.
   B. LIVE LOAD : ROOF .....20 PSF
   PLATFORM.....100 PSF
   SNOW .....10 PSF, Is = 1.2
   FLOOR .....200 PSF
   BASIC WIND SPEED ...155 MPH (EXPOSURE C)

   SEISMIC DESIGN:
   BUILDING OCCUPANCY: CATEGORY IV , Ie = 1.50
   MAPPED SPECTRAL RESPONSE ACCELERATION Ss = 22.7%G, S1 = 9.4%G
   SPECTRAL RESPONSE ACCELERATION SMS = 36.3%G, SM1 = 22.6%G
   SDS = 24.2%G, SD1 = 15.07%G
   SITE CLASSIFICATION "D"
   SEISMIC DESIGN CATEGORY "D"
3. ALLOWABLE SOIL BEARING PRESSURE IS ASSUMED TO BE 2,000 PSF FOR COLUMN FOOTINGS AND FOR WALL FOOTINGS AND SHALL BE FIELD INSPECTED AND VERIFIED BY A SOIL ENGINEER.
4. CENTER ALL FOOTINGS UNDER THEIR RESPECTIVE COLUMNS.
5. FOOTINGS SHALL BE CARRIED TO A LOWER ELEVATION THAN THAT SHOWN ON DRAWINGS IF NECESSARY TO REACH FIRM GROUND.
6. COLUMN FOOTING DESIGN IS BASED ON THE PRELIMINARY COLUMN REACTIONS. FINAL COLUMN REACTIONS FROM THE BUILDING MANUFACTURER SHALL BE REVIEWED BY THE ENGINEER TO ASSURE THAT THE COLUMN FOOTING AND PEDESTAL SIZES AND DETAILS AS SHOWN ON THE PLANS SATISFY THE FINAL DESIGN REACTIONS. ANY NECESSARY CHANGES IN FOUNDATION DETAILS SHALL BE PROVIDED TO THE CONTRACTOR BY THE ENGINEER FOR INCORPORATION AT NO ADDITIONAL COST TO THE OWNER.
7. ALL CONCRETE SHALL HAVE A MINIMUM COMPRESSIVE STRENGTH OF 3,500 PSI IN 28 DAYS (U.O.N.). EXTERIOR CONCRETE SHALL BE AIR ENTRAINED WITH 5 ±1% AIR.
8. REINFORCING STEEL SHALL CONFORM TO ASTM A615, GRADE 60.
9. ALL EXPOSED CONCRETE EDGES TO HAVE 3/4" CHAMFERS (U.O.N.).
10. DETAILING, FABRICATION AND PLACING OF REINFORCING STEEL SHALL BE IN ACCORDANCE WITH ACI 318 AND THE "DETAILS AND DETAILING OF CONCRETE REINFORCEMENT " (ACI 315), LATEST EDITION.
11. ALL REINFORCING STEEL LAPS SHALL BE A MINIMUM OF 36 BAR DIAMETERS (18" MINIMUM), UNLESS OTHERWISE NOTED.
12. PROVIDE HORIZONTAL CORNER BARS AT CORNERS AND INTERSECTIONS OF FOOTINGS. BARS TO BE PLACED AT SPACING AND SIZE TO MATCH LONGITUDINAL BARS. LAP 1'–6" EACH DIRECTION.
13. SUBMIT SHOP DRAWINGS FOR REINFORCING STEEL, METAL BUILDING DESIGN CALCULATIONS AND DRAWINGS TO THE ENGINEER FOR REVIEW BEFORE FABRICATION.
14. ALL CONTROL AND CONSTRUCTION JOINTS SHALL BE VACUUMED AND FILLED WITH SEMIRIGID EPOXY WITH SHORE HARDNESS OF A–80 OR D–50 (ASTM D2240) FOR SLABS. SEALANT SHALL BE APPLIED TO A BACKER ROD.
15. PROVIDE 8 MIL. VAPOR BARRIER (U.O.N.) UNDER CONC. SLAB, TYPICAL FOR SHELTERED AREA.
16. USE MECHANICAL VIBRATOR TO CONSOLIDATE CONCRTETE FOR ALL CONCRETE POURS INCLUDING SLABS.
17. THE CONTRACTOR SHALL BE RESPONSIBLE FOR CHECKING AND COORDINATING ALL DIMENSIONS WITH DRAWINGS OF OTHER TRADES. IN CASE OF CONFLICT, THE ENGINEER SHOULD BE NOTIFIED BEFORE CONSTRUCTION BEGIN.

PEDESTAL SCHEDULE	
TYPE	SIZE AND REINFORCEMENT
P1	24"x28" CIP CONC. (3500 Psi) W/8–#7 DOWELS & 3–#3 TIES @ 9" O.C.
P2	18"x18" CIP CONC. (3500 Psi) W/8–#6 DOWELS & #3 TIES @ 10" O.C.
P3	32"x28" CIP CONC. (3500 Psi) W/8–#7 DOWELS & #3 TIES @ 9" O.C.

*** NOTE:

COLUMNS TO BE DESIGNED AS RIGID FRAME CLEAR SPAN COLUMNS.

** NOTE:

DIMENSIONS MAY BE ADJUSTED SLIGHTLY BY PRE–ENGINEERED BUILDING MANUFACTURER.

NOTE:

ALL COLUMNS ARE TO BE DESIGNED TO SUPPORT A CRANE LOAD OF 2 TONS (4,000 POUNDS) MIN.

FOOTING SCHEDULE				
MARK	SIZE	DEPTH	BOTTOM REINFORCEMENT	TOP REINFORCEMENT
F4	4'–0"x4'–0"	12"	5–#5 @ EQA. SPA. E.W.	NONE
F6	6'–0"x6'–0"	12"	7–#5 @ EQA. SPA. E.W.	7–#4 @ EQA. SPA. E.W.
F7	7'–0"x7'–0"	15"	8–#6 @ EQA. SPA. E.W.	8–#4 @ EQA. SPA. E.W.

LEGEND

1. S.C.J. – INDICATES SLAB SAWED CONTROL JOINTS.
2. P1 — INDICATES SIZES OF PEDESTAL (SEE PEDESTAL SCHEDULE).
   F7 — INDICATES FOOTING TYPE (SEE FOOTING SCHEDULE FOR SIZE AND REINFORCEMENT).
   H — INDICATES COLUMN FOOTING.
   28'–0" — INDICATES TOP OF FOOTING ELEVATION.
3. 1 / S303 — LABEL IDENTIFICATION / SECTION & DETAIL NOTATION / SHEET NO. APPEARING ON

REVISIONS

THE WOOTENCOMPANY
ENGINEERING | PLANNING | ARCHITECTURE
120 North Boylan Avenue Raleigh NC 27603-1423
919.828.0531 fax 919.834.3589
License Number: F–0115

BRUNSWICK REGIONAL WATER AND SEWER AUTHORITY
BRUNSWICK COUNTY NORTH CAROLINA
NEW GROUND WATER SUPPLY AND REVERSE OSMOSIS WATER TREATMENT PLANT
CALCITE TREATMENT FACILITY
FOUNDATION PLAN & GENERAL NOTES

HMC CONSULTANTS
CONSULTING ENGINEERS
NC LICENSE NO. F–0282
6408 WINTHROP DR.
RALEIGH, NORTH CAROLINA
(919) 783–7288
fax (919) 500–7475

DESIGNED BY:	MCH
DRAWN BY:	RGK
CHECKED BY:	MCH
PROJECT NO.	3081–AB
DATE:	JUNE, 2020
SCALE:	3/16" = 1'–0"

SHEET 175 OF 181

S301

17102–S301

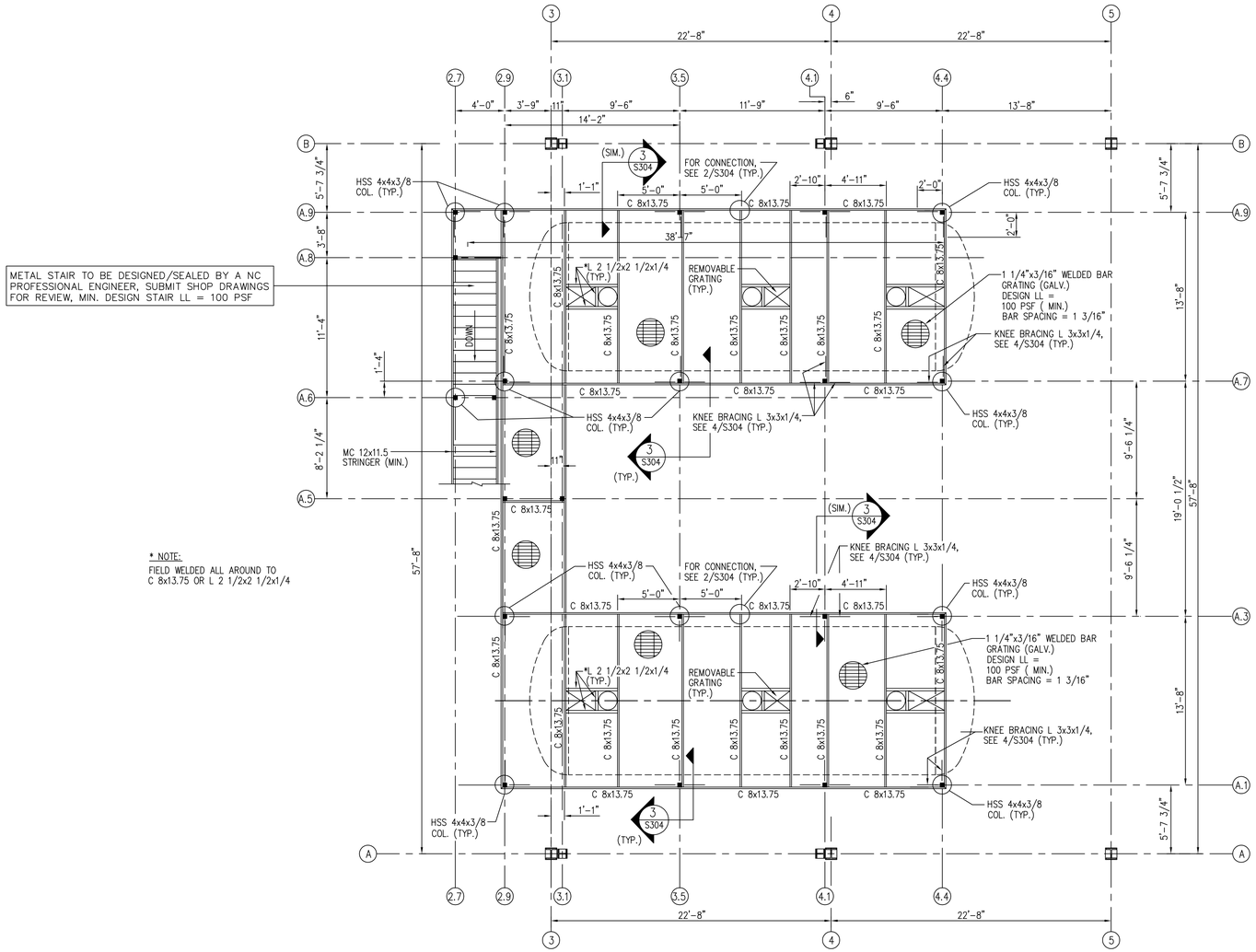

PLATFORM FRAMING PLAN

SCALE: 3/16" = 1'-0"

PLATFORM STRUCTURAL STEEL NOTES:

1. ALL STEELS, INCLUDING CHANNELS, ANGLES AND PLATES SHALL BE ASTM A-36 ,FY = 36 K.S.I. U.O.N.
   ALL MISCELLANEOUS STEEL SHALL BE ASTM A-36, FY = 36 K.S.I. U.O.N.
   ALL TUBE MEMBERS SHALL BE ASTM A-500 GRADE B, FY = 46 K.S.I.
   ALL STRUCTURAL PIPE MEMBERS SHALL BE ASTM A-53, GRADE B, FY = 35 K.S.I. MIN.
2. ALL WELDING SHALL BE PERFORMED BY CERTIFIED WELDERS IN ACCORDANCE WITH A.W.S. SPECIFICATIONS, LATEST EDITION. ALL WELDING ELECTRODES SHALL CONFORM TO A.W.S. A.1, GRADE E-70. BAR ELECTRODES AND GRANULAR FLUX SHALL CONFORM TO A.W.S. A.17, F-70, A.W.S. FLUX CLASSIFICATIONS.
3. THE CONTRACTOR SHALL VERIFY ALL FIELD CONDITIONS & SHALL BRING CONDITIOONS NOT COVERED BY THE PLANS TO THE IMMEDIATE ATTENTION OF THE STRUCTURAL ENGINEER.
4. ALL STEEL MEMBERS, INCLUDING STAIRS, GRATING AND HANDRAILS SHALL BE HOT-DIP GAVANIZED. USE ZINC-RICH PAINT TO REPAIR DAMAGED GALVANIZED STEEL SURFACE AS REQUIRED.

REVISIONS

THE WOOTENCOMPANY
ENGINEERING | PLANNING | ARCHITECTURE
120 North Boylan Avenue Raleigh NC 27603-1423
919.828.0531 fax 919.834.3589
License Number: F-0115

BRUNSWICK REGIONAL WATER AND SEWER AUTHORITY
BRUNSWICK COUNTY NORTH CAROLINA
NEW GROUND WATER SUPPLY AND
REVERSE OSMOSIS WATER TREATMENT PLANT
CALCITE TREATMENT FACILITY
PLATFORM FRAMING PLAN AND NOTES

HMC CONSULTANTS
CONSULTING ENGINEERS
NC LICENSE NO. F-0282
6408 WINTHROP DR.
RALEIGH, NORTH CAROLINA
(919) 783-7288
fax (919) 500-7475

DESIGNED BY:	MCH
DRAWN BY:	RGK
CHECKED BY:	MCH
PROJECT NO.	3081-AB
DATE:	JUNE, 2020
SCALE:	3/16" = 1'-0"

SHEET 176 OF 181

S302

17102-S302

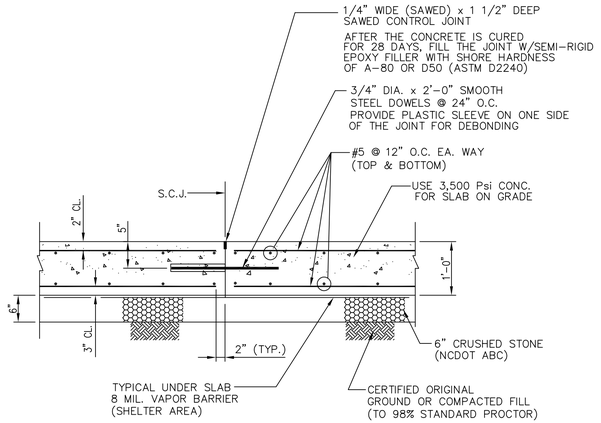

1 S301 — TYPICAL 12" SLAB DETAIL

SCALE: N.T.S.

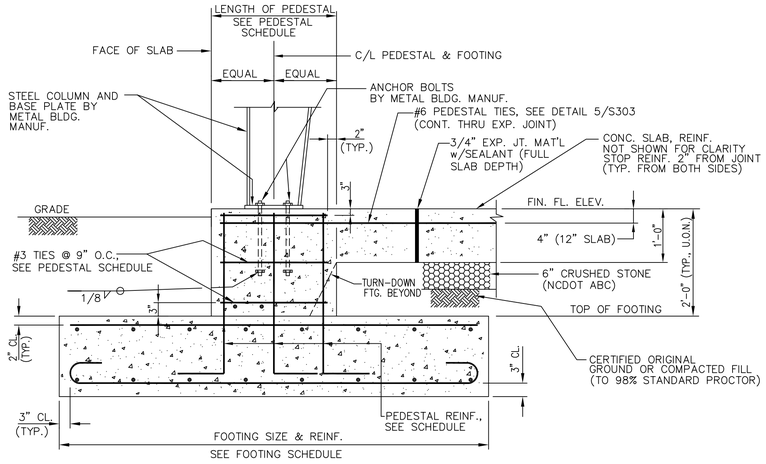

NOTE: CONTINUE TURN-DOWN FTG. REINF. THRU PEDESTAL

2 S301 — SECTION

SCALE: N.T.S.

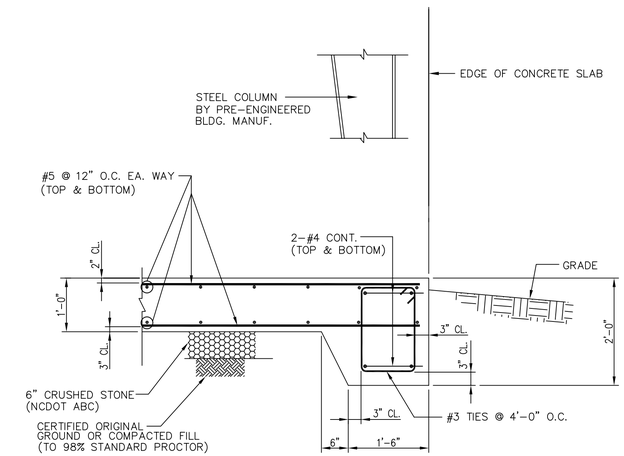

NOTE: CONTINUE GRADE BEAM REINFORCING THRU COLUMN PEDESTAL

3 S301 — SECTION

SCALE: N.T.S.

4 S301 — SECTION AT CRANE SUPPORT COLUMN

SCALE: 3/4" = 1'-0"

SECTION A-A

SCALE: 1 1/2" = 1'-0"

TYPICAL CONFIGURATION

CORNER CONFIGURATION

5 S301 — PEDESTAL TIE DETAIL

NOT TO SCALE

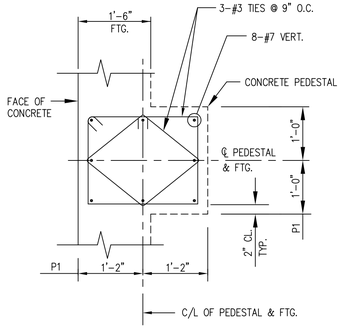

6 S301 — PEDESTAL DETAIL (P1)

NOT TO SCALE

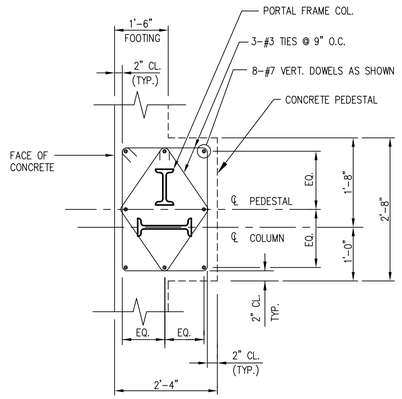

7 S303 — PEDESTAL DETAIL (P3)

NOT TO SCALE

REVISIONS

THE WOOTEN COMPANY
ENGINEERING | PLANNING | ARCHITECTURE
120 North Boylan Avenue Raleigh, NC 27603-1423
919.828.0531 fax 919.834.3589
License Number: F-0115

BRUNSWICK REGIONAL WATER AND SEWER AUTHORITY
BRUNSWICK COUNTY — NORTH CAROLINA
NEW GROUNDWATER SUPPLY AND REVERSE OSMOSIS WATER TREATMENT PLANT
CALCITE TREATMENT FACILITY
SECTIONS AND DETAILS

HMC CONSULTANTS
CONSULTING ENGINEERS
NC LICENSE NO. F-0282
8408 WINTHROP DR.
RALEIGH, NORTH CAROLINA
(919) 783-7288
fax (919) 500-7475

DESIGNED BY:	MCH
DRAWN BY:	RGK
CHECKED BY:	MCH
PROJECT NO.	3081-AB
DATE:	JUNE, 2020
SCALE:	3/4" = 1'-0"

SHEET 177 OF 181

S303

17102-S303

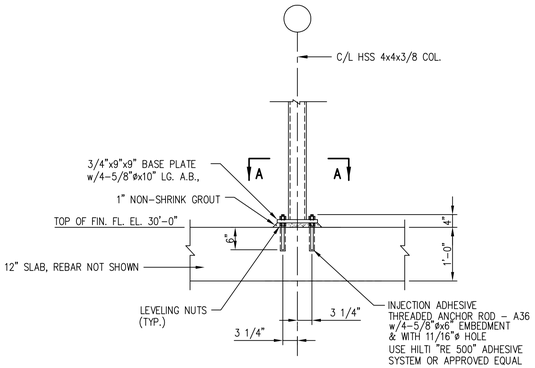

1 S301 — SECTION

SCALE: 3/4" = 1'-0"

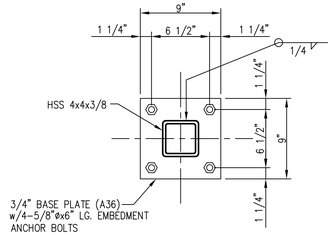

SECTION A-A

SCALE: 1 1/2" = 1'-0"

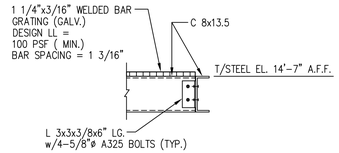

2 S302 — TYPICAL C 8x13.5 TO C 8x13.5 CONNECTION

SCALE: 3/4" = 1'-0"

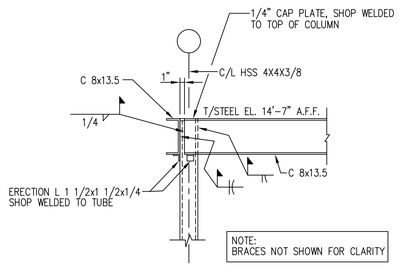

3 S302 — TYPICAL C 8x13.5 TO TUBE COLUMN CONNECTION

SCALE: 3/4" = 1'-0"

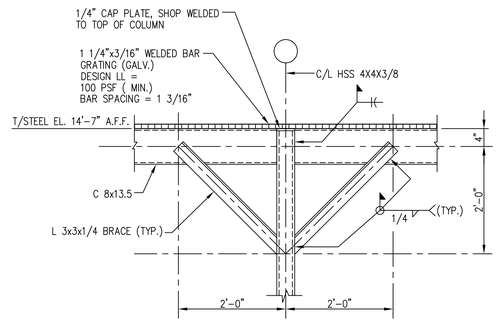

4 S302 — TYPICAL KNEE BRACING CONNECTION DETAIL

SCALE: 3/4" = 1'-0"

REVISIONS

THE WOOTEN COMPANY
ENGINEERING | PLANNING | ARCHITECTURE
120 North Boylan Avenue Raleigh NC 27603-1423
919.828.0531 fax 919.834.3589
License Number: F-0115

BRUNSWICK REGIONAL WATER AND SEWER AUTHORITY
BRUNSWICK COUNTY NORTH CAROLINA
NEW GROUND WATER SUPPLY AND
REVERSE OSMOSIS WATER TREATMENT PLANT
CALCITE TREATMENT FACILITY
SECTIONS AND DETAILS

HMC CONSULTANTS
CONSULTING ENGINEERS
NC LICENSE NO. F-0282
6408 WINTHROP DR
RALEIGH, NORTH CAROLINA
(919) 783-7288
fax (919) 500-7475

DESIGNED BY:	MCH
DRAWN BY:	RGK
CHECKED BY:	MCH
PROJECT NO.	3081-AB
DATE:	JUNE, 2020
SCALE:	3/4" = 1'-0"

SHEET 178 OF 181

S304

17102-S304

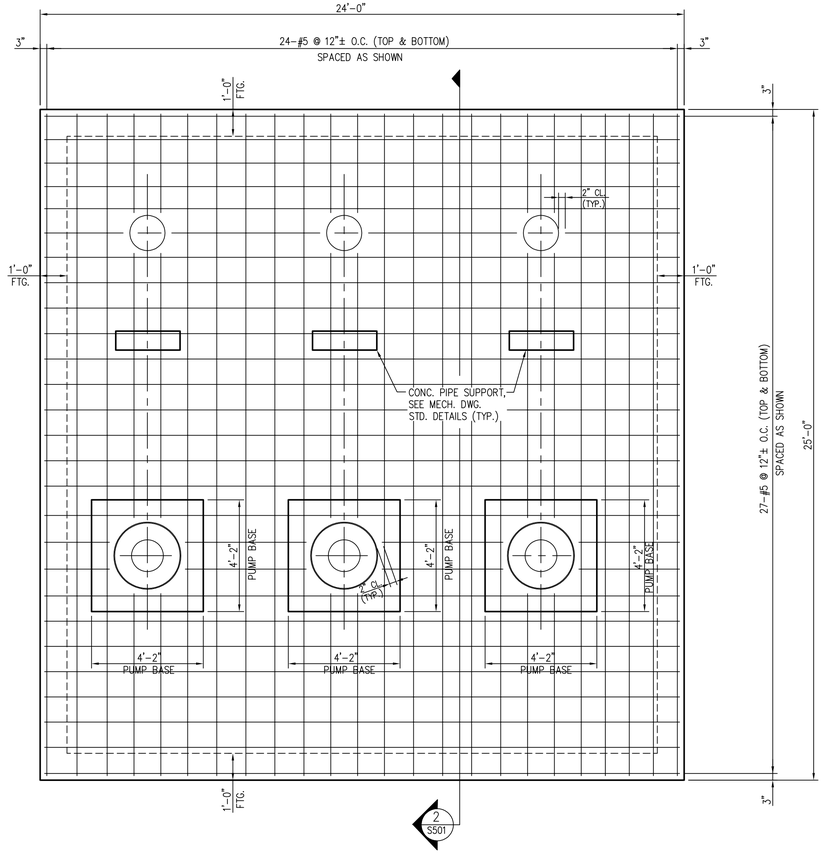

1 / S501 FOUNDATION PLAN

SCALE: 3/8" = 1'-0"

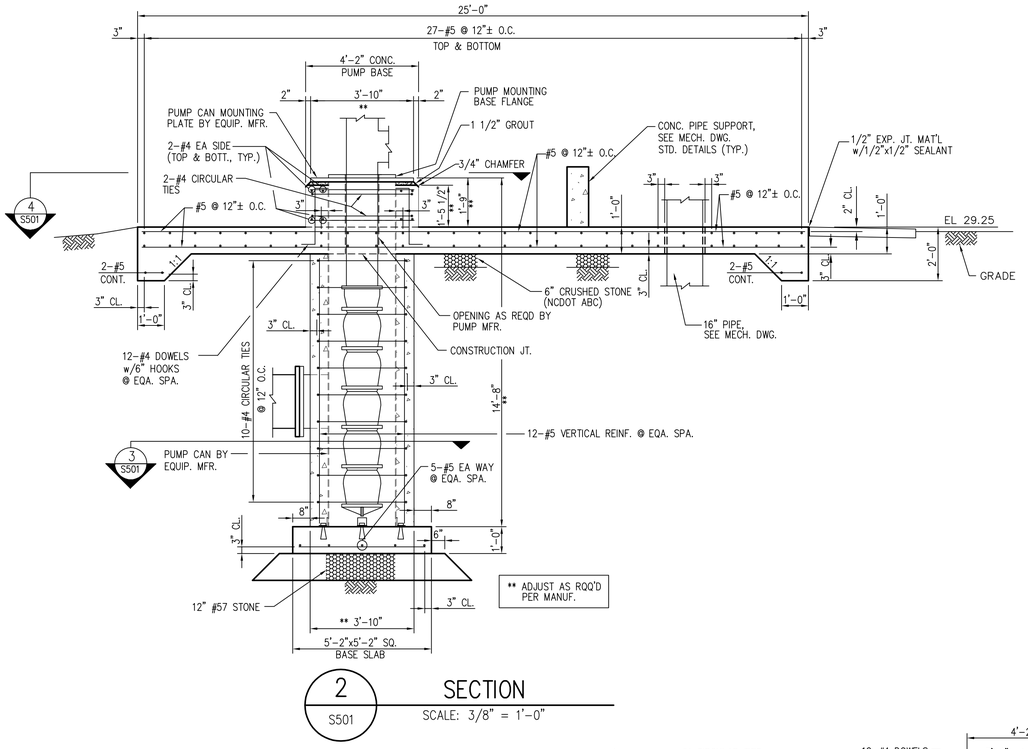

2 / S501 SECTION

SCALE: 3/8" = 1'-0"

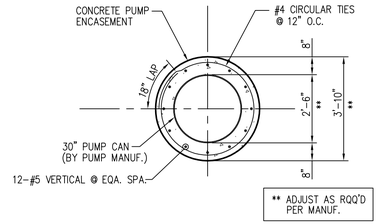

3 / S501 SECTION

SCALE: 3/8" = 1'-0"

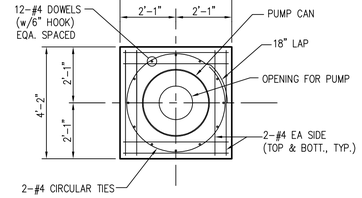

4 / S501 PLAN OF CONCRETE PUMP BASE

SCALE: 3/8" = 1'-0"

NOTE:

1) FOR GENERAL NOTES, PLEASE REFER TO SHEET S201 GENERAL NOTES.

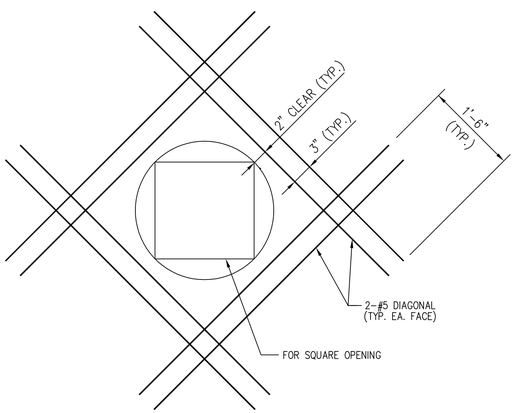

5 / S501 DETAIL OF ADDITIONAL REINFORCING AT OPENING

N.T.S.

(FOR OPENEING LESS THAN REINF. SPACING)

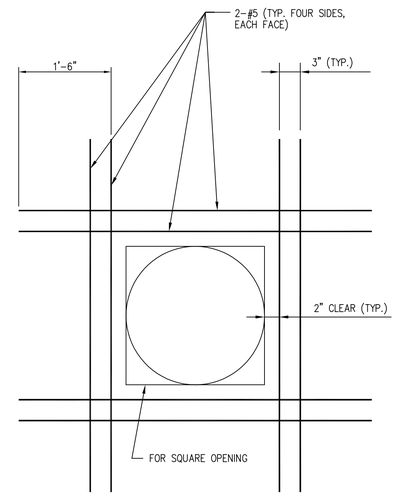

6 / S501 DETAIL OF ADDITIONAL REINFORCING AT OPENING

N.T.S.

(FOR OPENING GREATER THAN REINF. SPACING)

REVISIONS

THE WOOTENCOMPANY
ENGINEERING | PLANNING | ARCHITECTURE
120 North Boylan Avenue Raleigh NC 27603-1423
919.828.0531 fax 919.834.3589
License Number: F-0115

BRUNSWICK REGIONAL WATER AND SEWER AUTHORITY
BRUNSWICK COUNTY NORTH CAROLINA
NEW GROUND WATER SUPPLY AND REVERSE OSMOSIS WATER TREATMENT PLANT
HIGH SERVICE PUMP STATION
FOUNDATION PLAN, SECTIONS AND DETAILS

HMC CONSULTANTS
CONSULTING ENGINEERS
NC LICENSE NO. F-0282
6408 WINTHROP DR.
RALEIGH, NORTH CAROLINA
(919) 783-7288
fax (919) 500-7475

DESIGNED BY:	MCH
DRAWN BY:	RGK
CHECKED BY:	MCH
PROJECT NO.	3081-AB
DATE:	JUNE, 2020
SCALE:	3/8" = 1'-0"

SHEET 179 OF 181

S501

17102-S501

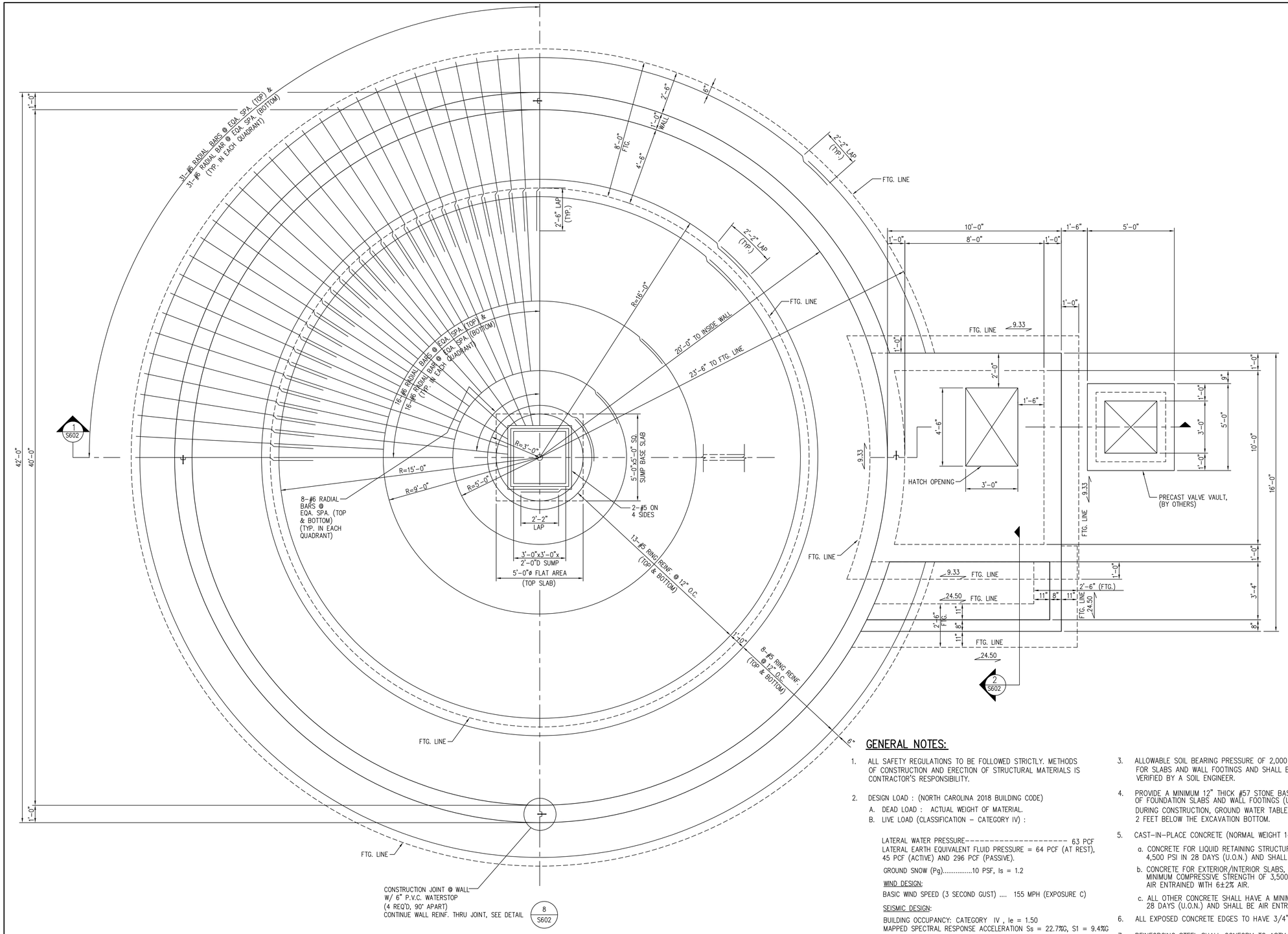

FOUNDATION PLAN
NEW BACKWASH STORAGE TANK

SCALE: 3/8" = 1'-0"

GENERAL NOTES:

1. ALL SAFETY REGULATIONS TO BE FOLLOWED STRICTLY. METHODS OF CONSTRUCTION AND ERECTION OF STRUCTURAL MATERIALS IS CONTRACTOR'S RESPONSIBILITY.

2. DESIGN LOAD : (NORTH CAROLINA 2018 BUILDING CODE)
   A. DEAD LOAD : ACTUAL WEIGHT OF MATERIAL.
   B. LIVE LOAD (CLASSIFICATION – CATEGORY IV) :

   LATERAL WATER PRESSURE---------- 63 PCF
   LATERAL EARTH EQUIVALENT FLUID PRESSURE = 64 PCF (AT REST), 45 PCF (ACTIVE) AND 296 PCF (PASSIVE).

   GROUND SNOW (Pg).....10 PSF, Is = 1.2

   WIND DESIGN:

   BASIC WIND SPEED (3 SECOND GUST) .... 155 MPH (EXPOSURE C)

   SEISMIC DESIGN:

   BUILDING OCCUPANCY: CATEGORY IV , Ie = 1.50
   MAPPED SPECTRAL RESPONSE ACCELERATION Ss = 22.7%G, S1 = 9.4%G
   SPECTRAL RESPONSE ACCELERATION SMS = 36.3%G, SM1 = 22.6%G
   SDS = 24.2%G, SD1 = 15.07%G
   SITE CLASSIFICATION "D"
   SEISMIC DESIGN CATEGORY "D"

   ANALYSIS PROCEDURE – EQUIVALENT LATERAL FORCE METHOD.

3. ALLOWABLE SOIL BEARING PRESSURE OF 2,000 PSF WAS USED IN DESIGN FOR SLABS AND WALL FOOTINGS AND SHALL BE FIELD INSPECTED AND VERIFIED BY A SOIL ENGINEER.

4. PROVIDE A MINIMUM 12" THICK #57 STONE BASE AS WORKING PLATFORM AT BOTTOM OF FOUNDATION SLABS AND WALL FOOTINGS (U.O.N.).
   DURING CONSTRUCTION, GROUND WATER TABLE SHOULD BE MAINTAINED AT LEAST 2 FEET BELOW THE EXCAVATION BOTTOM.

5. CAST-IN-PLACE CONCRETE (NORMAL WEIGHT 145 PSF, U.O.N.).
   a. CONCRETE FOR LIQUID RETAINING STRUCTURES SHALL HAVE A MINIMUM COMPRESSIVE STRENGTH OF 4,500 PSI IN 28 DAYS (U.O.N.) AND SHALL BE AIR ENTRAINED WITH 4 1/2±1 1/2% AIR.
   b. CONCRETE FOR EXTERIOR/INTERIOR SLABS, WALLS, COLUMNS AND BEAMS SHALL HAVE A MINIMUM COMPRESSIVE STRENGTH OF 3,500 PSI IN 28 DAYS (U.O.N.), EXTERIOR CONCRETE SHALL BE AIR ENTRAINED WITH 6±2% AIR.
   c. ALL OTHER CONCRETE SHALL HAVE A MINIMUM COMPRESSIVE STRENGTH OF 3,000 PSI IN 28 DAYS (U.O.N.) AND SHALL BE AIR ENTRAINED WITH 5±1 1/2% AIR.

6. ALL EXPOSED CONCRETE EDGES TO HAVE 3/4" CHAMFERS.

7. REINFORCING STEEL SHALL CONFORM TO ASTM A615, GRADE 60.

8. WELDED WIRE FABRIC SHALL CONFORM TO ASTM A1064.

9. DETAILING, FABRICATION AND PLACING OF REINFORCING STEEL SHALL BE IN ACCORDANCE WITH ACI 318, LATEST EDITION AND THE "MANUAL OF STANDARD PRACTICE FOR DETAILING REINFORCED CONCRETE STRUCTURES" (ACI 315), LATEST EDITION.

10. ALL REINFORCING STEEL LAPS SHALL BE A MINIMUM OF 40 BAR DIAMETERS (18" MINIMUM), UNLESS OTHERWISE NOTED.

11. SUBMIT SHOP DRAWINGS FOR CONCRETE MIX DESIGN AND REINFORCING STEEL TO THE ENGINEER FOR APPROVAL BEFORE FABRICATION.

REVISIONS

THE WOOTEN COMPANY
ENGINEERING | PLANNING | ARCHITECTURE
120 North Boylan Avenue Raleigh NC 27603-1423
919.828.0531 fax 919.834.3589
License Number: F-0115

BRUNSWICK REGIONAL WATER AND SEWER AUTHORITY
BRUNSWICK COUNTY NORTH CAROLINA
NEW GROUND WATER SUPPLY AND REVERSE OSMOSIS WATER TREATMENT PLANT

NEW BACKWASH STORAGE TANK
FOUNDATION PLAN AND GENERAL NOTES

HMC CONSULTANTS
CONSULTING ENGINEERS
NC LICENSE NO. F-0282
6408 WINTHROP DR.
RALEIGH, NORTH CAROLINA
(919) 783-7288
fax (919) 500-7475

DESIGNED BY:	MCH
DRAWN BY:	RGK
CHECKED BY:	MCH
PROJECT NO.	3081-AB
DATE:	JUNE, 2020
SCALE:	3/8" = 1'-0"

SHEET 180 OF 181

S601

17102-S601

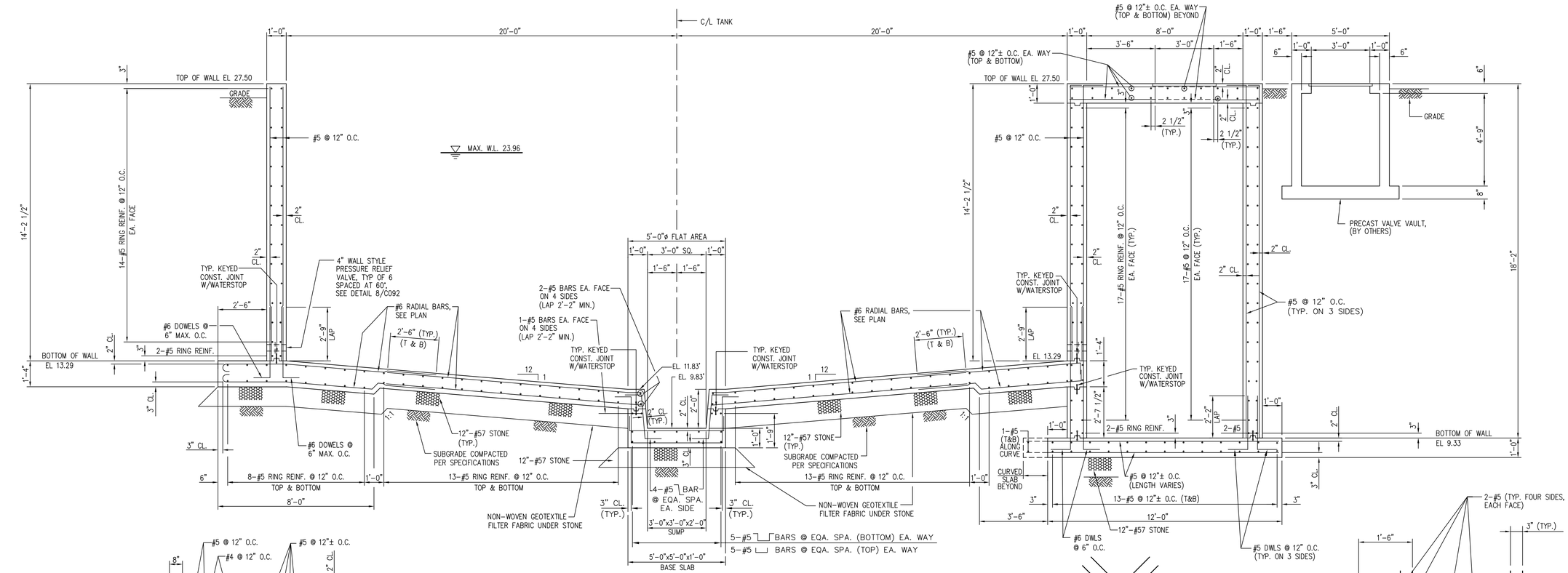

1 / S601 SECTION
SCALE: 3/8" = 1'-0"

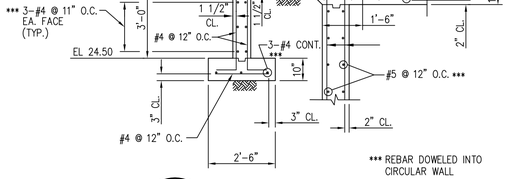

2 / S601 SECTION
SCALE: 3/8" = 1'-0"

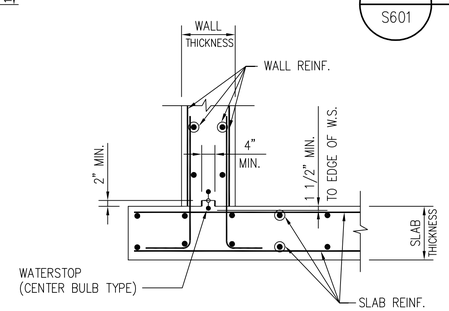

4 / S602 TYP. WALL TO SLAB CONSTRUCTION JOINT
N.T.S.

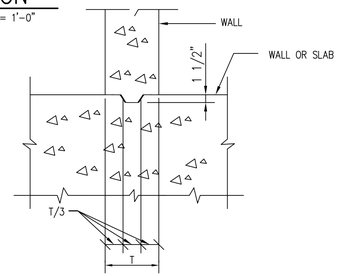

5 / S602 TYPICAL KEYED CONSTRUCTION JOINT
N.T.S.

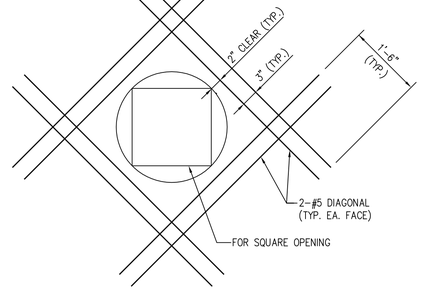

6 / S602 DETAIL OF ADDITIONAL REINFORCING AT OPENING
N.T.S.
(FOR OPENEING LESS THAN REINF. SPACING)

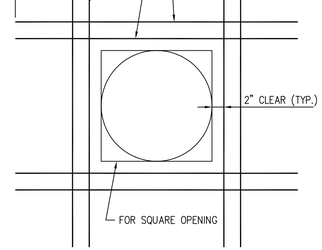

7 / S602 DETAIL OF ADDITIONAL REINFORCING AT OPENING
N.T.S.
(FOR OPENING GREATER THAN REINF. SPACING)

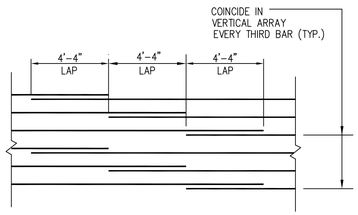

3 / S602 DETAIL OF STAGGERING OF WALL RING BAR SPLICES
N.T.S.

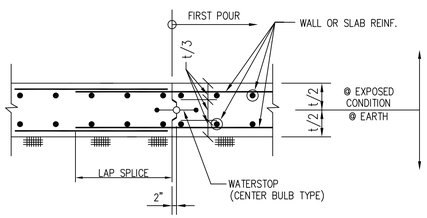

8 / S602 TYPICAL CONSTRUCTION JOINT AT SLAB OR WALL

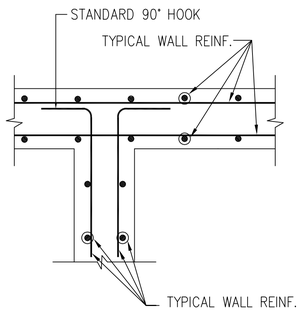

9 / S602 TYPICAL CONCRETE WALL INTERSECTION REINFORCING DETAIL
N.T.S.

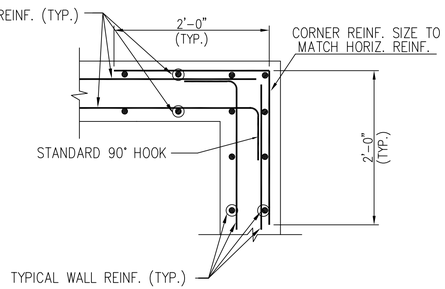

10 / S602 TYP. CONCRETE WALL CORNER REINFORCING DETAIL (U.O.N.)
N.T.S.

REVISIONS

THE WOOTENCOMPANY
ENGINEERING | PLANNING | ARCHITECTURE
120 North Boylan Avenue Raleigh NC 27603-1423
919.828.0531 fax 919.834.3589
License Number: F-0115

BRUNSWICK REGIONAL WATER AND SEWER AUTHORITY
BRUNSWICK COUNTY NORTH CAROLINA
NEW GROUND WATER SUPPLY AND REVERSE OSMOSIS WATER TREATMENT PLANT
NEW BACKWASH STORAGE TANK
SECTIONS & TYPICAL DETAILS

HMC CONSULTANTS
CONSULTING ENGINEERS
NC LICENSE NO. F-0282
8408 MINTHROP DR.
RALEIGH, NORTH CAROLINA
(919) 783-7288
fax (919) 500-7475

DESIGNED BY:	MCH
DRAWN BY:	RGK
CHECKED BY:	MCH
PROJECT NO.	3081-AB
DATE:	JUNE, 2020
SCALE:	3/8" = 1'-0"

SHEET 181 OF 181

S602

17102-S602