ABBREVIATIONS

AFF	ABOVE FINISHED FLOOR
A/S	ABOVE SLAB
ABV	ABOVE
(A)	EXISTING ITEM TO BE ABANDONED IN PLACE
B/G	BELOW GRADE
B/S	BELOW SLAB
BTUH	BRITISH THERMAL UNIT/HOUR
BLW	BELOW
CI	CAST IRON
CW	COLD WATER
CFH	CUBIC FEET/HOUR
CO	CLEAN OUT
DEG	DEGREE
DIA	DIAMETER
DFU	DRAINAGE FIXTURE UNIT
DWG	DRAWING
EWC	ELECTRIC WATER COOLER
F	FAHRENHEIT
FCO	FLOOR CLEAN OUT
FD	FLOOR DRAIN
FFE	FINISHED FLOOR ELEVATION
FT	FOOT/FEET
FR	FROM
GAL	GALLON
GCO	GRADE CLEAN OUT
GPM	GALLONS PER MINUTE
GWH	GAS WATER HEATER
HB	HOSE BIBB
HD	HEAD
HGT	HEIGHT
IN	INCH
IE	INVERT ELEVATION
IMB	ICE MAKER BOX
KW	KILOWATT
L	LAVATORY
MAX	MAXIMUM
MIN	MINIMUM
MS	MOP SINK
MV	MIXING VALVE
NC	NORMALLY CLOSED
NG	NATURAL GAS COMPANY
NO	NORMALLY OPEN
OFCI	OWNER FURNISHED, CONTRACTOR INSTALLED
P	PROPANE
PSI	POUNDS PER SQUARE INCH
PWC	POTABLE WATER COLD
PWH	POTABLE WATER HOT
PWHR	POTABLE WATER HOT RETURN
RCP	RECIRCULATING PUMP
S	SINK
SAN	SANITARY
SH	SHOWER
SIM	SIMILAR
TYP	TYPICAL
U	URINAL
UON	UNLESS OTHERWISE NOTED
V	VENT
VTR	VENT THROUGH ROOF
WC	WATER CLOSET
WCO	WALL CLEAN OUT
WH "X"	WATER HAMMER "SIZE"
WH	WALL HYDRANT

PIPING

- SAN — SANITARY
- SD — STORM DRAIN
- POTABLE WATER COLD (PWC)
- POTABLE WATER HOT (PWH)
- POTABLE WATER HOT RETURN (PWHR)
- V — VENT
- P — PROPANE

PIPING FITTINGS

- ELBOW, 90°
- ELBOW, 90° TURN DOWN
- ELBOW, 90° TURN UP
- TEE
- TEE, OUTLET UP
- TEE, OUTLET DOWN
- TEE, OUTLET UP W/ 90° TURN
- TEE, OUTLET DOWN W/ 90° TURN
- PIPE BREAK
- CAP

PIPING VALVES AND ACCESSORIES

- ISOLATION VALVE
- CIRCUIT SETTER
- HOSE VALVE WITH CAP
- CHECK VALVE
- BALANCING VALVE
- CALIBRATED BALANCING VALVE
- SAFETY OR PRESSURE RELIEF, ANGLE VALVE
- SAFETY OR PRESSURE RELIEF, STRAIGHT THROUGH VALVE
- PRESSURE REDUCING VALVE (PRV)
- REDUCED PRESSURE BACKFLOW PREVENTER
- AUTOMATIC FLOW LIMITING VALVE
- WATER HAMMER ARRESTOR

GENERAL NOTES

1. PROVIDE AND INSTALL ALL PLUMBING SYSTEMS IN ACCORDANCE WITH THE UNIFIED FACILITIES CRITERIA.
2. NO PLUMBING PIPING SHALL BE INSTALLED PRIOR TO APPROVAL OF CONTRACTOR FURNISHED COORDINATION DRAWINGS (INCLUDING, BUT NOT LIMITED TO: FIRE SUPPRESSION, PLUMBING, HVAC, LIGHTING, ETC.). ANY WORK PERFORMED PRIOR TO THE APPROVAL OF ABOVE LISTED DRAWINGS MAY BE REMOVED, RELOCATED, OR ALTERED AT NO ADDITIONAL COST TO THE OWNER.
3. THE DRAWINGS ARE DIAGRAMMATIC AND MAY NOT SHOW COMPLETE OR ACCURATE DETAILS OF THE PLUMBING SYSTEM. MAKE PROPER PIPING CONNECTIONS TO FIXTURES AND EQUIPMENT EVEN THOUGH BRANCH PIPING, ELBOWS, AND CONNECTIONS ARE NOT SHOWN.
4. INSTALLATION OF PLUMBING PIPING SHALL BE COORDINATED WITH OTHER TRADES WORK TO AVOID CONFLICTS.
5. IF ANY EQUIPMENT OR FIXTURES ARE SUBMITTED FOR REVIEW DIFFERING FROM THOSE SPECIFIED ON THE DRAWINGS, IT SHALL BE THE RESPONSIBILITY OF THE CONTRACTOR TO PROVIDE PROPER INSTALLATION AND UTILITY CONNECTIONS AT NO ADDITIONAL COST TO THE OWNER.
7. UNLESS OTHERWISE NOTED, PIPING SHALL BE CONCEALED ABOVE CEILINGS, IN WALLS, PARTITIONS, AND IN PIPE SPACES OR CHASES. IN SPACES WITHOUT SUSPENDED CEILING, INSTALL PIPING EXPOSED MINIMUM 7'-6" TO BOTTOM OF PIPE ABOVE FINISHED FLOOR.
8. INSTALL SHUTOFF VALVES IN ALL DOMESTIC WATER PIPING BRANCHES SERVING ONE OR MORE FIXTURES.
9. INSTALL PIPING SO ALL VALVES, STRAINERS, UNIONS, TRAPS, FLANGES, AND OTHER APPURTENANCES REQUIRING ACCESS ARE ACCESSIBLE.
10. COORDINATE LOCATION OF ACCESS PANELS TO PROVIDE ACCESS TO VALVES AND OTHER APPURTENANCES REQUIRING ACCESS. ACCESS PANELS SHALL BE FURNISHED AND INSTALLED UNDER DIVISION 08.
11. CUTTING OF STRUCTURAL SYSTEM IS NOT PERMITTED. COORDINATE WITH STRUCTURAL TO ENSURE ADEQUATE CLEARANCE IS AVAILABLE FOR INSTALLATION OF FLOOR MOUNTED FIXTURES.
12. INSTALL FLUSHOMETER VALVES FOR ACCESSIBLE WATER CLOSETS WITH HANDLE MOUNTED ON WIDE SIDE OF COMPARTMENT. INSTALL TANKS FOR ACCESSIBLE TANK-TYPE WATER CLOSETS WITH LEVER HANDLE MOUNTED ON WIDE SIDE OF COMPARTMENT.
13. PROVIDE FLOOR CLEANOUTS WITH COVERS DESIGNED FOR SPECIFIC FLOOR FINISH IN WHICH THEY ARE INSTALLED, UNLESS OTHERWISE NOTED.
14. EXTERIOR VENTS SHALL BE INSTALLED A MINIMUM OF 10'-0" FROM MECHANICAL OUTDOOR AIR INTAKE HOODS/VENTS AND OPERABLE WINDOWS AND DOORS.
15. POLISHED CHROMIUM-PLATED PIPE, VALVES, AND FITTINGS SHALL BE PROVIDED IN FINISHED SPACES WHERE EXPOSED TO VIEW.
16. REFER TO ELECTRICAL DRAWINGS FOR PLUMBING EQUIPMENT ELECTRICAL CHARACTERISTICS.
17. PIPE PENETRATIONS THROUGH FIRE OR SMOKE RATED PARTITIONS, WALLS, AND/OR FLOORS SHALL BE MADE FIRE AND SMOKE TIGHT. MAINTAIN FIRE RATING OF FLOOR AND WALL ASSEMBLIES IN ACCORDANCE WITH UL SYSTEMS. INSTALL PIPE PENETRATION ASSEMBLIES IN ACCORDANCE WITH UL LISTED MANUFACTURER'S RECOMMENDATIONS. APPROVED MANUFACTURERS ARE: HILTI, MINNESOTA MINING & MFG. CO., THERMAL CERAMICS, AND PACOR, INC.
18. FIELD VERIFY CONDITIONS PRIOR TO CONSTRUCTION AND NOTIFY THE ARCHITECT/ENGINEER OF DISCREPANCIES WITH THE CONSTRUCTION DOCUMENTS AND/OR POTENTIAL PROBLEMS OBSERVED BEFORE COMMENCING WORK IN THE AFFECTED AREA.

SYM	DESCRIPTION	DATE	APPR

NAVFAC

MARK D. DIMOF — MECHANICAL — SEAL 041351 — ENGINEER — NORTH CAROLINA — 06/25/20 — SEAL

HDR
440 S. CHURCH STREET, SUITE 1000
CHARLOTTE, NC 28202
TEL (704)338-6700
A/E INFO

APPROVED
FOR COMMANDER NAVFAC 7/10/2020
ACTIVITY
Approved by Emily Sylvester, Director of Installation Development Division
SATISFACTORY TO DATE 06/19/2020

DES	MDD	DRW	BNR	CHK	CSW

PM/DM SGL/RMS
BRANCH MANAGER ALG
CHIEF ENGARCH EJA
FIRE PROTECTION

DEPARTMENT OF THE NAVY
NAVAL FACILITIES ENGINEERING COMMAND ~ MID-ATLANTIC
CAMP LEJEUNE ~ JACKSONVILLE, NC
ALG
MARSOC
JACKSONVILLE, NORTH CAROLINA
P1395 MARINE RAIDER HEADQUARTERS
LEGEND, ABBREVIATIONS AND NOTES

SCALE: AS NOTED
EPROJECT NO.: 1603164
CONSTR. CONTR. NO.
NAVFAC DRAWING NO. 12794361
SHEET 142 OF 228
P-001
DRAWFORM REVISION: 17 APRIL 2018

C:\vf\2016\1013681\3-MCENTRAL_P-1395 MARINE HQ_mark.dimoff.rvt
6/25/2020 3:45:58 PM

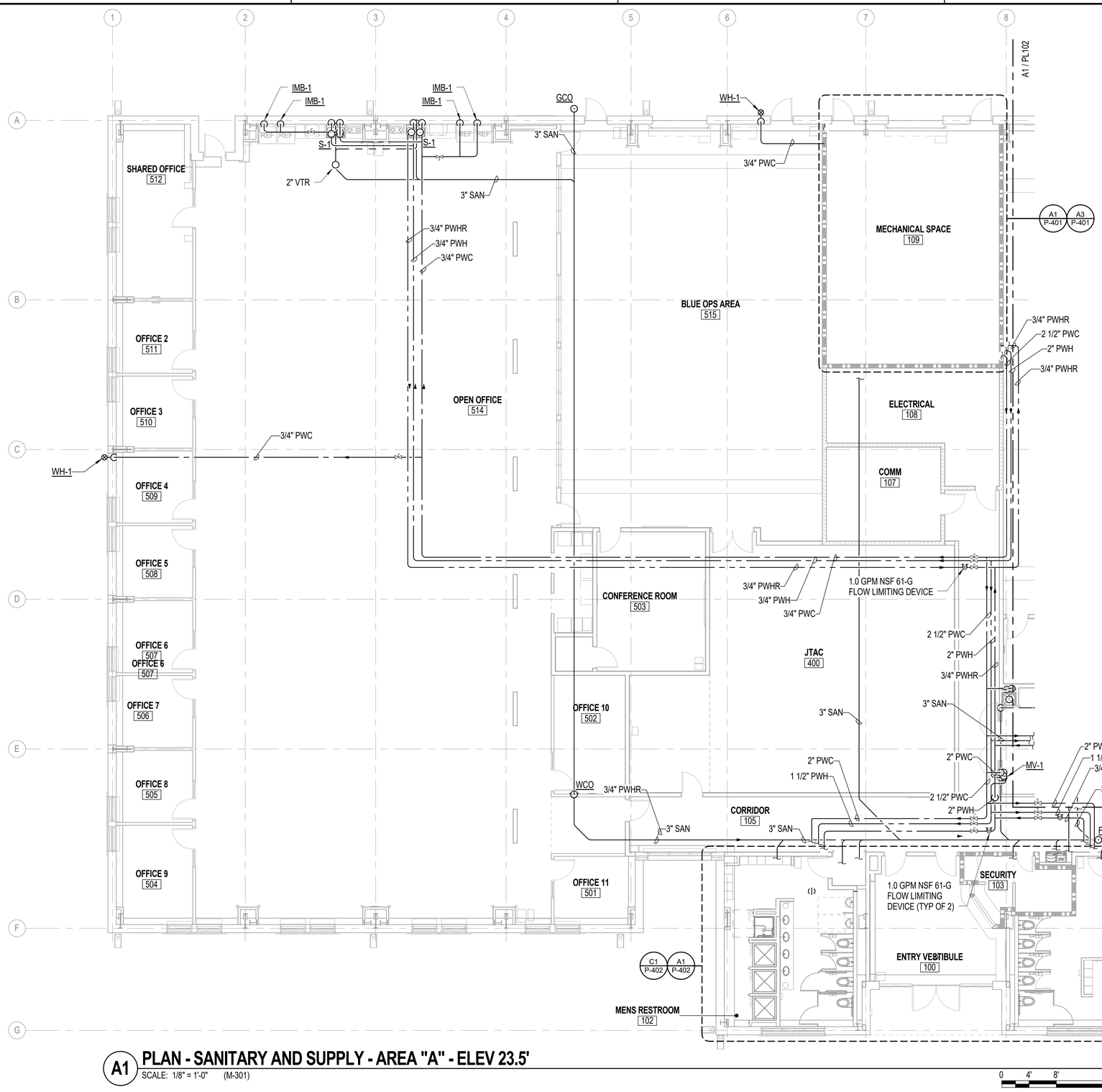

A1 PLAN - SANITARY AND SUPPLY - AREA "A" - ELEV 23.5'

SCALE: 1/8" = 1'-0" (M-301)

0 4' 8' 16'

GENERAL NOTES

1. ALL PIPING AND EQUIPMENT SHOWN ON THIS DRAWING IS DIAGRAMMATIC. LOCATE ALL PIPING AND EQUIPMENT SO AS TO CLEAR ALL OBSTACLES.
2. ALL WORK TO BE PREFORMED IN ACCORDANCE WITH APPLICABLE FEDERAL, STATE, AND LOCAL CODES.
3. VERIFY ALL DIMENSIONS AND CONDITIONS PRIOR TO THE START OF INSTALLATION OF ALL MECHANICAL AND PLUMBING EQUIPMENT. CONSTRUCTION DISCREPANCIES TO BE BROUGHT TO THE IMMEDIATE ATTENTION OF THE CONTRACTING OFFICER FOR A RESOLUTION.
4. COORDINATE ALL REQUIRED CONDUIT, PIPING AND CHASES FOR GOVERNMENT FURNISHED GOVERNMENT INSTALLED EQUIPMENT WITH THE GOVERNMENT.
5. REFER TO THE ARCHITECTURAL REFLECTED CEILING PLAN DRAWINGS FOR LOCATION OF CEILING COMPONENTS INCLUDING DIFFUSERS, REGISTERS, LIGHTS, SPRINKLERS, FIRE ALARM DEVICES, ETC.

WALL RATING LEGEND

- NON-RATED WALL
- 1 HR RATED PARTITION
- SMOKE PARTITION

KEY PLAN

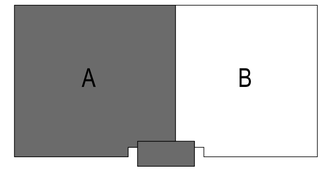

PLAN NORTH

APPR | DATE | SYM | DESCRIPTION

NAVFAC

MARK D. DIMOFF MECHANICAL SEAL 041351 ENGINEER NORTH CAROLINA 06 25 20 SEAL

HDR
440 S. CHURCH STREET, SUITE 1000
CHARLOTTE, NC. 28202
TEL. (704)338-6700
A/E INFO

APPROVED
FOR COMMANDER NAVFAC 7/10/2020
ACTIVITY
Approved by Emily Sylvester, Director of Installation Development Division
SATISFACTORY TO DATE 06/19/2020

DES	MDD	DRW	BNR	CHK	CSW
PM/DM	SGL/RMS				
BRANCH MANAGER	ALG				
CHIEF ENG/ARCH	EJA				
FIRE PROTECTION					

DEPARTMENT OF THE NAVY
NAVAL FACILITIES ENGINEERING COMMAND MID-ATLANTIC
NAVAL FACILITIES ENGINEERING COMMAND ~ MID-ATLANTIC
CAMP LEJEUNE - JACKSONVILLE, NC
ALG
MARSOC
JACKSONVILLE, NORTH CAROLINA
P1395 MARINE RAIDER HEADQUARTERS
SANITARY AND SUPPLY FLOOR PLAN - AREA "A"

SCALE:	AS NOTED
EPROJECT NO.:	1603164
CONSTR. CONTR. NO.	
NAVFAC DRAWING NO.	12794362
SHEET	143 OF 228

PL101

DRAWFORM REVISION: 17 APRIL 2018

C:\hr\f2018\01\36813-M-CENTRAL_P-1395 MARINE HQ_mark.dimoff.rvt
6/25/2020 3:46:34 PM

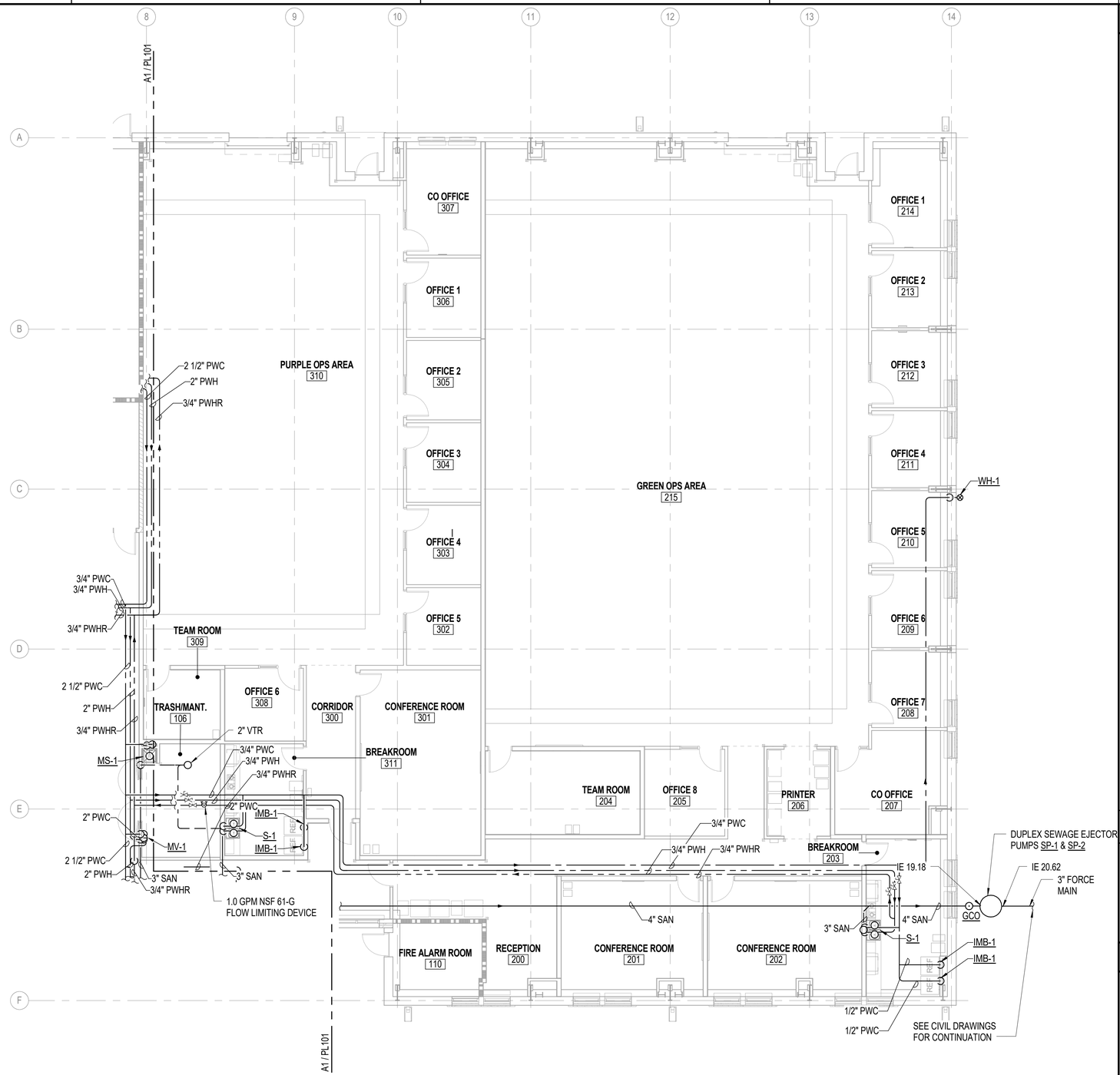

A1 PLAN - SANITARY AND SUPPLY - AREA "B" - ELEV 23.5'

SCALE: 1/8" = 1'-0" (M-301)

0 4' 8' 16'

GENERAL NOTES

1. ALL PIPING AND EQUIPMENT SHOWN ON THIS DRAWING IS DIAGRAMMATIC. LOCATE ALL PIPING AND EQUIPMENT SO AS TO CLEAR ALL OBSTACLES.
2. ALL WORK TO BE PREFORMED IN ACCORDANCE WITH APPLICABLE FEDERAL, STATE, AND LOCAL CODES.
3. VERIFY ALL DIMENSIONS AND CONDITIONS PRIOR TO THE START OF INSTALLATION OF ALL MECHANICAL AND PLUMBING EQUIPMENT. CONSTRUCTION DISCREPANCIES TO BE BROUGHT TO THE IMMEDIATE ATTENTION OF THE CONTRACTING OFFICER FOR A RESOLUTION.
4. COORDINATE ALL REQUIRED CONDUIT, PIPING AND CHASES FOR GOVERNMENT FURNISHED GOVERNMENT INSTALLED EQUIPMENT WITH THE GOVERNMENT.
5. REFER TO THE ARCHITECTURAL REFLECTED CEILING PLAN DRAWINGS FOR LOCATION OF CEILING COMPONENTS INCLUDING DIFFUSERS, REGISTERS, LIGHTS, SPRINKLERS, FIRE ALARM DEVICES, ETC.

WALL RATING LEGEND

- NON-RATED WALL
- 1 HR RATED PARTITION
- SMOKE PARTITION

KEY PLAN

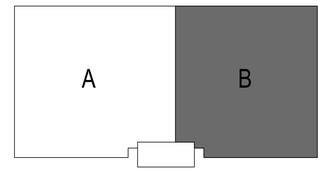

PLAN NORTH

SYM	DESCRIPTION	DATE	APPR

NAVFAC

MARK P. DIMOFF MECHANICAL ENGINEER SEAL 041351 ENGINEER NORTH CAROLINA 06/25/20 SEAL

HDR
440 S. CHURCH STREET, SUITE 1000
CHARLOTTE, NC 28202
TEL (704)338-6700
A/E INFO

APPROVED
FOR COMMANDER NAVFAC 7/1/2020
ACTIVITY
Approved by Emily Sylvester, Director of Installation Development Division
SATISFACTORY TO DATE 06/19/2020

DES	MDD	DRW	BNR	CHK	CSW
PM/DM	SGL/RMS				
BRANCH MANAGER	ALG				
CHIEF ENGARCH	EJA				
FIRE PROTECTION					

DEPARTMENT OF THE NAVY
NAVAL FACILITIES ENGINEERING COMMAND ~ MID-ATLANTIC
CAMP LEJEUNE ~ JACKSONVILLE, NC
ALG MARSOC
JACKSONVILLE, NORTH CAROLINA
P1395 MARINE RAIDER HEADQUARTERS
SANITARY AND SUPPLY FLOOR PLAN - AREA "B"

SCALE: AS NOTED
EPROJECT NO.: 1603164
CONSTR. CONTR. NO.
NAVFAC DRAWING NO. 12794363
SHEET 144 OF 228

PL102

DRAWFORM REVISION: 17 APRIL 2018

C:\vk\20\16\101368\13-MCENTRAL_P-1395 MARINE HQ_mark.dimoff.rvt
6/25/2020 3:59:07 PM

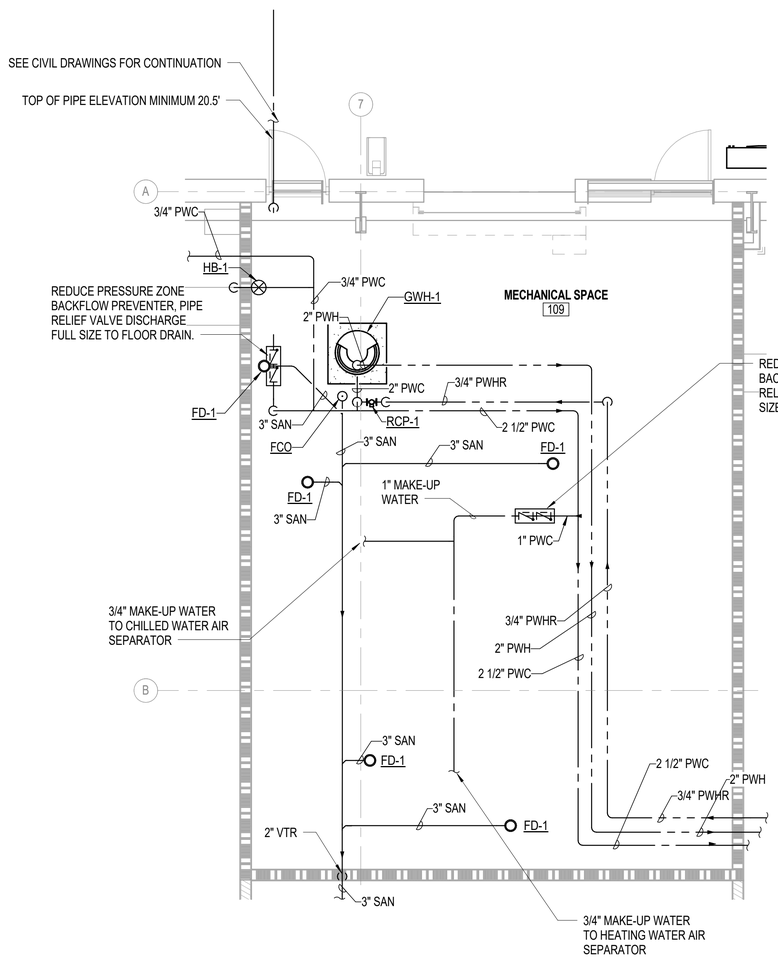

A1 ENLARGED MECHANICAL ROOM - SANITARY AND DOMESTIC WATER - ELEV 23.5'

SCALE: 1/4" = 1'-0" (PL101)

0 1' 2' 4'

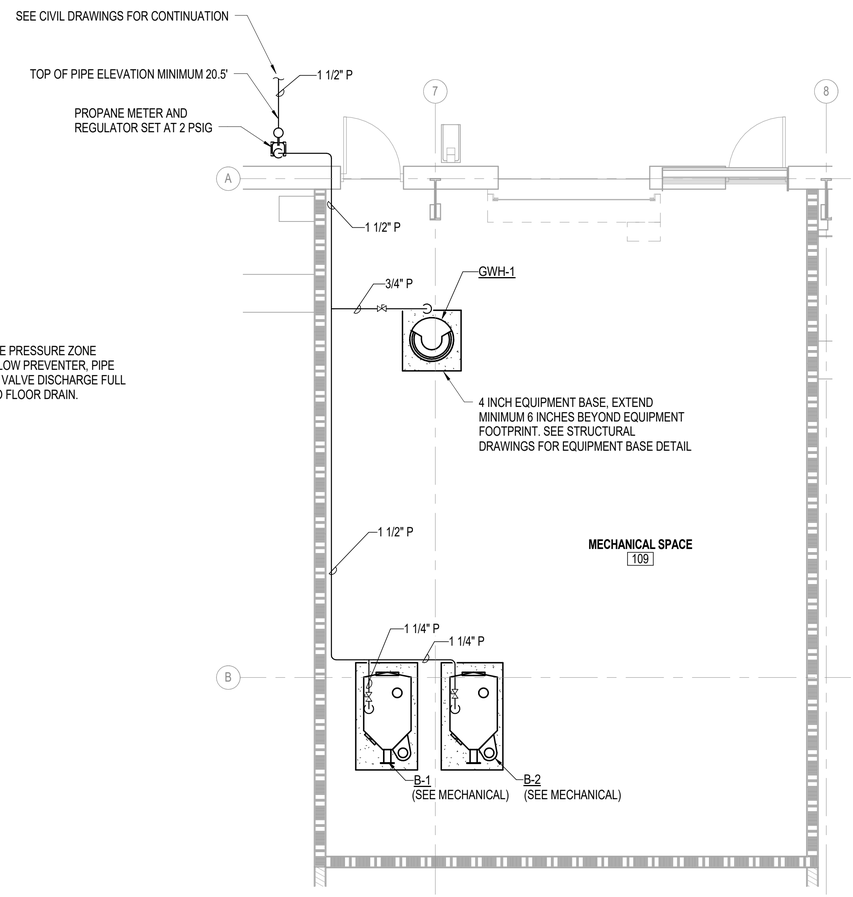

A3 ENLARGED MECHANICAL ROOM - PROPANE - ELEV 23.5'

SCALE: 1/4" = 1'-0" (PL101)

0 1' 2' 4'

GENERAL NOTES

1. ALL PIPING AND EQUIPMENT SHOWN ON THIS DRAWING IS DIAGRAMMATIC. LOCATE ALL PIPING AND EQUIPMENT SO AS TO CLEAR ALL OBSTACLES.
2. ALL WORK TO BE PREFORMED IN ACCORDANCE WITH APPLICABLE FEDERAL, STATE, AND LOCAL CODES.
3. VERIFY ALL DIMENSIONS AND CONDITIONS PRIOR TO THE START OF INSTALLATION OF ALL MECHANICAL AND PLUMBING EQUIPMENT. CONSTRUCTION DISCREPANCIES TO BE BROUGHT TO THE IMMEDIATE ATTENTION OF THE CONTRACTING OFFICER FOR A RESOLUTION.
4. COORDINATE ALL REQUIRED CONDUIT, PIPING AND CHASES FOR GOVERNMENT FURNISHED GOVERNMENT INSTALLED EQUIPMENT WITH THE GOVERNMENT.
5. REFER TO THE ARCHITECTURAL REFLECTED CEILING PLAN DRAWINGS FOR LOCATION OF CEILING COMPONENTS INCLUDING DIFFUSERS, REGISTERS, LIGHTS, SPRINKLERS, FIRE ALARM DEVICES, ETC.

WALL RATING LEGEND

NON-RATED WALL

1 HR RATED PARTITION

SMOKE PARTITION

KEY PLAN

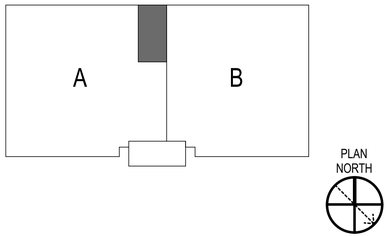

SYM	DESCRIPTION	DATE	APPR

NAVFAC

MARK D. DIMOFF MECHANICAL SEAL 041351 ENGINEER NORTH CAROLINA 06/25/20

SEAL

HDR
440 S. CHURCH STREET, SUITE 1000
CHARLOTTE, NC 28202
TEL (704)338-6700

A/E INFO

APPROVED

FOR COMMANDER NAVFAC 7/10/2020

ACTIVITY

Approved by Emily Sylvester, Director of Installation Development Division

SATISFACTORY TO DATE 06/19/2020

DES MDD DRW BNR CHK CSW

PM/DM SGL/RMS

BRANCH MANAGER ALG

CHIEF ENG/ARCH EJA

FIRE PROTECTION

DEPARTMENT OF THE NAVY
NAVAL FACILITIES ENGINEERING COMMAND
NAVAL FACILITIES ENGINEERING COMMAND ~ MID-ATLANTIC
CAMP LEJEUNE - JACKSONVILLE, NC
ALG
MARSOC
JACKSONVILLE, NORTH CAROLINA
P1395 MARINE RAIDER HEADQUARTERS
ENLARGED PLUMBING PLANS

SCALE: AS NOTED

EPROJECT NO.: 1603164

CONSTR. CONTR. NO.

NAVFAC DRAWING NO. 12794364

SHEET 145 OF 228

P-401

DRAWFORM REVISION: 17 APRIL 2018

C:\rvt\2016\101368\13-M-CENTRAL_P-1395 MARINE HQ_mark.dimoff.rvt
6/25/2020 3:46:02 PM

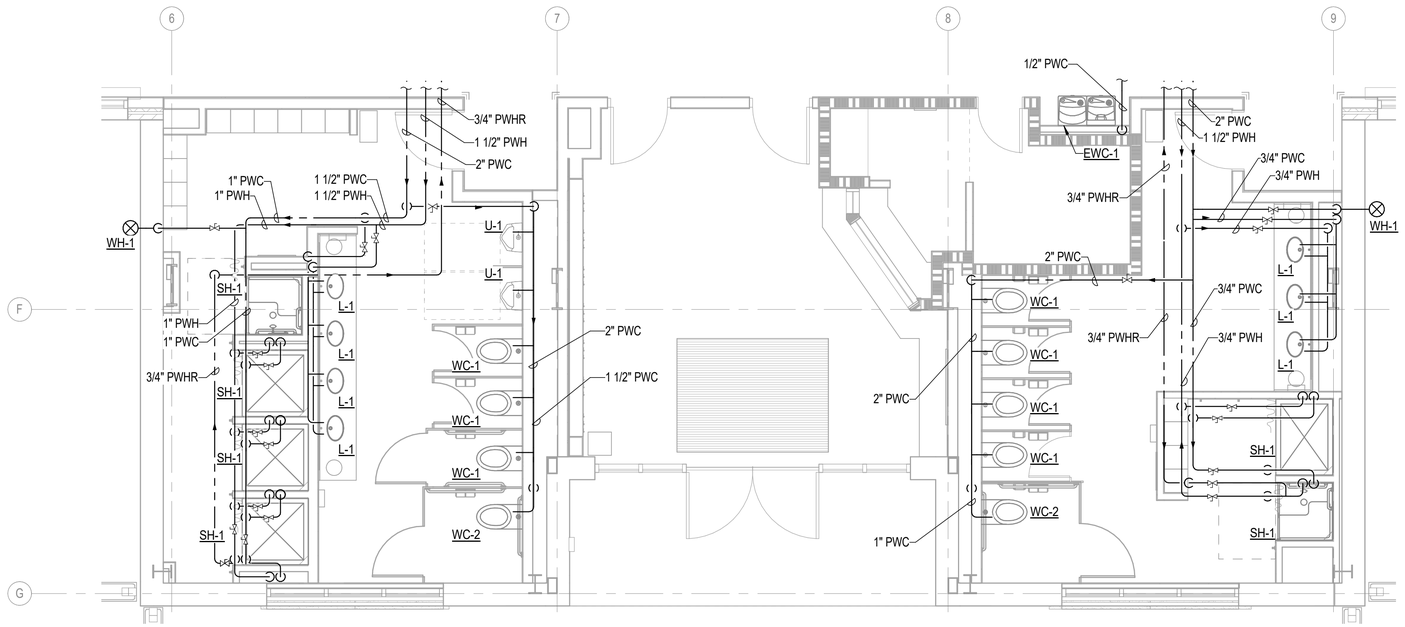

C1 ENLARGED DOMESTIC WATER PLAN - ELEV 23.5'

SCALE: 1/4" = 1'-0" (PL101)

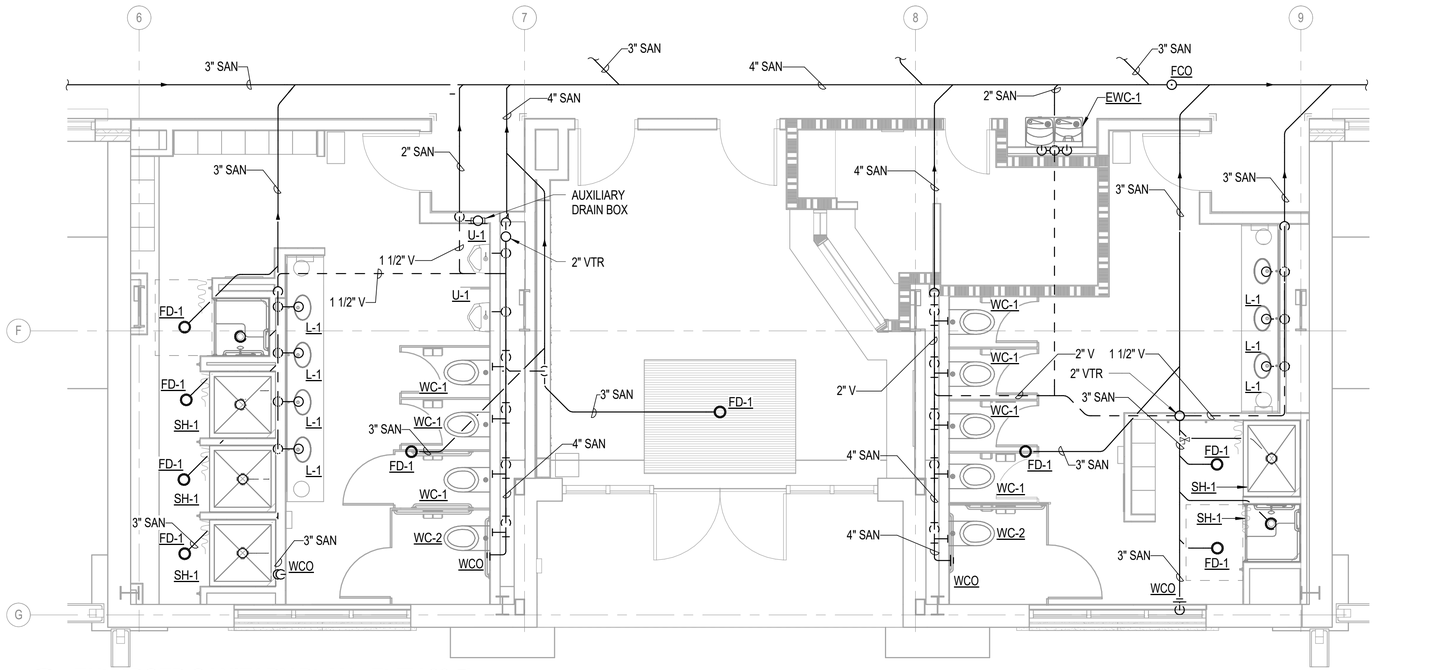

A1 ENLARGED SANITARY PLAN - ELEV 23.5'

SCALE: 1/4" = 1'-0" (PL101)

GENERAL NOTES

1. ALL PIPING AND EQUIPMENT SHOWN ON THIS DRAWING IS DIAGRAMMATIC. LOCATE ALL PIPING AND EQUIPMENT SO AS TO CLEAR ALL OBSTACLES.
2. ALL WORK TO BE PREFORMED IN ACCORDANCE WITH APPLICABLE FEDERAL, STATE, AND LOCAL CODES.
3. VERIFY ALL DIMENSIONS AND CONDITIONS PRIOR TO THE START OF INSTALLATION OF ALL MECHANICAL AND PLUMBING EQUIPMENT. CONSTRUCTION DISCREPANCIES TO BE BROUGHT TO THE IMMEDIATE ATTENTION OF THE CONTRACTING OFFICER FOR A RESOLUTION.
4. COORDINATE ALL REQUIRED CONDUIT, PIPING AND CHASES FOR GOVERNMENT FURNISHED GOVERNMENT INSTALLED EQUIPMENT WITH THE GOVERNMENT.
5. REFER TO THE ARCHITECTURAL REFLECTED CEILING PLAN DRAWINGS FOR LOCATION OF CEILING COMPONENTS INCLUDING DIFFUSERS, REGISTERS, LIGHTS, SPRINKLERS, FIRE ALARM DEVICES, ETC.

KEY PLAN

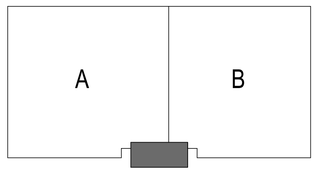

PLAN NORTH

SYM	DESCRIPTION	DATE	APPR

NAVFAC

MARK D. DIMOFF MECHANICAL SEAL 041351 ENGINEER NORTH CAROLINA 06/25/20 SEAL

HDR
440 S. CHURCH STREET, SUITE 1000
CHARLOTTE, NC 28202
TEL (704)338-6700
A/E INFO

APPROVED
FOR COMMANDER NAVFAC 7/10/2020
ACTIVITY
Approved by Emily Sylvester, Director of Installation Development Division
SATISFACTORY TO DATE 06/19/2020
DES MDD DRW BNR CHK CSW
PM/DM SGL/RMS
BRANCH MANAGER ALG
CHIEF ENG/ARCH EJA
FIRE PROTECTION

DEPARTMENT OF THE NAVY
NAVAL FACILITIES ENGINEERING COMMAND
NAVAL FACILITIES ENGINEERING COMMAND ~ MID-ATLANTIC
CAMP LEJEUNE - JACKSONVILLE, NC
ALG
MARSOC
JACKSONVILLE, NORTH CAROLINA
P1395 MARINE RAIDER HEADQUARTERS
ENLARGED PLUMBING PLANS

SCALE: AS NOTED
EPROJECT NO.: 1603164
CONSTR. CONTR. NO.
NAVFAC DRAWING NO. 12794365
SHEET 146 OF 228
P-402
DRAWFORM REVISION: 17 APRIL 2018

C:\vvt\2016\10136813-M-CENTRAL_P-1395 MARINE HQ_mark.dimoff.rvt
6/25/2020 3:46:08 PM

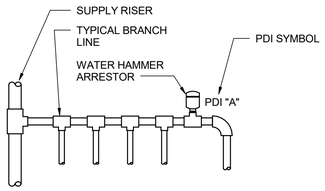

NOTES:
1. PREFERRED INSTALL WATER HAMMER ARRESTORS AT THE END OF BRANCH LINE BETWEEN THE LAST TWO FIXTURES SERVED.
2. ONE WATER HAMMER ARRESTOR PER 20' LINE, AND ANOTHER FOR BRANCHES OVER 20' IN LENGTH.
3. THE SUM OF FIXTURE UNIT RATING OF UNITS OVER 20' IN LENGTH SHALL BE EQUAL TO OR GREATER THAN THE DEMAND OF THE BRANCHES.
4. INSTALL WATER HAMMER ARRESTOR BEHIND ACCESS PANEL. COORDINATE ACCESS PANEL LOCATION WITH ARCHITECTURAL PLANS.

WATER HAMMER ARRESTOR SCHEDULE						
PDI SYMBOL	A	B	C	D	E	F
FIXTURE UNIT RATING	1-11	12-32	33-60	61-113	114-154	155-330

C1 WATER HAMMER ARRESTOR INSTALLATION DETAIL
NTS

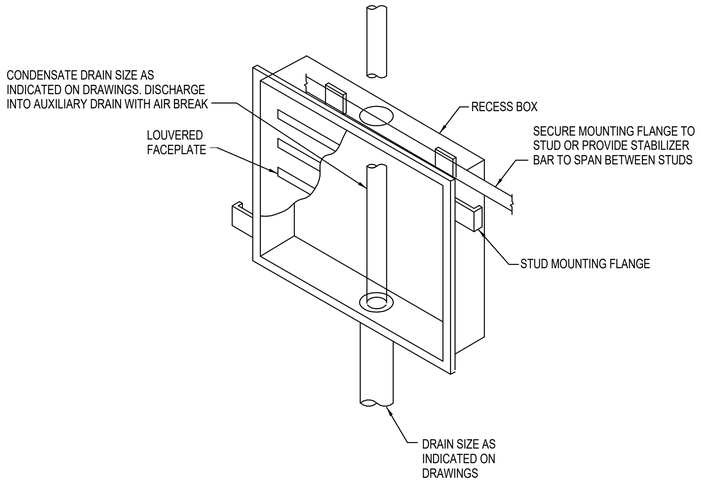

B1 AUXILIARY DRAIN DETAIL
NTS

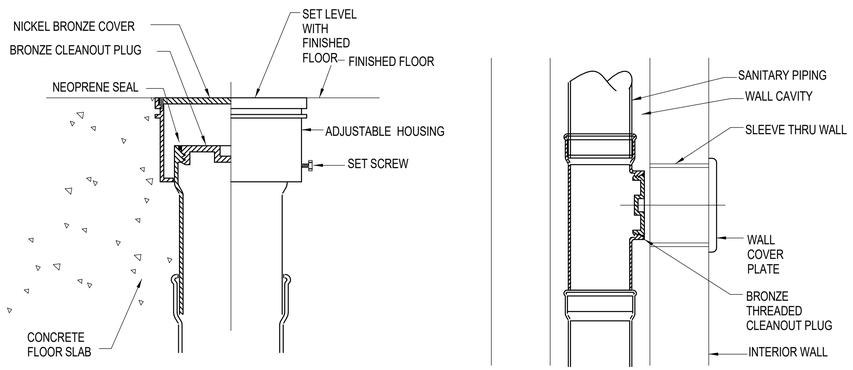

A1 FLOOR AND WALL CLEANOUT DETAIL
NTS

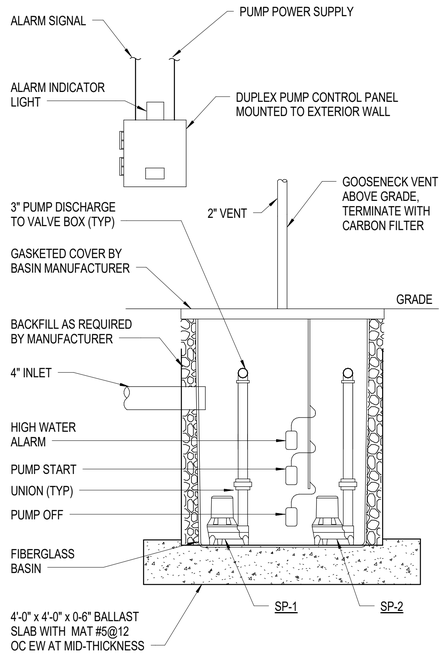

B3 DUPLEX SUMP PUMP DETAIL
NTS

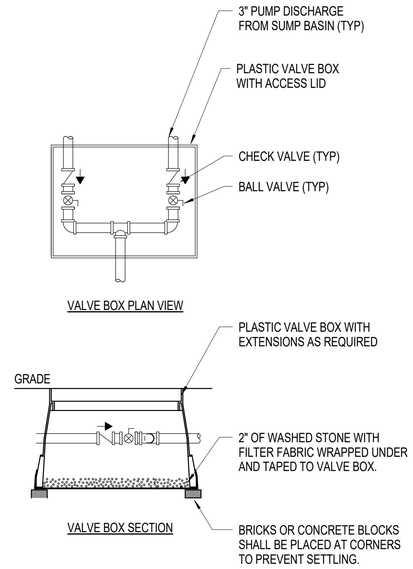

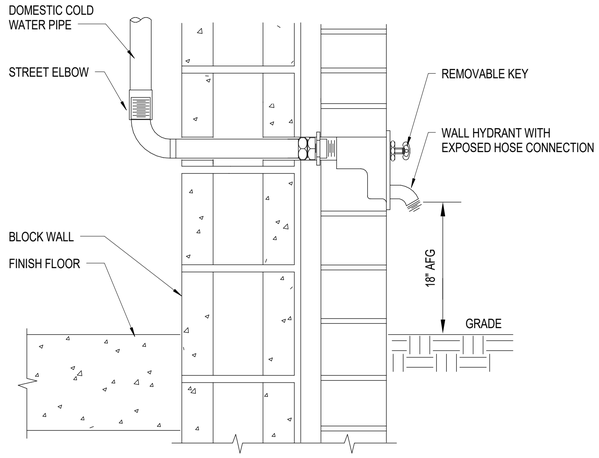

B4 WALL HYDRANT
NTS

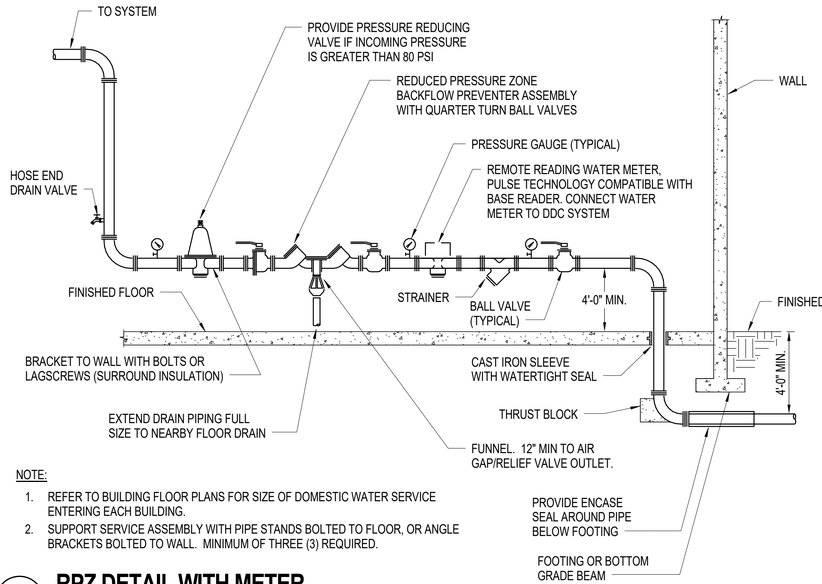

NOTE:
1. REFER TO BUILDING FLOOR PLANS FOR SIZE OF DOMESTIC WATER SERVICE ENTERING EACH BUILDING.
2. SUPPORT SERVICE ASSEMBLY WITH PIPE STANDS BOLTED TO FLOOR, OR ANGLE BRACKETS BOLTED TO WALL. MINIMUM OF THREE (3) REQUIRED.

A3 RPZ DETAIL WITH METER
NTS

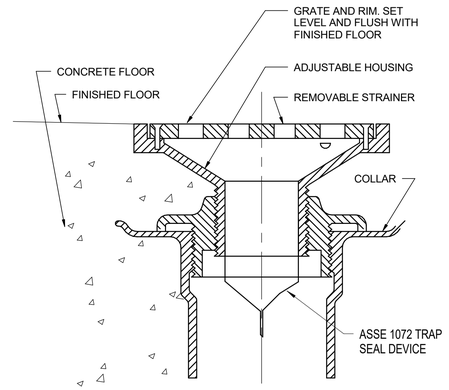

A5 FLOOR DRAIN DETAIL
NTS

APPR	
DATE	
DESCRIPTION	
SYM	

NAVFAC

MARY D. DIMOFF MECHANICAL SEAL 041351 ENGINEER NORTH CAROLINA 06/25/20 SEAL

HDR
440 S. CHURCH STREET, SUITE 1000
CHARLOTTE, NC 28202
TEL (704)338-6700
A/E INFO

APPROVED
FOR COMMANDER NAVFAC 7/10/2020
ACTIVITY
Approved by Emily Sylvester, Director of Installation Development Division
SATISFACTORY TO DATE 06/19/2020
DES MDD | DRW BNR | CHK CSW
PM/DM SGL/RMS
BRANCH MANAGER ALG
CHIEF ENGARCH EJA
FIRE PROTECTION

DEPARTMENT OF THE NAVY
NAVAL FACILITIES ENGINEERING COMMAND ~ MID-ATLANTIC
CAMP LEJEUNE ~ JACKSONVILLE, NC
ALG MARSOC
JACKSONVILLE, NORTH CAROLINA
P1395 MARINE RAIDER HEADQUARTERS
PLUMBING DETAILS

SCALE: AS NOTED
EPROJECT NO.: 1603164
CONSTR. CONTR. NO.
NAVFAC DRAWING NO. 12794366
SHEET 147 OF 228
P-501
DRAWFORM REVISION: 17 APRIL 2018

C:\rvt\2016\1913683\A-CENTRAL_P-1395 MARINE HQ_mark.dimoff.rvt
6/25/2020 3:46:12 PM

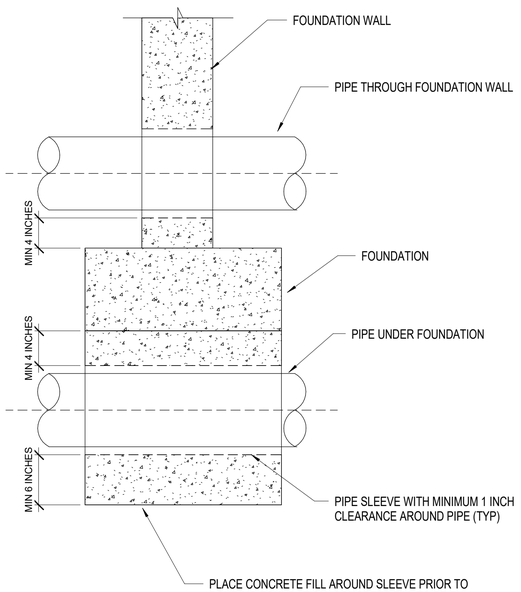

B1 PIPE SLEEVE AT BUILDING FOUNDATION
NTS

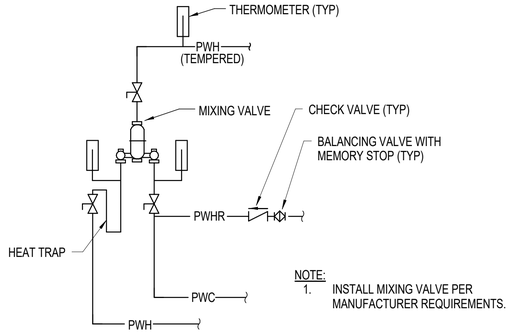

C3 MIXING VALVE DETAIL
NTS

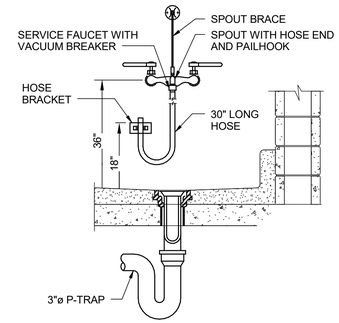

C4 TYPICAL MOP SINK DETAIL
NTS

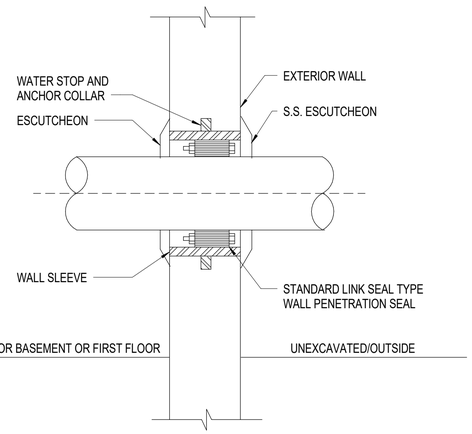

B3 WALL PENETRATION
NTS

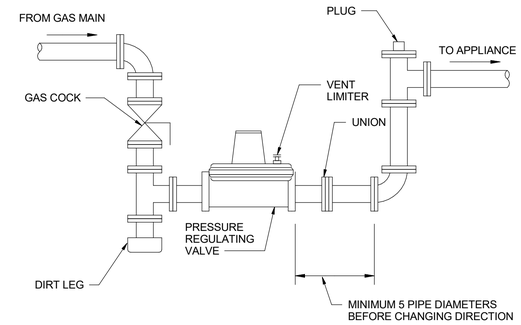

B4 GAS CONNECTION DETAIL
NTS

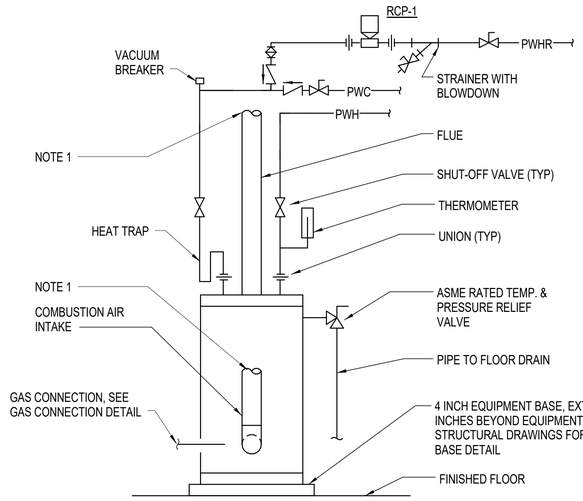

NOTE:
1. COMBUSTION AIR INTAKE AND FLUE UP THROUGH ROOF. TERMINATE PER MANUFACTURER REQUIREMENTS.

A1 GAS WATER HEATER DETAIL
NTS

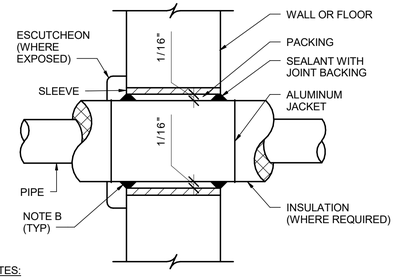

NOTES:
A. THIS DETAIL IS FOR NONFIRE-RATED CONSTRUCTION. PIPE PENETRATIONS IN FIRE-RATED CONSTRUCTION SHALL BE FIRESTOPPED WITH A UL-CLASSIFIED SYSTEM.
B. AT INSULATED WALLS PROVIDE PACKING AND SEALANT AT ANNULAR SPACE.

A3 TYPICAL PIPE PENETRATION THROUGH WALLS AND FLOORS
NTS

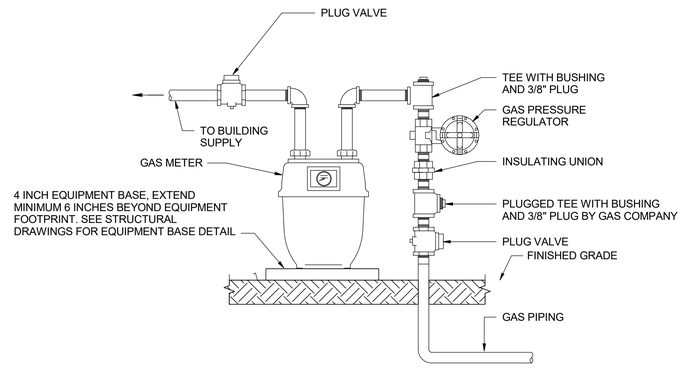

A4 GAS SERVICE DETAIL
NTS

C:\ref\20181013\8613-MCENTRAL_P-1395 MARINE HQ_mark.dimoff.rvt
6/25/2020 3:46:16 PM

SYM	DESCRIPTION	DATE	APPR

NAVFAC

MARK D. DIMOFF MECHANICAL SEAL 041351 ENGINEER NORTH CAROLINA 06/25/20 SEAL

HDR
440 S. CHURCH STREET, SUITE 1000
CHARLOTTE, NC 28202
TEL (704)338-6700
A/E INFO

APPROVED
FOR COMMANDER NAVFAC 7/10/2020
ACTIVITY
Approved by Emily Sylvester, Director of Installation Development Division
SATISFACTORY TO DATE 06/19/2020
DES MDD | DRW BNR | CHK CSW
PM/DM SGL/RMS
BRANCH MANAGER ALG
CHIEF ENG/ARCH EJA
FIRE PROTECTION

DEPARTMENT OF THE NAVY
NAVAL FACILITIES ENGINEERING COMMAND – MID-ATLANTIC
NAVAL FACILITIES ENGINEERING COMMAND CAMP LEJEUNE - JACKSONVILLE, NC
ALG
MARSOC
JACKSONVILLE, NORTH CAROLINA
P1395 MARINE RAIDER HEADQUARTERS
PLUMBING DETAILS

SCALE: AS NOTED
EPROJECT NO.: 1603164
CONSTR. CONTR. NO.
NAVFAC DRAWING NO.: 12794367
SHEET 148 OF 228

P-502

DRAWFORM REVISION: 17 APRIL 2018

PLUMBING FIXTURE CONNECTION SCHEDULE

MARK	FIXTURE DESCRIPTION	CONNECTION SIZE (IN)				GAL/CYCLE (GPC)	MOUNTING HEIGHT IN	ADA COMPLIANT	NOTES
		PWC	PWH	WASTE	VENT				
WC-1	WATER CLOSET	1	-	4	2	1.28	INST	-	-
WC-2	WATER CLOSET	1	-	4	2	1.28	INST	YES	-
L-2	LAVATORY	1/2	1/2	1-1/4	1-1/4	0.5	INST	YES	3,5
U-1	URINAL	-	-	2	-	0.125	INST	-	
EWC-1	WATER COOLER	1/2	-	1-1/4	1-1/4	-	INST	YES	
SH-1	SHOWER	1/2	1/2	2	1-1/2	2.5 GPM	INST	-	6
SH-2	SHOWER	1/2	1/2	2	1-1/2	2.5 GPM	INST	YES	6
MS-1	SINK, MOP	3/4	3/4	3	1-1/2	5 GPM	INST	-	
IMB-1	ICE MAKER BOX	1/2				INST			
S-1	KITCHEN/BREAKROOM SINK	1/2	1/2	1-1/4	1-1/4	1.5 GPM	INST	YES	3
CO	CLEANOUT	-	-	PLANS	-	-	-	-	
FCO/WCO	FLOOR CLEANOUT / WALL CLEANOUT	-	-	PLANS	-	-	FLUSH/30	-	1
GCO	GRADE CLEANOUT	-	-	PLANS	-	-	FLUSH	-	
FD	DRAIN, FLOOR	1/2	-	PLANS	PLANS	-	-1/2	-	2
HB-1	HOSE BIBB	3/4	-	-	-	-	36	-	4
WH-1	WALL HYDRANT	3/4	-	-	-	-	36	-	4

NOTES:
1. WHEN FLOOR MOUNTED, TOP SHALL BE FLUSH WITH THE FLOOR. WHEN MOUNTED VERTICALLY, MOUNT AT 30 INCHES AFF.
2. PROVIDE ASSE 1072 TRAP SEAL DEVICE.
3. PROVIDE FLOW LIMITING AERATOR.
4. MEASURE MOUNTING HEIGHT ON OUTLET SIDE OF HYDRANT/HOSE BIBB.
5. MIXING VALVE BELOW LAVATORY TO LIMIT TEMPERATURE TO 105F.
6. PROVIDE ASSE 1016 BALANCED PRESSURE VALVE WITH LIMIT STOP. SET LIMIT STOP TO DELIVER MAXIMUM 115F WATER.

PLANS: SEE PLANS FOR INFORMATION
SPECS: SEE INDICATED SPECIFICATION SECTION FOR INFORMATION
INST: REFER TO MANUFACTURER'S INSTALLATION INSTRUCTIONS

CONDENSING WATER HEATER SCHEDULE

MARK	LOCATION	DEG F RISE	LWT DEG F	RECOVERY (GPH)	GALLONS	ELECTRICAL		PROPANE				NOTES
						VOLT/PH	MOCP	INPUT (BTU/HR)	EFF	AIR INTAKE (IN)	FLUE (IN)	
GWH-1	MECH. SPACE	100	140	235	100	120/1	15	199,000	96%	3	3	1,2,3

NOTES:
1. DIRECT VENT
2. CONDENSATE NEUTRALIZATION TANK
3. INTEGRAL DISCONNECT

SEWAGE EJECTOR SUMP PUMP SCHEDULE

MARK	TYPE	CAPACITY PER PUMP		ELECTRICAL DATA PER PUMP		NOTES
		FLOW (GPM)	HEAD (FT WG)	HP	VOLT/PH	
SP-1	DUPLEX	53	24	1	480/3	1,2,3,4
SP-2						

NOTES:
1. NEMA 4X DISCONNECT SWITCH
2. NEMA 4X DUPLEX CONTROLLER FOR ALTERING PUMP CONTROL WITH HIGH LEVEL ALARM.
3. GAS-TIGHT FIBERGLASS BASIN - 36 INCH DIAMETER BY 72 INCH DEEP
4. RAIL GUIDES WITH STAINLESS STEEL LIFTING CHAIN OR CABLE

PUMP SCHEDULE

MARK	LOCATION	TYPE	FLOW (GPM)	HEAD (FT WG)	MOTOR DATA		NOTES
					WATTS	VOLTS/PH	
RCP-1	MECHANICAL ROOM	INLINE / CIRCULATING	4	20	60	115/1	1,2,3

NOTES:
1. ECM MOTOR
2. NEMA 3R DISCONNECT.
3. LEAD-FREE BRONZE OR STAINLESS STEEL DESIGN RATED FOR POTABLE WATER.

MIXING VALVE

MARK	SERVES	FLOW RATE (GPM)	PRESSURE DIFFERENTIAL (PSI)	SETPOINT (DEG F)	NOTES
MV-1	POTABLE WATER HOT	48	10.0	120	1,2

NOTES:
1. INTEGRAL STRAINER
2. DAIL THERMOMETER

APPR | DATE | SYM | DESCRIPTION

NAVFAC

MARK D. DIMOFF MECHANICAL SEAL 041351 ENGINEER NORTH CAROLINA
06/25/20
SEAL

HDR
440 S. CHURCH STREET, SUITE 1000
CHARLOTTE, NC 28202
TEL (704)338-6700
A/E INFO

APPROVED
FOR COMMANDER NAVFAC 7/10/2020
ACTIVITY
Approved by Emily Sylvester, Director of Installation Development Division
SATISFACTORY TO DATE 06/19/2020
DES MDD | DRW BNR | CHK CSW
PM/IM SGL/RMS
BRANCH MANAGER ALG
CHIEF ENG/ARCH EJA
FIRE PROTECTION

DEPARTMENT OF THE NAVY
NAVAL FACILITIES ENGINEERING COMMAND – MID-ATLANTIC
NAVAL FACILITIES ENGINEERING COMMAND
CAMP LEJEUNE - JACKSONVILLE, NC
ALG
MARSOC
JACKSONVILLE, NORTH CAROLINA
P1395 MARINE RAIDER HEADQUARTERS
PLUMBING SCHEDULES

SCALE: AS NOTED
EPROJECT NO.: 1603164
CONSTR. CONTR. NO.
NAVFAC DRAWING NO.
12794368
SHEET 149 OF 228
P-601
DRAWFORM REVISION: 17 APRIL 2018

C:\e\2016\10136813.MACENTRAL_P-1395 MARINE HQ_mark.dimoff.rvt
6/25/2020 3:46:19 PM

GENERAL NOTES

1. SEE PLUMBING FIXTURE CONNECTION SCHEDULE FOR PIPE SIZES TO INDIVIDUAL FIXTURES

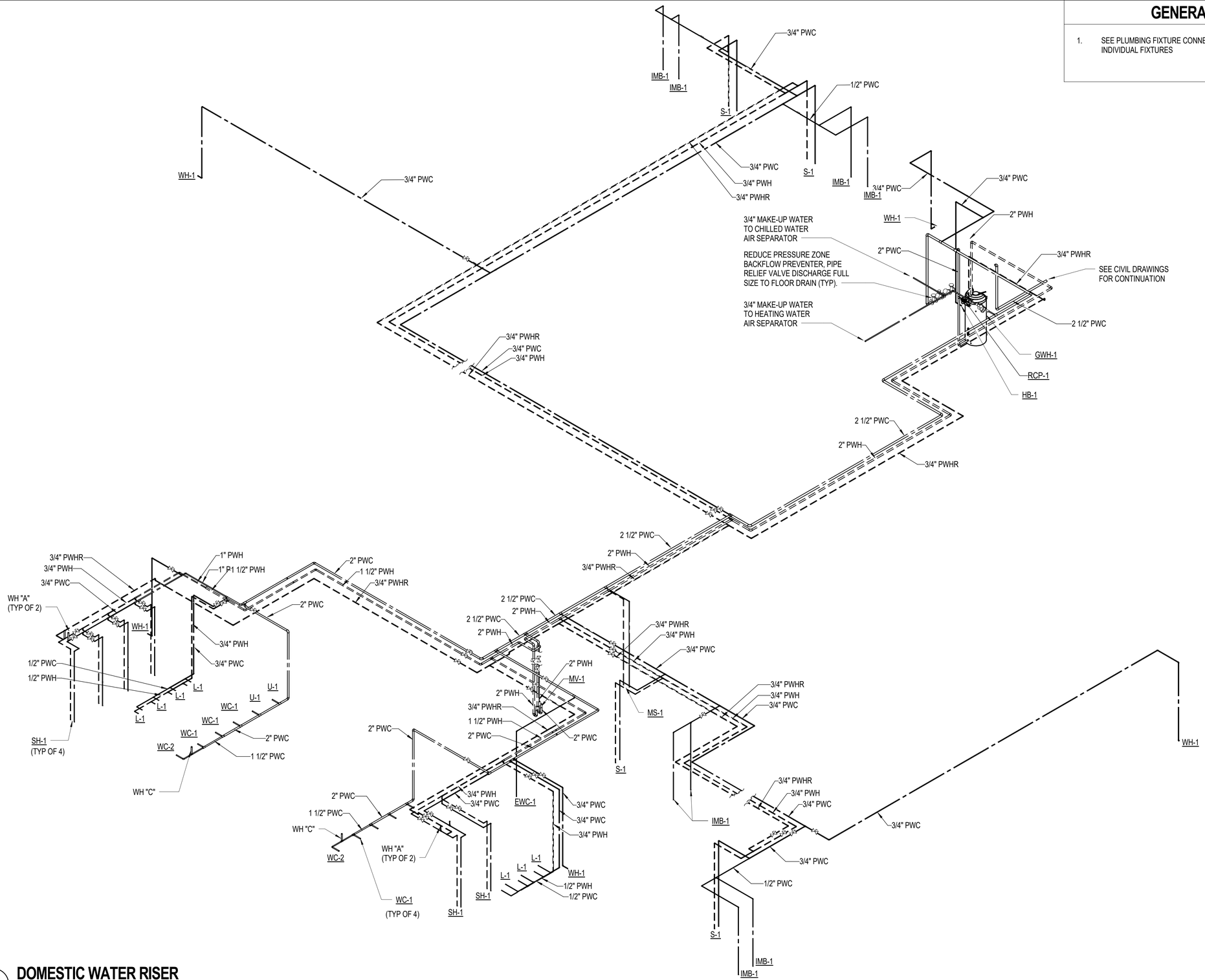

A1 **DOMESTIC WATER RISER**

NTS

SYM	DESCRIPTION	DATE	APPR

NAVFAC

MARK D. DIMOFF MECHANICAL SEAL 041351 ENGINEER NORTH CAROLINA 06/25/20 SEAL

HDR
440 S. CHURCH STREET, SUITE 1000
CHARLOTTE, NC 28202
TEL (704)338-6700

A/E INFO

APPROVED
FOR COMMANDER NAVFAC 7/10/2020

ACTIVITY
Approved by Emily Sylvester, Director of Installation Development Division

SATISFACTORY TO DATE 06/19/2020

DES MDD | DRW BNR | CHK CSW

PM/DM SGL/RMS

BRANCH MANAGER ALG

CHIEF ENG/ARCH EJA

FIRE PROTECTION

DEPARTMENT OF THE NAVY
NAVAL FACILITIES ENGINEERING COMMAND
NAVAL FACILITIES ENGINEERING COMMAND ~ MID-ATLANTIC
CAMP LEJEUNE - JACKSONVILLE, NC
ALG
MARSOC
JACKSONVILLE, NORTH CAROLINA
P1395 MARINE RAIDER HEADQUARTERS
DOMESTIC WATER RISER

SCALE: AS NOTED

EPROJECT NO.: 1603164

CONSTR. CONTR. NO.

NAVFAC DRAWING NO. 12794369

SHEET 150 OF 228

P-901

DRAWFORM REVISION: 17 APRIL 2018

C:\vvt\2016\10136813-M-CENTRAL_P-1395 MARINE HQ_mark.dimoff.rvt
6/25/2020 3:46:25 PM

GENERAL NOTES

1. SEE PLUMBING FIXTURE CONNECTION SCHEDULE FOR PIPE SIZES TO INDIVIDUAL FIXTURES

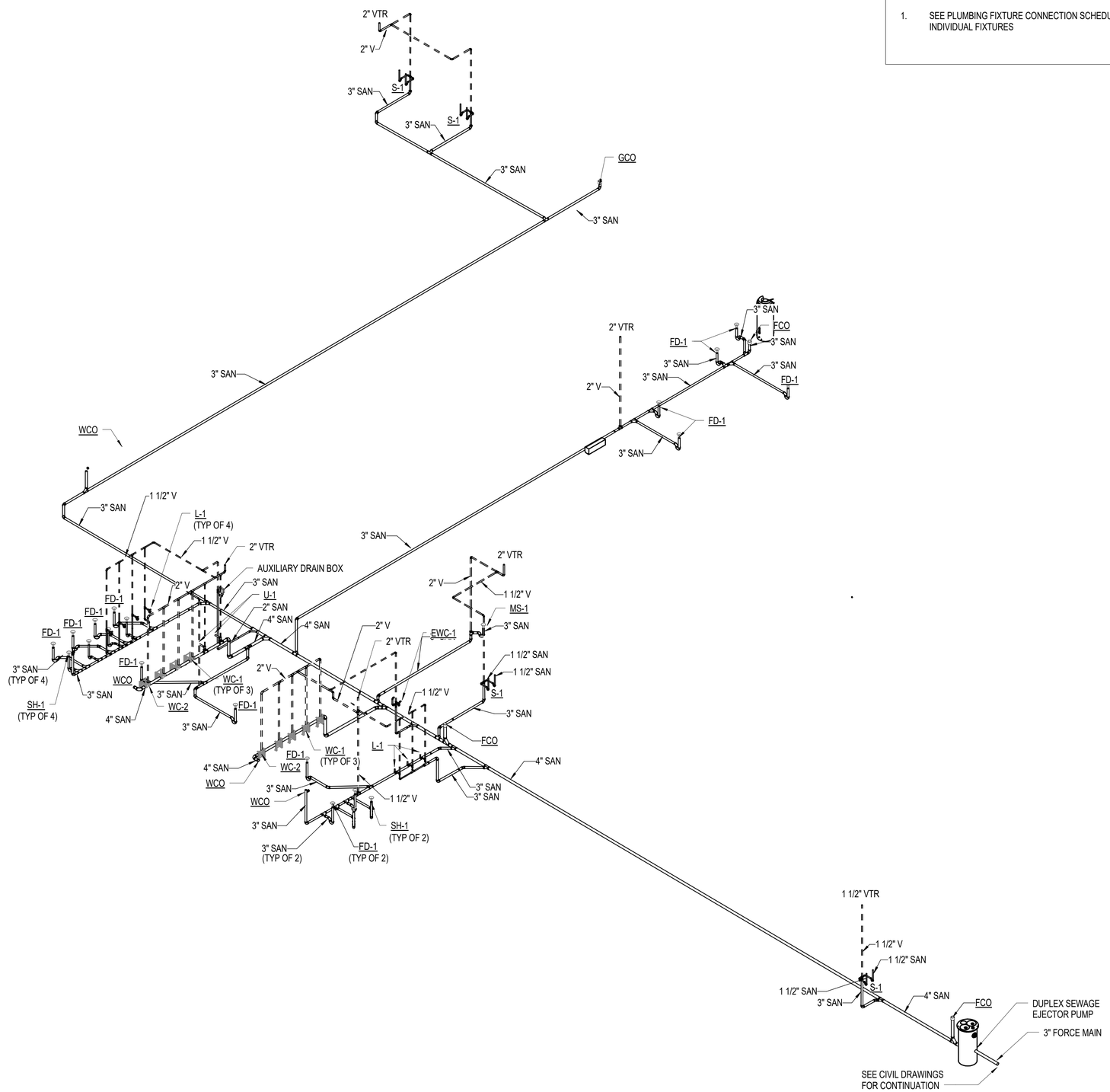

A1 **SANITARY RISER**

NTS

SYM	DESCRIPTION	DATE	APPR

NAVFAC

MARK D. DIMOFF MECHANICAL SEAL 041351 ENGINEER NORTH CAROLINA 06/25/20

SEAL

HDR
440 S. CHURCH STREET, SUITE 1000
CHARLOTTE, NC 28202
TEL (704)338-6700

A/E INFO

APPROVED

FOR COMMANDER NAVFAC 7/10/2020

ACTIVITY

Approved by Emily Sylvester, Director of Installation Development Division

SATISFACTORY TO DATE 06/19/2020

DES MDD | DRW BNR | CHK CSW

PM/DM SGL/RMS

BRANCH MANAGER ALG

CHIEF ENG/ARCH EJA

FIRE PROTECTION

DEPARTMENT OF THE NAVY
NAVAL FACILITIES ENGINEERING COMMAND
NAVAL FACILITIES ENGINEERING COMMAND ~ MID-ATLANTIC
CAMP LEJEUNE - JACKSONVILLE, NC
ALG

MARSOC
JACKSONVILLE, NORTH CAROLINA
P1395 MARINE RAIDER HEADQUARTERS

SANITARY RISER

SCALE: AS NOTED

EPROJECT NO.: 1603164

CONSTR. CONTR. NO.

NAVFAC DRAWING NO. 12794370

SHEET 151 OF 228

P-902

DRAWFORM REVISION: 17 APRIL 2018

C:\rvt\2016\101368\13-M-CENTRAL_P-1395 MARINE HQ_mark.dimoff.rvt
6/25/2020 3:46:28 PM

GENERAL NOTES

1. GAS REGULATOR SERVING BUILDING SET AT 2 PSI.
2. PIPING SHALL BE SCHEDULE 40 BLACK STEEL
3. SIZING BASED ON TOTAL GAS LOAD OF 1,700 MBH WITH A TOTAL EQUIVALENT LENGTH OF 100 FEET OF PIPE TO FARTHEST APPLIANCE WITH ALLOWABLE PRESSURE DROP OF 0.5 PSIG.
4. PROVIDE CONNECTIONS AT EACH GAS APPLIANCE FOR PRIMARY BURNERS AND PILOTS INCLUDING ALL ISOLATION VALVES, STRAINERS, AND APPLIANCE REGULATOR TO PROVIDE PRESSURE REQUIRED BY MANUFACTURER'S INSTALLATION INSTRUCTIONS.

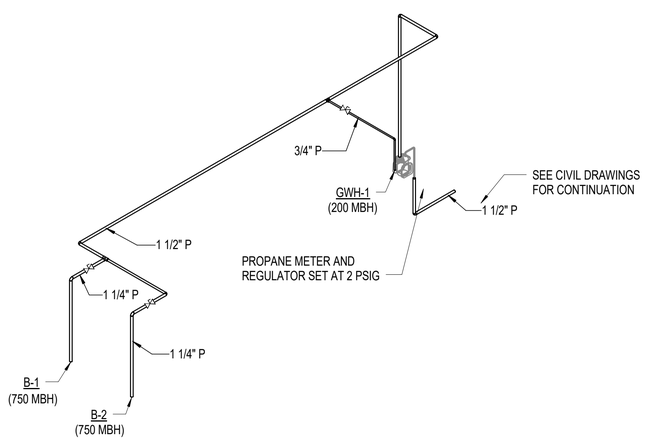

A2 **NATURAL GAS RISER**
NTS

SYM	DESCRIPTION	DATE	APPR

NAVFAC

MARK D. DIMOFF
MECHANICAL
SEAL
041351
ENGINEER
NORTH CAROLINA
06/25/20
SEAL

HDR
440 S. CHURCH STREET, SUITE 1000
CHARLOTTE, NC 28202
TEL (704)338-6700
A/E INFO

APPROVED
Approved by Emily Sylvester, Director of Installation Development Division
FOR COMMANDER NAVFAC 7/10/2020
ACTIVITY
Approved by Emily Sylvester, Director of Installation Development Division
SATISFACTORY TO DATE 06/19/2020
DES MDD DRW BNR CHK CSW
PM/DM SGL/RMS
BRANCH MANAGER ALG
CHIEF ENG/ARCH EJA
FIRE PROTECTION

DEPARTMENT OF THE NAVY
NAVAL FACILITIES ENGINEERING COMMAND
NAVAL FACILITIES ENGINEERING COMMAND ~ MID-ATLANTIC
CAMP LEJEUNE - JACKSONVILLE, NC
ALG
MARSOC
JACKSONVILLE, NORTH CAROLINA
P1395 MARINE RAIDER HEADQUARTERS
PROPANE GAS RISER

SCALE: AS NOTED
EPROJECT NO.: 1603164
CONSTR. CONTR. NO.
NAVFAC DRAWING NO. 12794371
SHEET 152 OF 228
P-903
DRAWFORM REVISION: 17 APRIL 2018

C:\vvt\2016\10136813-M-CENTRAL_P-1395 MARINE HQ_mark.dimoff.rvt
6/25/2020 3:46:29 PM

HVAC SYMBOLOGY

- 12x12 — RECTANGULAR DUCT
- 12ø — ROUND DUCT
- SUPPLY DUCT SECTION, RECTANGULAR
- RETURN DUCT SECTION, RECTANGULAR
- EXHAUST DUCT SECTION, RECTANGULAR
- 90° ELBOW TURNED UP, RECTANGULAR
- 90° ELBOW TURNED DOWN, RECTANGULAR
- 90° ELBOW TURNED UP, ROUND
- 90° ELBOW TURNED DOWN, ROUND
- TRANSITION - DOUBLE SIDED
- TRANSITION - ONE SIDED
- TRANSITION - RECTANGULAR TO ROUND DUCT
- R — RECTANGULAR DUCT INCLINE - RISE OR DROP IN RESPECT TO THE AIR FLOW
- R — ROUND DUCT INCLINE - RISE OR DROP IN RESPECT TO THE AIR FLOW
- ELBOW - W/TURNING VANE (RECTANGULAR)
- RADIUS ELBOW

- 24x18 — HIDDEN DUCT
- T 9'-10" / B 9'-0" / 18x10 — DUCT ELEVATION TAG ABOVE FINISH FLOOR
- PRESSURE/TEMPERATURE TEST PLUG (PETE PLUG OR EQUAL)
- SA — SOUND ATTENUATOR
- SUPPLY DIFFUSER (ROUND)
- SUPPLY AIR REGISTER OR GRILLE - W/DUCT-MOUNTED EXTRACTOR
- EXHAUST OR RETURN AIR REGISTER OR GRILLE

SIZE / SA12ø-250 / TAG / OR / FLOW RATE / SA-250 / 12ø

DIFFUSER, GRILLE OR REGISTER DESIGNATION TAG

- 12x12 — RETURN AIR GRILLE
- 12x12 — EXHAUST AIR GRILLE
- 12ø — SUPPLY DIFFUSER (NO ARROWS INDICATE 4-WAY)

- VD, BDD — VD = VOLUME DAMPER; BDD = BACKDRAFT DAMPER
- M — MOTOR OPERATED DAMPER
- 24x12 — FIRE DAMPER
- 24x12 — SMOKE DAMPER
- 24x12 — SMOKE AND FIRE DAMPER
- FLEXIBLE CONNECTION
- FLEXIBLE DUCT
- ACOUSTICAL LINING - DUCT DIMENSIONS FOR NET FREE AREA
- UC — UNDERCUT DOOR - SEE ARCHITECTURAL DOOR SCHEDULE

PIPING

- CWS — CHILLED WATER SUPPLY
- CWR — CHILLED WATER RETURN
- HWS — HEATING WATER SUPPLY
- HWR — HEATING WATER RETURN
- RL — REFRIGERANT LIQUID
- RS — REFRIGERANT SUCTION
- CD — CONDENSATE DRAIN

PIPING FITTINGS

- ELBOW, 90°
- ELBOW, 90° TURN DOWN
- ELBOW, 90° TURN UP
- TEE
- TEE, OUTLET UP
- TEE, OUTLET DOWN
- PIPE BREAK
- CAP
- BLIND FLANGE
- UNION
- FLOW ARROW
- CLEAN OUT

PIPING SPECIALTIES

- FLEXIBLE PIPE CONNECTION
- PRESSURE GAUGE WITH QUARTER TURN BALL VALVE
- PRESSURE/TEMPERATURE TEST PLUG
- STRAINER WITH BLOW DOWN
- THERMOMETER
- MANUAL AIR VENT
- A — AUTOMATIC AIR VENT

AIR FLOW SCHEMATIC AND TEMPERATURE CONTROL DIAGRAM SYMBOLOGY

- C/C — CHILLED WATER COOLING COIL
- H/C — HOT WATER HEATING COIL
- EP/R — DIRECT EVAPORATIVE COOLER
- D/X — DIRECT EXPANSION COOLING COIL
- EH/C — ELECTRIC HEATING COIL
- FB/C — FACE & BYPASS COIL
- GAS-FIRED DUCT FURNACE
- VFD — VFD (VARIABLE FREQUENCY DRIVE)
- CAV — CONSTANT AIR VOLUME BOX
- VAV — VARIABLE AIR VOLUME BOX
- EF — EXHAUST FAN
- SF — SUPPLY FAN
- GAS — GAS
- ELECT — ELECTRIC
- AI — ANALOG INPUT
- AO — ANALOG OUTPUT
- DI — DIGITAL INPUT
- DO — DIGITAL OUTPUT
- COMM — COMMUNICATION
- CT — CURRENT TRANSMITTER
- STARTER — MOTOR STARTER
- VFD — VARIABLE FREQUENCY DRIVE
- HP — DIRECT EXPANSION HEAT PUMP
- DX — DIRECT EXPANSION
- FS — FLOW SWITCH
- ESS — EMERGENCY SHUTDOWN SWITCH
- M — MOTOR
- T — THERMOSTAT
- H — HUMIDISTAT
- CO2 — CARBON DIOXIDE SENSOR
- S — SMOKE DETECTOR
- AFMS — AIRFLOW MEASUREMENT STATION
- T — TEMPERATURE SENSOR
- FRZ — FREEZE STAT
- ΔP — FILTER SENSOR
- M — MOTORIZED OPPOSED BLADE DAMPER
- GRAVITY DAMPER
- CO2 — CO2 SENSOR
- LOUVER

ABBREVIATIONS

ACC	AIR COOLED CHILLER
AD	ACCESS DOOR
ADJ	ADJUSTABLE
AFF	ABOVE FINISHED FLOOR
AFMS	AIRFLOW MEASUREMENT STATION
AI	ANALOG INPUT
ALT	ALTERNATIVE
AMB	AMBIENT
AO	ANALOG OUTPUT
APD	AIR PRESSURE DROP
AS	AIR SEPARATOR
AV	ANALOG VALUE
AVG	AVERAGE
BAS	BUILDING AUTOMATION SYSTEM
BHP	BRAKE HORSE POWER
BDD	BACK DRAFT DAMPER
BOD	BOTTOM OF DUCT
BOP	BOTTOM OF PIPE
BTUH	BRITISH THERMAL UNITS PER HOUR
CAV	CONSTANT AIR VOLUME
CFH	CUBIC FEET PER HOUR
CFM	CUBIC FEET PER MINUTE
CO	CLEAN OUT
CONN	CONNECTION
CONT	CONTINUOUS
CU	CONDENSING UNIT
CWS	CHILLED WATER SUPPLY
CWR	CHILLED WATER RETURN
CV	CONTROL VALVE
DB	DRY BULB
dB	DECIBEL(S)
DDC	DIRECT DIGITAL CONTROL
DEG F	DEGREES FAHRENHEIT
DI	DIGITAL INPUT
DIA	DIAMETER
DN	DOWN
DO	DIGITAL OUTPUT
DOAU	DEDICATED OUTDOOR AIR UNIT
DS	DIRT SEPARATOR
DV	DIGITAL VALUE
DX	DIRECT EXPANSION
EA	EXHAUST AIR
EAT	ENTERING AIR TEMPERATURE
EER	ENERGY EFFICIENCY RATIO
EF	EXHAUST FAN
EFF	EFFICIENCY
ERU	ENERGY RECOVERY UNIT
ESP	EXTERNAL STATIC PRESSURE
ESS	EMERGENCY SHUTOFF SWITCH
ET	EXPANSION TANK
EWT	ENTERING WATER TEMPERATURE
F	FAHRENHEIT
FA	FREE AREA
FCP	FAN CONTROL PANEL
FCU	FAN COIL UNIT
FLA	FULL LOAD AMPS
FPM	FEET PER MINUTE
FS	FLOW SWITCH
GAL	GALLONS
GPH	GALLONS PER HOUR
GPM	GALLONS PER MINUTE
HP	HORSE POWER
HR	HOUR
HTG	HEATING
HVAC	HEATING, VENTILATION, & AIR CONDITIONING
HWS	HEATING WATER SUPPLY
HWR	HEATING WATER RETURN
HZ	HERTZ
ID	INSIDE DIAMETER
IE	INVERT ELEVATION
IN	INCHES
I/O	INPUT/OUTPUT
KW	KILOWATT
LAT	LEAVING AIR TEMPERATURE
LB	POUNDS
L	LOUVER
LWT	LEAVING WATER TEMPERATURE
MAX	MAXIMUM
MBH	THOUSAND BTUH
MCA	MINIMUM CURRENT AMPACITY
MISC	MISCELLANEOUS
MIN	MINIMUM, MINUTES
MFG	MANUFACTURING
MOCP	MAXIMUM OVERCURRENT DEVICE
MOD	MOTOR OPERATED DAMPER
NC	NORMALLY CLOSED, NOISE CRITERIA
NO	NORMALLY OPEN
NTS	NOT TO SCALE
OA	OUTSIDE AIR
OD	OUTSIDE DIAMETER
PD	PRESSURE DROP
PH	PHASE
PLBG	PLUMBING
PSI	POUNDS PER SQUARE INCH
PSIA	POUNDS PER SQUARE INCH ABSOLUTE
PSIG	POUNDS PER SQUARE INCH GAUGE
QTY	QUANTITY
RA	RETURN AIR
REQD	REQUIRED
RH	RELATIVE HUMIDITY
RPM	REVOLUTIONS PER MINUTE
SA	SUPPLY AIR, SOUND ATTENUATOR
SCFM	STANDARD CUBIC FEET PER MINUTE
SF	SUPPLY FAN, SQUARE FEET
SP	STATIC PRESSURE
SQ	SQUARE
TD	TEMPERATURE DIFFERENTIAL
TEMP	TEMPERATURE, TEMPORARY
TYP	TYPICAL
UH	UNIT HEATER
UNO	UNLESS NOTED OTHERWISE
V	VOLTS
VAV	VARIABLE AIR VOLUME
VFD	VARIABLE FREQUENCY DRIVE
W	WATTS
WB	WET BULB
WC	WATER COLUMN
WPD	WATER PRESSURE DROP

PIPING VALVES

- ISOLATION VALVE
- HOSE VALVE WITH CAP
- CHECK VALVE
- BALANCING VALVE
- CALIBRATED BALANCING VALVE
- SAFETY OR PRESSURE RELIEF, ANGLE VALVE
- SAFETY OR PRESSURE RELIEF, STRAIGHT THROUGH VALVE
- PRESSURE REDUCING VALVE (PRV)

GENERAL NOTES

1. PROVIDE AND INSTALL ALL MECHANICAL SYSTEMS IN ACCORDANCE WITH THE UNIFIED FACILITIES CRITERIA, INTERNATIONAL MECHANICAL CODE, AND ALL OTHER APPLICABLE STATE AND LOCAL CODES.
2. CONTRACT DOCUMENT DRAWINGS FOR MECHANICAL WORK (HVAC) ARE DIAGRAMMATIC AND ARE INTENDED TO CONVEY SCOPE AND GENERAL ARRANGEMENT ONLY. PLANS SHOULD NOT BE SCALED.
3. INSTALL ALL MECHANICAL EQUIPMENT AND APPURTENANCES IN ACCORDANCE WITH MANUFACTURERS' RECOMMENDATIONS.
4. VERIFY ALL CLEARANCES BEFORE FABRICATING AND INSTALLING WORK. COORDINATE WITH ALL OTHER TRADES.
5. DRAWINGS REFLECT DIMENSIONS OF DESIGN MFG. EQUIPMENT. ALLOWABLE ALTERNATES, WHILE EQUAL IN OUTPUT CAPACITY WILL BE THE RESPONSIBILITY OF THE CONTRACTOR TO MEET THE SPACE REQUIREMENTS AND PROVE EQUALITY WITH DESIGN MFG. EQUIPMENT.
6. TESTING, ADJUSTING, AND BALANCING AGENCY SHALL BE A MEMBER OF THE ASSOCIATED AIR BALANCE COUNCIL (AABC) OR THE NATIONAL ENVIRONMENTAL BALANCING BUREAU (NEBB). TESTING ADJUSTING AND BALANCING SHALL BE PERFORMED IN ACCORDANCE WITH THE AABC STANDARDS.
7. COORDINATE ALL EQUIPMENT CONNECTIONS WITH MANUFACTURER'S CERTIFIED DRAWINGS. COORDINATE AND PROVIDE ALL DUCT AND PIPING TRANSITIONS REQUIRED FOR FINAL EQUIPMENT CONNECTIONS TO FURNISHED EQUIPMENT. FIELD VERIFY AND COORDINATE ALL DUCT AND PIPING DIMENSIONS BEFORE FABRICATION.
8. ALL CONTROL WIRE AND CONDUIT SHALL COMPLY WITH THE INTERNATIONAL ELECTRICAL CODE (IEC) AND NFPA 70.
9. ALL MISCELLANEOUS STEEL REQUIRED TO ENSURE PROPER INSTALLATION AND AS SHOWN IN DETAILS FOR PIPING, DUCTWORK, AND EQUIPMENT (UNLESS OTHERWISE NOTED) SHALL BE FURNISHED AND INSTALLED BY THE MECHANICAL CONTRACTOR.
10. PROVIDE ACCESS PANELS FOR INSTALLATION IN DUCTWORK, WALLS AND CEILINGS, WHERE REQUIRED, TO SERVICE CONTROLS DEVICES, DAMPERS, VALVES, DUCTWORK, SMOKE DETECTORS, AND OTHER CONCEALED MECHANICAL EQUIPMENT. ACCESS PANEL INSTALLATION SHALL BE COORDINATED WITH PROCESS REQUIREMENTS, ARCHITECTURAL WORK TO MATCH MATERIALS AND FINISHES.
11. ALL DUCTWORK, PIPING, AND EQUIPMENT SUPPORTED FROM STRUCTURAL STEEL SHALL BE COORDINATED WITH ALL TRADES. ALL ATTACHMENTS TO STEEL BAR JOISTS, TRUSSES, OR JOIST GIRDERS SHALL BE AT PANEL POINTS OR AS SHOWN ON THE MECHANICAL AND STRUCTURAL DRAWINGS. PROVIDE BEAM CLAMPS MEETING MSS STANDARDS. WELDING TO STRUCTURAL MEMBERS SHALL NOT BE PERMITTED.
12. PROVIDE FLEXIBLE CONNECTIONS IN ALL DUCTWORK AND PIPING SYSTEMS CONNECTED TO FANS, PUMPS AND OTHER EQUIPMENT WHICH REQUIRE VIBRATION ISOLATION.
13. DUCTWORK SHALL BE FABRICATED AND INSTALLED PER LATEST SMACNA STANDARDS.

SYM	DESCRIPTION	DATE	APPR

NAVFAC

MARK D. DIMOFF — MECHANICAL — SEAL 041351 — ENGINEER — NORTH CAROLINA — 06/25/20 — SEAL

HDR
440 S. CHURCH STREET, SUITE 1000
CHARLOTTE, NC 28202
TEL (704)338-6700
A/E INFO

APPROVED
FOR COMMANDER NAVFAC 7/10/2020
ACTIVITY
Approved by Emily Sylvester, Director of Installation Development Division
SATISFACTORY TO DATE 06/19/2020
DES MDD | DRW BNR | CHK CSW
PM/DM SGL/RMS
BRANCH MANAGER ALG
CHIEF ENG/ARCH EJA
FIRE PROTECTION

DEPARTMENT OF THE NAVY
NAVAL FACILITIES ENGINEERING COMMAND
ALG
NAVAL FACILITIES ENGINEERING COMMAND ~ MID-ATLANTIC
CAMP LEJEUNE ~ JACKSONVILLE, NC
MARSOC
JACKSONVILLE, NORTH CAROLINA
P1395 MARINE RAIDER HEADQUARTERS
LEGEND, ABBREVIATIONS AND NOTES

SCALE: AS NOTED
EPROJECT NO.: 1603164
CONSTR. CONTR. NO.
NAVFAC DRAWING NO. 12794372
SHEET 153 OF 228
M-001
DRAWFORM REVISION: 17 APRIL 2018

C:\rvt\2016\19136813-M-CENTRAL_P-1395 MARINE HQ_mark.dimoff.rvt
6/25/2020 3:44:49 PM

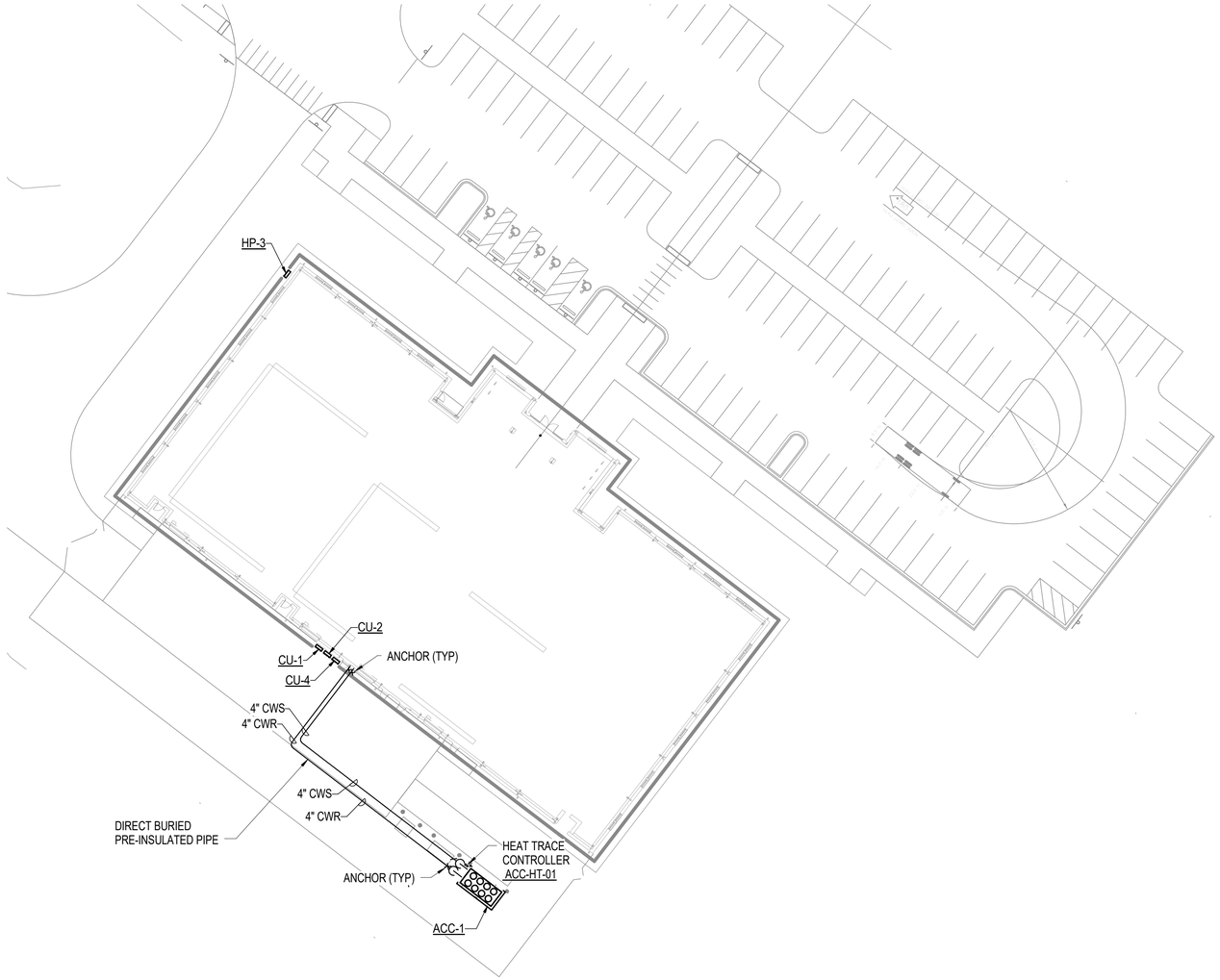

A1 MECHANICAL SITE PLAN

1" = 30'-0"



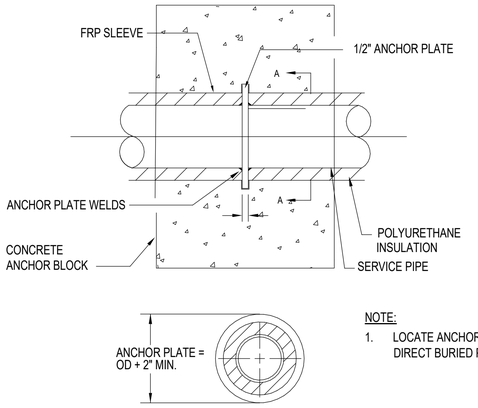

NOTE:
1. LOCATE ANCHORS AS REQUIRED BY DIRECT BURIED PIPE MANUFACTURER

C4 ROUND ANCHOR ASSEMBLY DETAIL - DIRECT BURIED CHILLED WATER

NOT TO SCALE

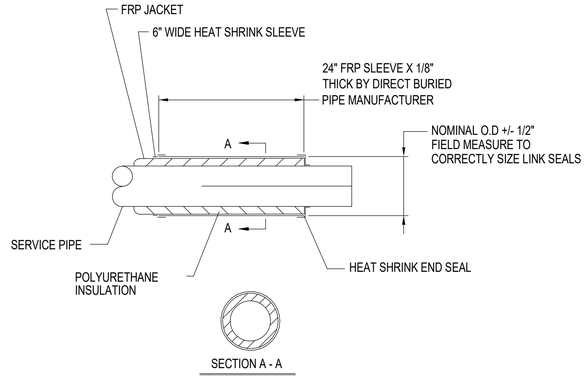

B4 END SEAL FRP SLEEVE DETAIL - DIRECT BURIED CHILLED WATER

NOT TO SCALE

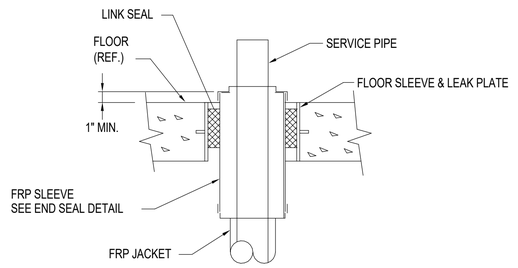

A4 END SEAL LINK SEAL DETAIL - DIRECT BURIED CHILLED WATER

NOT TO SCALE

SYM	DESCRIPTION	DATE	APPR

NAVFAC

MARK D. DIMOFF
MECHANICAL
SEAL
041351
ENGINEER
NORTH CAROLINA
06/25/20
SEAL

HDR
440 S. CHURCH STREET, SUITE 1000
CHARLOTTE, NC 28202
TEL (704)338-6700
A/E INFO

APPROVED
FOR COMMANDER NAVFAC 7/10/2020

ACTIVITY
Approved by Emily Sylvester, Director of Installation Development Division

SATISFACTORY TO DATE 06/19/2020

DES	MDD	DRW	BNR	CHK	CSW
PM/DM	SGL/RMS				
BRANCH MANAGER	ALG				
CHIEF ENG/ARCH	EJA				
FIRE PROTECTION					

DEPARTMENT OF THE NAVY
NAVAL FACILITIES ENGINEERING COMMAND
NAVAL FACILITIES ENGINEERING COMMAND ~ MID-ATLANTIC
CAMP LEJEUNE - JACKSONVILLE, NC
ALG
MARSOC
JACKSONVILLE, NORTH CAROLINA
P1395 MARINE RAIDER HEADQUARTERS
MECHANICAL SITE PLAN

SCALE: AS NOTED
EPROJECT NO.: 1603164
CONSTR. CONTR. NO.
NAVFAC DRAWING NO. 12794373
SHEET 154 OF 228
MS101
DRAWFORM REVISION: 17 APRIL 2018

C:\vvt\2016\10136813-M-CENTRAL_P-1395 MARINE HQ_mark.dimoff.rvt
6/25/2020 3:45:57 PM

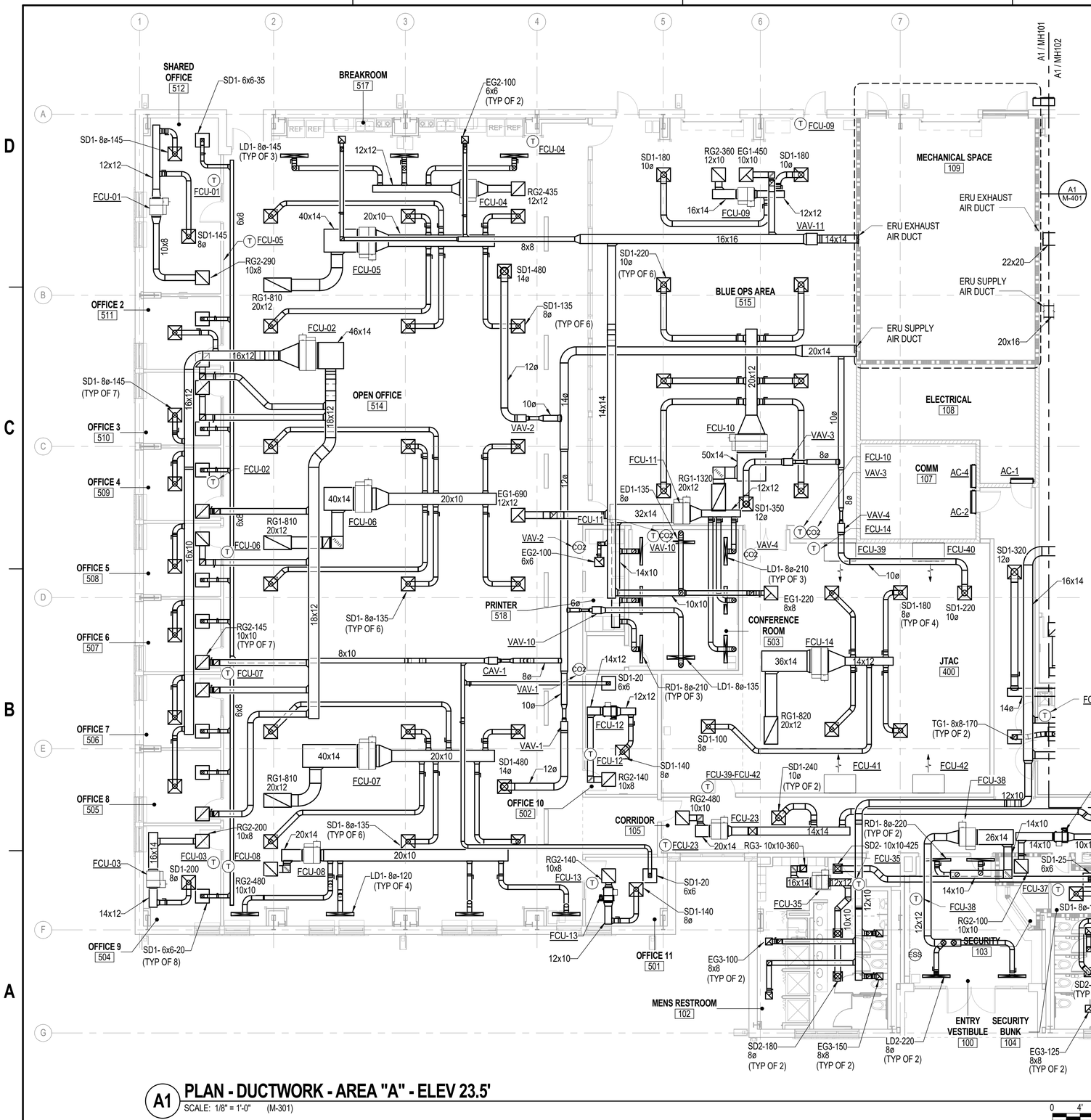

A1 PLAN - DUCTWORK - AREA "A" - ELEV 23.5'
SCALE: 1/8" = 1'-0" (M-301)

GENERAL NOTES

1. ALL DUCTWORK AND EQUIPMENT SHOWN ON THIS DRAWING IS DIAGRAMMATIC. LOCATE ALL DUCTWORK AND EQUIPMENT SO AS TO CLEAR ALL OBSTACLES.
2. ALL WORK TO BE PREFORMED IN ACCORDANCE WITH APPLICABLE FEDERAL, STATE, AND LOCAL CODES.
3. COORDINATE ALL HVAC INSTALLATIONS WITH ALL APPLICABLE TRADES.
4. VERIFY ALL DIMENSIONS AND CONDITIONS PRIOR TO THE START OF INSTALLATION OF ALL MECHANICAL AND PLUMBING EQUIPMENT. CONSTRUCTION DISCREPANCIES TO BE BROUGHT TO THE IMMEDIATE ATTENTION OF THE CONTRACTING OFFICER FOR A RESOLUTION.
5. COORDINATE ALL REQUIRED CONDUIT, PIPING AND CHASES FOR GOVERNMENT FURNISHED GOVERNMENT INSTALLED EQUIPMENT WITH THE GOVERNMENT.
6. REFER TO THE ARCHITECTURAL REFLECTED CEILING PLAN DRAWINGS FOR LOCATION OF CEILING COMPONENTS INCLUDING DIFFUSERS, REGISTERS, LIGHTS, SPRINKLERS, FIRE ALARM DEVICES, ETC.
7. ALL DUCT BRANCH RUNOUTS TO AIR TERMINAL SHALL BE FULL SIZE OF DIFFUSER OR GRILLE CONNECTION UNLESS INDICATED OTHERWISE.
8. INSTALL MANUAL BALANCING DAMPERS IN ALL BRANCH RUNOUTS. MANUAL BALANCING DAMPERS FOR DIFFUSERS AND GRILLES OFF BOTTOM DUCT MAIN SHALL HAVE MANUAL BALANCING DAMPER PROVIDED IN VERTICAL DUCT. MANUAL BALANCING DAMPERS SHALL BE PROVIDED AT DUCT MAIN WHEN LOCATED ABOVE ACCESSIBLE CEILING. MANUAL BALANCING DAMPERS LOCATED ABOVE INACCESSIBLE CEILING SHALL BE PROVIDED IN THE NECK OF THE DIFFUSER OR GRILLE CONNECTION.
9. LINEAR DIFFUSERS SHALL BE EQUALLY SPACED AND ALIGNED WITH ADJACENT DIFFUSERS.

WALL RATING LEGEND

- NON-RATED WALL
- 1 HR RATED PARTITION
- SMOKE PARTITION

KEY PLAN

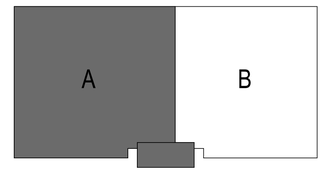

PLAN NORTH

SYM	DESCRIPTION	DATE	APPR

NAVFAC

MARK D. DIMOFF MECHANICAL SEAL 041351 ENGINEER NORTH CAROLINA 06|25|20 SEAL

HDR
440 S. CHURCH STREET, SUITE 1000
CHARLOTTE, NC 28202
TEL (704)338-6700
A/E INFO

APPROVED
FOR COMMANDER NAVFAC 7/01/2020
ACTIVITY
Approved by Emily Sylvester, Director of Installation Development Division
SATISFACTORY TO DATE 06/19/2020

DES	MDD	DRW	BNR	CHK	CSW

PM/DM	SGL/RMS
BRANCH MANAGER	ALG
CHIEF ENG/ARCH	EJA
FIRE PROTECTION	

DEPARTMENT OF THE NAVY
NAVAL FACILITIES ENGINEERING COMMAND – MID-ATLANTIC
ALG
CAMP LEJEUNE - JACKSONVILLE, NC
MARSOC
JACKSONVILLE, NORTH CAROLINA
P1395 MARINE RAIDER HEADQUARTERS
DUCTWORK FLOOR PLAN - AREA "A"

SCALE:	AS NOTED
EPROJECT NO.:	1603164
CONSTR. CONTR. NO.	
NAVFAC DRAWING NO.	12794374
SHEET	155 OF 228

MH101

DRAWFORM REVISION: 17 APRIL 2018

C:\ref\2016\101\36813-MCENTRAL_P-1395 MARINE HQ_mark.dimoff.rvt
6/25/2020 3:45:33 PM

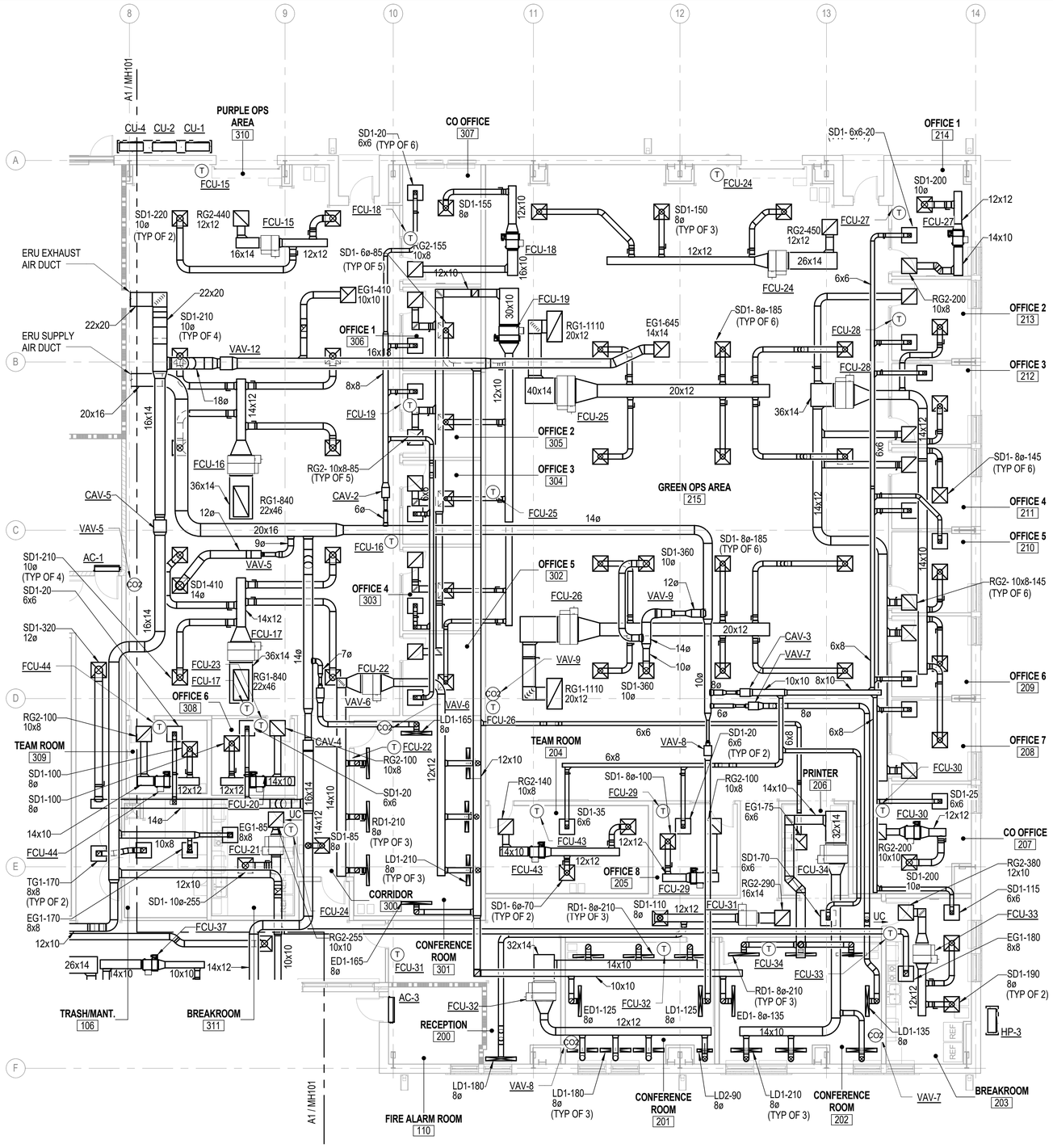

A1 **PLAN - DUCTWORK - AREA "B" - ELEV 23.5'**

SCALE: 1/8" = 1'-0" (M-301)

0 4' 8' 16'

GENERAL NOTES

1. ALL DUCTWORK AND EQUIPMENT SHOWN ON THIS DRAWING IS DIAGRAMMATIC. LOCATE ALL DUCTWORK AND EQUIPMENT SO AS TO CLEAR ALL OBSTACLES.
2. ALL WORK TO BE PREFORMED IN ACCORDANCE WITH APPLICABLE FEDERAL, STATE, AND LOCAL CODES.
3. COORDINATE ALL HVAC INSTALLATIONS WITH ALL APPLICABLE TRADES.
4. VERIFY ALL DIMENSIONS AND CONDITIONS PRIOR TO THE START OF INSTALLATION OF ALL MECHANICAL AND PLUMBING EQUIPMENT. CONSTRUCTION DISCREPANCIES TO BE BROUGHT TO THE IMMEDIATE ATTENTION OF THE CONTRACTING OFFICER FOR A RESOLUTION.
5. COORDINATE ALL REQUIRED CONDUIT, PIPING AND CHASES FOR GOVERNMENT FURNISHED GOVERNMENT INSTALLED EQUIPMENT WITH THE GOVERNMENT.
6. REFER TO THE ARCHITECTURAL REFLECTED CEILING PLAN DRAWINGS FOR LOCATION OF CEILING COMPONENTS INCLUDING DIFFUSERS, REGISTERS, LIGHTS, SPRINKLERS, FIRE ALARM DEVICES, ETC.
7. ALL DUCT BRANCH RUNOUTS TO AIR TERMINAL SHALL BE FULL SIZE OF DIFFUSER OR GRILLE CONNECTION UNLESS INDICATED OTHERWISE.
8. INSTALL MANUAL BALANCING DAMPERS IN ALL BRANCH RUNOUTS. MANUAL BALANCING DAMPERS FOR DIFFUSERS AND GRILLES OFF BOTTOM DUCT MAIN SHALL HAVE MANUAL BALANCING DAMPER PROVIDED IN VERTICAL DUCT. MANUAL BALANCING DAMPERS SHALL BE PROVIDED AT DUCT MAIN WHEN LOCATED ABOVE ACCESSIBLE CEILING. MANUAL BALANCING DAMPERS LOCATED ABOVE INACCESSIBLE CEILING SHALL BE PROVIDED IN THE NECK OF THE DIFFUSER OR GRILLE CONNECTION.
9. LINEAR DIFFUSERS SHALL BE EQUALLY SPACED AND ALIGNED WITH ADJACENT DIFFUSERS.

WALL RATING LEGEND

- NON-RATED WALL
- 1 HR RATED PARTITION
- SMOKE PARTITION

KEY PLAN

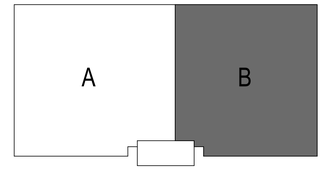

PLAN NORTH

SYM	DESCRIPTION	DATE	APPR

NAVFAC

MARK P. DIMOFF MECHANICAL ENGINEER SEAL 041351 NORTH CAROLINA 06/25/20

HDR
440 S. CHURCH STREET, SUITE 1000
CHARLOTTE, NC 28202
TEL (704)338-6700

A/E INFO

APPROVED
FOR COMMANDER NAVFAC 7/10/2020

ACTIVITY
Approved by Emily Sylvester, Director of Installation Development Division

SATISFACTORY TO	DATE	06/19/2020
DES MDD	DRW BNR	CHK CSW
PM/DM	SGL/RMS	
BRANCH MANAGER	ALG	
CHIEF ENG/ARCH	EJA	
FIRE PROTECTION		

DEPARTMENT OF THE NAVY
NAVAL FACILITIES ENGINEERING COMMAND
NAVAL FACILITIES ENGINEERING COMMAND ~ MID-ATLANTIC
CAMP LEJEUNE · JACKSONVILLE, NC
ALG MARSOC
JACKSONVILLE, NORTH CAROLINA
P1395 MARINE RAIDER HEADQUARTERS
DUCTWORK FLOOR PLAN - AREA "B"

SCALE:	AS NOTED
EPROJECT NO.:	1603164
CONSTR. CONTR. NO.	
NAVFAC DRAWING NO.	12794375
SHEET	156 OF 228

MH102

DRAWFORM REVISION: 17 APRIL 2018

C:\rvt\2018\0136813-M-CENTRAL_P-1395 MARINE HQ_mark.dimoff.rvt
6/25/2020 3:59:47 PM

2" VTR, SEE PLUMBING DRAWINGS

EH-1

BOILER COMBUSTION AIR INTAKE

BOILER VENT

EH-2

2" VTR, SEE PLUMBING DRAWINGS

2" VTR, SEE PLUMBING DRAWINGS

2" VTR, SEE PLUMBING DRAWINGS

2" VTR, SEE PLUMBING DRAWINGS

2" VTR, SEE PLUMBING DRAWINGS

A1 ROOF PLAN

SCALE: 3/32" = 1'-0"

0 6' 12' 24'

KEY PLAN

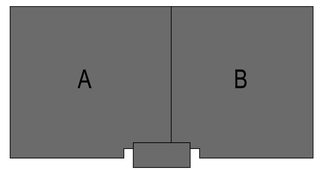

PLAN NORTH

SYM	DESCRIPTION	DATE	APPR

NAVFAC

MARK D. DIMOFF MECHANICAL SEAL 041351 ENGINEER NORTH CAROLINA 06/25/20 SEAL

HDR
440 S. CHURCH STREET, SUITE 1000
CHARLOTTE, NC 28202
TEL (704)338-6700
A/E INFO

APPROVED

FOR COMMANDER NAVFAC 7/10/2020

ACTIVITY

Approved by Emily Sylvester, Director of Installation Development Division

SATISFACTORY TO DATE	06/19/2020
DES MDD	DRW BNR CHK CSW
PM/OM	SGL/RMS
BRANCH MANAGER	ALG
CHIEF ENG/ARCH	EJA
FIRE PROTECTION	

DEPARTMENT OF THE NAVY
NAVAL FACILITIES ENGINEERING COMMAND – MID-ATLANTIC
NAVAL FACILITIES ENGINEERING COMMAND CAMP LEJEUNE - JACKSONVILLE, NC
ALG
MARSOC
JACKSONVILLE, NORTH CAROLINA

P1395 MARINE RAIDER HEADQUARTERS

ROOF PLAN

SCALE:	AS NOTED
EPROJECT NO.:	1603164
CONSTR. CONTR. NO.	
NAVFAC DRAWING NO.	12794376
SHEET	157 OF 228

MH103

DRAWFORM REVISION: 17 APRIL 2018

C:\e\2016\101396\13-MACENTRAL_P-1395 MARINE HQ_mark.dimoff.rvt
6/25/2020 3:45:42 PM

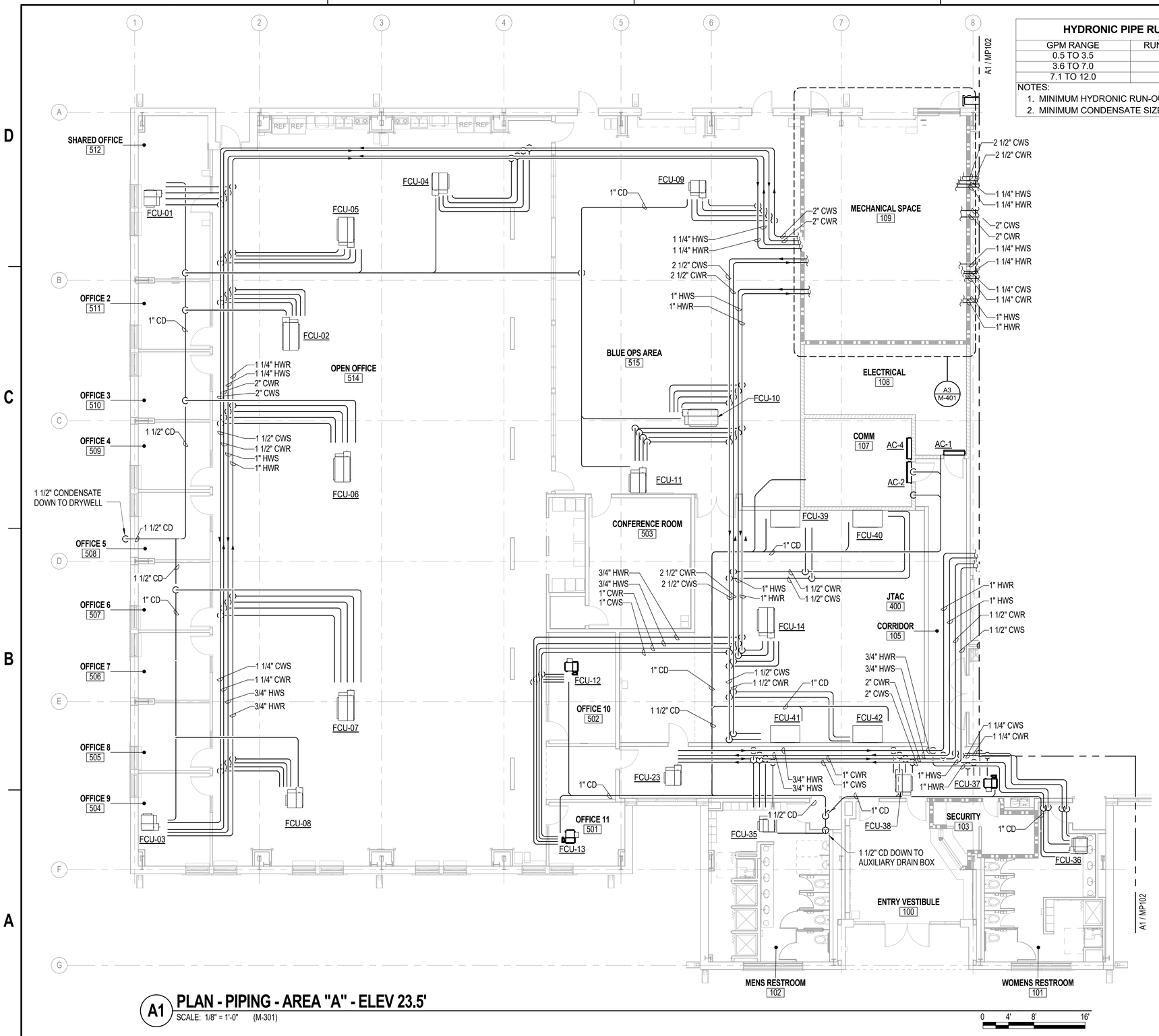

A1 PLAN - PIPING - AREA "A" - ELEV 23.5'

SCALE: 1/8" = 1'-0" (M-301)

0 4' 8' 16'

HYDRONIC PIPE RUN-OUT	
GPM RANGE	RUN-OUT PIPE SIZE
0.5 TO 3.5	3/4"
3.6 TO 7.0	1"
7.1 TO 12.0	1-1/4"

NOTES:
1. MINIMUM HYDRONIC RUN-OUT SHALL BE 3/4"
2. MINIMUM CONDENSATE SIZE SHALL BE 1"

GENERAL NOTES

1. ALL PIPING AND EQIUPMENT SHOWN ON THIS DRAWING IS DIAGRAMMATIC. LOCATE ALL DUCTWORK AND EQUIPMENT SO AS TO CLEAR ALL OBSTACLES.
2. ALL WORK TO BE PREFORMED IN ACCORDANCE WITH APPLICABLE FEDERAL, STATE, AND LOCAL CODES.
3. COORDINATE ALL HVAC INSTALLATIONS WITH ALL APPLICABLE TRADES.
4. VERIFY ALL DIMENSIONS AND CONDITIONS PRIOR TO THE START OF INSTALLATION OF ALL MECHANICAL AND PLUMBING EQUIPMENT. CONSTRUCTION DISCREPANCIES TO BE BROUGHT TO THE IMMEDIATE ATTENTION OF THE CONTRACTING OFFICER FOR A RESOLUTION.
5. COORDINATE ALL REQUIRED CONDUIT, PIPING AND CHASES FOR GOVERNMENT FURNISHED GOVERMENT INSTALLED EQUIPMENT WITH THE GOVERNMENT.

WALL RATING LEGEND

NON-RATED WALL

1 HR RATED PARTITION

SMOKE PARTITION

KEY PLAN

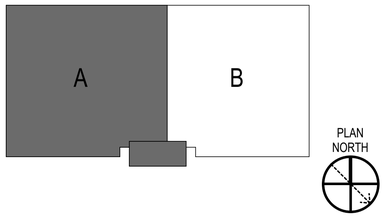

SYM	DESCRIPTION	DATE	APPR

NAVFAC

MARK D. DIMOFF MECHANICAL SEAL 041351 ENGINEER NORTH CAROLINA 06/25/20

HDR
440 S. CHURCH STREET, SUITE 1000
CHARLOTTE, NC 28202
TEL (704)338-6700

A/E INFO

APPROVED

FOR COMMANDER NAVFAC 7/10/2020

ACTIVITY

Approved by Emily Sylvester, Director of Installation Development Division

SATISFACTORY TO DATE 06/19/2020

DES MDD DRW BNR CHK CSW

PM/DM SGL/RMS

BRANCH MANAGER ALG

CHIEF ENG/ARCH EJA

FIRE PROTECTION

DEPARTMENT OF THE NAVY
NAVAL FACILITIES ENGINEERING COMMAND
NAVAL FACILITIES ENGINEERING COMMAND ~ MID-ATLANTIC
CAMP LEJEUNE - JACKSONVILLE, NC
ALG
MARSOC
JACKSONVILLE, NORTH CAROLINA
P1395 MARINE RAIDER HEADQUARTERS
MECHANICAL PIPING FLOOR PLAN - AREA "A"

SCALE: AS NOTED

EPROJECT NO.: 1603164

CONSTR. CONTR. NO.:

NAVFAC DRAWING NO. 12794377

SHEET 158 OF 228

MP101

DRAWFORM REVISION: 17 APRIL 2018

C:\rvt\2016\10136813-M-CENTRAL_P-1395 MARINE HQ_mark.dimoff.rvt
6/25/2020 3:45:48 PM

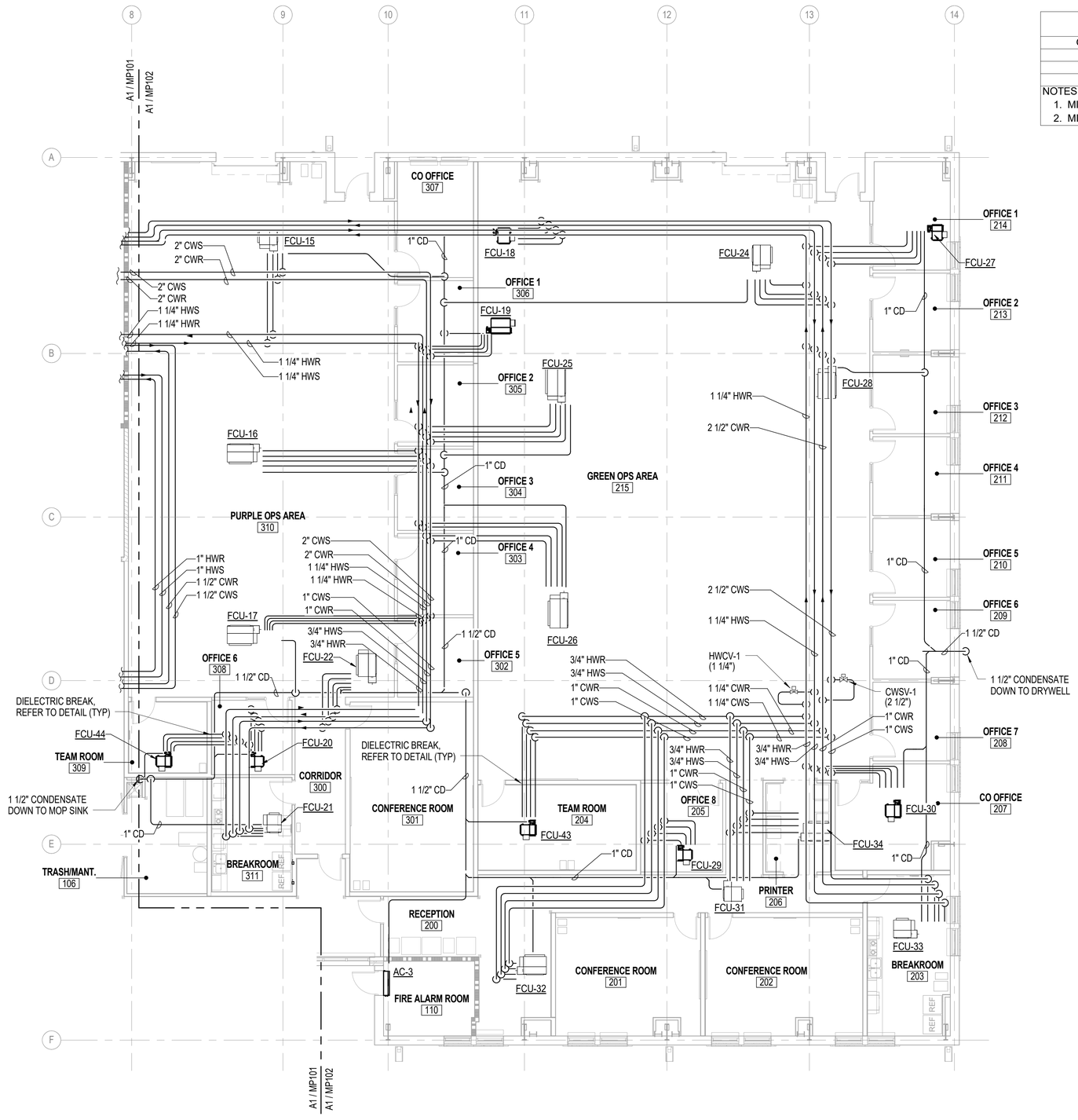

A1 PLAN - PIPING AREA "B" - ELEV 23.5'

SCALE: 1/8" = 1'-0" (M-301)

0 4' 8' 16'

HYDRONIC PIPE RUN-OUT	
GPM RANGE	RUN-OUT PIPE SIZE
0.5 TO 3.5	3/4"
3.6 TO 7.0	1"
7.1 TO 12.0	1-1/4"

NOTES:
1. MINIMUM HYDRONIC RUN-OUT SHALL BE 3/4"
2. MINIMUM CONDENSATE SIZE SHALL BE 1"

GENERAL NOTES

1. ALL PIPING AND EQIUPMENT SHOWN ON THIS DRAWING IS DIAGRAMMATIC. LOCATE ALL DUCTWORK AND EQUIPMENT SO AS TO CLEAR ALL OBSTACLES.
2. ALL WORK TO BE PREFORMED IN ACCORDANCE WITH APPLICABLE FEDERAL, STATE, AND LOCAL CODES.
3. COORDINATE ALL HVAC INSTALLATIONS WITH ALL APPLICABLE TRADES.
4. VERIFY ALL DIMENSIONS AND CONDITIONS PRIOR TO THE START OF INSTALLATION OF ALL MECHANICAL AND PLUMBING EQUIPMENT. CONSTRUCTION DISCREPANCIES TO BE BROUGHT TO THE IMMEDIATE ATTENTION OF THE CONTRACTING OFFICER FOR A RESOLUTION.
5. COORDINATE ALL REQUIRED CONDUIT, PIPING AND CHASES FOR GOVERNMENT FURNISHED GOVERMENT INSTALLED EQUIPMENT WITH THE GOVERNMENT.

WALL RATING LEGEND

- NON-RATED WALL
- 1 HR RATED PARTITION
- SMOKE PARTITION

KEY PLAN

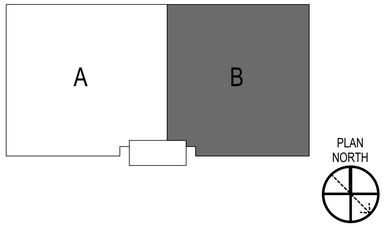

SYM	DESCRIPTION	DATE	APPR

NAVFAC

MARK D. DIMOFF MECHANICAL SEAL 041351 ENGINEER NORTH CAROLINA 06/25/20

HDR
440 S. CHURCH STREET, SUITE 1000
CHARLOTTE, NC 28202
TEL (704)338-6700

A/E INFO

APPROVED
FOR COMMANDER NAVFAC 7/10/2020

ACTIVITY
Approved by Emily Sylvester, Director of Installation Development Division

SATISFACTORY TO DATE 06/19/2020
DES MDD DRW BNR CHK CSW
PM/DM SGL/RMS
BRANCH MANAGER ALG
CHIEF ENG/ARCH EJA
FIRE PROTECTION

DEPARTMENT OF THE NAVY
NAVAL FACILITIES ENGINEERING COMMAND
NAVAL FACILITIES ENGINEERING COMMAND ~ MID-ATLANTIC
CAMP LEJEUNE - JACKSONVILLE, NC
ALG
MARSOC
JACKSONVILLE, NORTH CAROLINA
P1395 MARINE RAIDER HEADQUARTERS
MECHANICAL PIPING FLOOR PLAN - AREA "B"

SCALE: AS NOTED
EPROJECT NO.: 1603164
CONSTR. CONTR. NO.
NAVFAC DRAWING NO. 12794378
SHEET 159 OF 228
MP102

DRAWFORM REVISION: 17 APRIL 2018

C:\rvt\2016\10136813-M-CENTRAL_P-1395 MARINE HQ_mark.dimoff.rvt
6/25/2020 4:03:06 PM

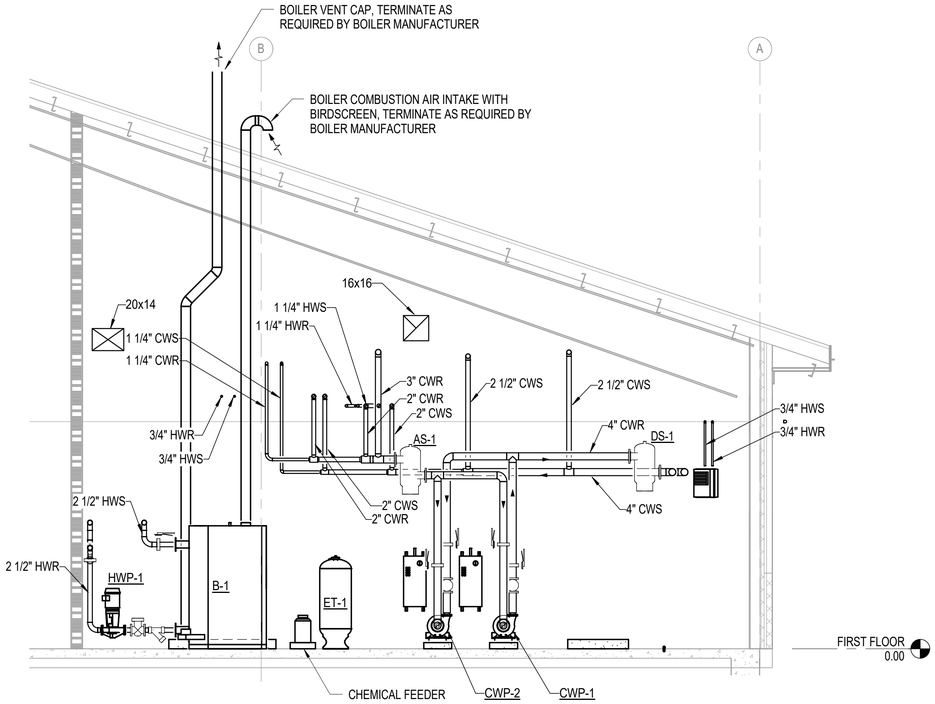

A1 MECHANICAL ROOM SECTION

SCALE: 1/4" = 1'-0" (M-401)

0 2' 4' 8'

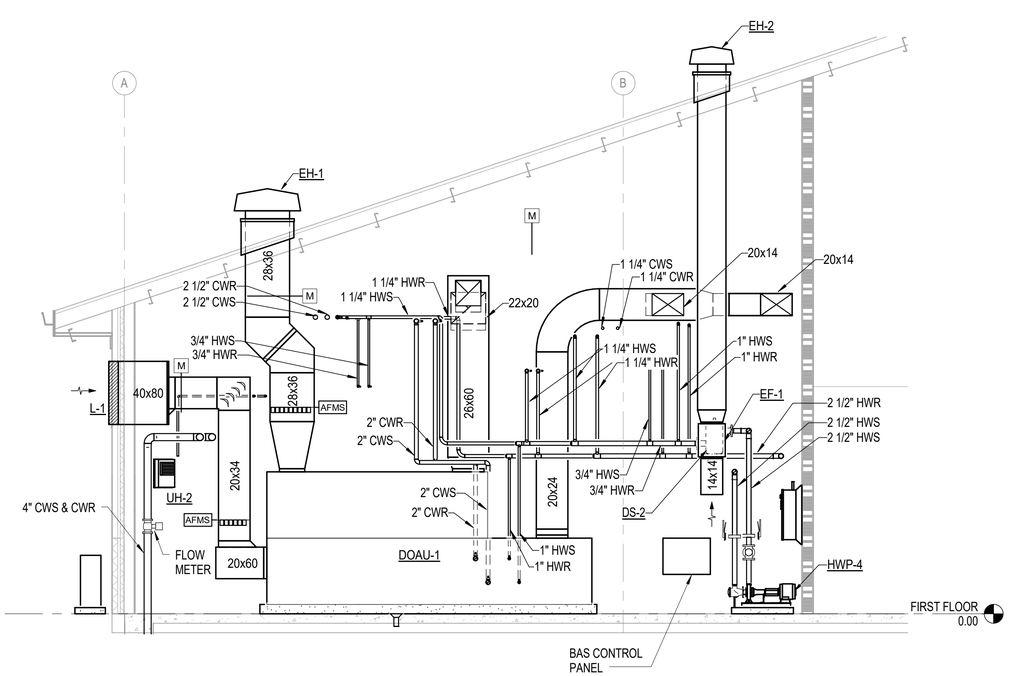

A3 MECHANICAL ROOM SECTION - ERU

SCALE: 1/4" = 1'-0" (M-401)

0 2' 4' 8'

SYM	DESCRIPTION	DATE	APPR

NAVFAC

MARK D. DIMOFF MECHANICAL SEAL 041351 ENGINEER NORTH CAROLINA 06/25/20 SEAL

HDR
440 S. CHURCH STREET, SUITE 1000
CHARLOTTE, NC 28202
TEL (704)338-6700
A/E INFO

APPROVED

FOR COMMANDER NAVFAC 7/10/2020

ACTIVITY

Approved by Emily Sylvester, Director of Installation Development Division

SATISFACTORY TO	DATE	
	06/19/2020	

DES	MDD	DRW	BNR	CHK	CSW

PM/DM	SGL/RMS
BRANCH MANAGER	ALG
CHIEF ENG/ARCH	EJA
FIRE PROTECTION	

DEPARTMENT OF THE NAVY
NAVAL FACILITIES ENGINEERING COMMAND – MID-ATLANTIC
ALG
NAVAL FACILITIES ENGINEERING COMMAND
CAMP LEJEUNE - JACKSONVILLE, NC
MARSOC
JACKSONVILLE, NORTH CAROLINA
P1395 MARINE RAIDER HEADQUARTERS
MECHANICAL SECTION

SCALE:	AS NOTED
EPROJECT NO.:	1603164
CONSTR. CONTR. NO.	
NAVFAC DRAWING NO.	12794379
SHEET	160 OF 228

M-301

DRAWFORM REVISION: 17 APRIL 2018

C:\ref\2016\01\36813-MCENTRAL_P-1395 MARINE HQ_mark.dimoff.rvt
6/25/2020 3:44:52 PM

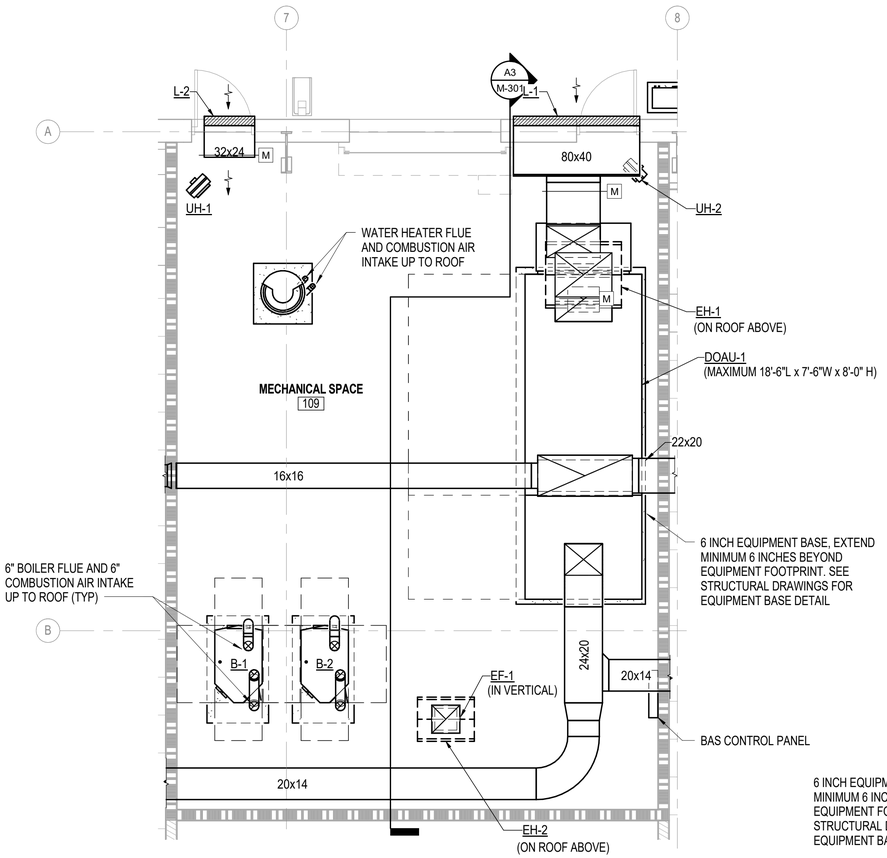

A1 ENLARGED MECHANICAL ROOM - ELEV 23.5'

SCALE: 1/4" = 1'-0" (MH101) 0 1' 2' 4'

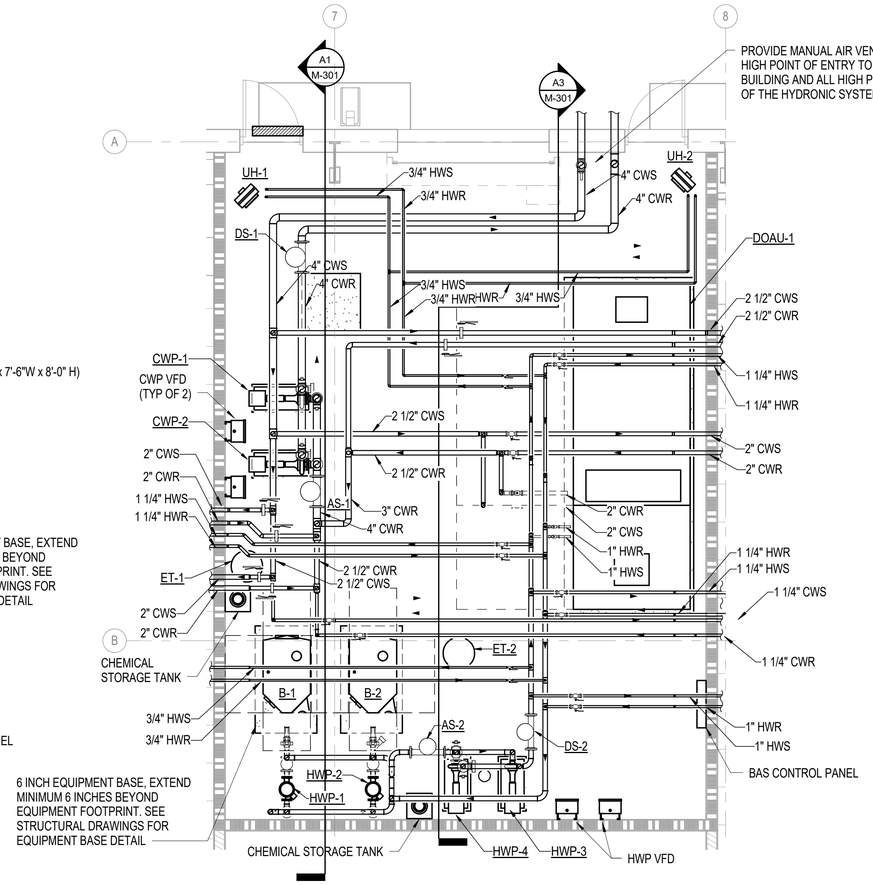

A3 ENLARGED MECHANICAL ROOM HYDRONIC - ELEV 23.5'

SCALE: 1/4" = 1'-0" (MP101) 0 2' 4' 8'

GENERAL NOTES

1. EQUIPMENT MAXIMUM WIDTH SHALL BE LESS THAN WIDTH OF MECHANICAL ROOM ROLL UP DOOR.

WALL RATING LEGEND

NON-RATED WALL

1 HR RATED PARTITION

SMOKE PARTITION

KEY PLAN

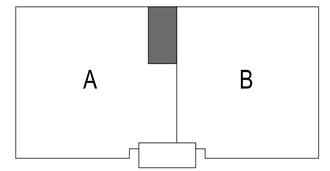

PLAN NORTH

SYM	DESCRIPTION	DATE	APPR

NAVFAC

MARK D. DIMOFF MECHANICAL SEAL 041351 ENGINEER NORTH CAROLINA 06/25/20 SEAL

HDR
440 S. CHURCH STREET, SUITE 1000
CHARLOTTE, NC 28202
TEL (704)338-6700
A/E INFO

APPROVED
FOR COMMANDER NAVFAC 7/10/2020
ACTIVITY
Approved by Emily Sylvester, Director of Installation Development Division
SATISFACTORY TO DATE 06/19/2020
DES MDD | DRW BNR | CHK CSW
PM/DM SGL/RMS
BRANCH MANAGER ALG
CHIEF ENG/ARCH EJA
FIRE PROTECTION

DEPARTMENT OF THE NAVY
NAVAL FACILITIES ENGINEERING COMMAND ~ MID-ATLANTIC
CAMP LEJEUNE ~ JACKSONVILLE, NC
ALG MARSOC
JACKSONVILLE, NORTH CAROLINA
P1395 MARINE RAIDER HEADQUARTERS
ENLARGED MECHANICAL PLANS

SCALE: AS NOTED
EPROJECT NO.: 1603164
CONSTR. CONTR. NO.
NAVFAC DRAWING NO. 12794380
SHEET 161 OF 228
M-401

DRAWFORM REVISION: 17 APRIL 2018

C:\rvt\2016\1013861\3-MCENTRAL_P-1395 MARINE HQ_mark.dimoff.rvt
6/25/2020 3:44:57 PM

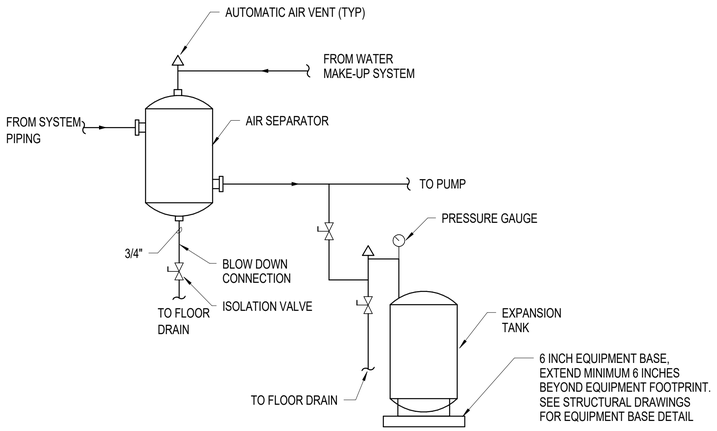

C1 AIR SEPARATOR AND EXPANSION TANK PIPING DETAIL

NTS

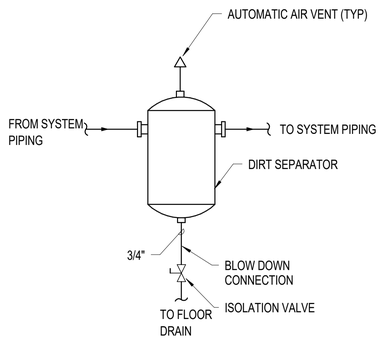

C2 DIRT SEPARATOR DETAIL

NTS

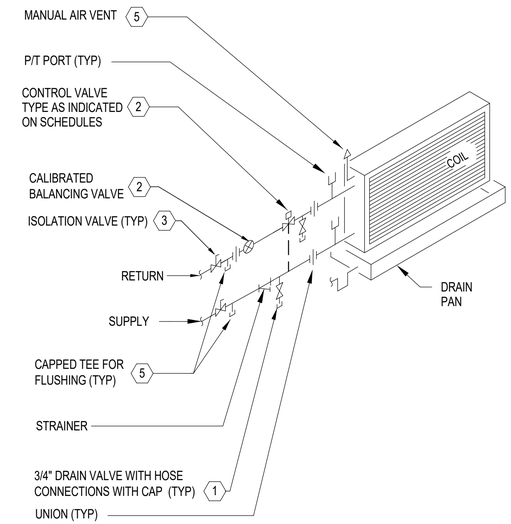

C3 HEATING WATER AND CHILLED WATER COIL PIPING DETAIL

NTS

NOTES

1. DRAIN TEE CONNECTIONS PROVIDE MEANS TO FLUSH COIL INDEPENDENT OF THE REMAINDER OF THE SYSTEM AND WITHOUT FLOWING THROUGH THE CONTROL VALVE.
2. THE CONTROL VALVES AND BALANCING SHALL BE INSTALLED IN CONFORMANCE WITH THE VALVE MFGR'S RECOMMENDED SPACING UPSTREAM AND DOWNSTREAM FROM CHANGES IN PIPE DIRECTION, AND/OR OTHER VALVES AND COMPONENTS IN THE PIPING.
3. ISOLATION VALVES ARE TO BE OF THE VALVE TYPE SPECIFIED AND TO BE INSTALLED TO ALLOW SERVICE AND REMOVAL OF ALL EQUIPMENT, ACCESSORIES, AND APPURTENANCES WITHOUT SYSTEM SHUTDOWN.
4. AIR VENT TO BE INSTALLED SO THE POINT OF THE VENT PIPING CONNECTION IS ABOVE THE HIGHEST POINT OF THE COIL AND ITS AFFILIATED PIPING. AIR VENT MAY BE PART OF THE COIL OR INSTALLED SEPARATELY.
5. TEE CONNECTIONS PROVIDE MEANS TO FLUSH BRANCH PIPING WITHOUT FLOWING THROUGH COIL AND CONTROL VALVE.

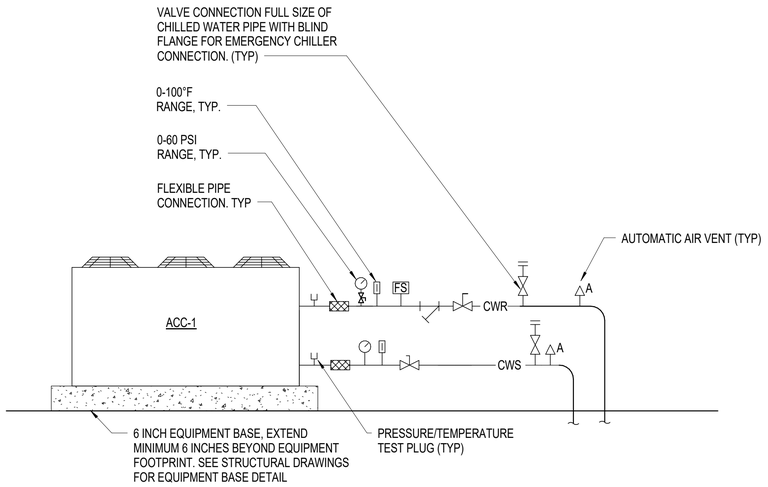

NOTE:
1. HEAT TRACE ALL EXTERIOR PIPING AND VALVES. REFER TO HEAT TRACE DETAIL FOR ADDITIONAL INFORMATION.

A1 AIR COOLED CHILLER DETAIL

NTS

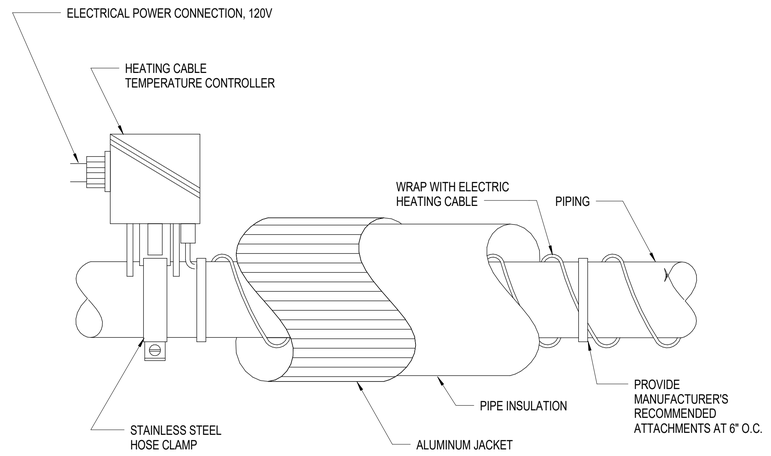

A3 HEAT TRACE DETAIL

NTS

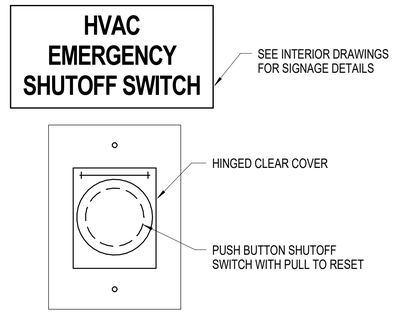

A4 TWO ACTION EMERGENCY SHUTOFF SWITCH

NTS

SYM	DESCRIPTION	DATE	APPR

NAVFAC

MARK D. DIMOFF MECHANICAL SEAL 041351 ENGINEER NORTH CAROLINA 06/25/20 SEAL

HDR
440 S. CHURCH STREET, SUITE 1000
CHARLOTTE, NC 28202
TEL (704)338-6700
A/E INFO

APPROVED
FOR COMMANDER NAVFAC 7/1/2020
ACTIVITY
Approved by Emily Sylvester, Director of Installation Development Division
SATISFACTORY TO DATE 06/19/2020

DES	MDD	DRW	BNR	CHK	CSW
PM/DM	SGL/RMS				
BRANCH MANAGER	ALG				
CHIEF ENGARCH	EJA				
FIRE PROTECTION					

DEPARTMENT OF THE NAVY
NAVAL FACILITIES ENGINEERING COMMAND
NAVAL FACILITIES ENGINEERING COMMAND ~ MID-ATLANTIC
CAMP LEJEUNE ~ JACKSONVILLE, NC
ALG MARSOC
JACKSONVILLE, NORTH CAROLINA
P1395 MARINE RAIDER HEADQUARTERS
MECHANICAL DETAILS

SCALE: AS NOTED
EPROJECT NO.: 1603164
CONSTR. CONTR. NO.
NAVFAC DRAWING NO.: 12794381
SHEET 162 OF 228

M-501

DRAWFORM REVISION: 17 APRIL 2018

C:\vk\2016\1013883\3.ACENTRAL_P-1395 MARINE HQ_mark.dimoff.rvt
6/25/2020 3:45:01 PM

DUCT CONSTRUCTION SCHEDULE					
SYSTEM	TYPE OF PRESSURE	SMACNA PRESSURE CLASS (IN WC)	SEAL CLASSIFICATION (PER SMACNA)	LEAK CLASSIFICATION (PER SMACNA)	
DEDICATED OUTDOOR AIR UNIT	POSITIVE	+2 MIN	A	ROUND	6
FAN COIL UNITS		+1 MIN		RECTANGULAR	6
DEDICATED OUTDOOR AIR UNIT	NEGATIVE	+2 MIN	A	ROUND	12
FAN COIL UNITS		+1 MIN		RECTANGULAR	12

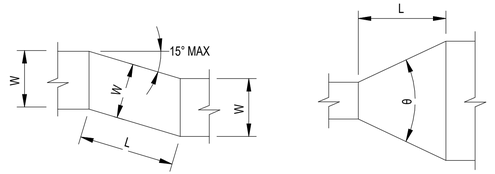

OFFSET TYPE 1
(ANGLED)

CONCENTRIC TRANSITION
θ MAX. 45 ° DIVERGING, 60° CONVERGING

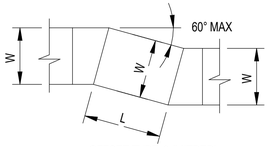

OFFSET TYPE 2 (MITRED)

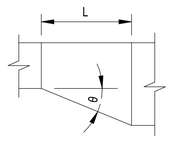

ECCENTRIC TRANSITION θ MAX. 30

DUCT OFFSET

TRANSITION FITTINGS

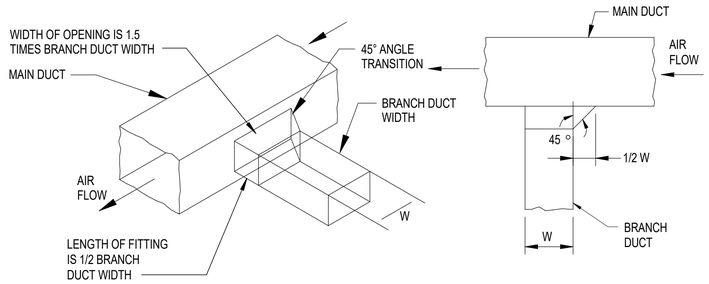

NOTE:
1. INSTALL MANUAL VOLUME DAMPERS IN ALL LOW PRESSURE SUPPLY, RETURN, AND EXHAUST DUCT BRANCHES.

BRANCH TAKE-OFF

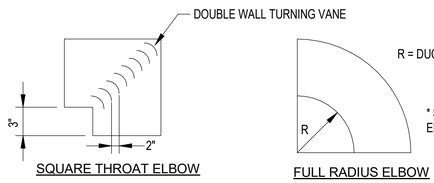

SQUARE THROAT ELBOW

FULL RADIUS ELBOW

A1 DUCT CONSTRUCTION DETAIL
NTS

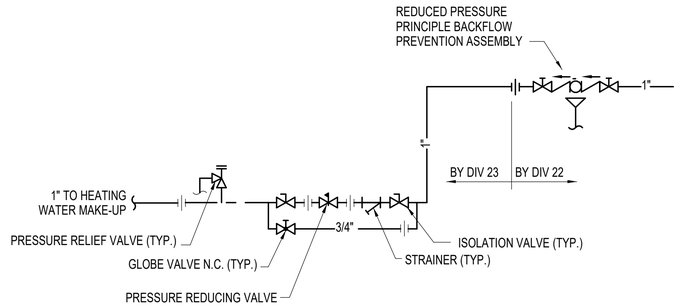

C3 MAKE-UP WATER PIPING DETAIL
NTS

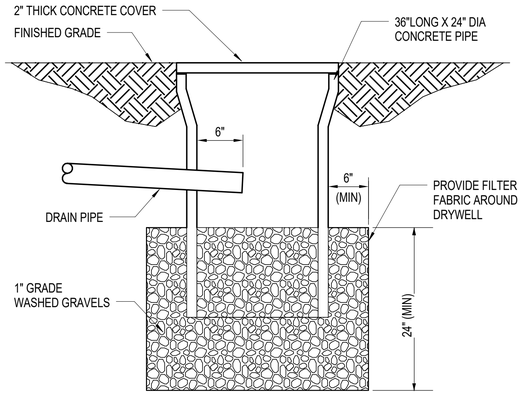

NOTES:
1. COORDINATE LOCATION OF DRYWELLS WITH CIVIL.

B3 CONDENSATE DRYWELL DETAIL
NTS

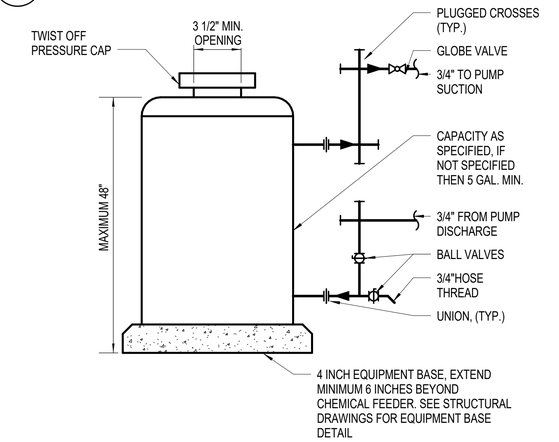

A3 CHEMICAL SHOT FEEDER
NTS

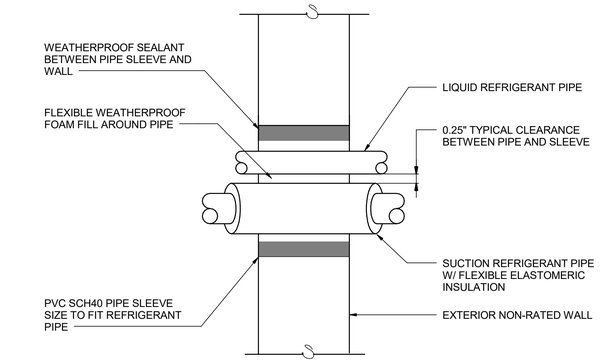

ABOVE GROUND WALL PENETRATION ONLY

PVC PIPE SLEEVE SIZE NOT TO EXCEED 6" SCH 40

C4 REFRIGERANT PIPE WALL PENETRATION DETAIL
NTS

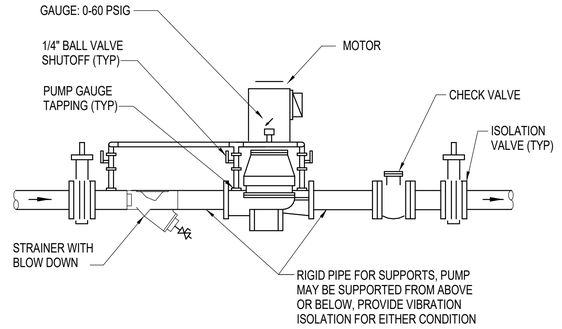

B4 INLINE PUMP DETAIL
NTS

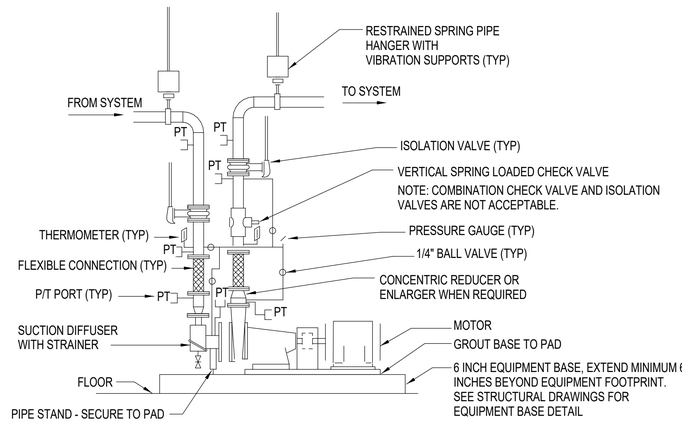

A4 BASE MOUNTED PUMP DETAIL
NTS

NO	SYM	DESCRIPTION	DATE	APPR

NAVFAC

NAVY OFFICE OF MECHANICAL
SEAL
041351
ENGINEER
NORTH CAROLINA
06/25/20
SEAL

HDR
440 S. CHURCH STREET, SUITE 1000
CHARLOTTE, NC 28202
TEL (704)338-6700
A/E INFO

APPROVED
FOR COMMANDER NAVFAC 7/10/2020
ACTIVITY
Approved by Emily Sylvester, Director of Installation Development Division
SATISFACTORY TO DATE 06/19/2020
DES MDD DRW BNR CHK CSW
PM/DM SGL/RMS
BRANCH MANAGER ALG
CHIEF ENG/ARCH EJA
FIRE PROTECTION

DEPARTMENT OF THE NAVY
NAVAL FACILITIES ENGINEERING COMMAND ~ MID-ATLANTIC
ALG
NAVAL FACILITIES ENGINEERING COMMAND
CAMP LEJEUNE - JACKSONVILLE, NC
MARSOC
JACKSONVILLE, NORTH CAROLINA
P1395 MARINE RAIDER HEADQUARTERS
MECHANICAL DETAILS

SCALE: AS NOTED
EPROJECT NO.: 1603164
CONSTR. CONTR. NO.
NAVFAC DRAWING NO.
12794382
SHEET 163 OF 228
M-502
DRAWFORM REVISION: 17 APRIL 2018

C:\ref\2018\10136813-MCENTRAL_P-1395 MARINE HQ_mark.dimoff.rvt
6/25/2020 3:45:05 PM

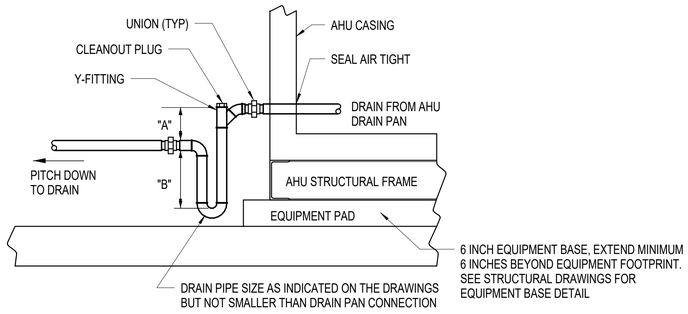

DRAW THRU SYSTEM
"A" = 1"+ FAN STATIC PRESSURE
"B" = HALF OF "A"

BLOW THRU SYSTEM
"A" = MIN"
"B" = "+ FAN STATIC PRESSURE

C1 TYPICAL CONDENSATE DRAIN
NTS

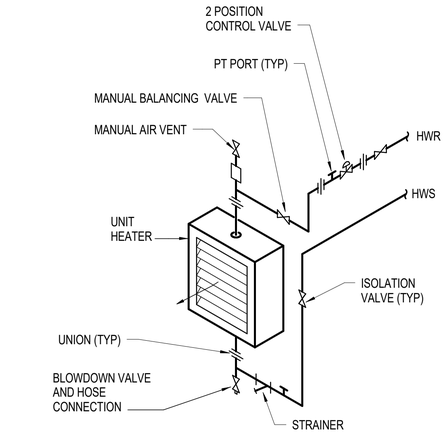

C3 UNIT HEATER DETAIL
NTS

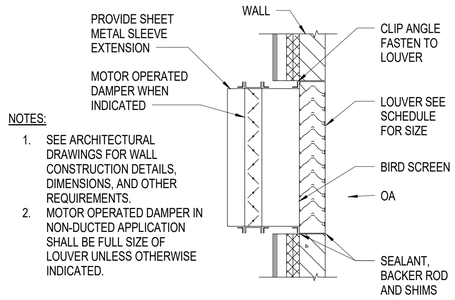

NOTES:
1. SEE ARCHITECTURAL DRAWINGS FOR WALL CONSTRUCTION DETAILS, DIMENSIONS, AND OTHER REQUIREMENTS.
2. MOTOR OPERATED DAMPER IN NON-DUCTED APPLICATION SHALL BE FULL SIZE OF LOUVER UNLESS OTHERWISE INDICATED.

C4 NON-DUCTED LOUVER IN WALL DETAIL
NTS

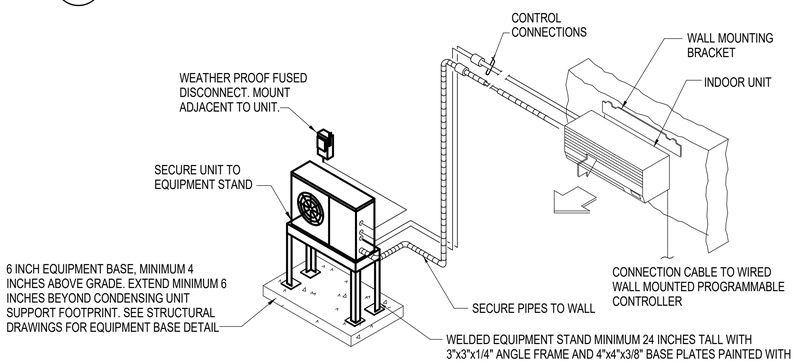

B1 DUCTLESS DX SPLIT SYSTEM DETAIL
NTS

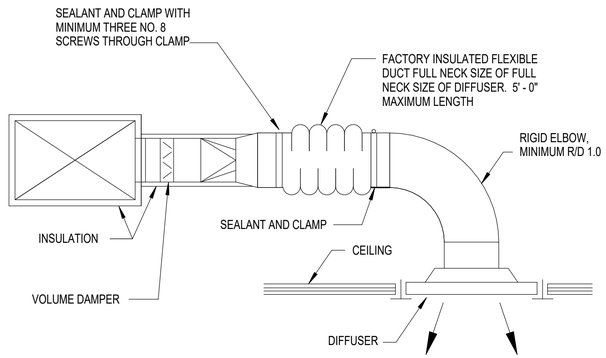

B3 DIFFUSER CONNECTION DETAIL
NTS

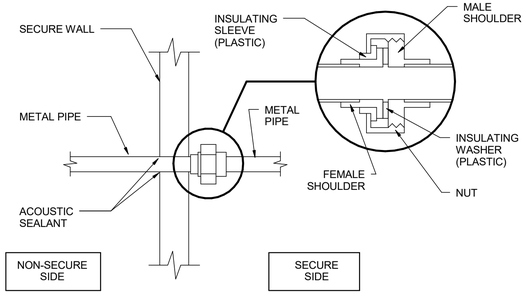

NOTES:
1. ALL PENETRATIONS THROUGH STC-RATED WALLS SHALL BE SEALED WITH AN ACOUSTICAL SEALANT TO MAINTAIN WALL STC RATING.
2. ALL PENETRATIONS THROUGH SECURED AREA BOUNDARY SHALL OCCUR AT ONE COMMON LOCATION. COORDINATE PENETRATION LOCATION WITH OTHER TRADES.

B4 DIELECTRIC PIPE DETIAL
NTS

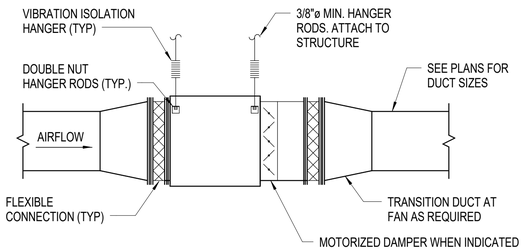

NOTES:
1. SEE DRAWINGS FOR SUCTION AND DISCHARGE DUCT SIZES.
2. SEE SCHEDULES AND SPECIFICATIONS FOR FAN REQUIREMENTS.
3. TRANSITIONS SHOWN ARE CONCENTRIC. TRANSITIONS MAY ALSO BE FLAT ON TOP OR FLAT ON BOTTOM. SEE DRAWINGS FOR TRANSITION TYPE.

A1 HORIZONTAL INLINE FAN DETAIL
NTS

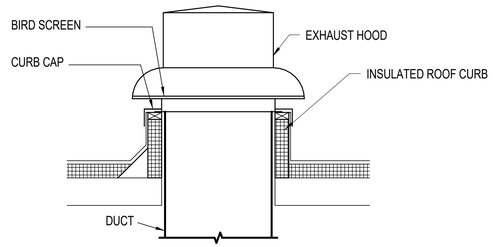

NOTES:
1. SECURE FAN TO ROOF CURB WITH STAINLESS STEEL SHEET METAL SCREWS AT 12" O.C.
2. PROVIDE FRAMING FOR OPENING AS REQUIRED. SEE STRUCTURAL DRAWINGS FOR REQUIREMENTS.
3. SEE ARCHITECTURAL DRAWINGS FOR ROOF CURB DETAIL.

A2 EXHAUST HOOD DETAIL
NTS

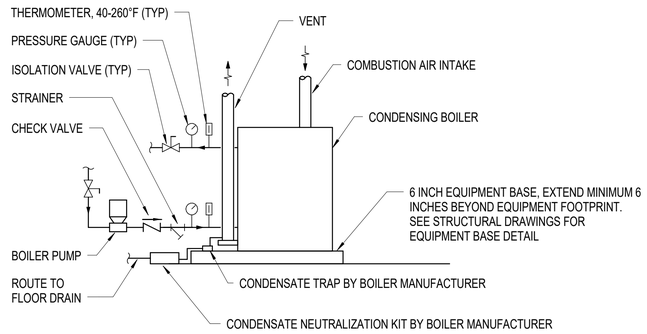

NOTES:
1. INSTALL PER MANUFACTURER'S INSTALLATION INSTRUCTIONS.

A4 CONDENSING BOILER DETAIL
NTS

SYM	DESCRIPTION	DATE	APPR

NAVFAC

MARK D. DIMOF — MECHANICAL — SEAL 041351 — ENGINEER — NORTH CAROLINA — 06/25/20

HDR
440 S. CHURCH STREET, SUITE 1000
CHARLOTTE, NC 28202
TEL (704)338-6700
A/E INFO

APPROVED
FOR COMMANDER NAVFAC 7/10/2020
ACTIVITY
Approved by Emily Sylvester, Director of Installation Development Division
SATISFACTORY TO DATE 06/19/2020
DES MDD | DRW BNR | CHK CSW
PM/QM SGL/RMS
BRANCH MANAGER ALG
CHIEF ENG/ARCH EJA
FIRE PROTECTION

DEPARTMENT OF THE NAVY
NAVAL FACILITIES ENGINEERING COMMAND – MID-ATLANTIC
CAMP LEJEUNE - JACKSONVILLE, NC
ALG MARSOC
JACKSONVILLE, NORTH CAROLINA
P1395 MARINE RAIDER HEADQUARTERS
MECHANICAL DETAILS

SCALE: AS NOTED
EPROJECT NO.: 1603164
CONSTR. CONTR. NO.
NAVFAC DRAWING NO. 12794383
SHEET 164 OF 228
M-503
DRAWFORM REVISION: 17 APRIL 2018

C:\wd2016\101396\13-MACENTRAL_P-1395 MARINE HQ_mark.dmoff.rvt
6/23/2020 3:45:09 PM

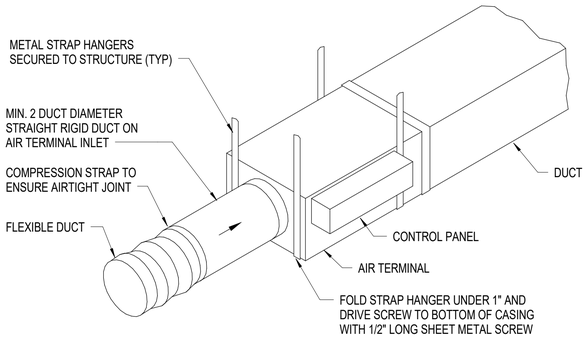

C1 SINGLE DUCT VAV/CAV TERMINAT UNIT

NTS

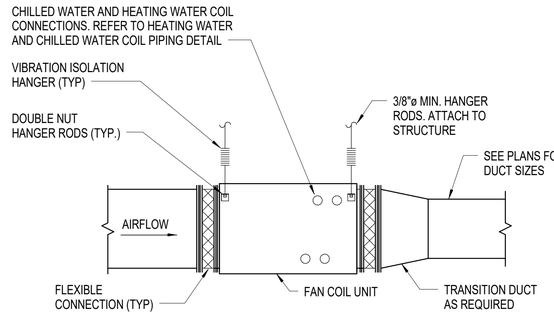

NOTES:

1. SEE DRAWINGS FOR SUPPLY DUCT SIZE.
2. RETURN DUCT WIDTH FULL SIZE OF UNIT CONNECT; RETURN DUCT HEIGHT MINIMUM FULL HEIGHT OF UNIT CONNECTION OR MINIMUM 2 INCHES GREATER THAN BRANCH CONNECTION, WHICHEVER IS GREATER.
3. INSTALL UNIT TO PROVIDE SERVICE CLEARANCE AS REQUIRED BY THE UNIT MANUFACTURER
4. TRANSITIONS SHOWN FOR SUPPLY DUCT ARE CONCENTRIC. TRANSITIONS MAY ALSO BE FLAT ON TOP OR FLAT ON BOTTOM. SEE DRAWINGS FOR TRANSITION TYPE.

C3 FAN COIL UNIT DETAIL

NTS

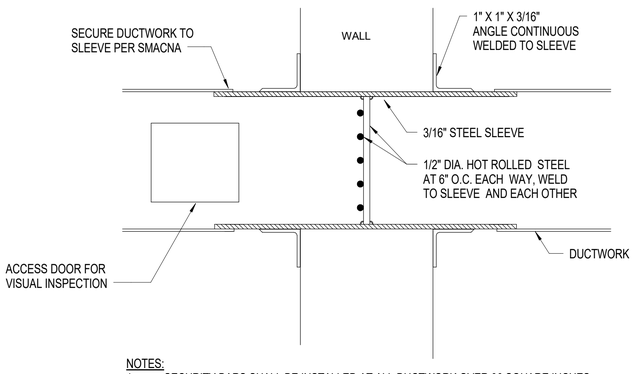

NOTES:

1. SECURITY BARS SHALL BE INSTALLED AT ALL DUCTWORK OVER 96 SQUARE INCHES PENETRATING A SEPARATION BETWEEN THE SECURE AND NON-SECURE AREA. TO INCLUDE, BUT NOT LIMITED TO, MECHANICAL ROOM WALLS AND VESTIBULE WALLS.
2. SEAL BOTH SIDES OF PENETRATIONS WITH AN ACOUSTICAL FOAM OR SEALANT FINISHED TO MATCH ADJACENT WALL, FLOOR, OR CEILING.
3. PROVIDE UNOBSTRUCTED ACCESS TO INSPECTION DOOR.

B1 DUCT SECURITY BAR DETAIL

NTS

SYM	DESCRIPTION	DATE	APPR

NAVFAC

MARK D. DIMOFF MECHANICAL SEAL 041351 ENGINEER NORTH CAROLINA 06/25/20 SEAL

HDR
440 S. CHURCH STREET, SUITE 1000
CHARLOTTE, NC 28202
TEL (704)338-6700

A/E INFO

APPROVED
FOR COMMANDER NAVFAC 7/10/2020

ACTIVITY
Approved by Emily Sylvester, Director of Installation Development Division

SATISFACTORY TO DATE 06/19/2020

DES MDD | DRW BNR | CHK CSW

PM/DM SGL/RMS

BRANCH MANAGER ALG

CHIEF ENG/ARCH EJA

FIRE PROTECTION

DEPARTMENT OF THE NAVY
NAVAL FACILITIES ENGINEERING COMMAND ~ MID-ATLANTIC
CAMP LEJEUNE - JACKSONVILLE, NC
ALG

MARSOC
JACKSONVILLE, NORTH CAROLINA
P1395 MARINE RAIDER HEADQUARTERS

MECHANICAL DETAILS

SCALE: AS NOTED

EPROJECT NO.: 1603164

CONSTR. CONTR. NO.

NAVFAC DRAWING NO. 12794384

SHEET 165 OF 228

M-504

DRAWFORM REVISION: 17 APRIL 2018

C:\vvt\2016\101368\13-M-CENTRAL_P-1395 MARINE HQ_mark.dimoff.rvt
6/25/2020 3:45:10 PM

FAN COIL UNIT SCHEDULE

MARK	SERVES	AIRFLOW (CFM)	ESP (IN WC)	COOLING COIL EAT (F) DB	COOLING COIL EAT (F) WB	COOLING COIL LAT (F) DB	COOLING COIL LAT (F) WB	COOLING COIL GPM	COOLING CAPACITY (BTU/HR) TOTAL MAX	COOLING CAPACITY (BTU/HR) TOTAL MIN	COOLING CAPACITY (BTU/HR) SENSIBLE MAX	COOLING CAPACITY (BTU/HR) SENSIBLE MIN	COOLING COIL EWT (F)	COOLING COIL LWT (F)	COOLING COIL WPD (FT)	COOLING COIL ROWS	COOLING COIL FPI	HEATING COIL EAT (F) DB	HEATING COIL LAT (F) DB	HEATING COIL GPM	HEATING COIL CAPACITY (BTU/HR)	HEATING COIL EWT (F)	HEATING COIL LWT (F)	HEATING COIL WPD (FT)	HEATING COIL ROWS	HEATING COIL FPI	FAN MOTOR HP	FAN QTY	VOLT/PH	NOTES
FCU-01	CO OFFICE	290	0.35	78	65	54.8	53.4	1.7	9,959	9,515	7,469	6,295	42	54	2.5	3	12	68	93.3	0.5	8,581	140	110	0.5	1	12	0 1/3	1	208/1	1,2,3,5,6,7,9
FCU-02	OFFICE	1015	0.5	78	65	54.1	53.3	6	35,153	32,840	26,853	21,695	42	54.2	0.9	4	12	68	92.7	1.8	28,697	140	109.2	0.9	1	12	0 1/3	2	208/1	1,2,3,5,6,7,8
FCU-03	CO OFFICE	200	0.35	78	65	54.3	53.5	1.2	6,769	5,885	5,259	3,985	42	54.2	1.1	3	12	68	98.4	0.5	7,211	140	113.1	0.4	1	12	0 1/3	1	208/1	1,2,3,4,5,6,7,9
FCU-04	OPEN OFFICE	435	0.5	78	65	55.6	53.8	2.5	14,208	13,085	14,208	9,680	42	53.8	1.9	3	10	68	92.2	1	11,962	140	117.3	0.3	1	10	0 1/3	1	208/1	1,2,3,5,6,7,9
FCU-05	OPEN OFFICE	810	0.5	78	65	54.8	53.3	4.5	27,977	24,010	20,787	20,245	42	55	2.5	3	12	68	93.7	1.5	23,793	140	109.7	0.6	1	12	0 1/3	2	208/1	1,2,3,5,6,7,9
FCU-06	OPEN OFFICE	810	0.5	78	65	54.8	53.3	4.5	27,977	24,010	20,787	20,245	42	55	2.5	3	12	68	93.7	1.5	23,793	140	109.7	0.6	1	12	0 1/3	2	208/1	1,2,3,5,6,7,9
FCU-07	OPEN OFFICE	810	0.5	78	65	54.8	53.3	4.5	27,977	24,010	20,787	20,245	42	55	2.5	3	12	68	93.7	1.5	23,793	140	109.7	0.6	1	12	0 1/3	2	208/1	1,2,3,5,6,7,8
FCU-08	OPEN OFFICE	480	0.5	78	65	54.4	52.8	3	17,264	16,265	12,507	12,440	42	53.8	1.9	4	10	68	89.5	1.6	20,863	140	115.3	0.6	1	10	0 1/3	2	208/1	1,2,3,5,6,7,9
FCU-09	BLUE OPS	450	0.5	78	65	54.2	53.0	2.5	15,559	14,255	11,629	10,495	42	54.9	2.3	4	10	68	90.3	0.8	11,271	140	112.9	1.0	1	10	0 1/3	1	208/1	1,2,3,5,6,7,9
FCU-10	BLUE OPS	1320	0.5	78	65	52.4	52.1	8	49,913	42,880	37,443	36,975	42	54.8	0.9	6	12	68	90.3	2	33,527	140	107.4	1.2	1	12	0 1/3	2	208/1	1,2,3,5,6,7,8
FCU-11	CONFERENCE	630	0.5	78	65	54	53.2	4	21,755	19,835	16,785	15,910	42	53.9	1.0	4	12	68	89.6	1	17,065	140	106.5	0.3	1	12	0 1/2	1	208/1	1,2,3,5,6,7,9
FCU-12	OFFICE	140	0.5	78	65	54.7	53.1	1	4,964	3,245	3,614	2,585	42	52.1	3.1	3	10	68	93.2	0.5	3,926	140	124.4	0.2	1	10	0 1/4	1	208/1	1,2,3,5,6,7,9
FCU-13	OFFICE	140	0.5	78	65	54.7	53.1	1	4,964	3,805	3,614	2,580	42	52.1	3.1	3	10	68	93.2	0.5	3,926	140	124.4	0.2	1	10	0 1/4	1	208/1	1,2,3,5,6,7,9
FCU-14	JTAC	820	0.5	78	65	54.4	53.2	5.5	28,877	24,615	21,597	20,595	42	53	1.5	4	10	68	89.2	1.5	20,443	140	114.2	0.5	1	10	0 1/3	2	208/1	1,2,3,5,6,7,8
FCU-15	PURPLE OPS	440	0.5	78	65	55.6	53.8	2.5	14,208	12,350	10,698	9,050	42	53.8	1.9	3	10	68	92.2	1	11,962	140	117.3	0.3	1	10	0 1/3	1	208/1	1,2,3,5,6,7,9
FCU-16	PURPLE OPS	840	0.5	78	65	55	53.5	5	28,247	24,970	21,177	20,970	42	53.8	1.9	4	10	68	89.5	1.6	20,863	140	115.3	0.6	1	10	0 1/3	2	208/1	1,2,3,5,6,7,8
FCU-17	PURPLE OPS	840	0.5	78	65	55	53.5	5	28,247	24,970	21,177	20,970	42	53.8	1.9	4	10	68	89.5	1.6	20,863	140	115.3	0.6	1	10	0 1/3	2	208/1	1,2,3,5,6,7,8
FCU-18	OFFICE	155	0.35	78	65	54.6	53.0	1	5,340	4,110	3,260	2,835	42	53.2	3.3	3	10	68	93.4	0.5	4,416	140	122.6	0.2	1	10	0 1/4	1	208/1	1,2,3,5,6,7,9
FCU-19	OFFICE	425	0.5	78	65	55.6	53.8	2.5	13,881	12,360	13,881	9,350	42	53.8	1.9	3	10	68	92.2	1	11,962	140	117.3	0.3	1	10	0 1/3	1	208/1	1,2,3,5,6,7,9
FCU-20	OFFICE	100	0.35	78	65	55.8	54.5	0.5	3,144	2,475	2,464	1,870	42	54	1.1	3	10	68	98.1	0.5	3,376	140	126.7	0.2	1	10	0 1/4	1	208/1	1,2,3,5,6,7,9
FCU-21	BREAKROOM	255	0.35	78	65	55.2	54.4	1.5	8,379	8,300	6,689	5,980	42	53.9	0.9	4	10	68	91	0.5	7,241	140	113	0.5	1	10	0 1/3	1	208/1	1,2,3,5,6,7,9
FCU-22	CONFERENCE	630	0.5	78	65	54	53.2	4	21,755	20,090	16,785	16,305	42	53.9	1.0	4	12	68	89.6	1	17,065	140	106.5	0.3	1	12	0 1/2	1	208/1	1,2,3,5,6,7,9
FCU-23	CORRIDOR	480	0.5	78	65	54.4	52.8	3	17,264	12,920	12,507	8,160	42	53.8	1.9	4	10	68	89.5	1.6	20,863	140	115.3	0.6	1	10	0 1/3	2	208/1	1,2,3,5,6,7,9
FCU-24	GREEN OPS	450	0.5	78	65	54.2	53.0	2.5	15,559	14,655	11,629	10,575	42	54.9	2.3	4	10	68	90.3	0.8	11,271	140	112.9	1.0	1	10	0 1/3	1	208/1	1,2,3,5,6,7,9
FCU-25	GREEN OPS	1110	0.5	78	65	52.9	51.7	8	43,057	36,235	30,897	30,150	42	53.1	3.1	4	12	68	90.2	1.8	28,243	140	109.7	0.8	1	12	0 1/3	2	208/1	1,2,3,5,6,7,8
FCU-26	GREEN OPS	1110	0.5	78	65	52.9	51.7	8	43,057	36,235	30,897	30,150	42	53.1	3.1	4	12	68	90.2	1.8	28,243	140	109.7	0.8	1	12	0 1/3	2	208/1	1,2,3,5,6,7,8
FCU-27	OFFICE	200	0.35	78	65	54.3	53.5	1.2	6,769	5,365	5,259	3,430	42	54.2	1.1	3	12	68	98.4	0.5	7,211	140	113.1	0.4	1	12	0 1/3	1	208/1	1,2,3,4,5,6,7,9
FCU-28	OFFICE	870	0.5	78	65	55	53.5	5	29,256	25,450	21,933	16,905	42	53.8	1.9	4	10	68	89.5	1.6	20,863	140	115.3	0.6	1	10	0 1/3	2	208/1	1,2,3,5,6,7,9
FCU-29	OFFICE	100	0.35	78	65	55.8	54.5	0.5	4,964	2,690	2,464	2,075	42	54	1.1	3	10	68	98.1	0.5	3,376	140	126.7	0.2	1	10	0 1/4	1	208/1	1,2,3,5,6,7,9
FCU-30	CO OFFICE	200	0.35	78	65	54.3	53.5	1.2	6,769	5,920	5,259	4,000	42	54.2	1.1	3	12	68	98.4	0.5	7,211	140	113.1	0.4	1	12	0 1/3	1	208/1	1,2,3,4,5,6,7,9
FCU-31	CORRIDOR	290	0.35	78	65	54.8	53.4	1.7	9,959	8,815	7,469	6,845	42	54	2.5	3	12	68	93.3	0.5	8,581	140	110	0.5	1	12	0 1/3	1	208/1	1,2,3,5,6,7,9
FCU-32	CONFERENCE	630	0.5	78	65	54	53.2	4	21,755	18,310	16,785	15,115	42	53.9	1.0	4	12	68	89.6	1	17,065	140	106.5	0.3	1	12	0 1/2	1	208/1	1,2,3,5,6,7,9
FCU-33	BREAKROOM	380	0.5	78	65	54.4	52.7	2.5	13,609	12,215	9,789	8,475	42	53.3	4.8	3	10	68	92.5	0.8	10,591	140	114.6	1.0	1	10	0 1/3	1	208/1	1,2,3,5,6,7,9
FCU-34	CONFERENCE	630	0.5	78	65	54	53.2	4	21,755	18,950	16,785	15,330	42	53.9	1.0	4	12	68	89.6	1	17,065	140	106.5	0.3	1	12	0 1/2	1	208/1	1,2,3,5,6,7,9
FCU-35	BATHROOM	360	0.5	78	65	55.1	54.2	2	11,579	9,240	7,469	5,461	42	54	2.5	3	12	68	93.3	0.5	8,581	140	110	0.5	1	12	0 1/3	1	208/1	1,2,3,5,6,7,9
FCU-36	BATHROOM	290	0.35	78	65	54.8	53.4	1.7	9,959	8,010	9,789	5,015	42	53.3	4.8	3	10	68	92.5	0.8	10,591	140	114.6	1.0	1	10	0 1/3	1	208/1	1,2,3,5,6,7,9
FCU-37	SECURITY	100	0.35	78	65	55.8	54.5	0.5	3,144	2,035	2,464	1,620	42	54	1.1	3	10	68	98.1	0.5	3,376	140	126.7	0.2	1	10	0 1/4	1	208/1	1,2,3,5,6,7,9
FCU-38	VESTIBULE	440	0.5	78	65	55.6	53.8	2.5	14,208	10,970	10,698	10,070	42	53.8	1.9	3	10	68	92.2	1	11,962	140	117.3	0.3	1	10	0 1/3	1	208/1	1,2,3,5,6,7,9
FCU-39	JTAC	1472	0	78	65	55	53.3	9	50,918	-	37,508	-	42	53.7	3.7	4	12	-	-	-	-	-	-	-	-	-	0 1/3	2	208/1	1,2,3,4,5,6,7,8
FCU-40	JTAC	1472	0	78	65	55	53.3	9	50,918	-	37,508	-	42	53.7	3.7	4	12	-	-	-	-	-	-	-	-	-	0 1/3	2	208/1	1,2,3,4,5,6,7,8
FCU-41	JTAC	1472	0	78	65	55	53.3	9	50,918	-	37,508	-	42	53.7	3.7	4	12	-	-	-	-	-	-	-	-	-	0 1/3	2	208/1	1,2,3,4,5,6,7,8
FCU-42	JTAC	1472	0	78	65	55	53.3	9	50,918	-	37,508	-	42	53.7	3.7	4	12	-	-	-	-	-	-	-	-	-	0 1/3	2	208/1	1,2,3,4,5,6,7,8
FCU-43	SECURED OFFICE	140	0.5	78	65	54.7	53.1	1	4,964	4,285	3,614	3,445	42	52.1	3.1	3	10	68	93.2	0.5	3,926	140	124.4	0.2	1	10	0 1/4	1	208/1	1,2,3,5,6,7,9
FCU-44	SECURED OFFICE	100	0.35	78	65	55.8	54.5	0.5	3,144	1,925	2,464	1,520	42	54	1.1	3	10	68	98.1	0.5	3,376	140	126.7	0.2	1	10	0 1/4	1	208/1	1,2,3,5,6,7,9

NOTES:
1. INTEGRAL DISCONNECT SWITCH
2. 1-INCH MERV 8 DISPOSABLE FILTER
3. ELECTRONICALLY COMMUTATED MOTOR WITH SPEED CONTROLLER
4. CONDENSATE PUMP
5. ELASTOMERIC CLOSED CELL FOAM INSULATION
6. FIELD REVERSIBLE WATER COILS AND DRAIN PAN
7. CONDENSATE OVERFLOW SWITCH HARDWIRED TO SHUTDOWN SUPPLY FAN.
8. 3-WAY 2-POSITION CONTROL VALVE
9. 2-WAY 2-POSTION CONTROL VALVE

AIR COOLED CHILLER

MARK	EVAPORATOR GPM	EVAPORATOR MIN GPM	EVAPORATOR CAPACITY (TONS)	EVAPORATOR EWT (F)	EVAPORATOR LWT (F)	EVAPORATOR WPD (FT)	CONDENSER EAT (F)	CONDENSER NO. OF FANS	EFFICIENCY AT AHRI 550/590 EER	EFFICIENCY AT AHRI 550/590 IPLV	MAXIMUM SOUND POWER AT UNIT 63 HZ	125 HZ	250 HZ	500 HZ	1 KHZ	2 KHZ	4 KHZ	8 KHZ	ELECTRICAL DATA MCA	ELECTRICAL DATA MOCP	ELECTRICAL DATA VOLT/PH	NOTES
ACC-1	170	84	85.0	54.0	42.0	8.3	91	6	10.4	17.5	94	95	92	91	89	83	81	81	168	200	460/3	1,2,3,4,5,6

NOTES:
1. FACTORY WIRE WITH SINGLE POINT CONNECTION.
2. STARTER TYPE- VFD
3. R410A REFRIGERANT
4. INTEGRAL DISCONNECT SWITCH
5. HEAT TRACE ALL EXPOSED PIPING, VALVES, AND COMPONENTS SUBJECT TO FREEZING
6. EPOXY COATED COILS AND FRAMES WITH 6000 HOUR SALT SPRAY RATING PER ASTM B117-90

SYM | DESCRIPTION | DATE | APPR

NAVFAC

MARK P. DIMOFF
MECHANICAL
SEAL
041351
ENGINEER
NORTH CAROLINA
06/25/20
SEAL

HDR
440 S. CHURCH STREET, SUITE 1000
CHARLOTTE, NC 28202
TEL (704)338-6700
A/E INFO

APPROVED
James E. Donahue, R.A.
FOR COMMANDER NAVFAC 7/10/2020

ACTIVITY
Approved by Emily Sylvester, Director of Installation Development Division
SATISFACTORY TO DATE 06/19/2020

DES MDD | DRW BNR | CHK CSW
PM/DM SGL/RMS
BRANCH MANAGER ALG
CHIEF ENG/ARCH EJA
FIRE PROTECTION

DEPARTMENT OF THE NAVY
NAVAL FACILITIES ENGINEERING COMMAND
NAVAL FACILITIES ENGINEERING COMMAND ~ MID-ATLANTIC
CAMP LEJEUNE - JACKSONVILLE, NC
ALG
MARSOC
JACKSONVILLE, NORTH CAROLINA
P1395 MARINE RAIDER HEADQUARTERS
MECHANICAL SCHEDULES

SCALE: AS NOTED
EPROJECT NO.: 1603164
CONSTR. CONTR. NO.
NAVFAC DRAWING NO. 12794385
SHEET 166 OF 228
M-601

DRAWFORM REVISION: 17 APRIL 2018

C:\rvt\2016\10136813-M-CENTRAL_P-1395 MARINE HQ_mark.dimoff.rvt
6/25/2020 3:45:14 PM

DEDICATED OUTDOOR AIR UNIT WITH ENERGY RECOVERY WHEEL

MARK	OPERATION	OUTSIDE AIR FLOW (CFM)	EXHAUST AIR FLOW (CFM)	SUPPLY FAN		EXHAUST FAN		ENTHALPY WHEEL (SUMMER)			COOLING COIL								HEATING COIL							VOLT/PH	NOTES
				ESP (IN WC)	BHP / HP	ESP (IN WC)	BHP / HP	SUPPLY		EXHAUST																	
								EAT DB / WB (F)	LAT DB / WB (F)	EAT DB / WB (F)	EAT DB / WB (F)	LAT DB / WB (F)	TOTAL (MBH)	SENSIBLE (MBH)	EWT (F)	LWT (F)	GPM	WPD (FT)	EAT DB (F)	LAT DB (F)	TOTAL (MBH)	EWT (F)	LWT (F)	GPM	WPD (FT)		
DOAU-1	SUMMER	5,150	4,535	1.50	3.48 / 5	1.00	2.17 / 5	84.0 / 78.7	79.8 / 70.3	78.0 / 65.0	79.8 / 70.3	54.8 / 54.6	259.7	141.5	42.0	54.2	42.6	3.6	-	-	-	-	-	-	-	460/3	1,2,3,4,5,6,7
	WINTER							26.8 / -	56.2 / -	68.0 / -	-	-	-	-	-	-	-	-	56.2	71.1	83.8	140.0	107.7	5.2	0.6		

NOTES:
1. INTEGRAL OR FIELD INSTALLED DISCONNECT SWITCH
2. ENERGY RECOVERY WHEEL WITH VFD FOR FROST CONTROL
3. MERV 8 AND MERV 13 INTAKE FILTERS.
4. MERV 8 EXHAUST FILTERS
5. VFD SUPPLY FAN AND EXHAUST FAN MOTOR
6. SEGMENTED ENTHALPY WHEEL
7. 2-WAY MODULATING CONTROL VALVE

DUCTLESS SPLIT SYSTEM

MARK NO.	AREA SERVED	INDOOR UNIT										NOTES
		CFM (HIGH SPEED)	WEIGHT (LBS)	LAT DB / WB (F)	SEER	CAPACITY (MBH)			ELECTRICAL			WEIGHT (LBS)	
						COOLING		HEATING	MCA	MOCP	VOLT/PH		
						TOTAL	SENSIBLE						
AC-1/CU-1	ELECTRICAL ROOM	715	27	57.8 / 57.1	18	17.3	15.6	-	18.3	20	208 / 1	159	1,2,3,4,5
AC-2/CU-2	TELECOM	770	38	52.5 / 52.5	17.9	21.9	21.2	-	19.5	20	208 / 1	179	1,2,3,4,5
AC-3/HP-3	FIRE ALARM	425	27	56.4 / 56.0	15.2	11.7	9.9	14	11	20	208 / 1	159	1,2,3,4,5
AC-4/CU-4	TELECOM	770	38	52.5 / 52.5	17.9	21.9	21.2	-	19.5	20	208 / 1	179	1,2,3,4,5

NOTES:
1. COOLING CAPACITY BASED ON 90° F OUTDOOR AIR TEMPERATURE
2. R-410A REFRIGERANT
3. WALL MOUNTED WIRED THERMOSTAT/CONTROLLER
4. INDOOR UNIT POWER BY OUTDOOR UNIT
5. FIELD INSTALLED NEMA 4X DISCONNECT SWITCH

HOOD SCHEDULE

MARK	LOCATION	SERVICE	AIRFLOW (CFM)	THROAT AREA (SQ. FT.)	THROAT VEL. (FPM)	MAX PRESS. DROP (IN.WG.)	THROAT SIZE (IN.)		NOTES
							WIDTH	LENGTH	
EH-1	ROOF	EXHAUST	4,500	7.00	643	0.06	28	36	1,2,3
EH-2	ROOF	EXHAUST	1,000	2.25	444	0.03	18	18	1,2,3

NOTES:
1. PROVIDE REMOVABLE STAINLESS STEEL BIRDSCREEN
2. ALUMINUM CONSTRUCTION
3. 12 INCH ROOF CURB

EXPANSION TANK SCHEDULE

MARK	SYSTEM	TANK (GAL)	ACCEPTANCE VOLUME (GAL)	TYPE	AIR CHARGE (PSI)	NOTES
ET-1	CHILLED WATER	8.0	2.4	DIAPHRAGM	14	1
ET-2	HEATING WATER	21.7	11.3	DIAPHRAGM	14	1

NOTES:
1. ASME RATED WITH DESIGN PRESSURE OF 125 PSI AND DESIGNED TEMPERATURE OF 240F

HYDRONIC UNIT HEATER SCHEDULE

MARK	TYPE	LOCATION	CAPACITY (BTU/HR)		HEATING COIL							ELECTRICAL DATA			NOTES
			MAX	MIN	AIRFLOW (CFM)	EAT (F)	LAT (F)	GPM	EWT (F)	LWT (F)	WPD (FT)	MOTOR (WATT)	MCA	VOLT/PH	
UH-1	HORIZONTAL	MECHANICAL ROOM	8,965	6,250	420	60	79.8	0.6	140	110	0.9	16	1.0	115/60	1,2,3,4
UH-2	HORIZONTAL	MECHANICAL ROOM	8,965	6,250	420	60	79.8	0.6	140	110	0.9	16	1.0	115/60	1,2,3,4

NOTES:
1. MANUFACTURER SUPPLIED MOUNTING BRACKET AND DISCONNECT SWITCH.
2. BAS CONTROLLED
3. SUSPEND 8'0" ABOVE FINISHED FLOOR.
4. INTEGRAL DISCONNECT

LOUVER SCHEDULE

MARK	SERVICE	LOCATION	CFM	VELOCITY (FT/MIN)	PRESS. LOSS (IN WC)	FREE AREA (SF)	WIDTH (IN)	HEIGHT (IN)	NOTES
L-1	INTAKE	MECHANICAL SPACE	5,235	443	0.03	11.8	80	40	1,2
L-2	INTAKE	MECHANICAL SPACE	1,000	445	0.03	2.3	32	24	1,2

NOTES:
1. PROVIDE REMOVEABLE STAINLESS STEEL WIRE MESH BIRD SCREEN.
2. SEE ARCHITECTURAL SHEETS FOR EXACT LOCATION AND MOUNTING HEIGHTS.

DIRT SEPARATOR SCHEDULE

MARK	SYSTEM	GPM	WPD (FT)	NOMINAL PIPE DIA (IN)	NOTES
DS-1	CHILLED WATER	207	0.8	4	1,2
DS-2	HEATING WATER	56	0.2	3	1,2

NOTES:
1. AUTOMATIC AIR VENT WITH ISOLATION VALVE TO ALLOW FOR AIR VENT REPLACEMENT.
2. REMOVABLE BOTTOM.

AIR SEPARATOR SCHEDULE

MARK	SYSTEM	GPM	WPD (FT)	NOMINAL PIPE DIA (IN)	NOTES
AS-1	CHILLED WATER	207	0.8	4	1
AS-2	HEATING WATER	56	0.2	3	1

NOTES:
1. AUTOMATIC AIR VENT WITH ISOLATION VALVE TO ALLOW FOR AIR VENT REPLACEMENT

APPR | DATE | SYM | DESCRIPTION

NAVFAC

MARK D. DIMOFF MECHANICAL SEAL 041351 ENGINEER NORTH CAROLINA 06/25/20 SEAL

HDR
440 S. CHURCH STREET, SUITE 1000
CHARLOTTE, NC 28202
TEL (704)338-6700
A/E INFO

APPROVED
FOR COMMANDER NAVFAC 7/01/2020
ACTIVITY
Approved by Emily Sylvester, Director of Installation Development Division
SATISFACTORY TO DATE 06/19/2020
DES MDD | DRW BNR | CHK CSW
PM/DM SGL/RMS
BRANCH MANAGER ALG
CHIEF ENG/ARCH EJA
FIRE PROTECTION

DEPARTMENT OF THE NAVY
NAVAL FACILITIES ENGINEERING COMMAND
NAVAL FACILITIES ENGINEERING COMMAND ~ MID-ATLANTIC
CAMP LEJEUNE - JACKSONVILLE, NC
ALG
MARSOC
JACKSONVILLE, NORTH CAROLINA
P1395 MARINE RAIDER HEADQUARTERS
MECHANICAL SCHEDULES

SCALE: AS NOTED
EPROJECT NO.: 1603164
CONSTR. CONTR. NO.
NAVFAC DRAWING NO.
12794386
SHEET 167 OF 228
M-602
DRAWFORM REVISION: 17 APRIL 2018

C:\HDR\2018\101136813-MCENTRAL_P-1395 MARINE HQ_mark.dimoff.rvt
6/25/2020 3:45:18 PM

DIFFUSER, REGISTER, AND GRILLE SCHEDULE

MARK	DESCRIPTION	FACE TYPE	MAX NC	MATERIAL	FINISH	FRAME TYPE	FACE SIZE	NECK SIZE	NOTES
SD1	PERFORATED FACE	ADJUSTABLE MODULAR CORE	25	ALUMINUM	WHITE	LAY-IN	24x24	SEE PLANS	1,2
SD2	PERFORATED FACE	PERFORATED	25	ALUMINUM	WHITE	LAY-IN	16x16	SEE PLANS	1,2
LD1	LINEAR DIFFUSER	48 INCH - (1) 2 INCH SLOTS	25	ALUMINUM	WHITE	SURFACE	-	SEE PLANS	3,4
LD2	LINEAR DIFFUSER	24 INCH - (1) 2 INCH SLOTS	25	ALUMINUM	WHITE	SURFACE	-	SEE PLANS	3,4
RG1	PERFORATED FACE	PERFORATED	25	ALUMINUM	WHITE	LAY-IN	24x48	SEE PLANS	1,2
RG2	PERFORATED FACE	PERFORATED	25	ALUMINUM	WHITE	LAY-IN	24X24	SEE PLANS	1,2
RG3	PERFORATED FACE	PERFORATED	25	ALUMINUM	WHITE	LAY-IN	16x16	SEE PLANS	1,2
RD1	LINEAR DIFFUSER	48 INCH - (1) 2 INCH SLOTS	25	ALUMINUM	WHITE	SURFACE	-	SEE PLANS	3,4
EG1	PERFORATED FACE	PERFORATED	25	ALUMINUM	WHITE	LAY-IN	24x24	SEE PLANS	1,2
EG2	PERFORATED FACE	PERFORATED	25	ALUMINUM	WHITE	LAY-IN	12x12	SEE PLANS	1,2
EG3	PERFORATED FACE	PERFORATED	25	ALUMINUM	WHITE	LAY-IN	16x16	SEE PLANS	1,2
ED1	LINEAR DIFFUSER	48 INCH - (1) 2 INCH SLOTS	25	ALUMINUM	WHITE	SURFACE	-	SEE PLANS	3,4
TG1	PERFORATED FACE	PERFORATED	25	ALUMINUM	WHITE	LAY-IN	24x24	SEE PLANS	1

NOTES:
1. PROVIDE BORDERS/FRAMES SUITABLE FOR SECURING TO CONSTRUCTION MATERIAL.
2. PROVIDE PLASTER FRAME FOR DIFFUSERS INSTALLED IN DRY WALL CEILING.
3. FIBER FREE FOAM INSULATED PLENUM
4. CABLE OPERATED DAMPER

VAV TERMINAL BOXES

MARK	SERVICE	PRIMARY AIRFLOW CFM		AIR INLET DIAMETER (IN)	MAX DISCHARGE NC	PRESSURE DROP	NOTES
		MIN	MAX				
VAV-1	SUPPLY	145	480	7	30	0.06	1
VAV-2	SUPPLY	145	480	7	30	0.06	1
VAV-3	SUPPLY	105	350	5	30	0.01	1
VAV-4	SUPPLY	70	220	5	30	0.01	1
VAV-5	SUPPLY	125	410	7	30	0.04	1
VAV-6	SUPPLY	55	165	4	30	0.01	1
VAV-7	SUPPLY	45	135	4	30	0.01	1
VAV-8	SUPPLY	40	125	4	30	0.01	1
VAV-9	SUPPLY	220	720	8	30	0.01	1
VAV-10	SUPPLY	45	135	4	30	0.01	1
VAV-11	EXHAUST	515	1,695	14	30	0.01	1
VAV-12	EXHAUST	470	1,555	14	30	0.01	1

NOTES:
1. PROVIDE 24V ACTUATOR AND CONTROL BOARD POWERED FROM ENERGY RECOVERY CONTROL PANEL OR BAS CONTROL PANEL.

CAV TERMINAL BOXES

MARK	SERVICE	PRIMARY AIRFLOW CFM	AIR INLET DIAMETER (IN)	MAX. DISCHARGE NC	PRESSURE DROP	NOTES
CAV-1	SUPPLY	235	5	30	0.01	1
CAV-2	SUPPLY	120	5	30	0.01	1
CAV-3	SUPPLY	405	6	30	0.13	1
CAV-4	SUPPLY	1,170	10	30	0.01	1
CAV-5	EXHAUST	1,285	14	30	0.01	1

NOTES:
1. PROVIDE 24V ACTUATOR AND CONTROL BOARD POWERED FROM ENERGY RECOVERY CONTROL PANEL OR BAS CONTROL PANEL.

ELECTRIC HEAT TAPE

UNIT NO.	SERVICE	PIPE SIZE (IN)	PIPE TEMP (°F)	MIN AMBIENT TEMP (°F)	APPROX. CABLE (FT)	CABLE RATING (W/FT)	TOTAL WATTS	ELECTRICAL DATA		REMARKS
								MCA	VOLTS/PH	
ACC-HT-01	DOMESTIC WATER	4	42	20	60	2.4	400	4.3	120/1	1,2,3,4

GENERAL NOTES:
1. SINGLE POINT HEAT-TRACING CONTROLLER.
2. PROVIDE ALL JUNCTION BOXES, SELF REGULATING TEMP. CONTROLS, CONNECTIONS, SENSORS, TEES, SLICES, END SEALS, SUPPORTS AND HARDWARE FOR A COMPLETE SYSTEM.
3. AMBIENT SENSING TEMPERATURE CONTROL
4. INTEGRATED GROUND FAULT PROTECTION

FAN SCHEDULE

MARK	SERVES	LOCATION	CFM	ESP	FAN SPEED (RPM)	DRIVE	MOTOR			NOTES
							BHP	POWER	VOLT/PH	
EF-1	MECHANICAL ROOM	INLINE	1,000	0.50	1,522	DIRECT	0.16	1/4 HP	208/1	1,2,3

NOTES:
1. MOTORIZED DAMPER
2. ELECTRONICALLY COMMUTATED MOTOR WITH UNIT MOUNTED POTENTIOMETER FOR SPEED ADJUSTMENT.
3. INTEGRAL DISCONNECT

PUMP SCHEDULE

MARK	LOCATION	SYSTEM SERVED	OPERATION	GPM	HEAD (FT)	TYPE	RPM	BHP	HP	VOLT/PH	NOTES
CWP-1	MECHANICAL	CHILLED WATER	DUTY	170	65	END SUCTION	1750	4.6	5	460/3	1,2
CWP-2	MECHANICAL	CHILLED WATER	STAND-BY	170	65	END SUCTION	1750	4.6	5	460/3	1,2
HWP-1	MECHANICAL	HEATING WATER	BOILER B-1	46	20	INLINE	1410	0.4	1	460/3	1,2
HWP-2	MECHANICAL	HEATING WATER	BOILER B-2	46	20	INLINE	1410	0.4	1	460/3	1,2
HWP-3	MECHANICAL	HEATING WATER	DUTY	46	40	END SUCTION	1620	0.8	1.5	460/3	1,2
HWP-4	MECHANICAL	HEATING WATER	STAND-BY	46	40	END SUCTION	1620	0.8	1.5	460/3	1,2

NOTES:
1. VARIABLE FREQUENCY DRIVE WITH INTEGRAL DISCONNECT.
2. INVERTER DUTY MOTOR WITH FACTORY GROUNDED SHAFT.

PROPANE CONDENSING BOILER SCHEDULE

MARK	LOCATION	TYPE	CAPACITY				WATER				ELECTRICAL DATA		FLUE DIA (IN)	COMBUSTION AIR DIA (IN)	NOTES
			MAX INPUT MBH	MIN OUTPUT MBH	MIN EFF	TURNDOWN	EWT (F)	LWT (F)	GPM	WPD (FT)	MCA	VOLTS/PH			
B-1	MECH RM	CONDENSING	750	690	92%	20:1	110	140	46	8	8	120/1	6	6	1,2,3
B-2	MECH RM	CONDENSING	750	690	92%	20:1	110	140	46	8	8	120/1	6	6	1,2,3

NOTES:
1. CONDENSATE NEUTRALIZATION KIT
2. PACKAGED CONTROLS WITH TOUCHSCREEN DISPLAY CONTROL PANEL COMPATIBLE WITH BUILDING BAS.
3. FIELD INSTALLED DISCONNECT

APPR | DATE | SYM | DESCRIPTION

NAVFAC

NAVY P.E. DIV OF MECHANICAL SEAL 041351 ENGINEER NORTH CAROLINA 06/25/20 SEAL

HDR
440 S. CHURCH STREET, SUITE 1000
CHARLOTTE, NC 28202
TEL (704)338-6700
A/E INFO

APPROVED
FOR COMMANDER NAVFAC 7/1/2020
ACTIVITY
Approved by Emily Sylvester, Director of Installation Development Division
SATISFACTORY TO DATE 06/19/2020

DES	MDD	DRW	BNR	CHK	CSW
PM/DM	SGL/RMS				
BRANCH MANAGER	ALG				
CHIEF ENGARCH	EJA				
FIRE PROTECTION					

DEPARTMENT OF THE NAVY
NAVAL FACILITIES ENGINEERING COMMAND
NAVAL FACILITIES ENGINEERING COMMAND ~ MID-ATLANTIC
CAMP LEJEUNE ~ JACKSONVILLE, NC
ALG
MARSOC
JACKSONVILLE, NORTH CAROLINA
P1395 MARINE RAIDER HEADQUARTERS
MECHANICAL SCHEDULES

SCALE: AS NOTED
EPROJECT NO.: 1603164
CONSTR. CONTR. NO.
NAVFAC DRAWING NO.
12794387
SHEET 168 OF 228
M-603
DRAWFORM REVISION: 17 APRIL 2018

C:\vk\20\16\1013683\3.ACENTRAL_P-1395 MARINE HQ_mark.dmsdf.rvt
6/25/2020 3:45:22 PM

OUTDOOR VENTILATION AIR CALCULATION

ROOM NUMBER	ROOM NAME	AREA	QUANTITY	OCCUPANCY CLASSIFICATION	DEFAULT OCCUPANCY DENSITY #/1000 SQFT	NUMBER OF PEOPLE - NOTE 1	PEOPLE OUTDOOR AIRFLOW RATE IN BREATHING ZONE CFM/PERSON (Rp)	CALCULATED O.A. BASED ON CFM/PERSON	AREA OUTDOOR AIRFLOW RATE IN BREATHING ZONE Ra CFM/SQFT	CALCULATED O.A. CFM BASED ON CFM/SQFT	REQUIRED O.A. = Rp + Ra	AIR DIST EFF.	CORRECTED OA REQUIRED	OA PROVIDED	OA SUM	EXHAUST AIR	NOTES
101	Women's Restroom	350	1	Requires Exhaust	-	-	-	-	-	-	-	0.8		275	275	350	
102	Men's Restroom	420	1	Requires Exhaust	-	-	-	-	-	-	-	0.8		425	425	500	
103	Security	50	1	Office spaces	5 people/1000 sqft	1	5 cfm/person	5	0.06 cfm/sqft	3	8	0.8	10	10	10	-	
104	Security Bunk	60	1	Bedroom/living room	10 people/1000 sqft	1	5 cfm/person	5	0.06 cfm/sqft	4	9	0.8	15	15	15	-	
105	Corridor 105	1090	1	Corridors	-	-	-	-	0.06 cfm/sqft	66	66	0.8	85	320	320	-	
106	Trash/Mant.	170	1	-	-	-	-	-	-	-	-	-	-	-	-	170	3
107	Comm	230	1	-	-	-	-	-	-	-	-	-	-	-	-	-	
108	Electrical	330	1	-	-	-	-	-	-	-	-	-	-	-	-	-	
109	Mechanical	890	1	-	-	-	-	-	-	-	-	-	-	-	-	-	
110	Fire Alarm Room	110	1	-	-	-	-	-	-	-	-	-	-	-	-	-	
200	Reception 200	295	1	Main entry lobbies	10 people/1000 sqft	3	5 cfm/person	15	0.06 cfm/sqft	18	33	0.8	45	45	45	-	
200	Reception Area Corridor	295	1	Corridors	-	-	-	-	0.06 cfm/sqft	18	18	0.8	25	25	25	-	
201	Conference	310	1	Conference Rooms	# from plan	16	5 cfm/person	80	0.06 cfm/sqft	19	99	0.8	125	125	125	125	
202	Conference	340	1	Conference Rooms	# from plan	17	5 cfm/person	85	0.06 cfm/sqft	21	106	0.8	135	135	135	135	
203	Breakroom	240	1	Break room	# from plan	12	5 cfm/person	60	0.12 cfm/sqft	29	89	0.8	115	115	115	180	3
204	T-SCIF	240	1	Office spaces	5 people/1000 sqft	2	5 cfm/person	10	0.06 cfm/sqft	15	25	0.8	35	35	35	-	
205	Office	130	1	Office spaces	5 people/1000 sqft	1	5 cfm/person	5	0.06 cfm/sqft	8	13	0.8	20	20	20	-	
206	Printer	110	1	Copy, printing rooms	4 people/1000 sqft	1	5 cfm/person	5	0.06 cfm/sqft	7	12	0.8	15	15	15	75	2
207	CO Office	200	1	Office spaces	5 people/1000 sqft	1	5 cfm/person	5	0.06 cfm/sqft	12	17	0.8	25	25	25	-	
208	Office	110	1	Office spaces	5 people/1000 sqft	1	5 cfm/person	5	0.06 cfm/sqft	7	12	0.8	15	20	20	-	
209	Office	110	1	Office spaces	5 people/1000 sqft	1	5 cfm/person	5	0.06 cfm/sqft	7	12	0.8	15	20	20	-	
210	Office	110	1	Office spaces	5 people/1000 sqft	1	5 cfm/person	5	0.06 cfm/sqft	7	12	0.8	15	20	20	-	
211	Office	110	1	Office spaces	5 people/1000 sqft	1	5 cfm/person	5	0.06 cfm/sqft	7	12	0.8	15	20	20	-	
212	Office	110	1	Office spaces	5 people/1000 sqft	1	5 cfm/person	5	0.06 cfm/sqft	7	12	0.8	15	20	20	-	
213	Office	110	1	Office spaces	5 people/1000 sqft	1	5 cfm/person	5	0.06 cfm/sqft	7	12	0.8	15	20	20	-	
214	Office	150	1	Office spaces	5 people/1000 sqft	1	5 cfm/person	5	0.06 cfm/sqft	9	14	0.8	20	20	20	-	
215	Green Ops Area - Interior	3690	1	Office spaces	# from plan	55	5 cfm/person	275	0.06 cfm/sqft	222	497	0.8	625	625	625	645	
215	Green Ops Area - Perimeter	640	1	Office spaces	# from plan	5	5 cfm/person	25	0.06 cfm/sqft	39	64	0.8	80	80	80	-	
217	Breakroom	220	1	Break room	# from plan	11	5 cfm/person	55	0.12 cfm/sqft	27	82	0.8	105	105	105	200	2
300	Corridor 300	140	1	Corridors	-	-	-	-	0.06 cfm/sqft	9	9	0.8	15	85	85	-	
301	Conference	420	1	Conference Rooms	# from plan	21	5 cfm/person	105	0.06 cfm/sqft	26	131	0.8	165	165	165	165	
302	Office	110	1	Office spaces	5 people/1000 sqft	1	5 cfm/person	5	0.06 cfm/sqft	7	12	0.8	15	20	20	-	
303	Office	110	1	Office spaces	5 people/1000 sqft	1	5 cfm/person	5	0.06 cfm/sqft	7	12	0.8	15	20	20	-	
304	Office	110	1	Office spaces	5 people/1000 sqft	1	5 cfm/person	5	0.06 cfm/sqft	7	12	0.8	15	20	20	-	
305	Office	110	1	Office spaces	5 people/1000 sqft	1	5 cfm/person	5	0.06 cfm/sqft	7	12	0.8	15	20	20	-	
306	Office	110	1	Office spaces	5 people/1000 sqft	1	5 cfm/person	5	0.06 cfm/sqft	7	12	0.8	15	20	20	-	
307	CO Office	160	1	Office spaces	5 people/1000 sqft	1	5 cfm/person	5	0.06 cfm/sqft	10	15	0.8	20	20	20	-	
308	Office	110	1	Office spaces	5 people/1000 sqft	1	5 cfm/person	5	0.06 cfm/sqft	7	12	0.8	15	20	20	-	
309	Secured Team Room	100	1	Office spaces	5 people/1000 sqft	1	5 cfm/person	5	0.06 cfm/sqft	6	11	0.8	15	20	20	-	
310	Purple Ops Area - INTERIOR	2100	1	Office spaces	# from plan	29	5 cfm/person	145	0.06 cfm/sqft	126	271	0.8	340	340	340	410	
310	Purple Ops Area - PERIMETER	420	1	Office spaces	# from plan	6	5 cfm/person	30	0.06 cfm/sqft	26	56	0.8	70	70	70		
311	Breakroom	170	1	Break room	# from plan	9	5 cfm/person	45	0.12 cfm/sqft	21	66	0.8	85	-	-	85	3
400	JTAC	1320	1	Office spaces	# from plan	15	5 cfm/person	75	0.06 cfm/sqft	80	155	0.8	195	195	195	220	
402	JTAC Control Room	200	1	Office spaces	5 people/1000 sqft	1	5 cfm/person	5	0.06 cfm/sqft	12	17	0.8	25	25	25	-	
500	Reception	90	1	Main entry lobbies	10 people/1000 sqft	1	5 cfm/person	5	0.06 cfm/sqft	6	11	0.8	15	15	15	-	2
501	Office	120	1	Office spaces	5 people/1000 sqft	1	5 cfm/person	5	0.06 cfm/sqft	8	13	0.8	20	20	20	-	
502	Office	180	1	Office spaces	5 people/1000 sqft	1	5 cfm/person	5	0.06 cfm/sqft	11	16	0.8	20	20	20	-	
503	Conference	330	1	Conference Rooms	# from plan	17	5 cfm/person	85	0.06 cfm/sqft	20	105	0.8	135	135	135	135	
504	Office	160	1	Office spaces	5 people/1000 sqft	1	5 cfm/person	5	0.06 cfm/sqft	10	15	0.8	20	20	20	-	
505	Office	120	1	Office spaces	5 people/1000 sqft	1	5 cfm/person	5	0.06 cfm/sqft	8	13	0.8	20	20	20	-	
506	Office	120	1	Office spaces	5 people/1000 sqft	1	5 cfm/person	5	0.06 cfm/sqft	8	13	0.8	20	20	20	-	
507	Office	120	1	Office spaces	5 people/1000 sqft	1	5 cfm/person	5	0.06 cfm/sqft	8	13	0.8	20	20	20	-	
508	Office	120	1	Office spaces	5 people/1000 sqft	1	5 cfm/person	5	0.06 cfm/sqft	8	13	0.8	20	20	20	-	
509	Office	120	1	Office spaces	5 people/1000 sqft	1	5 cfm/person	5	0.06 cfm/sqft	8	13	0.8	20	20	20	-	
510	Office	120	1	Office spaces	5 people/1000 sqft	1	5 cfm/person	5	0.06 cfm/sqft	8	13	0.8	20	20	20	-	
511	Office	120	1	Office spaces	5 people/1000 sqft	1	5 cfm/person	5	0.06 cfm/sqft	8	13	0.8	20	20	20	-	
512	Office	280	1	Office spaces	5 people/1000 sqft	2	5 cfm/person	10	0.06 cfm/sqft	17	27	0.8	35	35	35	-	
514	Open Office 514 - Interior	4725	1	Office spaces	# from plan	48	5 cfm/person	240	0.06 cfm/sqft	284	524	0.8	655	655	655	690	
514	Open Office 514 - Perimeter N Wall	450	1	Office spaces	# from plan	6	5 cfm/person	30	0.06 cfm/sqft	27	57	0.8	75	75	75	-	
514	Open Office 514 - Perimeter S Wall	715	1	Office spaces	# from plan	6	5 cfm/person	30	0.06 cfm/sqft	43	73	0.8	95	95	95	-	
515	Blue Ops Area - Interior	1820	1	Office spaces	# from plan	22	5 cfm/person	110	0.06 cfm/sqft	110	220	0.8	275	275	275	350	
515	Blue Ops Area - Perimeter	480	1	Office spaces	# from plan	6	5 cfm/person	30	0.06 cfm/sqft	29	59	0.8	75	75	75	-	
518	Printer	80	1	Copy, printing rooms	4 people/1000 sqft	1	5 cfm/person	5	0.06 cfm/sqft	5	10	0.8	15	15	15	100	2
												TOTAL:	4165	5150	5150	4535	

NOTE:
1. NUMBER OF OCCUPANTS LISTED IS FOR INFORMATION PURPOSES ONLY.
2. VENTILATION AIR PROVIDE IN ADJACENT CONNECTED SPACE
3. VENTILATION/MAKE-UP AIR TRANSFERRED FROM ADJACENT SPACE

OUTDOOR DESIGN CONDITIONS

SUMMER - COOLING		WINTER DB (F)
DB (F)	WB (F)	
91	77	
SUMMER - DEHUMIDIFICATION		
MOISTURE (GR/LB)	DB (F)	26.8
141	84	

INDOOR DESIGN CONDITIONS

SPACE TYPE	SUMMER - COOLING		WINTER DB (F)
	DB (F)	% RH	
OFFICES, CONFERENCE ROOM, COMMON AREAS	78	50	68
FIRE ALARM ROOM	78	50	68
TELECOM AND ELECTRICAL	78	50	-
MECHANICAL ROOM	10+ AMBIENT	-	55

APPR | DATE | SYM | DESCRIPTION

NAVFAC

MARK D. DIMOFF MECHANICAL SEAL 041351 ENGINEER NORTH CAROLINA
06|25|20
SEAL

HDR
440 S. CHURCH STREET, SUITE 1000
CHARLOTTE, NC 28202
TEL (704)338-6700
A/E INFO

APPROVED
FOR COMMANDER NAVFAC 7/01/2020
ACTIVITY
Approved by Emily Sylvester, Director of Installation Development Division
SATISFACTORY TO DATE 06/19/2020
DES MDD | DRW BNR | CHK CSW
PM/DM SGL/RMS
BRANCH MANAGER ALG
CHIEF ENGARCH EJA
FIRE PROTECTION

DEPARTMENT OF THE NAVY
NAVAL FACILITIES ENGINEERING COMMAND ~ MID-ATLANTIC
CAMP LEJEUNE - JACKSONVILLE, NC
ALG | MARSOC
JACKSONVILLE, NORTH CAROLINA
P1395 MARINE RAIDER HEADQUARTERS
OUTSIDE AIR AND DESIGN CONDITIONS

SCALE: AS NOTED
EPROJECT NO.: 1603164
CONSTR. CONTR. NO.
NAVFAC DRAWING NO.
12794388
SHEET 169 OF 228

M-604

DRAWFORM REVISION: 17 APRIL 2018

C:\n\420181013\8813-M-CENTRAL_P-1395 MARINE HQ_mark.dimoff.rvt
6/25/2020 3:45:26 PM

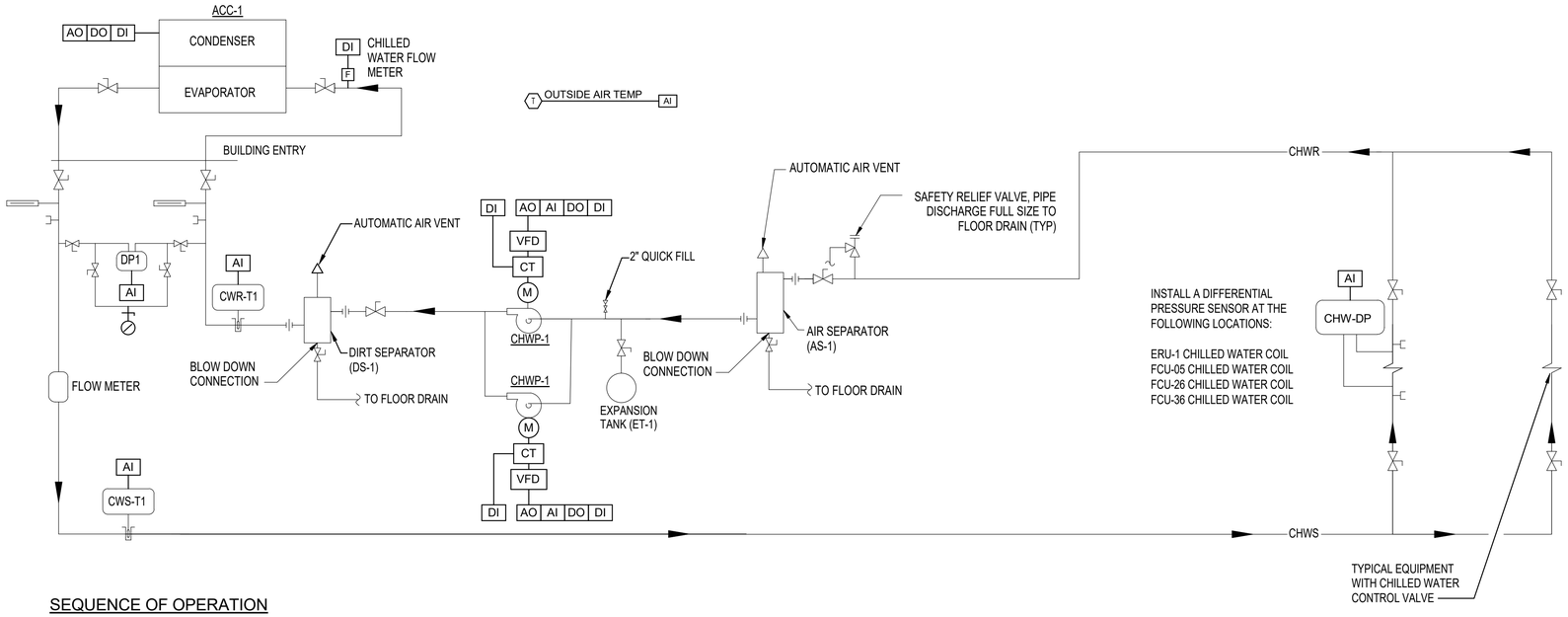

GENERAL NOTES

1. NOT ALL VALVES, FITTINGS, AND ACCESSORIES ARE SHOWN ON THIS SCHEMATIC FLOW DIAGRAM. SEE DETAIL SHEETS FOR ADDITIONAL INFORMATION.
2. REFER TO INDIVIDUAL EQUIPMENT DETAILS FOR ADDITIONAL INFORMATION AND PIPING OF PUMPS, COILS, AND OTHER EQUIPMENT.
3. INSTALL P/T PORTS AT ALL PRESSURE AND TEMPERATURE SENSORS.
4. CONTROLS CONTRACTOR SHALL PROVIDE ALL COMPONENTS NECESSARY TO PERFORM THE SEQUENCES AND FUNCTIONS NOTED TO INCLUDED, BUT NOT LIMITED TO, CONTROLLERS, SENSORS, CONTROL DAMPERS, AIRFLOW SENSORS, ETC. UNLESS FACTORY PROVIDED CONTROLLER AND SENSORS ARE REQUIRED BY THE MANUFACTURER TO MAINTAIN EQUIPMENT WARRANTY.
5. CONTROLLERS, SENSORS, CONTROL DAMPERS, AIRFLOW SENSORS, ETC. MAY BE PROVIDED INTEGRAL TO THE EQUIPMENT IF CAPABLE OF PERFORMING THE SEQUENCES AND FUNCTIONS INDICATED.
6. CONTROLS SHALL RE-ENERGIZE AND HVAC AND PLUMBING SYSTEM OPERATION SHALL BE RESTORED FOLLOWING A POWER OUTAGE.

SEQUENCE OF OPERATION

CHILLED WATER SYSTEM START-UP SEQUENCE:
THE BUILDING AUTOMATION SYSTEM (BAS) SHALL CONTROL THE CHILLER, CHILLED WATER SYSTEM PUMPS, AND CONTROL VALVES.

AIR COOLED CHILLER CONTROL
CHILLER INTERLOCKS SHALL START ASSOCIATED LEAD CHILLED WATER PUMP (CWP-1 OR CWP-2).

THE BAS SHALL INITIATE THE CHILLER START SEQUENCE WHENEVER ONE ON THE FOLLOWING OCCURS:
(A) MANUAL START,
(B) THERE IS A CALL FOR COOLING ON ANY COOLING COILS AS SENSED BY THE OPENING OF THE COIL COOLING WATER CONTROL VALVE.

THE CHILLER START SEQUENCE INCLUDES THE FOLLOWING:
(A) LEAD CHILLED WATER PUMP (CWP-1 OR CWP-2) SHALL ENERGIZE,
(B) AFTER PUMP IS ENERGIZED, FLOW IS PROVEN AND ALL CHILLER SAFETIES SATISFIED
(C) THE CHILLER WILL BE ENERGIZED. THE CHILLER SHALL BE CONTROLLED BY ITS INTERNAL CONTROLS TO PROVIDE SUPPLY WATER AT SET POINT TEMPERATURE, 42°F (ADJ).

IF CHILLED WATER CONTROL VALVES OF ALL MONITORED EQUIPMENT ARE CLOSED AS INDICATED BY VALVE POSITION FOR A MINIMUM OF 5-MINUTES (ADJ), THE CHILLER SHALL DE-ENERGIZE AND LEAD CHILLED WATER PUMP (CWP-1 OR CWP-2) SHALL DE-ENERGIZE.

CHILLED WATER FLOW THROUGH THE CHILLER SHALL MODULATE TO MAINTAIN CHILLED WATER SUPPLY TEMPERATURE AS SENSED BY CWS-T1.

VARIABLE SPEED CHILLED WATER PUMPS:
BUILDING CHILLED WATER PUMPS CWP-1 AND CWP-2 ARE SIZED TO ACCOMMODATE 100-PERCENT OF THE DESIGNATED SYSTEM FLOW AND SHALL OPERATE AS LEAD-STANDBY.

IF REQUIRED TO RUN, THE LEAD PUMP SHALL BE COMMANDED ON. IF THE LEAD PUMP FAILS TO OPERATE AFTER A 30 SECOND TIME DELAY (ADJ) WHEN COMMANDED TO RUN, AS SENSED BY THE CURRENT SENSING RELAY, THE LEAD PUMP SHALL BE COMMANDED OFF, AND AN ALARM SHALL BE ISSUED. THE STANDBY PUMP SHALL BE COMMANDED ON IN THE EVENT THE LEAD PUMP FAILS.

THE CONTROL SYSTEM SHALL ALTERNATE THE LEAD AND STAND-BY PUMPS TO EQUALIZE RUNTIME OF PUMPS AND BOILERS BASED ON THE FOLLOWING USER SELECTABLE CONDITIONS:
(A) MANUALLY THROUGH A SOFTWARE SWITCH
(B) IF PUMP RUNTIME IS EXCEEDED
(C) ALTERNATED DAILY, WEEKLY, OR MONTHLY AS SELECTED BY USER.

THE BUILDING CHILLED WATER PUMPS CWP-1 AND CWP-2 SPEED SHALL MODULATE TO MAINTAIN THE MINIMUM COOLING WATER DIFFERENTIAL SETPOINT OF 3 PSIG (ADJ) AT THE HYDRONICALLY MOST DEMANDING OF THE BUILDING DIFFERENTIAL PRESSURE SENSORS THAT IS ACTIVE.

MINIMUM PUMP FLOW:
CHILLED WATER MINIMUM FLOW SHALL BE MAINTAINED THROUGH 3-WAY VALVES LOCATED THROUGHOUT THE SYSTEM

FREEZE PROTECTION:
THE LEAD CHILLED WATER PUMP SHALL ALSO RUN FOR FREEZE PROTECTION AT MINIMUM SPEED WHENEVER THE OUTSIDE AIR TEMPERATURE IS LESS THAN A USER DEFINABLE SETPOINT, 40°F (ADJ).

CHILLED WATER SUPPLY TEMPERATURE SETPOINT:
THE CHILLED WATER SUPPLY TEMPERATURE SETPOINT SHALL RESET BASED ON OUTSIDE AIR TEMPERATURE.

AS OUTSIDE AIR TEMPERATURE DROPS FROM 75°F (ADJ) TO 50°F (ADJ) THE CHILLED WATER SUPPLY TEMPERATURE SETPOINT SHALL RESET UPWARDS BY ADDING FROM 42°F (ADJ) TO 50°F (ADJ).

INPUT/OUTPUT LIST

Point Name	HARDWARE POINTS AI	AO	DI	DO	SOFTWARE POINTS AV	DV	TREND	ALARM	NORMAL / FAIL POSITION	SHOW ON GRAPHIC
CHILLED WATER FLOW WATER	X						X			X
CHILLED WATER DIFFERENTIAL PRESSURE DP	X						X			X
CHILLED WATER RETURN TEMP CWS-T1	X						X			X
CHILLED WATER SUPPLY TEMP CWR-T1	X						X			X
OUTSIDE AIR TEMP	X						X			X
CHILLED WATER PUMP CWP-1 VFD SPEED	X	X					X			X
CHILLED WATER PUMP CWP-2 VFD SPEED	X	X					X			X
CHILLED WATER SUPPLY TEMP SETPOINT RESET		X					X			X
CHILLED WATER FLOW SWITCH			X				X			X
CHILLED WATER PUMP CWP-1 STATUS			X					X		X
CHILLED WATER PUMP CWP-1 VFD FAULT			X					X		X
CHILLED WATER PUMP CWP-2 STATUS			X					X		X
CHILLED WATER PUMP CWP-2 VFD FAULT			X					X		X
CHILLER STATUS			X					X		X
CHILLED WATER PUMP CWP-1 START/STOP				X			X			X
CHILLED WATER PUMP CWP-2 START/STOP				X			X			X
CHILLER ENABLE				X			X			X
CHILLED WATER TEMPERATURE SETPOINT					X		X			X
CHILLED WATER PUMP CWP-1 FAILURE								X		
CHILLED WATER PUMP CWP-1 RUNNING IN HAND								X		
CHILLED WATER PUMP CWP-2 FAILURE								X		
CHILLED WATER PUMP CWP-2 RUNNING IN HAND								X		
CHILLER FAILURE								X		
CHILLER RUNNING IN HAND								X		
CHILLER RUNTIME EXCEEDED								X		
HIGH CHILLED WATER DIFFERENTIAL PRESSURE								X		
HIGH CHILLED WATER SUPPLY TEMP								X		
LOW CHILLED WATER DIFFERENTIAL PRESSURE								X		
LOW CHILLED WATER FLOW								X		
LOW CHILLED WATER SUPPLY TEMP								X		
TOTALS	**7**	**3**	**6**	**3**	**1**	**0**	**13**	**17**		**18**
TOTAL HARDWARE:			19		TOTAL SOFTWARE:			31		

NOTES:
NORMAL / FAIL POSTION: C- CLOSED L - LAST

CHILLED WATER SYSTEM CONTROL DIAGRAM

NO SCALE

APPR | DATE | SYM | DESCRIPTION

NAVFAC

MARK D. DIMOFF, MECHANICAL, SEAL 041351, ENGINEER, NORTH CAROLINA, 06/25/20, SEAL

HDR
440 S. CHURCH STREET, SUITE 1000
CHARLOTTE, NC 28202
TEL (704)338-6700
A/E INFO

APPROVED
FOR COMMANDER NAVFAC 7/10/2020
ACTIVITY
Approved by Emily Sylvester, Director of Installation Development Division
SATISFACTORY TO DATE 06/19/2020
DES MDD | DRW MDD | CHK CSW
PM/DM SGL/RMS
BRANCH MANAGER ALG
CHIEF ENG/ARCH EJA
FIRE PROTECTION

DEPARTMENT OF THE NAVY
NAVAL FACILITIES ENGINEERING COMMAND – MID-ATLANTIC
CAMP LEJEUNE - JACKSONVILLE, NC
ALG
MARSOC
JACKSONVILLE, NORTH CAROLINA
P1395 MARINE RAIDER HEADQUARTERS
MECHANICAL CONTROLS - CHILLED WATER

SCALE: AS NOTED
EPROJECT NO.: 1603164
CONSTR. CONTR. NO.
NAVFAC DRAWING NO. 12794389
SHEET 170 OF 228
M-701
DRAWFORM REVISION: 17 APRIL 2018

C:\vd2016\101396\13-MCENTRAL_P-1395 MARINE HQ_mark.dimoff.rvt
6/25/2020 3:45:27 PM

D

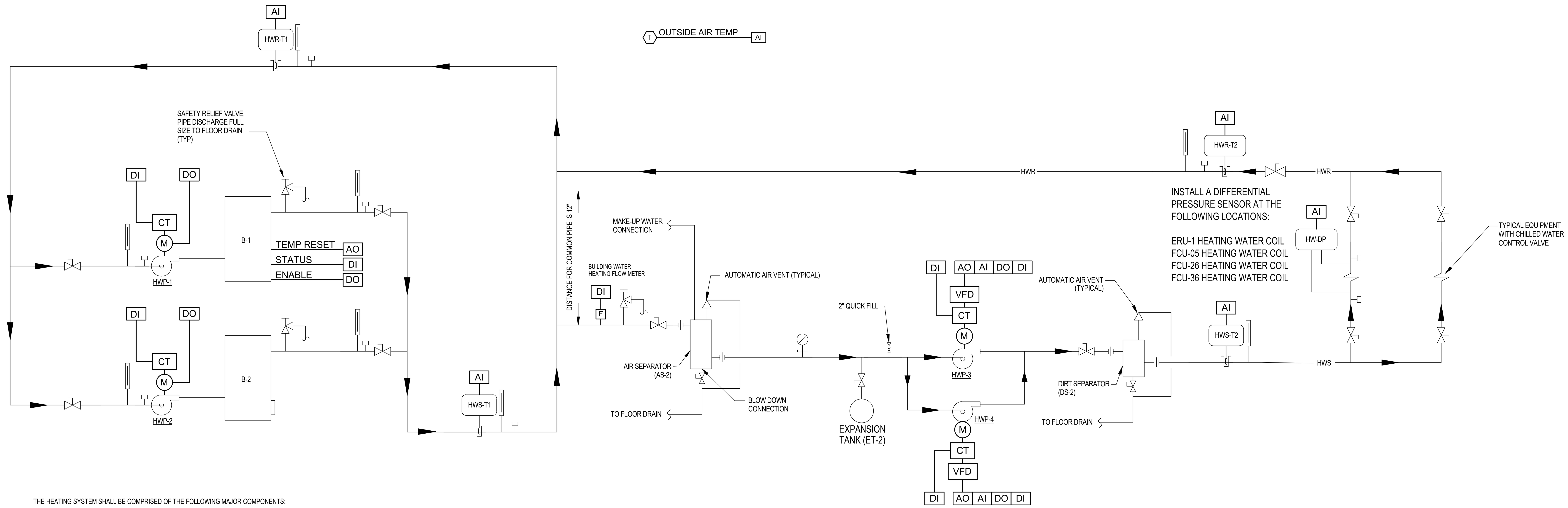

C

THE HEATING SYSTEM SHALL BE COMPRISED OF THE FOLLOWING MAJOR COMPONENTS:

A) TWO HEATING WATER BOILERS WITH EACH BOILER SIZED TO ACCOMMODATE 100-PERCENT OF THE HEATING DEMAND,
B) A CONSTANT VOLUME BOILER PUMP DEDICATED TO EACH BOILER,
C) TWO VARIABLE SPEED HEATING WATER SECONDARY PUMPS WITH EACH PUMP SIZED TO ACCOMMODATE 100-PERCENT OF THE HEATING WATER FLOW RATE.

A FACTORY PROVIDED BOILER MANAGEMENT SYSTEM, INCLUDING BOILER INTERNAL SAFETIES, SHALL CONTROL AND SEQUENCE THE BOILERS AND BOILER PUMPS. BOILERS B-1 AND B-2

SAFETIES SHALL BE MONITORED INCLUDING BOILER ALARM AND LOW WATER LEVEL ALARM WHICH SHALL BE SENT TO THE BAS INDICATING "BOILER ALARM" AND" LOW WATER LEVEL". THE BOILER MANAGEMENT SYSTEM SHALL INTERFACE AND COMMUNICATE WITH THE BUILDING AUTOMATION SYSTEM (BAS).
IN THE EVENT A BOILER AND OR BOILER PUMP FAILS TO ENERGIZE OR FAILS DURING OPERATION AN ALARM SHALL BE SENT TO THE BAS.
ALARMS SHALL BE PROVIDED FOR BOILERS B-1 AND B-2 FOR THE FOLLOWING CONDITIONS:

A) FAILURE: COMMAND ON BUT STATUS IS OFF
B) RUNNING IN HAND: COMMANDED OFF BUT THE STATUS IS ON
C) RUN TIME EXCEEDED: STATUS RUN TIME EXCEEDS THE USER DEFINABLE LIMIT,
D) LEAD BOILER FAILURE. THE BOILER CONTROL SYSTEM SHALL LOCK-OUT THE FAILED BOILER AND PUMP AND ENERGIZE THE LAG BOILER AND AFFILIATED PUMP.

THE HEATING WATER SYSTEM SHALL ENERGIZE WHEN THE OUTSIDE TEMPERATURE IS LESS THAN 65°F (ADJ) OR ON A CALL FOR HEATING AS SENSED BY THE OPENING OF ANY BAS MONITORED HEATING WATER CONTROL VALVE. TO PREVENT SHORT CYCLING EACH BOILER WILL RUN FOR AND BE OFF FOR MINIMAL ADJ TIMES (BOTH USER DEFINED), UNLESS SHUTDOWN ON SAFETIES.

BOILERS (B-1 AND B-2), AND DEDICATED BOILER CIRCULATION PUMPS (HWP-1 AND HWP-2) SHALL BE CONTROLLED AND SEQUENCED BY A FACTORY PROVIDED BOILER MANAGEMENT CONTROL SYSTEM. THE BOILERS SHALL OPERATE IN A LEAD-STANDBY ARRANGEMENT.

THE CONTROL SYSTEM SHALL ALTERNATE THE LEAD AND STAND-BY BOILERS TO EQUALIZE RUNTIME OF PUMPS AND BOILERS BASED ON THE FOLLOWING USER SELECTABLE CONDITIONS:

A) MANUALLY THROUGH A SOFTWARE SWITCH
B) IF BOILER RUNTIME IS EXCEEDED
C) ALTERNATED DAILY, WEEKLY, OR MONTHLY AS SELECTED BY USER.

UPON A CALL FOR HEATING, THE BOILER CONTROL SYSTEM SHALL ENERGIZE THE LEAD BOILER PUMP (HWP-1 OR HWP-2) AND BOILER (B-1 OR B-2) AFTER PUMP FLOW IS PROVEN. BOILER PUMPS HWP-1 AND HWP-2 SHALL RUN ANY TIME THEIR AFFILIATED BOILER IS CALLED TO RUN AND SHALL INCLUDE A USER DEFINABLE ADJ DELAY WHEN CALLED TO DE-ENERGIZE.
IN THE EVENT A BOILER CIRCULATION PUMP FAILS AN ALARM SHALL BE SENT TO THE BAS AS INDICATED BY THE FOLLOWING CONDITIONS:

A) BOILER CIRCULATION PUMP (HWP-1 OR HWP-2) FAILURE: COMMANDED ON BUT THE STATUS IS OFF
B) BOILER CIRCULATION PUMP (HWP-1 OR HWP-2) RUNNING IN-HAND: COMMAND OFF BUT THE STATUS IS ON
C) BOILER CIRCULATION PUMP RUN-TIME EXCEEDED: STATUS RUN-TIME EXCEEDS A USER DEFINABLE LIMIT.

THE LEAD BOILER SHALL MODULATE TO MAINTAIN A HEATING WATER SUPPLY TEMPERATURE OF 14O F (ADJ) AS SENSED BY TEMPERATURE SENSOR HWS-T1. IF ALL EQUIPMENT MONITORED CONTROL VALVES ARE CLOSED FOR 5-MINUTES (ADJ), THE BOILERS AND AFFILIATED BOILER PUMPS SHALL DE-ENERGIZE AND THE OPERATING SECONDARY PUMP (HWP-3 OR HWP-4) SHALL DE-ENERGIZE.

IF THE LEAD BOILER IS OPERATING AT 50 PERCENT OR ABOVE CAPACITY, THE SECOND BOILER SHALL BE ENERGIZED AND BOTH BOILERS SHALL OPERATE AT REDUCED CAPACITY TO PROVIDE HIGHER EFFICIENCY.

VARIABLE SPEED SECONDARY BUILDING HEATING WATER PUMP CONTROL (HWP-3 & HWP-4):
BUILDING HEATING WATER PUMPS HWP-3 AND HWP-4 SHALL BE STARTED, STOPPED, AND CONTROLLED BY THE BAS SYSTEM. THE LEAD PUMP SHALL RUN CONTINUOUSLY WHENEVER ONE ON THE FOLLOWING OCCURS:

(A) MANUAL START,
(B) THERE IS A CALL FOR HEATING ON ANY HEATING COIL AS SENSED BY THE OPENING OF THE COIL HEATING WATER CONTROL VALVE.

BUILDING HEATING WATER PUMPS HWP-3 AND HWP-4 ARE SIZED TO ACCOMMODATE 100-PERCENT OF THE DESIGNATED SYSTEM FLOW AND SHALL OPERATE AS LEAD-STANDBY.

IF REQUIRED TO RUN, THE LEAD PUMP SHALL BE COMMANDED ON. IF THE LEAD PUMP FAILS TO OPERATE AFTER A 30 SECOND TIME DELAY (ADJ) WHEN COMMANDED TO RUN, AS SENSED BY THE CURRENT SENSING RELAY, THE LEAD PUMP SHALL BE COMMANDED OFF, AND AN ALARM SHALL BE ISSUED. THE STANDBY PUMP SHALL BE COMMANDED ON IN THE EVENT THE LEAD PUMP FAILS.

THE CONTROL SYSTEM SHALL ALTERNATE THE LEAD AND STAND-BY SECONDARY HEATING WATER PUMPS TO EQUALIZE RUNTIME OF PUMPS BASED ON THE FOLLOWING USER SELECTABLE CONDITIONS:

A) MANUALLY THROUGH A SOFTWARE SWITCH
B) IF PUMP RUNTIME IS EXCEEDED
C) ALTERNATED DAILY, WEEKLY, OR MONTHLY AS SELECTED BY USER.

THE BUILDING LOOP PUMPS (HWP-3 & HWP-4) SPEED SHALL MODULATE TO MAINTAIN THE MINIMUM HEATING WATER DIFFERENTIAL SETPOINT OF 10 PSIG (ADJ) AT THE HYDRONICALLY MOST DEMANDING OF THE BUILDING DIFFERENTIAL PRESSURE SENSORS THAT IS ACTIVE. THE BUILDING DIFFERENTIAL PRESSURE SENSORS SHALL BE LOCATED AS INDICATED ON THE CONTROL DIAGRAM.

MINIMUM PUMP FLOW:
HEATING WATER MINIMUM FLOW SHALL BE MAINTAINED THROUGH 3-WAY VALVES LOCATED THROUGHOUT THE SYSTEM.

HEATING WATER TEMPERATURE RESET CONTROL
HEATING WATER SUPPLY TEMPERATURE SHALL HAVE RESET CONTROL BASED ON OUTDOOR TEMPERATURE. AS OUTDOOR TEMPERATURE RISES FROM 0°F (ADJ) TO 70°F (ADJ) THE HEATING WATER SUPPLY TEMPERATURE SETPOINT SHALL RESET PROPORTIONALLY DOWNWARDS FROM 140°F (ADJ) TO 120°F (ADJ).

ADDITIONAL ALARMS:

(A) HIGH PRIMARY HEATING WATER SUPPLY TEMPERATURE: IF HEATING WATER SUPPLY TEMPERATURE AS SENSED BY HWS-T1 IS GREATER THAN 180°F (ADJ).
(B) LOW PRIMARY HEATING WATER SUPPLY TEMPERATURE: IF HEATING WATER SUPPLY TEMPERATURE AS SENSED BY HWS-T1 IS LESS THAN 100°F (ADJ).

INPUT/OUTPUT LIST

	HARDWARE POINTS				SOFTWARE POINTS					
Point Name	**AI**	**AO**	**DI**	**DO**	**AV**	**DV**	**TREND**	**ALARM**	**NORMAL / FAIL POSITION**	**SHOW ON GRAPHIC**
HEATING WATER FLOW WATER	X						X			X
BOILER LOOP HOT WATER SUPPLY TEMP - HWS-T1	X						X			X
BOILER LOOP HOT WATER RETURN TEMP - HWR-T1	X						X			X
BUILDING LOOP HOT WATER SUPPLY TEMP - HWS-T2	X						X			X
BUILDING LOOP HOT WATER RETURN TEMP - HWR-T2	X						X			X
HEATING WATER DIFFERENTIAL PRESSURE DP	X						X			X
OUTSIDE AIR TEMP	X									X
BOILER 1 HOT WATER SUPPLY TEMP SETPOINT RESET		X					X			X
BOILER 2 HOT WATER SUPPLY TEMP SETPOINT RESET		X					X			X
HOT WATER PUMP HWP-3 VFD SPEED	X	X					X			X
HOT WATER PUMP HWP-4 VFD SPEED	X	X					X			X
BOILER B-1 STATUS			X				X			X
BOILER B-2 STATUS			X				X			X
BOILER PUMP HWP-1 STATUS			X				X			X
BOILER PUMP HWP-2 STATUS			X				X			X
HOT WATER PUMP HWP-3 STATUS			X				X			X
HOT WATER PUMP HWP-3 VFD FAULT			X					X		X
HOT WATER PUMP HWP-4 STATUS			X				X			X
HOT WATER PUMP HWP-4 VFD FAULT			X					X		X
BOILER B-1 ENABLE				X						X
BOILER B-2 ENABLE				X						X
BOILER PUMP HWP-1 START/STOP				X			X			X
BOILER PUMP HWP-2 START/STOP				X			X			X
HOT WATER PUMP HWP-3 START/STOP				X						X
HOT WATER PUMP HWP-4 START/STOP				X						X
BOILER B-1 FAILURE								X		
BOILER B-1 RUNNING IN HAND								X		
BOILER B-1 RUNTIME EXCEEDED								X		
BOILER B-2 FAILURE								X		
BOILER B-2 RUNNING IN HAND								X		
BOILER B-2 RUNTIME EXCEEDED								X		
BOILER PUMP HWP-1 FAILURE								X		
BOILER PUMP HWP-1 RUNNING IN HAND								X		
BOILER PUMP HWP-1 RUNTIME EXCEEDED								X		
BOILER PUMP HWP-2 FAILURE								X		
BOILER PUMP HWP-2 RUNNING IN HAND								X		
BOILER PUMP HWP-2 RUNTIME EXCEEDED								X		
HIGH PRIMARY HOT WATER SUPPLY TEMP								X		
HOT WATER PUMP HWP-3 FAILURE								X		
HOT WATER PUMP HWP-3 RUNNING IN HAND								X		
HOT WATER PUMP HWP-3 RUNTIME EXCEEDED								X		
HOT WATER PUMP HWP-3 FAILURE								X		
HOT WATER PUMP HWP-3 RUNNING IN HAND								X		
HOT WATER PUMP HWP-3 RUNTIME EXCEEDED								X		
LEAD BOILER FAILURE								X		X
LOW HOT WATER DIFFERENTIAL PRESSURE								X		
LOW PRIMARY HOT WATER SUPPLY TEMP								X		
TOTALS	**9**	**4**	**8**	**6**	**0**	**0**	**18**	**24**		**26**
		TOTAL HARDWARE:		27	TOTAL SOFTWARE:			42		

NOTES:
NORMAL / FAIL POSTION: C- CLOSED L - LAST

B

A

HEATING WATER SYSTEM CONTROL DIAGRAM

NO SCALE

C:\rvt\2016\10136813-M-CENTRAL_P-1395 MARINE HQ_mark.dimoff.rvt
6/25/2020 3:45:28 PM

SYM	DESCRIPTION	DATE	APPR

NAVFAC

MARK P. DIMOFF MECHANICAL SEAL 041351 ENGINEER NORTH CAROLINA 06/25/20 SEAL

HDR
440 S. CHURCH STREET, SUITE 1000
CHARLOTTE, NC 28202
TEL (704)338-6700
A/E INFO

APPROVED
James E. Donahue, R.A.
FOR COMMANDER NAVFAC 7/10/2020
ACTIVITY
Approved by Emily Sylvester, Director of Installation Development Division
SATISFACTORY TO DATE 06/19/2020
DES MDD DRW MDD CHK CSW
PM/DM SGL/RMS
BRANCH MANAGER ALG
CHIEF ENG/ARCH EJA
FIRE PROTECTION

DEPARTMENT OF THE NAVY
NAVAL FACILITIES ENGINEERING COMMAND
NAVAL FACILITIES ENGINEERING COMMAND ~ MID-ATLANTIC
CAMP LEJEUNE - JACKSONVILLE, NC
ALG
MARSOC
JACKSONVILLE, NORTH CAROLINA
P1395 MARINE RAIDER HEADQUARTERS
MECHANICAL CONTROLS - HEATING WATER

SCALE: AS NOTED
EPROJECT NO.: 1603164
CONSTR. CONTR. NO.
NAVFAC DRAWING NO. 12794390
SHEET 171 OF 228
M-702

DRAWFORM REVISION: 17 APRIL 2018

INPUT/OUTPUT LIST

Point Name	HARDWARE POINTS AI	AO	DI	DO	SOFTWARE POINTS AV	DV	TREND	ALARM	NORMAL / FAIL POSITION	SHOW ON GRAPHIC
CO2 LEVEL - ZONE (QTY 10)	X						X			X
CO2 LEVEL - OUTSIDE AIR	X						X			X
EMERGENCY SHUTOFF SWITCH	X									
EXHAUST AIR TEMP	X						X			X
EXHAUST AIR HUMIDITY	X						X			X
EXHAUST AIRFLOW	X						X			X
ENERGY RECOVERY WHEEL DISCHARGE TEMP	X						X			X
ENERGY RECOVERY WHEEL DISCHARGE HUMIDITY	X						X			X
ENERGY RECOVERY WHEEL SPEED	X									
FILTER DIFFERENTAIL - INTAKE PREFILTER	X						X	X		X
FILTER DIFFERENTAIL - INTAKE FINAL FILTER	X						X	X		X
FILTER DIFFERENTAIL - EXHAUST FILTER	X						X	X		X
OUTSIDE AIR TEMP	X						X			X
OUTSIDE AIR HUMIDITY	X						X			X
OUTSIDE AIRFLOW	X						X			X
SUPPLY AIR STATIC PRESSURE	X						X			X
SUPPLY AIR TEMP	X						X			X
SUPPLY AIR HUMIDITY	X						X			X
VAV/CAV AIRFLOW (QTY 17)	X						X			X
VAV/CAV DAMPER POSITION (QTY 17)	X	X					X			X
COOLING COIL VALVE	X	X					X		C / C	X
RE-HEAT COIL VALVE	X	X					X		C / O	X
ENERGY RECOVERY WHEEL VFD SPEED	X	X					X			X
EXHAUST FAN VFD SPEED	X	X					X			X
SUPPLY FAN VFD SPEED	X	X					X			X
EXHAUST AIR DAMPER			X	X					C / L	X
INTAKE AIR DAMPER			X	X					C / L	X
ENERGY RECOVERY WHEEL MOTOR STATUS			X				X	X		X
ENERGY RECOVERY WHEEL ROTATION STATUS			X				X	X		X
ENERGY RECOVERY WHEEL VFD FAULT			X					X		X
EXHAUST FAN STATUS			X				X	X		X
EXHAUST FAN VFD FAULT			X					X		X
FREEZESTAT			X					X		X
SUPPLY FAN STATUS			X				X	X		X
SUPPLY FAN VFD FAULT			X					X		X
ENERGY RECOVERY WHEEL START/STOP				X			X			X
EXHAUST FAN START/STOP				X			X			X
SUPPLY FAN START/STOP				X			X			X
SUPPLY AIR STATIC PRESSURE SETPOINT					X		X			X
LOW ENERGY RECOVERY WHEEL DISCHARGE TEMP								X		
HIGH SUPPLY AIR TEMP								X		
LOW SUPPLY AIR TEMP								X		
HIGH SUPPLY AIR HUMIDITY								X		
SUPPLY FAN IN HAND								X		
EXHASUT FAN IN HAND								X		
HIGH SUPPLY AIR STATIC PRESSURE								X		
LOW SUPPLY AIR STATIC PRESSURE								X		
ENERGY RECOVERY WHEEL IN HAND								X		
HIGH CO2 LEVELS								X		
INTAKE AIR DAMPER FAILURE								X		
EXHAUST AIR DAMPER FAILURE								X		
HEAT WHEEL ROTATION FAILURE								X		
TOTALS	**66**	**22**	**10**	**5**	**1**	**0**	**72**	**24**		**37**
			TOTAL HARDWARE:	103	TOTAL SOFTWARE:			97		

NOTES:
NORMAL / FAIL POSTION: O - OPEN C- CLOSED L- LAST POSITION

SEQUENCE OF OPERATION

RUN CONDITIONS - SCHEDULED: THE ENERGY RECOVERY UNIT (ERU) SHALL RUN ACCORDING TO A USER DEFINABLE TIME SCHEDULE IN THE FOLLOWING MODES:

OCCUPIED MODE: THE UNIT SHALL BE ON AND RUN CONTINUOUSLY
UNOCCUPIED MODE: THE UNIT SHALL BE OFF

BUILDING SHALL BE NORMALLY OCCUPIED. UNOCCUPIED MODE SHALL BE MANUALLY CONTROLLED.

OCCUPIED MODE:
THE UNIT SHALL MAINTAIN A 70°F (ADJ) LEAVING AIR DRY BULB TEMPERATURE SETPOINT AND A 50% (ADJ) LEAVING AIR RELATIVE HUMIDITY SETPOINT.

FREEZE PROTECTION: THE ENERGY RECOVERY WHEEL SHALL OPERATE AT 5% SPEED (ADJ) WHENEVER THE OUTDOOR AIR TEMPERATURE IS BELOW 15°F (ADJ).

THE VENTILATION SYSTEM SHALL BE SHUTDOWN, INTAKE AND EXHAUST AIR DAMPERS SHALL CLOSE, ALL COIL CONTROL VALVES SHALL OPEN FULLY (PRE-HEAT, COOLING, AND RE-HEAT) AND AN ALARM SHALL BE PROVIDED IF:
(A) THE WHEEL DISCHARGE TEMPERATURE IS BELOW 40°F (ADJ).
(B) FREEZESTAT ON THE COOLING COIL DETECTION OF LOW (PRE-SET) TEMPERATURE CONDITIONS. FREEZESTAT CONTROL SHALL BE HARD WIRED TO THE FANS, DAMPERS, AND PRE-HEAT VALVE.

FILTER DIFFERENTIAL PRESSURE MONITOR: THE CONTROLLER SHALL MONITOR THE DIFFERENTIAL PRESSURE ACROSS INTAKE AND EXHAUST FILTERS. ALARMS SHALL BE PROVIDED AS FOLLOWS: ·
(A) FILTER CHANGE REQUIRED: FILTER DIFFERENTIAL PRESSURE EXCEEDS A USER DEFINABLE LIMIT (ADJ).

SUPPLY AIR TEMPERATURE AND HUMIDITY: THE CONTROLLER SHALL MONITOR THE SUPPLY AIR DISCHARGE TEMPERATURE AND HUMIDITY. ALARMS SHALL BE PROVIDED AS FOLLOWS: ·
(A) HIGH SUPPLY AIR TEMP: IF THE SUPPLY AIR DISCHARGE TEMPERATURE IS GREATER THAN THE SUPPLY AIR SETPOINT BY A USER DEFINABLE AMOUNT (ADJ).
(B) LOW SUPPLY AIR TEMP: IF THE SUPPLY AIR DISCHARGE TEMPERATURE IS LESS THAN THE SUPPLY AIR SETPOINT BY A USER DEFINABLE AMOUNT (ADJ).
(C) HIGH SUPPLY AIR HUMIDITY: IF THE SUPPLY AIR DISCHARGE HUMIDITY IS GREATER THAN THE HUMIDITY SETPOINT BY A USER DEFINABLE AMOUNT (ADJ).

SUPPLY FAN AND EXHAUST FAN: THE SUPPLY FAN AND EXHAUST FAN SERVING THE ERU SHALL RUN ANYTIME THE UNIT IS COMMANDED TO RUN, UNLESS SHUTDOWN ON SAFETIES. ALARMS SHALL BE PROVIDED AS FOLLOWS:
(A) FAN FAILURE: COMMANDED ON, BUT THE STATUS IS OFF.
(B) FAN IN HAND: COMMANDED OFF, BUT THE STATUS IS ON.

SUPPLY AIR DUCT STATIC PRESSURE CONTROL:
THE CONTROLLER SHALL MEASURE DUCT STATIC PRESSURE AND MODULATE THE SUPPLY FAN VFD SPEED TO MAINTAIN A DUCT STATIC PRESSURE SETPOINT. THE SPEED SHALL NOT DROP BELOW 30 HZ (ADJ). THE STATIC PRESSURE SETPOINT SHALL BE RESET BASED UPON THE POSITION OF THE ZONE DAMPERS, WITH A GOAL OF REDUCING THE STATIC PRESSURE UNTIL AT LEAST ONE ZONE DAMPER IS 90% OPEN (ADJ).
THE INITIAL DUCT STATIC PRESSURE SETPOINT SHALL BE 1.5 IN W.C. (ADJ).

IF NO ZONE DAMPER IS 90% OPEN (ADJ), THE STATIC SETPOINT SHALL INCREMENTALLY RESET DOWN UNTIL ONE ZONE DAMPER IS 90% OPEN.

IF ONE OF MORE DAMPER IS 100% OPEN AND BELOW VENTILATION SUPPLY AIR SETPOINT THEN, THE STATIC SETPOINT SHALL INCREMENTALLY RESET UP.

THE EXHAUST FAN VFD SHALL ADJUST PROPORTIONATELY TO MAINTAIN 700 CFM (ADJ) DIFFERENTIAL BETWEEN SUPPLY AND EXHAUST AIRFLOW AS MEASURED BY SUPPLY AND EXHAUST AIRFLOW STATIONS. EXHAUST VAV TERMINAL UNITS VAV-11 AND VAV-12 SHALL MODULATE PROPORTIONATELY TO MAINTAIN CAV-5 AIRFLOW.

ALARMS SHALL BE PROVIDED AS FOLLOWS:
(A) HIGH SUPPLY AIR STATIC PRESSURE: IF THE SUPPLY AIR STATIC PRESSURE IS GREATER THAN THE STATIC PRESSURE SETPOINT BY A USER DEFINABLE AMOUNT.
(B) LOW SUPPLY AIR STATIC PRESSURE: IF THE SUPPLY AIR STATIC PRESSURE IS LESS THAN THE STATIC PRESSURE SETPOINT BY A USER DEFINABLE AMOUNT.

ENERGY RECOVERY WHEEL: ENTHALPY WHEEL ROTATION SHALL BE CONTROLLED BASED ON DEW POINT TEMPERATURE (CALCULATED BASED ON DRY BULB TEMPERATURE AND RELATIVE HUMIDITY).

HIGH OUTDOOR AIR HUMIDITY: IF THE OUTDOOR AIR INTAKE DEW POINT IS GREATER THAN THE WHEEL DISCHARGE DEW POINT SETPOINT OF 55°F (ADJ) , AND GREATER THAN THE EXHAUST AIR DEW POINT THE ENERGY WHEEL SHALL ENERGIZE AND MODULATE ROTATION SPEED TO MAINTAIN WHEEL DISCHARGE DEW POINT SETPOINT.

HIGH EXHAUST AIR HUMIDITY: IF THE OUTDOOR AIR INTAKE DEW POINT IS GREATER THAN 55°F (ADJ) AND LESS THAN THE EXHAUST AIR DEW POINT THEN THE WHEEL SHALL BE OFF.

LOW OUTDOOR AIR HUMIDITY: IF THE OUTDOOR AIR INTAKE DEW POINT IS LESS THAN 55°F (ADJ) THE WHEEL SHALL MODULATE ROTATION SPEED TO MAINTAIN A SUPPLY AIR TEMPERATURE SETPOINT OF 70°F (ADJ), BUT NOT EXCEED A WHEEL DISCHARGE SUPPLY AIR DEW POINT OF 55°F (ADJ)

ALARMS SHALL BE PROVIDED AS FOLLOWS:
(A) ENERGY RECOVERY WHEEL FAILURE: COMMANDED ON, BUT THE STATUS IS OFF.
(B) ENERGY RECOVERY WHEEL IN HAND: COMMANDED OFF, BUT THE STATUS IS ON.

VARIABLE AIR VOLUME UNITS (DEMAND CONTROL VENTILATION):
THE VARIABLE AIR VOLUME (VAV) UNIT SHALL MODULATE THE OUTDOOR AIR FLOW RATE TO MAINTAIN SPACE CO2 LEVELS OF 700 PPM (ADJ) BELOW MEASURED OUTSIDE AIR CO2 LEVELS. WHEN THE SPACE CO2 LEVEL IS BELOW SETPOINT, THE VAV UNIT SHALL PROVIDE THE MINIMUM SETBACK OUTDOOR AIR FLOW RATE AS SCHEDULED IN THE VAV AND CAV TERMINAL BOX SCHEDULE. WHEN THE SPACE CO2 LEVEL RISES ABOVE SETPOINT, THE VAV UNIT SHALL MODULATE TO MAXIMUM OUTDOOR AIR FLOW RATE AS SCHEDULED TO PROVIDE ADDITIONAL OUTSIDE AIR TO THE SPACE.

WHEN THE SPACE CO2 LEVELS ARE LESS THAN 600 PPM (ADJ) BELOW MEASURED OUTSIDE AIR CO2 LEVELS, THE VAV UNIT SHALL MODULATE BACK TO MINIMUM SETBACK OUTDOOR AIR FLOW RATE.

ALARMS SHALL BE PROVIDED AS FOLLOWS:
(A) HIGH CO2 LEVELS: IF SPACE CO2 LEVELS ARE GREATER THAN SPACE CO2 SETPOINT BY AN USER DEFINABLE AMOUNT (ADJ).

COOLING AND DEHUMIDIFICATION STAGE: THE ERU CONTROLLER SHALL MEASURE THE SUPPLY AIR TEMPERATURE AND SHALL MODULATE THE COOLING COIL CONTROL VALVE AND RE-HEAT CONTROL VALVE TO MAINTAIN OCCUPIED SUPPLY AIR SETPOINTS.

WHEN THE ERU LEAVING WHEEL AIR DEW POINT IS GREATER THAN 55°F, THE ERU SHALL COOL THE AIR TO 55°F AND MODULATE THE RE-HEAT CONTROL VALVE TO MAINTAIN OCCUPIED SUPPLY AIR SETPOINTS.

COOLING SHALL BE ENABLED WHENEVER:
(A) THE OUTSIDE AIR TEMPERATURE IS GREATER THAN 70°F (ADJ) OR THE ERU LEAVING WHEEL DEW POINT TEMPERATURE IS GREATER THAN 55°F

HEATING:
THE ERU CONTROLLER SHALL MEASURE THE SUPPLY AIR TEMPERATURE AND SHALL MODULATE THE PRE-HEAT COIL CONTROL VALVE AND RE-HEAT CONTROL VALVE TO MAINTAIN OCCUPIED SUPPLY AIR SETPOINTS.

HEATING SHALL BE ENABLED WHENEVER:
(A) OUTSIDE AIR TEMPERATURE IS LESS THAN 65°F (ADJ).

EMERGENCY AIR DISTRIBUTION SHUTOFF:
PROVIDE EMERGENCY SHUTOFF SWITCH TO IMMEDIATELY SHUT DOWN THE DEDICATED OUTDOOR AIR SYSTEM AND ENERGY RECOVERY UNIT AND MOTORIZED INTAKE AND EXHAUST DAMPERS WITHIN 30 SECONDS. SWITCH SHALL BE TWO ACTION TYPE COVERED PUSH BUTTON TYPE WITH PULL TO RESET. EMERGENCY SHUTOFF SWITCH SHALL BE CAPABLE OF SHUTTING UNITS AND CLOSING DAMPERS REGARDLESS OF THE POSITION OF ANY LOCAL HAND/OFF/AUTO SWITCHES.

LOCATE SHUT OFF SWITCH ADJACENT TO MASS NOTIFICATION SYSTEM LOCAL OPERATING CONSOLE LOCATED IN CORRIDOR.

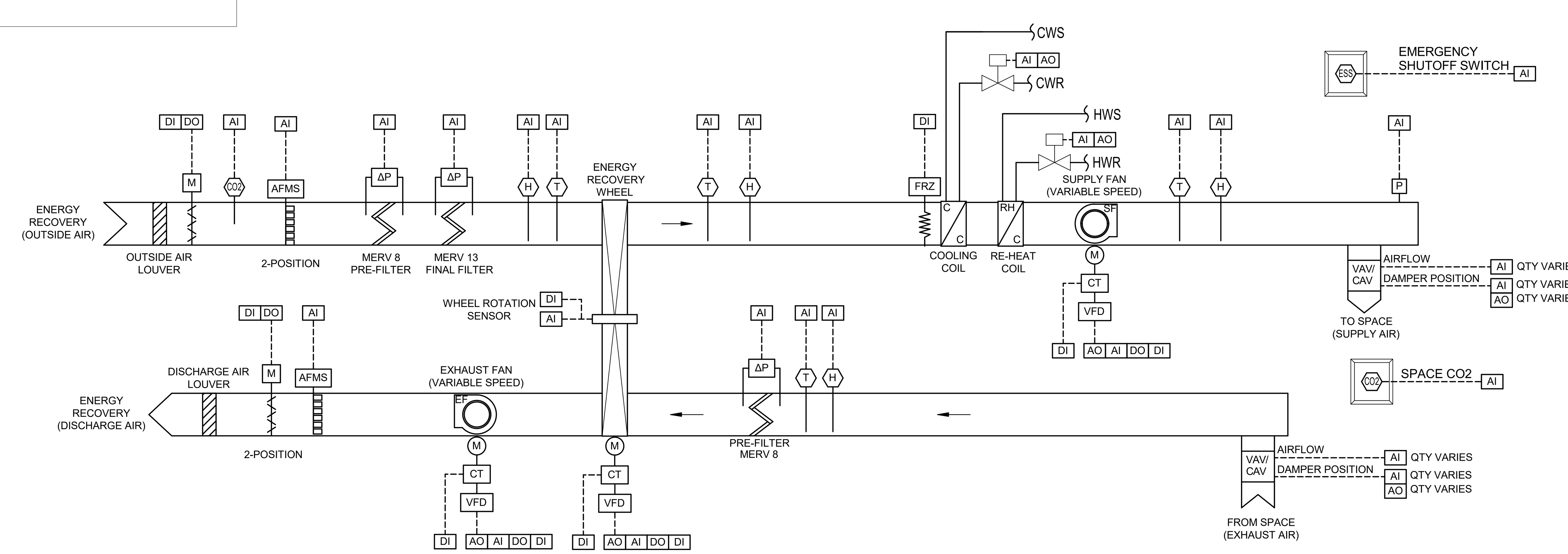

ENERGY RECOVERY UNIT (ERU) SCHEMATIC

NOT TO SCALE

ERU-1

SYM | DESCRIPTION | DATE | APPR

NAVFAC

MARK P. DIMOFF MECHANICAL SEAL 041351 ENGINEER NORTH CAROLINA 06/25/20
SEAL

HDR
440 S. CHURCH STREET, SUITE 1000
CHARLOTTE, NC 28202
TEL (704)338-6700
A/E INFO

APPROVED
James E. Donahue, R.A.
FOR COMMANDER NAVFAC 7/10/2020
ACTIVITY
Approved by Emily Sylvester, Director of Installation Development Division
SATISFACTORY TO DATE 06/19/2020
DES MDD DRW MDD CHK CSW
PM/DM SGL/RMS
BRANCH MANAGER ALG
CHIEF ENG/ARCH EJA
FIRE PROTECTION

DEPARTMENT OF THE NAVY
NAVAL FACILITIES ENGINEERING COMMAND
NAVAL FACILITIES ENGINEERING COMMAND ~ MID-ATLANTIC
CAMP LEJEUNE - JACKSONVILLE, NC
ALG
JACKSONVILLE, NORTH CAROLINA
MARSOC
P1395 MARINE RAIDER HEADQUARTERS
MECHANICAL CONTROLS - ERU

SCALE: AS NOTED
EPROJECT NO.: 1603164
CONSTR. CONTR. NO.
NAVFAC DRAWING NO. 12794391
SHEET 172 OF 228
M-703
DRAWFORM REVISION: 17 APRIL 2018

C:\rvt\2016\10136813-M-CENTRAL_P-1395 MARINE HQ_mark.dimoff.rvt
6/25/2020 3:45:29 PM

FAN COIL UNIT SEQUENCE OF OPERATION

PROVIDE A COMPLETE AND OPERATIONAL SYSTEM WITH ALL COMPONENTS NECESSARY TO PERFORM THE FUNCTIONS REFERRED TO IN THE DESCRIPTIONS HERE.

ALL SETPOINTS SHALL BE OPERATOR ADJ. IN THE EVENT OF COMMUNICATION LOSS, THE UNIT SHALL CONTINUE TO CONTROL TO CURRENT SETPOINTS. THE OCCUPANT SHALL BE ABLE TO ADJUST THE ZONE TEMPERATURE HEATING AND COOLING SETPOINTS AT THE ZONE SENSOR.

HEATING-COOLING SET POINT SHALL BE GLOBAL RESET BASED ON AMBIENT CONDITIONS.

OCCUPANTS SHALL BE ABLE TO ADJUST THE ZONE SET POINT +/- 3F FROM THE GLOBAL SET POINT.

GLOBAL SET POINT SHALL BE 70F AT LESS THAN 50F AMBIENT; AND 76F AT GREATER THAN 80F AMBIENT. BETWEEN 50F AND 80F AMBIENT, THE GLOBAL SET POINT SHALL RESET LINEARLY OR IN NO FEWER THAN 3 STEPS.

A ZONE UNOCCUPIED OVERRIDE SHALL BE PROVIDED FOR FAN COIL UNITS. THE OVERRIDE WILL ALLOW AN OCCUPANT TO OVERRIDE THE SCHEDULE AND PLACE THE UNIT INTO OCCUPIED MODE FOR 1 HOUR (ADJ) DURATION. AT THE EXPIRATION OF THIS TIME, CONTROL OF THE UNIT SHALL AUTOMATICALLY RETURN TO THE SCHEDULE.

THE FAN COIL UNIT SHALL RUN BASED ON A USER DEFINABLE TIME SCHEDULE IN TWO MODES OF OPERATION:
(A) OCCUPIED MODE
(B) UNOCCUPIED (NIGHT SETBACK) MODE

THE INITIAL USER DEFINED SPACE TEMPERATURE SETPOINTS SHALL BE AS FOLLOWS:
OCCUPIED MODE: 75°F (ADJ) COOLING SETPOINT; 70°F (ADJ) HEATING SETPOINT.
UNOCCUPIED MODE: 85°F (ADJ) COOLING SETPOINT; 60°F (ADJ) HEATING SETPOINT.

ZONE OPTIMAL START:
AN ADAPTIVE OPTIMAL START ALGORITHM SHALL BE USED TO MINIMIZE THE ENERGY REQUIRED AND WARM-UP OR COOL-DOWN TIME DURING THE UNOCCUPIED PERIOD, NECESSARY TO ACHIEVE ZONE OCCUPIED TEMPERATURE SETPOINTS BY THE START OF SCHEDULED OCCUPIED PERIOD.

THE LEARNING ADAPTIVE ALGORITHM SHALL COMPARE THE ZONE TEMPERATURE TO ITS SETPOINT AT THE BEGINNING OF SCHEDULED OCCUPIED PERIOD AND SHALL AUTOMATICALLY ADAPT THE HEATING OR COOLING RESPONSE TIME FOR THE NEXT UNOCCUPIED PERIOD. THE INITIAL DEFAULT STARTING TIME REMAINING UNTIL OCCUPANCY SHALL BE 60 MINUTES (ADJ).

VARIABLE SPEED CONTROL:
THE FAN ECM CONTROLLER SHALL BE MODULATED BETWEEN MINIMUM AND MAXIMUM SPEEDS IN PROPORTIONAL RESPONSE TO HEATING AND COOLING REQUIREMENTS.

COOLING MODE:
UPON A RISE IN SPACE TEMPERATURE ABOVE SPACE TEMPERATURE SETPOINT AS SENSED BY THE SPACE TEMPERATURE SENSOR, WITH MAIN COOLING SYSTEM IN OPERATION, THE FAN COIL UNIT SUPPLY FAN SHALL ENERGIZE, AND AFTER THE FAN IS ENERGIZED, THE CHILLED WATER CONTROL VALVE SHALL OPEN. THE FAN SPEED SHALL VARY TO MAINTAIN THE SPACE COOLING SETPOINT.

FAN COIL UNIT SHALL CYCLE TO MAINTAIN SPACE COOLING SETPOINT.

HEATING MODE:
UPON A FALL IN SPACE TEMPERATURE BELOW SPACE TEMPERATURE SETPOINT (ADJ) AS SENSED BY THE SPACE TEMPERATURE SENSOR, WITH MAIN HEATING SYSTEM IN OPERATION, THE FAN COIL UNIT SUPPLY FAN SHALL ENERGIZE, AND AFTER THE FAN IS ENERGIZED, THE HEATING WATER CONTROL VALVE SHALL OPEN. THE FAN SPEED SHALL VARY TO MAINTAIN THE SPACE HEATING SETPOINT.

FAN COIL UNIT SHALL CYCLE TO MAINTAIN SPACE HEATING SETPOINT.

EMERGENCY SHUTDOWN:
SUPPLY FAN SHALL BE HARDWIRED WITH CONDENSATE FLOAT SWITCH. SUPPLY FAN SHALL SHUT DOWN AND ALARM SENT TO THE BAS UPON HIGH CONDENSATE LEVEL DETECTION IN THE UNIT DRAIN PAN. DEVICE SHALL BE PER UL 508. UPON FAILURE, THE FAN COIL UNIT FAN SHALL DE-ENERGIZE AND THE CHILLED WATER AND HEATING WATER CONTROL VALVES SHALL CLOSE.

ALARMS:
AN ALARM SHALL BE SENT TO THE BAS FOR THE FOLLOWING CONDITIONS:
(A) FCU FAILS DURING OPERATION OR FAILS TO ENERGIZE
(B) SPACE TEMPERATURE SETPOINTS ARE NOT MAINTAINED AFTER FCU HAS BEEN OPERATING FOR A DURATION OF 2 HOURS (ADJ)
(C) CONDENSATE DRAIN FAILURE.

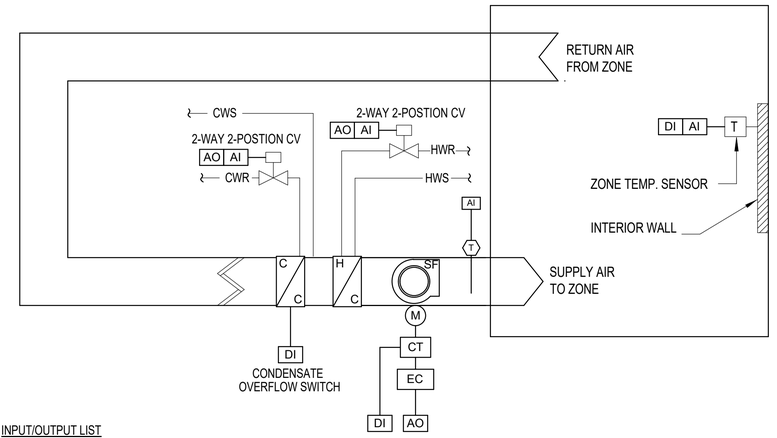

INPUT/OUTPUT LIST

	HARDWARE POINTS				SOFTWARE POINTS					
Point Name	AI	AO	DI	DO	AV	DV	TREND	ALARM	NORMAL / FAIL POSITION	SHOW ON GRAPHIC
TEMPERATURE - SUPPLY AIR	X						X			X
TEMPERATURE - ZONE	X						X			X
COOLING COIL VALVE	X	X					X		C / L	X
HEATING COIL VALVE	X	X					X		C / L	X
SUPPLY FAN EC SPEED		X					X			X
CONDENSATE OVERFLOW			X					X		X
OVERRIDE			X				X			X
SUPPLY FAN STATUS			X					X		X
HIGH ZONE TEMP								X		
LOW ZONE TEMP								X		
TOTALS	**4**	**3**	**3**	**0**	**0**	**0**	**6**	**4**		**8**
			TOTAL HARDWARE:	10			TOTAL SOFTWARE:	10		

NOTES:
NORMAL / FAIL POSTION: C- CLOSED L - LAST

FAN COIL UNIT CONTROL DIAGRAM

NO SCALE

SYM	DESCRIPTION	DATE	APPR

A/E INFO

APPROVED
FOR COMMANDER NAVFAC 7/16/2020
ACTIVITY
Approved by Emily Sylvester, Director of Installation Development Division
SATISFACTORY TO DATE 06/19/2020

DES	MDD	DRW	MDD	CHK	CSW
PM/DM	SGL/RMS				
BRANCH MANAGER	ALG				
CHIEF ENGR/ARCH	EJA				
FIRE PROTECTION					

HDR
440 S. CHURCH STREET, SUITE 1000
CHARLOTTE, NC 28202
TEL (704)338-6700

NAVFAC

MARK D. DIMOFF MECHANICAL SEAL 041351 ENGINEER NORTH CAROLINA 06/25/20 SEAL

DEPARTMENT OF THE NAVY
NAVAL FACILITIES ENGINEERING COMMAND ~ MID-ATLANTIC
NAVAL FACILITIES ENGINEERING COMMAND
CAMP LEJEUNE · JACKSONVILLE, NC
ALG
MARSOC
JACKSONVILLE, NORTH CAROLINA
P1395 MARINE RAIDER HEADQUARTERS
MECHANICAL CONTROLS - FCU

SCALE: AS NOTED
EPROJECT NO.: 1603164
CONSTR. CONTR. NO.
NAVFAC DRAWING NO. 12794392
SHEET 173 OF 228
M-704
DRAWFORM REVISION: 17 APRIL 2018

C:\n\420\16\1038813\ACENTRAL_P-1395 MARINE HQ_mark.dimoff.rvt
6/25/2020 3:46:30 PM

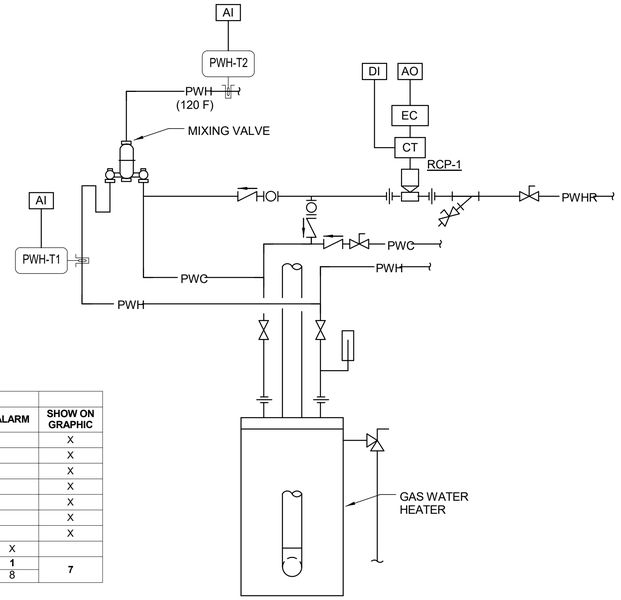

INPUT/OUTPUT LIST

Point Name	HARDWARE POINTS AI	AO	DI	DO	SOFTWARE POINTS AV	DV	TREND	ALARM	SHOW ON GRAPHIC
BUILDING POWER USAGE (KWH)	X						X		X
BUILDING POTABLE WATER COLD WATER USAGE	X						X		X
BUILDING PROPANE USAGE	X						X		X
POTABLE HOT WATER SUPPLY TEMPERATURE - WATER HEATER	X						X		X
POTABLE HOT WATER SUPPLY TEMPERATURE - MIXED TEMP	X						X		X
POTABLE WATER RECIRCULATION PUMP START/STOP		X					X		X
POTABLE WATER RECIRCULATION PUMP STATUS			X				X		X
SUMP PUMP ALARM			X					X	
TOTALS	**5**	**1**	**2**	**0**	**0**	**0**	**7**	**1**	**7**
TOTAL HARDWARE:				8	TOTAL SOFTWARE:			8	

DOMESTIC POTABLE HOT WATER RECIRCULATING PUMP:

RECIRCULATING PUMP SHALL RUN CONTINUOUSLY WHENEVER BUILDING IS OCCUPIED.

RECIRCULATING PUMP SHALL BE OFF WHEN BUILDING IS UNOCCUPIED.

BUILDING SHALL BE NORMALLY OCCUPIED. UNOCCUPIED MODE SHALL BE MANUALLY CONTROLLED THROUGH BAS.

BUILDING UTILITIES

NO SCALE

DX DUCTLESS SPLIT SYSTEM SEQUENCE OF OPERATION

THE DX SPLIT SYSTEM SHALL BE CONTROLLED BY FACTORY PROVIDED CONTROLS.

THE DX SPLIT SYSTEM SHALL RUN WHENEVER:
(A)THERE IS A CALL FOR ZONE COOLING OR HEATING (HEAT PUMP UNITS).

UPON A RISE IN SPACE TEMPERATURE THE REFRIGERANT COOLING CYCLE SHALL BE ENABLED AND THE COMPRESSOR SHALL CYCLE TO MAINTAIN SPACE TEMPERATURES, 78°F (ADJ)

UPON A FALL IN SPACE TEMPERATURE THE REFRIGERANT HEAT PUMP CYCLE SHALL BE ENABLED AND THE COMPRESSOR SHALL CYCLE TO MAINTAIN SPACE TEMPERATURES, 65°F (ADJ)

THE CONTROLLER SHALL MONITOR THE SPACE TEMPERATURE. ALARMS SHALL BE PROVIDED AS FOLLOWS:
(A)HIGH SPACE TEMP: IF THE SPACE TEMPERATURE IS GREATER THAN THE COOLING SETPOINT BY A USER DEFINABLE AMOUNT (ADJ).
(B) LOW SPACE TEMP: IF THE SPACE TEMPERATURE IS LESS THAN THE HEATING SETPOINT BY A USER DEFINABLE AMOUNT (ADJ).
(C) UNIT ERROR

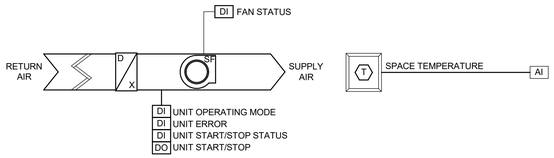

INPUT/OUTPUT LIST

Point Name	HARDWARE POINTS AI	AO	DI	DO	SOFTWARE POINTS AV	DV	TREND	ALARM	SHOW ON GRAPHIC
SPACE TEMP	X						X		X
SPACE SETPOINT ADJUST		X					X		X
SUPPLY FAN MOTOR STATUS			X				X		X
UNIT OPERATING MODE			X				X		X
UNIT ERROR STATUS			X					X	
UNIT START/STOP STATUS			X				X		X
UNIT START/STOP				X			X		X
SPACE SETPOINT					X		X		X
HIGH SPACE TEMP								X	
UNIT ERROR								X	
TOTALS	**1**	**1**	**4**	**1**	**1**	**0**	**7**	**3**	**7**
TOTAL HARDWARE:				7	TOTAL SOFTWARE:			11	

DX DUCTLESS SPLIT SYSTEM CONTROL DIAGRAM

NO SCALE

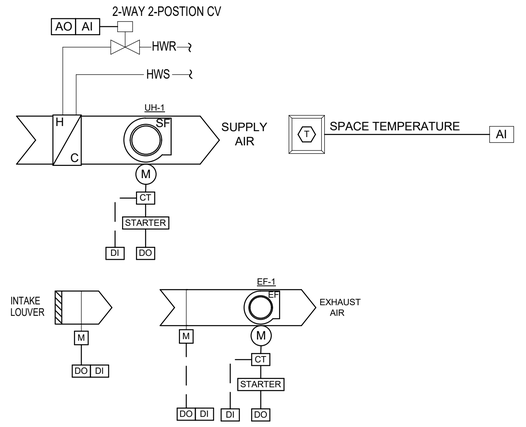

HYDRONIC UNIT HEATER

HYDRONIC UNIT HEATERS SHALL BE BAS CONTROLLED.

UPON A FALL IN SPACE TEMPERATURE BELOW HEATING SETPOINT 55°F (ADJ), THE HEATING WATER CONTROL VALVE SHALL OPEN TO ALLOW HEATING WATER FLOW. THE HYDRONIC UNIT HEATER FAN SHALL CYCLE TO MAINTAIN SPACE HEATING SETPOINT.

UPON A RISE IN SPACE TEMPERATURE ABOVE COOLING SETPOINT 85°F (ADJ), THE EXHAUST FAN MOTORIZED DAMPER AND INTAKE DAMPER SHALL OPEN AND EXHAUST FAN SHALL ENERGIZE.

AN ALARM SHALL BE SENT TO THE BAS FOR THE FOLLOWING CONDITIONS:
(A) EXHAUST FAN FAILURE
(B) SPACE LOW TEMPERATURE
(C) UNIT HEATER FAILURE

INPUT/OUTPUT LIST

Point Name	HARDWARE POINTS AI	AO	DI	DO	SOFTWARE POINTS AV	DV	TREND	ALARM	NORMAL / FAIL POSITION	SHOW ON GRAPHIC
SPACE TEMPERATURE	X						X			X
EXHAUST FAN STATUS			X				X			X
EXHAUST FAN START/STOP				X						
EXHAUST FAN MOTORIZED DAMPER			X	X					C / L	
INTAKE LOUVER MOTORIZED DAMPER			X	X					C / L	
UNIT HEATER FAN STATUS (QTY 2)			X							
UNIT HEATER FAN START/STOP (QTY 2)				X						
EXHAUST FAN FAILURE								X		
SPACE LOW TEMPERATURE								X		
UNIT HEATER FAN FAILURE								X		
TOTALS	**1**	**0**	**4**	**4**	**0**	**0**	**2**	**3**		**2**
TOTAL HARDWARE:				9	TOTAL SOFTWARE:			5		

NOTES:
NORMAL / FAIL POSTION: O - OPEN C- CLOSED L- LAST POSITION

MECHANICAL ROOM VENTILATION AND HYDRONIC UNIT HEATER

NO SCALE

SYM	DESCRIPTION	DATE	APPR

NAVFAC

MARK D. DIMOFF MECHANICAL SEAL 041351 ENGINEER NORTH CAROLINA 06 | 25 | 20 SEAL

HDR
440 S. CHURCH STREET, SUITE 1000
CHARLOTTE, NC 28202
TEL (704)338-6700
A/E INFO

APPROVED
FOR COMMANDER NAVFAC 7/10/2020
ACTIVITY
Approved by Emily Sylvester, Director of Installation Development Division
SATISFACTORY TO DATE 06/19/2020
DES MDD DRW BNR CHK CSW
PM/DM SGL/RMS
BRANCH MANAGER ALG
CHIEF ENG/ARCH EJA
FIRE PROTECTION

DEPARTMENT OF THE NAVY
NAVAL FACILITIES ENGINEERING COMMAND ~ MID-ATLANTIC
NAVAL FACILITIES ENGINEERING COMMAND
CAMP LEJEUNE · JACKSONVILLE, NC
ALG MARSOC
JACKSONVILLE, NORTH CAROLINA
P1395 MARINE RAIDER HEADQUARTERS
MECHANICAL CONTROLS : MISC

SCALE: AS NOTED
EPROJECT NO.: 1603164
CONSTR. CONTR. NO.
NAVFAC DRAWING NO. 12794393
SHEET 174 OF 228
M-705
DRAWFORM REVISION: 17 APRIL 2018

C:\hr\f2018\01368\3-M-CENTRAL_P-1395 MARINE HQ_mark.dimoff.rvt
6/25/2020 3:45:30 PM

ELECTRICAL LEGEND

GENERAL

- # — NEW WORK NOTE - REFER TO "NEW WORK KEYNOTES" FOR EACH SHEET
- # — SPECIALTY NOTE - REFER TO "LIGHTING CONTROL STRATEGY SCHEDULE MARK " ON SHEET EL601
- #. — GENERAL NOTE - REFER TO "GENERAL NOTES" FOR EACH SHEET
- OBJECTS ON DRAWINGS AT THIS LINEWEIGHT ARE CATEGORIZED AS NEW OR PROPOSED FOR CONSTRUCTION, UON.

LIGHTING

- XX — LUMINAIRE TYPE. SEE LUMINAIRE SCHEDULE, SHEET EL601.
- LED LUMINAIRE. (⊣ INDICATES BRACKET, WALL MOUNTED FIXTURES.)
- LED EMERGENCY LUMINAIRE. (⊣ INDICATES BRACKET, WALL MOUNTED FIXTURES.)
- LED LUMINAIRE. (⊣ INDICATES BRACKET, WALL MOUNTED FIXTURES.)
- EXIT LUMINAIRE. ARROW, WHEN USED, INDICATES DIRECTION. (⊣ INDICATES BRACKET, WALL MOUNTED FIXTURES.) FILLED IN QUADRANT(s) OF SYMBOL INDICATES NUMBER AND ORIENTATION OF ILLUMINATED FACES.
- EMERGENCY BATTERY POWERED LIGHTING UNIT.
- Sa — TOGGLE SWITCH, 20 A, 120/277 V. MOUNT 48" AFF UON. SUBSCRIPT INDICATES SWITCH CONTROL.
- S# — TOGGLE SWITCH, 20 A, 120/277 V. MOUNT 48" AFF UON. SUBSCRIPT "3" = 3 WAY, "4" = 4 WAY.
- SD — DIMMER SWITCH. (WATTAGE AS REQUIRED TO CONTROL THE FIXTURE(S) CONNECTED UON.) MOUNT 48" AFF UON.
- SOS — OCCUPANCY SENSOR CONTROLLER WALL MOUNTED 48" AFF UON.
- (OS) — OCCUPANCY SENSOR, CEILING MOUNTED UON.
- [TS] — TIME SWITCH
- (DS) — DAYLIGHT SENSOR, CEILING MOUNTED UON.

AUDIO/VISUAL

- (S) — BACKBOX FOR CEILING MOUNTED AV SPEAKER. COORDINATE ROUGH-IN LOCATIONS WITH AV INSTALLER PRIOR TO ROUGH-IN.

POWER

- 20A, 120V DUPLEX CONVENIENCE RECEPTACLE. MOUNT 18" AFF UON. 'GFI' DENOTES INTERNAL GROUND FAULT INTERRUPTER, 'WP' DENOTES WEATHER PROOF "WHILE IN USE" ENCLOSURE AND 'C' DENOTES FLUSH MOUNTED IN CEILING. 'TV' DENOTES OUTLET FOR CATV CONNECTION, MOUNT 60" AFF UON. SUBSCRIPT "AR" INDICATES AUTOMATIC CONTROLLED RECEPTACLE.
- 20A, 120V DUPLEX GFI CONVENIENCE RECEPTACLE. MOUNT 18" AFF UON. 'WP' DENOTES WEATHER PROOF "WHILE IN USE" ENCLOSURE.
- 20A, 120V DUPLEX GFI CONVENIENCE RECEPTACLE. MOUNT 6" ABOVE COUNTER UON.
- QUADRUPLEX CONVENIENCE RECEPTACLE MOUNTED IN TWO-GANG OUTLET BOX - EACH RATED 20A, 125 VOLTS WITH SINGLE COVER PLATE, MOUNT 18" AFF, UON. 'C' DENOTES CEILING MOUNTED. SUBSCRIPT "AR" INDICATES AUTOMATIC CONTROLLED RECEPTACLE.
- QUADRUPLEX GFI CONVENIENCE RECEPTACLE MOUNTED IN TWO-GANG OUTLET BOX - EACH RATED 20A, 125 VOLTS WITH SINGLE COVER PLATE, MOUNT 18" AFF, UON. 'WP' DENOTES WEATHER PROOF "WHILE IN USE" ENCLOSURE.
- 15A, 120V FLUSH FLOOR DUPLEX RECEPTACLE.
- SPECIAL PURPOSE RECEPTACLE. NEMA 14-20R, RATED 20A, 125/250V, UON. 'C' DENOTES CEILING MOUNTED.
- (J) — JUNCTION BOX. MINIMUM 4" SQUARE X 2 1/8" / SIZE PER NEC. SUBSCRIPT "AR" INDICATES AUTOMATIC RECEPTACLE CONTROL REPLAY MODULE.
- [J] — SYSTEMS FURNITURE CONNECTION.
- [ACS] — ACCESS CONTROL SYSTEM POWER ENCLOSURE. REFER TO SHEET EY501 FOR ADDITIONAL DETAIL.

EQUIPMENT CONNECTIONS

- (E) — EQUIPMENT CONNECTION
- (M) — MOTOR CONNECTION. HP AS INDICATED.
- SM — MOTOR RATED SWITCH OR MANUAL MOTOR STARTER WITH OVERLOADS.
- ⊠ — MAGNETIC MOTOR STARTER
- ⧅ — MANUAL MOTOR STARTER
- ▢ — DISCONNECT SWITCH. 208V IN NEMA 1 ENCL. UON.
- ◪ — DISCONNECT SWITCH PROVIDED INTEGRAL WITH EQUIPMENT
- [VFD] — VARIABLE FREQUENCY DRIVE

WIRE, CONDUIT, AND RACEWAY

- BRANCH CIRCUIT OR FEEDER WIRING IN CONDUIT. WITH 2-#12 CONDUCTORS & 1-#12 GND. IN 1/2" CONDUIT UON. CONDUIT LARGER THAN 1/2" & WIRE LARGER THAN #12 SHALL BE INDICATED.
- L2A-1,3 — HOMERUN TO PANEL. PANEL & CIRCUIT DESIGNATIONS AS INDICATED.
- CONDUIT TURNED UP
- CONDUIT TURNED DOWN

DISTRIBUTION

- 208Y/120V PANELBOARD.
- 480Y/277V PANELBOARD.
- [T] — DRY-TYPE TRANSFORMER. 'T' DENOTES TRANSFORMER IDENTIFICATION

LIGHTNING PROTECTION

- DRIVEN GROUND ROD. "T" INDICATES GROUND ROD TEST AND INSPECTION POCKET.
- AIR TERMINAL
- BOND CONNECTION EXOTHERMICALLY WELD, UON.
- G—G — GROUND CONDUCTOR - DESCRIPTION AS INDICATED.
- M—M — MAIN LIGHTNING CONDUCTOR - DESCRIPTION AS INDICATED.
- B—B — BONDING CONDUCTOR - DESCRIPTION AS INDICATED.
- D—D — DOWN CONDUCTOR - DESCRIPTION AS INDICATED.

SITE

- MANHOLE
- HANDHOLE
- LIGHTING POLE WITH LUMINAIRE AND INTEGRAL PHOTOCELL
- PAD MOUNTED TRANSFORMER. 'T' DENOTES TRANSFORMER IDENTIFICATION
  - HEAVY LINE INDICATES FRONT OF TRANSFORMER
- UC — UNDERGROUND COMMUNICATION CONCRETE ENCASED CONDUIT.
- UP — UNDERGROUND PRIMARY CONCRETE ENCASED IN DUCTBANK.
- US — UNDERGROUND SECONDARY CONCRETE ENCASED IN DUCTBANK.

ABBREVIATIONS

1/C	ONE CONDUCTOR
A	AMPERAGE OR AMPS
AFF	ABOVE FINISHED FLOOR
AHU	AIR HANDLING UNIT
AR	AUTOMATIC RECEPTACLE CONTROL
ARF	ABOVE RAISED FLOOR
BH	BASEBOARD HEATER
BKR	BREAKER
C	CONDUIT
CB	CIRCUIT BREAKER
CKT	CIRCUIT
DWG	DRAWING
EA	EACH
EC	EMPTY CONDUIT
ELEC	ELECTRICAL
EMT	ELECTRICAL METALLIC TUBING
ENCL	ENCLOSURE
EQUIP	EQUIPMENT
EWC	ELECTRIC WATER COOLER
EWH	ELECTRIC WATER HEATER
EXIST	EXISTING
EXP	EXPLOSION PROOF EQUIPMENT
FCU	FAN COIL UNIT
FT	FEET
GFCI	GOVERNMENT FURNISHED CONTRACTOR INSTALLED
GFE	GOVERNMENT FURNISHED EQUIPMENT
GFGI	GOVERNMENT FURNISHED GOVERNMENT INSTALLED
GFI	GROUND FAULT INTERRUPTER
GND	GROUND
HGT	HEIGHT
HP	HORSEPOWER
LED	LIGHT EMITTING DIODE
LTS	LUMINAIRE
M	CEILING MOUNTED MICROPHONE
MCB	MAIN CIRCUIT BREAKER
MDP	MAIN DISTRIBUTION PANEL
MECH	MECHANICAL
MLO	MAIN LUGS ONLY
MTD	MOUNTED
MTG HT	MOUNTING HEIGHT
NEC	NATIONAL ELECTRICAL CODE
NF	NON FUSIBLE
NIC	NOT IN CONTRACT
NTS	NOT TO SCALE
OS	OCCUPANCY SENSOR
PNL	PANEL
PNLBD	PANELBOARD
PVC	POLYVINYL CHLORIDE CONDUIT
QU	QUANTITY
REC	RECEPTACLE
REQ'D	REQUIRED
RGS	RIGID GALVANIZED STEEL
RM	ROOM
SHT	SHEET
SWBD	SWITCHBOARD
TYP	TYPICAL
UON	UNLESS OTHERWISE NOTED
V	VOLTAGE OR VOLTS
W	WIRE
WP	WEATHERPROOF
X	IN SCHEDULES, ITEM NOT APPLICABLE
XFMR	TRANSFORMER
Ø	PHASE

GENERAL NOTES

1. ALL ELECTRICAL WORK AND MATERIAL IS NEW AND SHALL BE PROVIDED BY THE CONTRACTOR UNLESS OTHERWISE NOTED.
2. AN EQUIPMENT GROUND WIRE SHALL BE RUN WITH FEEDERS AND BRANCH CIRCUITS.
3. WIRING SHALL BE AS PER NATIONAL ELECTRICAL CODE (NEC).
4. ELECTRICAL EQUIPMENT SHALL BE IDENTIFIED AND LABELED.
5. FEEDERS/CIRCUITS SHALL BE IDENTIFIED AT EACH END OF THE WIRE AND AT EVERY SPLICE OR JUNCTION/PULL BOX.
6. PROVIDE NAMEPLATES ON THE EXTERIOR OF ELECTRICAL PANELS AND ENCLOSURES AS FOLLOWS:

PANEL LP1A 100A, 208Y/120V-30, 4W FEEDS FROM PANEL MDP INSTALLED 2020 DRAWING NO. 15,350,896	DEVICE ID DEVICE RATING POWER SOURCE INSTALLATION DATE NAVFAC DRAWING NUMBER

   FOR DISCONNECT SWITCHES AND MOTOR STARTERS, THE TOP LINE SHALL BE THE NAME/DESIGNATION OF EQUIPMENT BEING FED BY SAME.
7. PROVIDE NEW TYPED DIRECTORIES FOR PANELS INCLUDED IN THIS PROJECT.
8. INTERIOR WIRING SYSTEMS SHALL BE CONCEALED WITH FLUSH MOUNTED BOXES/DEVICES, UON.
9. COORDINATE LOCATION AND POWER REQUIREMENTS OF ELECTRICAL DEVICES WITH MECHANICAL, PLUMBING, ARCHITECTURAL , AUDIO/VISUAL AND FIRE PROTECTION DRAWINGS.
10. PROVIDE ARC-FLASH LABELS ON ALL PANELS/DISCONNECT SWITCHES AS PER UFC 3-560-01 AND NFPA 70E. SEE DETAIL PLATE ON SHEET EP502.
11. SINGLE PHASE (120/208V) BRANCH CIRCUITS SHALL CONSIST OF 2#12 & 1#12 GND, UON. THREE PHASE BRANCH CIRCUITS CONSIST OF 3#12 & 1#12 GND, UON.
12. REFER TO PLANS FOR CONDUCTOR SIZING. COMPLY WITH THE FOLLOWING GUIDELINES FOR CONDUCTOR RUN LENGTHS:

    20A,120V CIRCUITS LONGER THAN 100' - USE #10 AWG TO LIMIT VOLTAGE DROP ON BRANCH CIRCUITS TO 3%

    20A, 120V CIRCUITS LONGER THAN 150' - USE #8 AWG TO LIMIT VOLTAGE DROP ON BRANCH CIRCUITS TO 3%

    20A, 277V CIRCUITS LONGER THAN 150' - USE #10 AWG TO LIMIT VOLTAGE DROP ON BRANCH CIRCUITS TO 3%
13. COORDINATE ELECTRICAL WORK WITH ARCHITECTURAL, MECHANICAL AND FIRE PROTECTION WORK PRIOR TO FABRICATION AND INSTALLATION TO PREVENT CONFLICTS. NOTIFY CONTRACTING OFFICER WHERE CONFLICTS ARE DISCOVERED PRIOR TO CONSTRUCTION AND BEFORE BEGINNING WORK IN THOSE AREAS. ALL CONFLICTS THAT ARISE DUE TO LACK OF COORDINATION SHALL BE RECTIFIED BY THE CONTRACTOR AT NO COST TO THE GOVERNMENT.

CONSTRUCTION NOTES

1. CONTRACTOR SHALL PROVIDE A MINIMUM OF 2 WEEKS NOTICE OF POWER OUTAGES TO ACTIVITY AND GOVERNMENT OFFICIAL.

APPR | DATE | DESCRIPTION | SYM

NAVFAC

NORTH CAROLINA PROFESSIONAL SEAL 037183 ENGINEER EDWARD CHINNIS, JR. 6/25/2020

HDR
440 S. CHURCH STREET, SUITE 1000
CHARLOTTE, NC 28202
TEL (704)338-6700

A/E INFO

APPROVED
FOR COMMANDER NAVFAC 7/10/2020
ACTIVITY
Approved by Emily Sylvester, Director of Installation Development Division
SATISFACTORY TO DATE 06/19/2020
DES EC | DRW DJF | CHK EC
PMDM SGL/RMS
BRANCH MANAGER JAS
CHIEF ENG/ARCH EJA
FIRE PROTECTION

DEPARTMENT OF THE NAVY
NAVAL FACILITIES ENGINEERING COMMAND
MIDLANT CI COPE: MARSOC
NAVAL FACILITIES ENGINEERING COMMAND ~ MID-ATLANTIC
CAMP LEJEUNE - JACKSONVILLE, NC
JACKSONVILLE, NORTH CAROLINA
P1395 MARINE RAIDER HEADQUARTERS
LEGEND, ABBREVIATIONS AND GENERAL NOTES

SCALE: AS NOTED
EPROJECT NO.: 1603164
CONSTR. CONTR. NO.
NAVFAC DRAWING NO. 12794394
SHEET 175 OF 228

E-001

DRAWFORM REVISION: 17 APRIL 2018

C:\e20161101\36913-E-CENTRAL_P-1395 MARINE HQ_jaremy.forrest.rvt
6/25/2020 8:27:38 AM

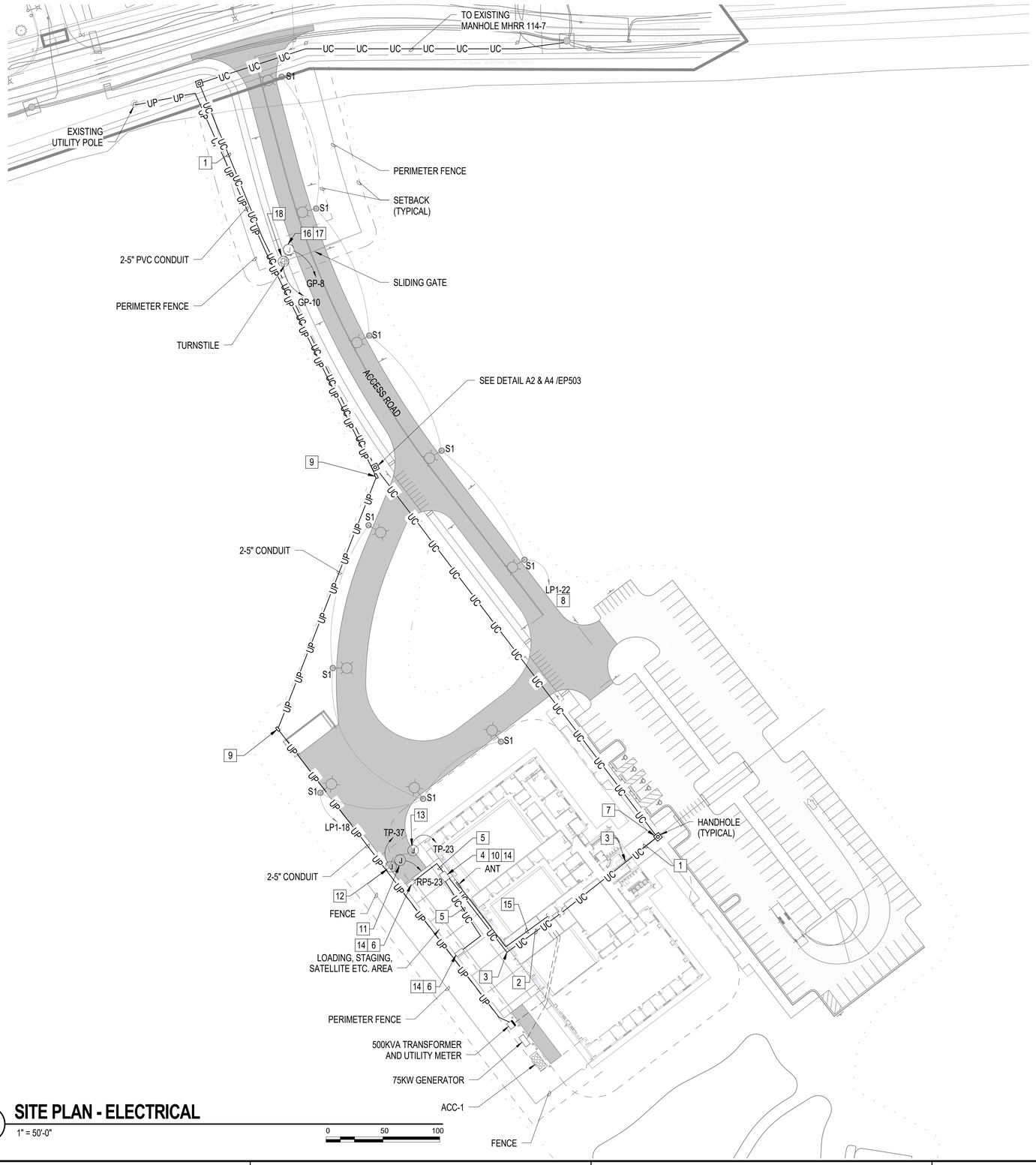

A1 SITE PLAN - ELECTRICAL

1" = 50'-0"

0 50 100

GENERAL NOTES

1. FIELD VERIFY NEMA 4X NOTE THAT EACH ENCLOSURE REQUIRE AN 'END USER'S EQUIPMENT CABLING PENETRATION TO BE COORDINATED BETWEEN USMC AND THE ELECTRICAL CONTRACTOR BEFORE FINAL INSTALLATION. COORDINATE ENCLOSURE LOCATIONS WITH OWNER PRIOR TO INSTALLATION.
2. NEMA 4X TELECOMMUNICATION ENCLOSURES TO BE MOUNTED AT 48" AFG.
3. COORDINATE ALL UNDERGROUND STRUCTURES AND UTILITIES PRIOR TO BEGINNING WORK.
4. COMMUNICATION CONDUIT BENDS SHALL BE SWEEPS WITH A MINIMUM RADIUS OF TEN TIMES THE INTERNAL DIAMETER.
5. NO SECTION OF COMMUNICATION CONDUIT SHALL CONTAIN NO MORE THAN TWO 90 DEGREE BENDS OR EQUIVALENT BETWEEN PULL POINTS.
6. INSTALL MAINTENANCE HOLES WHERE CONDUIT SECTION LENGTH EXCEEDS 400FT.
7. DUCTS TO BE SEALED TO RESIST LIQUID AND GAS INFILTRATION AT BOTH ENDS AND CLEARLY MARKED ON OUTSIDE END.
8. UNDERGROUND CONDUITS TO BE INSTALLED SO THAT A SLOPE EXIST AT ALL POINTS OF THE RUN TO ALLOW DRAINAGE AND PREVENT ACCUMULATION OF WATER. SLOPE SLEEVES DOWNWARD 0.125IN/FT AWAY FROM BUILDING.
9. UPON ENTERING THE BUILDING TERMINATE ALL OSP COPPER CABLES ON THE PROTECTED ENTRANCE TERMINAL (PET).
10. ALL COPPER AND FIBER TELECOMMUNICATION CABLES SHOWN ON THIS SHEET ARE TO BE OSP RATED.
11. PROVIDE A MINIMUM COMMUNICATION HANDHOLE SIZE OF 4'x4'x4', AND COMMUNICATION MAINTENANCE HOLE SIZE OF 6'x7'x8'. PROVIDE HANDHOLES WITH ROUND LIDS AND OPEN BOTTOM.
12. UNDERGROUND PORTION SHALL BE ENCASED IN MINIMUM OF 3" OF CONCRETE EXTENDING FROM THE BUILDING ENTRANCE TO OSP DEMARCATION POINT.

ELECTRICAL KEYNOTES

1 ROUTE FOUR 4" CONDUITS BELOW GRADE FROM COMM ROOM TO EXISTING UTILITY MANHOLE AT EVERETTE CREEK RD. FOR CONNECTION DEMARK. INSTALL TWO 3-CELL FABRIC INNER DUCTS IN EACH CONDUIT THAT CONTAIN FIBER CABLES. INSTALL A PULL WIRE INSIDE EACH OF THE INNERDUCTS. REFER TO COMMUNICATIONS RISER DIAGRAM FOR ADDITIONAL INFORMATION. ROUTE ONE SET OF 48 STRANDS OF SINGLEMODE FIBER OPTIC CABLE IN ONE CONDUIT, AND 100 PAIR OF COPPER CABLES IN ANOTHER CONDUIT.

2 ROUTE ONE SET OF 36 STRANDS OF SINGLEMODE FIBER OPTIC CABLE, AND 50 PAIR OF COPPER CABLES BELOW GRADE IN 4" CONDUIT FROM COMM ROOM 107 TO NETWORK SWITCH AT ANTENNA PAD. INSTALL TWO 3-CELL FABRIC INNERDUCTS WITHIN THE CONDUIT. INSTALL A PULL WIRE INSIDE EACH OF THE INNERDUCTS. SEE TELECOMMUNICATION RISER DIAGRAM FOR ADDITIONAL INFORMATION.

3 EXCAVATION NEAR BUILDING TO BE PERFORMED WITH HAND TOOLS OR NON-DESTRUCTIVE TOOLS UNTIL THE FACILITY IS EXPOSED, OR MAXIMUM DEPTH OF THE INTENDED EXCAVATION IS REACHED.

4 PROVIDE NEMA 4X CABINET FOR 12 PORT NETWORK SWITCH. CABINET TO BE SUPPLIED WITH AN INTEGRAL HANDLE, FOR PHYSICAL LOCKING CAPABILITY, AND MUST BE KEYED FOR TYPICAL CAMP LEJEUNE USMC APPLICATION COPPER CABLES TO TERMINATE ON KRONE BLOCK AND LIGHTNING PROTECTOR TO PROVIDE DIAL TONE. COPPER CABLES TO BE TERMINATED ON RJ45 PATCH PANEL WITHIN NEMA 4X CABINET. FIBER CABLE TO TERMINATE ON SC TYPE CONNECTORS IN A RACK MOUNTABLE (PCH FDP). NETWORK SWITCH TO BE GOVERNMENT FURNISHED GOVERNMENT INSTALL. REFER TO "EQUIPMENT MOUNTING STRUCTURE" DETAIL ON SHEET EP502.

5 ROUTE SIX CATEGORY 6 (CAT6) OUTDOOR RATED WATER BLOCK CABLES IN 1-1/2" CONDUIT BELOW GRADE TO NEMA 4X ENCLOSURE NOTED IN KEYNOTE 6.

6 PROVIDE NEMA 4X CABINET FOR TERMINATION OF CAT6 CABLES. CABINET TO BE SUPPLIED WITH AN INTEGRAL HANDLE, FOR PHYSICAL LOCKING CAPABILITY, AND MUST BE KEYED FOR TYPICAL CAMP LEJEUNE USMC APPLICATION CABLES TO BE TERMINATED PER BASE TELECOMMUNICATIONS STANDARDS. CABINETS MUST HAVE WEATHERPROOF "WHILE-IN-USE" PATHWAYS FOR USER CABLING SO CABLING CAN FEED GOVERNMENT EQUIPMENT WITH CABINET CLOSED. REFER TO "EQUIPMENT MOUNTING STRUCTURE" DETAIL ON SHEET EP502.

7 LOCATE NOTED TELECOMMUNICATION HANDHOLE A MINIMUM OF 6' FROM BUILDING ENTRANCE.

8 SITE LUMINAIRES NOT APART OF THE BASE BID PACKAGE. ONLY CIRCUIT, FEEDERS, AND CONDUIT TO BE STUBBED UP UNDER BASE BID PACKAGE TO EDGE OF ACCESS ROADWAY.

9 15KV, 200A, 2-WAY ALUMINUM SECTIONALIZING CABINET.

10 ROUTE TWO DEDICATED 20A, 1-POLE CIRCUITS BELOW GRADE TO EACH CABINET FROM PANEL 'ANT'. ROUTE CONDUIT PARALLEL TO 1-1/2" COMM CONDUIT REFERENCE IN KEYNOTE #6. REFER TO PANELBOARD SCHEDULE 'ANT' FOR CIRCUIT NUMBER, WIRE, AND CONDUIT INFORMATION.

11 FOR GATE OPERATOR - PROVIDE TWO 1" CONDUIT STUB-UPS (1-POWER/1-COMM) ADJACENT TO GATE OPERATOR LOCATION. ROUTE BELOW GRADE TO GATE OPERATOR SYSTEM AND ELECTRICAL PANEL LOCATED IN ELECTRICAL ROOM 108. COORDINATE ADDITIONAL WIRING REQUIREMENTS WITH GATE OPERATOR SUPPLIER.

12 FOR CARD READER/INTERCOM NEAR VEHICLE ACCESS GATE - PROVIDE TWO 1" CONDUIT STUB-UPS (1-POWER/1-COMM) UNDER STANCHION LOCATION. ROUTE BELOW GRADE TO ACCESS CONTROL SYSTEM, AND ELECTRICAL PANEL, LOCATED IN COMM ROOM 107. COORDINATE ADDITIONAL WIRING REQUIREMENTS WITH EQUIPMENT SUPPLIER.

13 FOR CARD READER/INTERCOM NEAR MAIN ACCESS GATE - PROVIDE TWO 1" CONDUIT STUB-UPS (1-POWER/1-COMM) NEAR MAIN GATE LOCATION. ROUTE BELOW GRADE TO ACCESS CONTROL SYSTEM, AND ELECTRICAL PANEL, LOCATED IN COMM ROOM 107. COORDINATE ADDITIONAL WIRING REQUIREMENTS WITH EQUIPMENT SUPPLIER.

14 PROVIDE WEATHERPROOF "WHILE IN USE" GFI NEMA 120V, 20A DEDICATED RECEPTACLES MOUNTED ON BOTTOM OF STEEL STRUCTURE AS IDENTIFIED IN KEYNOTE 10. REFER TO "EQUIPMENT MOUNTING STRUCTURE" DETAIL ON SHEET EP502.

15 FEEDER AND CONDUIT TO BE ROUTED TO DISTRIBUTION PANELBOARD 'DP', IN ELECTRICAL ROOM. REFER TO POWER RISER DIAGRAM FOR ADDITIONAL INFORMATION.

16 FOR CARD READER/INTERCOM - PROVIDE 2" CONDUIT STUB-UP UNDER STANCHION LOCATION. ROUTE BELOW GRADE TO INTERCOM AND ACCESS CONTROL SYSTEM LOCATED IN COMM ROOM 107. COORDINATE ADDITIONAL WIRING REQUIREMENTS WITH STANCHION SUPPLIER.

17 FOR GATE OPERATOR, PROVIDE TWO 1" CONDUIT STUB UPS (1-POWER/1-COMMS) ADJACENT TO GATE OPERATOR LOCATION. ROUTE BELOW GRADE TO OPERATOR SYSTEM, AND TO CIRCUIT SHOWN, LOCATED IN ELECTRICAL ROOM 108. COORDINATE ADDITIONAL WIRING REQUIREMENTS WITH GATE OPERATOR SUPPLIER.

18 FOR TURNSTILE, PROVIDE TWO 1" CONDUIT STUB-UPS (1-POWER/1-COMMS) ADJACENT TO TURNSTILE LOCATION. ROUTE BELOW GRADE TO GATE OPERATOR SYSTEM, AND CIRCUIT SHOWN, LOCATED IN ELECTRICAL ROOM 108. COORDINATE ADDITIONAL WIRING REQUIREMENTS WITH TURNSTILE SUPPLIER.

N

SYM	DESCRIPTION	DATE	APPR

NAVFAC

NORTH CAROLINA PROFESSIONAL SEAL 037183 ENGINEER EDWARD CHINNIS, JR. 6/25/2020

HDR
440 S. CHURCH STREET, SUITE 1000
CHARLOTTE, NC 28202
TEL (704)338-6700
A/E INFO

APPROVED
FOR COMMANDER NAVFAC 7/10/2020

ACTIVITY
Approved by Emily Sylvester, Director of Installation Development Division

SATISFACTORY TO DATE	06/19/2020		
DES EC	DRW DJF	CHK EC	
PM/DM	SGL/RMS		
BRANCH MANAGER	JAS		
CHIEF ENG/ARCH	EJA		
FIRE PROTECTION			

DEPARTMENT OF THE NAVY
NAVAL FACILITIES ENGINEERING COMMAND ~ MID-ATLANTIC
MIDLANT CI CORE
NAVAL FACILITIES ENGINEERING COMMAND
CAMP LEJEUNE - JACKSONVILLE, NC
MARSOC
JACKSONVILLE, NORTH CAROLINA
P1395 MARINE RAIDER HEADQUARTERS
SITE PLAN - ELECTRICAL

SCALE:	AS NOTED
EPROJECT NO.:	1603164
CONSTR. CONTR. NO.	
NAVFAC DRAWING NO.	12794395
SHEET	176 OF 228

ES101

DRAWFORM REVISION: 17 APRIL 2018

C:\n\f20\16\1603694\3-E-CENTRAL_P-1395 MARINE HQ_jeremy.forrest.rvt
6/25/2020 8:38:54 AM



A1 FIRST FLOOR PLAN - LIGHTING - AREA A

1/8" = 1'-0"

0 4' 8' 16'

GENERAL NOTES

1. REFER TO PANEL SCHEDULES FOR CONDUIT AND WIRE SIZES.
2. ALL EMERGENCY LIGHTING BATTERY UNITS AND EXIT SIGNS SHALL BE CONNECTED TO THE UNSWITCHED SIDE OF THE LIGHTING CIRCUIT SERVING THE CORRESPONDING AREA. UNLESS NOTED OTHERWISE.
3. LOWER CASE LETTERS INDICATE SEPARATION OF CONTROL FOR LIGHTING. PROVIDE CONDUIT AND WIRING TO CONNECT LUMINAIRES ACCORDINGLY.
4. THE LIGHTING CONTROL STRATEGY IS INDICATED ON THE PLANS FOR EACH ROOM. REFER TO THE LIGHTING CONTROL STRATEGY SCHEDULE ON SHEET EL601 FOR ADDITIONAL INFORMATION AND PROVIDE ALL CONDUIT, WIRING AND ACCESSORIES FOR THE CONTROL STRATEGY INDICATED.
5. LOW VOLTAGE CONTROL WIRING MUST NOT BE INSTALLED IN THE SAME RACEWAY AS LINE VOLTAGE WIRING.
6. COORDINATE FINAL LOCATION OF LUMINAIRES AND LIGHTING CONTROL DEVICES WITH MECHANICAL SYSTEMS.
7. IN ROOMS THAT HAVE A DAYLIGHT SENSOR, LUMINAIRE MUST BE PROGRAMMED TO AUTOMATICALLY BRIGHTEN AND DIM TO MAINTAIN THE REQUIRED LIGHT LEVEL IN THE SPACE BASED ON AMOUNT OF DAYLIGHTING EXISTING IN THE SPACE.

KEY PLAN

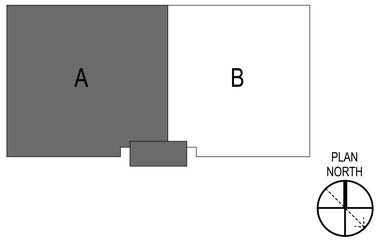

SYM	DESCRIPTION	DATE	APPR

NAVFAC

NORTH CAROLINA PROFESSIONAL SEAL 037183 ENGINEER EDWARD CHINNIS, JR. 6/25/2020

HDR
440 S. CHURCH STREET, SUITE 1000
CHARLOTTE, NC 28202
TEL (704)338-6700

A/E INFO

APPROVED
Jeremy Sylvester, P.E.
FOR COMMANDER NAVFAC 7/10/2020

ACTIVITY
Approved by Emily Sylvester, Director of Installation Development Division

SATISFACTORY TO DATE 06/19/2020

DES	EC	DRW	DJF	CHK	EC
PM/DM	SGL/RMS				
BRANCH MANAGER	JAS				
CHIEF ENG/ARCH	EJA				
FIRE PROTECTION					

DEPARTMENT OF THE NAVY
NAVAL FACILITIES ENGINEERING COMMAND
NAVAL FACILITIES ENGINEERING COMMAND ~ MID-ATLANTIC
MIDLANT CI CORE
CAMP LEJEUNE - JACKSONVILLE, NC
MARSOC
JACKSONVILLE, NORTH CAROLINA
P1395 MARINE RAIDER HEADQUARTERS
FIRST FLOOR PLAN - LIGHTING - AREA A

SCALE: AS NOTED
EPROJECT NO.: 1603164
CONSTR. CONTR. NO.
NAVFAC DRAWING NO. 12794396
SHEET 177 OF 228
EL101

DRAWFORM REVISION: 17 APRIL 2018

C:\vvt\2016\10136813-E-CENTRAL_P-1395 MARINE HQ_jeremy.forrest.rvt
6/25/2020 8:27:45 AM



A1 FIRST FLOOR PLAN - LIGHTING - AREA B

1/8" = 1'-0"

0 4' 8' 16'

GENERAL NOTES

1. REFER TO PANEL SCHEDULES FOR CONDUIT AND WIRE SIZES.
2. ALL EMERGENCY LIGHTING BATTERY UNITS AND EXIT SIGNS SHALL BE CONNECTED TO THE UNSWITCHED SIDE OF THE LIGHTING CIRCUIT SERVING THE CORRESPONDING AREA. UNLESS NOTED OTHERWISE.
3. LOWER CASE LETTERS INDICATE SEPARATION OF CONTROL FOR LIGHTING. PROVIDE CONDUIT AND WIRING TO CONNECT LUMINAIRES ACCORDINGLY.
4. THE LIGHTING CONTROL STRATEGY IS INDICATED ON THE PLANS FOR EACH ROOM. REFER TO THE LIGHTING CONTROL STRATEGY SCHEDULE ON SHEET EL601 FOR ADDITIONAL INFORMATION AND PROVIDE ALL CONDUIT, WIRING AND ACCESSORIES FOR THE CONTROL STRATEGY INDICATED.
5. LOW VOLTAGE CONTROL WIRING MUST NOT BE INSTALLED IN THE SAME RACEWAY AS LINE VOLTAGE WIRING.
6. COORDINATE FINAL LOCATION OF LUMINAIRES AND LIGHTING CONTROL DEVICES WITH MECHANICAL SYSTEMS.
7. IN ROOMS THAT HAVE A DAYLIGHT SENSOR, LUMINAIRE MUST BE PROGRAMMED TO AUTOMATICALLY BRIGHTEN AND DIM TO MAINTAIN THE REQUIRED LIGHT LEVEL IN THE SPACE BASED ON AMOUNT OF DAYLIGHTING EXISTING IN THE SPACE.

KEY PLAN

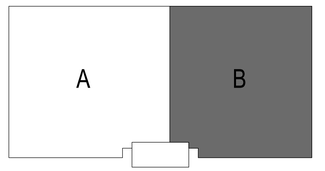

PLAN NORTH

SYM	DESCRIPTION	DATE	APPR

NAVFAC

NORTH CAROLINA PROFESSIONAL SEAL 037183 ENGINEER EDWARD CHINNIS, JR.
6/25/2020
SEAL

HDR
440 S. CHURCH STREET, SUITE 1000
CHARLOTTE, NC 28202
TEL (704)338-6700

A/E INFO

APPROVED
Joseph E. Donahue, P.E.
FOR COMMANDER NAVFAC 7/10/2020

ACTIVITY
Approved by Emily Sylvester, Director of Installation Development Division

SATISFACTORY TO DATE 06/19/2020

DES	EC	DRW	DJF	CHK	EC
PM/DM	SGL/RMS				
BRANCH MANAGER	JAS				
CHIEF ENG/ARCH	EJA				
FIRE PROTECTION					

DEPARTMENT OF THE NAVY
NAVAL FACILITIES ENGINEERING COMMAND
MIDLANT CI CORE
NAVAL FACILITIES ENGINEERING COMMAND ~ MID-ATLANTIC
CAMP LEJEUNE - JACKSONVILLE, NC
MARSOC
JACKSONVILLE, NORTH CAROLINA
P1395 MARINE RAIDER HEADQUARTERS
FIRST FLOOR PLAN - LIGHTING - AREA B

SCALE: AS NOTED
EPROJECT NO.: 1603164
CONSTR. CONTR. NO.
NAVFAC DRAWING NO. 12794397
SHEET 178 OF 228
EL102

DRAWFORM REVISION: 17 APRIL 2018

C:\rvt\2016\101368\13-E-CENTRAL_P-1395 MARINE HQ_jeremy.forrest.rvt
6/25/2020 8:27:50 AM

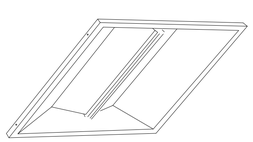

LUMINAIRE REQUIREMENTS:

1. HOUSING - DIE-FORMED, COLD ROLLED STEEL, WITH ONE-PIECE LOWER REFLECTOR HAVING TEXTURED, HIGH REFLECTANCE, WHITE POLYESTER POWDER-COATED FINISH. OPTIONAL SIZES OF 1FT x 4FT, 2FT x 2FT, AND 2FT x 4FT AVAILABLE.
2. LIGHT SOURCE - UPWARD-FACING LEDS WITH DIFFUSE LENS TO ELIMINATE DIRECT VIEW OF LIGHT SOURCE. 3500K COLOR TEMPERATURE UON, MAXIMUM BINNING TOLERANCE OF A 4-STEP MCADAM ELLIPSE, MINIMUM EFFICACY OF 90 LUMENS/WATT, WITH A MINIMUM CRI OF 80. INITIAL LUMEN OUTPUT AS INDICATED IN LUMINAIRE SCHEDULE.
4. DRIVER - REPLACEABLE, INTEGRAL, HIGH-EFFICIENCY DRIVER WITH MINIMUM 0.9 PF, OPERATING VOLTAGE OF 120-277V, THERMAL MANAGEMENT, < 20% TOTAL HARMONIC DISTORTION. STEP-DIMMABLE OR FULLY DIMMABLE AS INDICATED IN LUMINAIRE SCHEDULE.
5. CERTIFICATION - UL 1598, DAMP LOCATION, DLC QUALIFIED, AND ROHS COMPLIANT. COMPLIES WITH LM79, LM80 AND TM21 TESTING STANDARDS. UL 924 WHEN EQUIPPED WITH EMERGENCY BATTERY BACK-UP. IC RATED WHEN INDICATED.
6. MOUNTING - RECESSED IN SUSPENDED ACOUSTICAL TILE OR HARD CEILING.
7. THIS SKETCH IS A NON-PROPRIETARY GRAPHIC REPRESENTATION OF A LUMINAIRE THAT MAY MEET THE SPECIFICATION REQUIREMENTS. IT IS NOT INTENDED TO INDICATE A CERTAIN MANUFACTURER OR PREFERENCE.

DIRECT/INDIRECT LED TROFFER

REVISED: APRIL 2016 | LIGHTING PLATE: NL-1

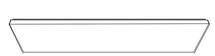

LUMINAIRE REQUIREMENTS:

1. HOUSING - DIE-FORMED, COLD-ROLLED STEEL, WITH REINFORCEMENT RIBS FOR RIGIDITY; ENDCAPS SAME MATERIAL AS HOUSING, SECURED WITH TABS, SCREWS OR RIVETS. OPTIONAL LENGTHS OF 2FT OR 4FT.
2. FINISH - MULTI-STAGE PHOSPHATE BONDING TREATMENT FINISHED WITH HIGH-REFLECTANCE, WHITE POLYESTER POWDER COAT, PAINTED AFTER FABRICATION.
3. LENS - 100% VIRGIN ACRYLIC, CLEAR PRISMATIC DIFFUSER WITH MINIMUM 0.1 INCH THICKNESS, CONTINUOUSLY SUPPORTED ALONG SIDES OF LUMINAIRE.
4. LIGHT SOURCE - SOLID STATE LEDS WITH MINIMUM 50K HOURS RATED LIFE AT L70, 3500K CCT UON, MINIMUM 80 CRI, MAXIMUM 4-STEP MCADAM ELLIPSE BINNING TOLERANCE FOR COLOR CONSISTENCY, AND MINIMUM EFFICACY OF 95 LUMENS/WATT. INITIAL LUMEN OUTPUT AS INDICATED IN LUMINAIRE SCHEDULE.
5. DRIVER - REPLACEABLE, INTEGRAL, HIGH-EFFICIENCY DRIVER WITH MINIMUM 0.9 PF, OPERATING VOLTAGE OF 120-277V, THERMAL MANAGEMENT, < 20% TOTAL HARMONIC DISTORTION. OPTIONAL STEP-DIMMABLE OR FULLY DIMMABLE AS INDICATED.
6. CERTIFICATION - UL 1598, DAMP LOCATION, DLC QUALIFIED, AND ROHS COMPLIANT. COMPLIES WITH LM79, LM80 AND TM21 TESTING STANDARDS. UL 924 WHEN EQUIPPED WITH EMERGENCY BATTERY BACK-UP.
7. MOUNTING - SURFACE ON CEILING OR SUSPENDED.
8. THIS SKETCH IS A NON-PROPRIETARY GRAPHIC REPRESENTATION OF A LUMINAIRE THAT MAY MEET THE SPECIFICATION REQUIREMENTS. IT IS NOT INTENDED TO INDICATE A CERTAIN MANUFACTURER OR PREFERENCE.

SURFACE LED WRAPAROUND

REVISED: APRIL 2016 | LIGHTING PLATE: NL-5

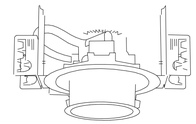

LUMINAIRE REQUIREMENTS:

1. HOUSING - DIE-FORMED, COLD-ROLLED STEEL, OR FORGED ALUMINUM WITH HEAT SINK. DRIVER MUST BE ACCESSIBLE FROM BOTTOM OF LUMINAIRE. PROVIDE T-BAR HANGERS FOR INSTALLATION IN ACOUSTICAL TILE CEILINGS OR TABS WHEN MOUNTING IN HARD CEILINGS.
2. REFLECTOR AND TRIM - SPECIFICATION GRADE, LOW IRRIDESCENT, SPECULAR ALUMINUM REFLECTOR WITH METALLIC OR PAINTED TRIM RING..
3. LIGHT SOURCE - SOLID STATE LEDS WITH MINIMUM 50K HOURS RATED LIFE AT L70, 3500K CCT UON, MINIMUM 80 CRI, MAXIMUM 4-STEP MCADAM ELLIPSE BINNING TOLERANCE FOR COLOR CONSISTENCY, AND MINIMUM EFFICACY OF 90 LUMENS/WATT. INITIAL LUMEN OUTPUT AS INDICATED IN LUMINAIRE SCHEDULE.
4. DRIVER - REPLACEABLE, INTEGRAL, HIGH-EFFICIENCY DRIVER WITH MINIMUM 0.9 PF, OPERATING VOLTAGE OF 120-277V, THERMAL MANAGEMENT, < 20% TOTAL HARMONIC DISTORTION. ON-OFF CONTROL, STEP-DIMMABLE OR FULLY DIMMABLE AS INDICATED.
5. CERTIFICATION - UL 1598, DAMP LOCATION, DLC QUALIFIED, AND ROHS COMPLIANT. COMPLIES WITH LM79, LM80 AND TM21 TESTING STANDARDS. UL 924 WHEN EQUIPPED WITH EMERGENCY BATTERY BACK-UP.
6. MOUNTING - RECESSED IN HARD OR ACOUSTICAL TILE CEILING.
7. OPTIONS - EMERGENCY BATTERY BACK-UP, WALL-WASH TRIM, IC RATED FOR DIRECT CONTACT WITH INSULATION, VARIOUS APERTURE DIAMETERS, AND VARIOUS GLASS LENSES.
8. THIS SKETCH IS A NON-PROPRIETARY GRAPHIC REPRESENTATION OF A LUMINAIRE THAT MAY MEET THE SPECIFICATION REQUIREMENTS. IT IS NOT INTENDED TO INDICATE A CERTAIN MANUFACTURER OR PREFERENCE.

LED RECESSED DOWNLIGHT

REVISED: APRIL 2016 | LIGHTING PLATE: NL-19

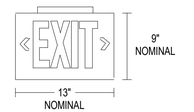

LUMINAIRE REQUIREMENTS:

1. HOUSING - DIE-CAST ALUMINUM OR HIGH-IMPACT, UV-STABILIZED, INJECTION-MOLDED THERMOPLASTIC. SINGLE OR DOUBLE-FACED AS INDICATED.
2. FINISH (ON CAST ALUMINUM HOUSING ONLY) - TEXTURED POWDER COAT FINISH OPTIONS INCLUDE WHITE, WHITE WITH BRUSHED ALUMINUM FACE, BLACK, OR BLACK WITH BRUSHED ALUMINUM FACE.
3. LETTERS/CHEVRONS - MINIMUM 6" HIGH WITH 3/4" STROKE. RED OR GREEN LETTERS AS INDICATED. PROVIDE CHEVRONS AS INDICATED EITHER LEFT, RIGHT OR BOTH DIRECTIONS AS INDICATED. CHEVRONS PUNCHED OUT THROUGH HOUSING AS REQUIRED.
4. EMERGENCY PACK - SOLID-STATE, CONSTANT-CURRENT TYPE BATTERY CHARGER WITH MAINTENANCE-FREE, NICKEL-CADMIUM BATTERY, AC-ON INDICATOR LAMP AND TEST SWITCH.
5. MOUNTING - UNIVERSAL MOUNTING KIT FOR CEILING, WALL OR END-OF-FIXTURE MOUNTING.
6. ILLUMINATION - PROVIDED BY RED, GREEN OR WHITE HIGH-OUTPUT LEDS INSIDE OF FIXTURE HOUSING. PROVIDE POLYSTYRENE DIFFUSER IN COLOR INDICATED WITH FREQUENCY-MATCHED SILKSCREEN COATING FOR MAXIMUM LED LIGHT OUTPUT.
7. CERTIFICATION - UL LISTED AND CERTIFIED FOR DAMP LOCATIONS.

LED EXIT SIGN

REVISED: AUGUST 2004 | LIGHTING PLATE: NL-63



LUMINAIRE REQUIREMENTS:

1. HOUSING - DIE-FORMED, COLD-ROLLED STEEL, WITH REINFORCEMENT RIBS FOR RIGIDITY; END CAPS SAME MATERIAL AS HOUSING, SECURED WITH TABS, SCREWS OR RIVETS. WHITE ENAMEL FINISH APPLIED AFTER FABRICATION. OPTIONAL LENGTHS OF 2FT OR 4FT.
2. LENS - ACRYLIC PRISMATIC OR WHITE OPAL TO PROVIDE EVEN ILLUMINATION AND TO ELIMINATE PIXILATION FROM LED LIGHT SOURCE.
3. LIGHT SOURCE - SOLID STATE LEDS WITH MINIMUM 50K HOURS RATED LIFE AT L70, 3500K CCT UON, MINIMUM 80 CRI, MAXIMUM 4-STEP MCADAM ELLIPSE BINNING TOLERANCE FOR COLOR CONSISTENCY, AND MINIMUM EFFICACY OF 90 LUMENS/WATT. INITIAL LUMEN OUTPUT AS INDICATED IN LUMINAIRE SCHEDULE.
4. DRIVER - REPLACEABLE, INTEGRAL, HIGH-EFFICIENCY DRIVER WITH MINIMUM 0.9 PF, OPERATING VOLTAGE OF 120-277V, THERMAL MANAGEMENT, < 20% TOTAL HARMONIC DISTORTION. ON-OFF CONTROL, STEP-DIMMABLE OR FULLY DIMMABLE AS INDICATED.
5. CERTIFICATION - UL 1598, DAMP LOCATION, DLC QUALIFIED, AND ROHS COMPLIANT. COMPLIES WITH LM79, LM80 AND TM21 TESTING STANDARDS. UL 924 WHEN EQUIPPED WITH EMERGENCY BATTERY BACK-UP.
6. MOUNTING - SURFACE.
7. OPTIONS - INTEGRAL MOTION SENSOR, EMERGENCY BACK-UP.
8. THIS SKETCH IS A NON-PROPRIETARY GRAPHIC REPRESENTATION OF A LUMINAIRE THAT MAY MEET THE SPECIFICATION REQUIREMENTS. IT IS NOT INTENDED TO INDICATE A CERTAIN MANUFACTURER OR PREFERENCE.

WALL MOUNTED LED

REVISED: APRIL 2016 | LIGHTING PLATE: NL-9

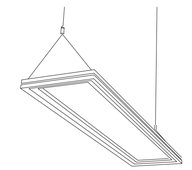

LUMINAIRE REQUIREMENTS:

1. HOUSING - DIE-CAST ALUMINUM FRAME AND HEAT SINK WITH SILVER OR WHITE ENAMELED FINISH. APPROXIMATELY 1 FT x 4 FT.
2. LENS - IMPACT-RESISTANT ACRYLIC.
3. LIGHT SOURCE - SOLID STATE LEDS WITH MINIMUM 50K HOURS RATED LIFE AT L70, 3500K CCT UON, MINIMUM 80 CRI, MAXIMUM 4-STEP MCADAM ELLIPSE BINNING TOLERANCE FOR COLOR CONSISTENCY, AND MINIMUM EFFICACY OF 75 LUMENS/WATT. INITIAL LUMEN OUTPUT AS INDICATED IN LUMINAIRE SCHEDULE.
4. DRIVER - REMOTELY-LOCATED ABOUT CEILING, REPLACEABLE, HIGH-EFFICIENCY DRIVER WITH MINIMUM 0.9 PF, OPERATING VOLTAGE OF 120-277V, THERMAL MANAGEMENT, < 20% TOTAL HARMONIC DISTORTION. ON-OFF CONTROL, STEP-DIMMABLE OR FULLY DIMMABLE AS INDICATED.
5. CERTIFICATION - UL 1598, DLC QUALIFIED, AND ROHS COMPLIANT. COMPLIES WITH LM79, LM80 AND TM21 TESTING STANDARDS.
6. MOUNTING - SUSPENDED FROM HARD OR ACOUSTICAL TILE CEILING.
7. OPTIONS - 0-10V OR DALI SYSTEM DIMMING.
8. THIS SKETCH IS A NON-PROPRIETARY GRAPHIC REPRESENTATION OF A LUMINAIRE THAT MAY MEET THE SPECIFICATION REQUIREMENTS. IT IS NOT INTENDED TO INDICATE A CERTAIN MANUFACTURER OR PREFERENCE.

LED LINEAR PENDANT

REVISED: APRIL 2016 | LIGHTING PLATE: NL-13

SYM	DESCRIPTION	DATE	APPR

NAVFAC

NORTH CAROLINA PROFESSIONAL SEAL 037183 ENGINEER EDWARD CHINNIS, JR. 6/25/2020

HDR
440 S. CHURCH STREET, SUITE 1000
CHARLOTTE, NC 28202
TEL (704)338-6700

A/E INFO

APPROVED
FOR COMMANDER NAVFAC 7/01/2020
ACTIVITY
Approved by Emily Sylvester, Director of Installation Development Division
SATISFACTORY TO DATE 06/19/2020
DES EC | DRW DJF | CHK EC
PM/DM SGL/RMS
BRANCH MANAGER JAS
CHIEF ENG/ARCH EJA
FIRE PROTECTION

DEPARTMENT OF THE NAVY
NAVAL FACILITIES ENGINEERING COMMAND
MIDLANT CI CORE
MARSOC
NAVAL FACILITIES ENGINEERING COMMAND ~ MID-ATLANTIC
CAMP LEJEUNE · JACKSONVILLE, NC
JACKSONVILLE, NORTH CAROLINA

P1395 MARINE RAIDER HEADQUARTERS

LIGHTING DETAILS

SCALE: AS NOTED
EPROJECT NO.: 1603164
CONSTR. CONTR. NO.
NAVFAC DRAWING NO. 12794398
SHEET 179 OF 228

EL501

DRAWFORM REVISION: 17 APRIL 2018

C:\rvt\2016\01\P1395\13-E-CENTRAL_P-1395 MARINE HQ_jeremy.forrest.rvt
6/25/2020 8:27:53 AM

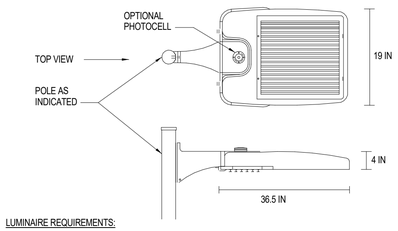

LUMINAIRE REQUIREMENTS:

1. HOUSING - DIE-CAST ALUMINUM OR DIE-CAST AND EXTRUDED ALUMINUM WITH INTEGRAL, SELF-CLEANING HEAT SINK FINS, RIBS, OR EQUIVALENT PASSIVE COOLING MECHANISM. HEAT SINK SHALL BE INCORPORATED DIRECTLY INTO HOUSING TO ENSURE MAXIMUM HEAT TRANSFER AND DISSIPATION.
2. FINISH - MULTI-STAGE PRE-TREATMENT, FINISHED WITH BAKED-ON POLYESTER POWDER COAT. FINISH SHALL PASS 2500 HOUR SALT SPRAY TEST PER ASTM B117. FINISH COLORS INCLUDE DARK BRONZE, SILVER, OR BLACK WITH CUSTOM COLORS AVAILABLE.
3. POWER SUPPLY/LED DRIVER - PROVIDE IN SEPARATE COMPARTMENT ACCESSIBLE WITHOUT THE USE OF HAND TOOLS. CLASS 1 DRIVER SHALL OPERATE AT 120/277V, 50/60 HZ; OTHER VOLTAGES OPTIONAL. POWER FACTOR GREATER THAN 0.9 AND THD LESS THAN 20% AT FULL LOAD. MINIMUM EFFICACY SHALL BE 60 LM/W AT MAXIMUM 600 mA OPERATING CURRENT.
4. LED OPTICAL ASSEMBLY - NUMBER OF LED ARRAYS SHALL VARY TO ACCOMMODATE DESIRED LUMINAIRE OUTPUT. PROVIDE WITH EQUIVALENT NEMA TYPE III, IV OR V DISTRIBUTION AS INDICATED. BUG UPLIGHT RATING OF U0, WITH BACKLIGHT AND GLARE RATINGS AS DETERMINED BY LIGHTING ZONE INSTALLED. MINIMUM COLOR RENDERING INDEX (CRI) SHALL BE 70 FOR CORRELATED COLOR TEMPERATURE (CCT) OF 4000 K DEGREES K.
5. SURGE PROTECTION - 6 kV MINIMUM, COMPLIANT WITH ANSI C62.41.2.
6. CERTIFICATION - UL AND/OR ETL LISTED, MINIMUM IP65 RATED PER ANSI/IEC 60529, AND RoHS COMPLIANT.
7. OPTIONS - PHOTOCELL AND RECEPTACLE, SHORTING CAP, BIRD SPIKES, AND 0-10 VOLT DIMMING DRIVER.
8. OTHER - THE ABOVE SKETCH IS A NON-PROPRIETARY GRAPHIC REPRESENTATION OF A LUMINAIRE THAT MAY MEET THE SPECIFICATION REQUIREMENTS AND IS NOT INTENDED TO INDICATE A CERTAIN MANUFACTURER'S PREFERENCE. ALL DIMENSIONS ARE NOMINAL AND VARY PER MANUFACTURER.

LED AREA LUMINAIRE

REVISED:	MARCH 2013	LUMINAIRE PLATE:	XL-03

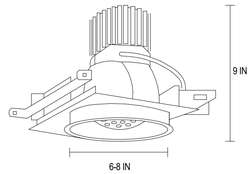

LUMINAIRE REQUIREMENTS:

1. HOUSING - ONE-PIECE, NON-CORROSIVE STEEL WITH ALUMINUM HEAT SINK. HEAT SINK SHALL BE INCORPORATED DIRECTLY INTO DRIVER COMPARTMENT TO ENSURE MAXIMUM HEAT TRANSFER AND DISSIPATION.
2. REFLECTOR - ONE-PIECE, IRIDESCENCE-SUPPRESSED ALUMINUM. PAINTED WHITE SELF-TRIM AND OTHER REFLECTOR FINISHES AS INDICATED.
3. BALLAST/LED DRIVER - TYPE A - CLASS P, HIGH POWER FACTOR, PROGRAMMED START, ELECTRONIC TYPE FOR COMPACT FLUORESCENT LIGHT SOURCE.
   TYPE B - CLASS 1, CONSTANT CURRENT, ELECTRONIC DRIVER WITH 0-10 VOLT DIMMING FOR LED LIGHT SOURCE.
4. LIGHT SOURCE - TYPE A - MULTI-TUBE, PROGRAMMED START, LOW-MERCURY, 4-PIN CFL WITH WATTAGE AND CCT AS INDICATED.
   TYPE B - MULTI-LED ARRAY WITH MINIMUM CRI OF 70 AT A CCT OF 4000 DEGREE K. LUMEN OUTPUT AND WATTAGE AS INDICATED.
5. CERTIFICATION - UL AND/OR ETL LISTED FOR DAMP OR WET LOCATIONS AS INDICATED, AND RoHS COMPLIANT.
6. OPTIONS - EMERGENCY BATTERY INVERTER. REFLECTOR COLOR AND FINISH, AND APERTURE OPENING SIZE OF 6 IN OR 8 IN.
7. OTHER - THE ABOVE SKETCH IS A NON-PROPRIETY GRAPHIC REPRESENTATION OF A LUMINAIRE THAT MAY MEET THE SPECIFICATION REQUIREMENTS AND IS NOT INTENDED TO INDICATE A CERTAIN MANUFACTURER'S PREFERENCE. ALL DIMENSIONS ARE NOMINAL AND VARY PER MANUFACTURER.

EXTERIOR RECESSED DOWNLIGHT

REVISED:	MARCH 2013	LUMINAIRE PLATE:	XL-15

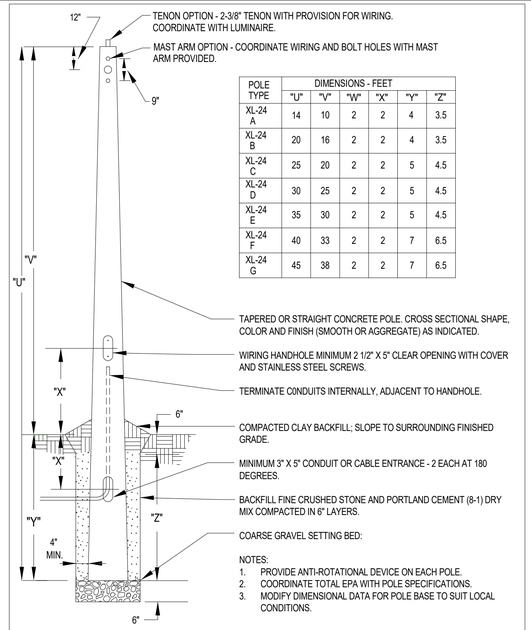

POLE TYPE	DIMENSIONS - FEET					
	"U"	"V"	"W"	"X"	"Y"	"Z"
XL-24 A	14	10	2	2	4	3.5
XL-24 B	20	16	2	2	4	3.5
XL-24 C	25	20	2	2	5	4.5
XL-24 D	30	25	2	2	5	4.5
XL-24 E	35	30	2	2	5	4.5
XL-24 F	40	33	2	2	7	6.5
XL-24 G	45	38	2	2	7	6.5

NOTES:
1. PROVIDE ANTI-ROTATIONAL DEVICE ON EACH POLE.
2. COORDINATE TOTAL EPA WITH POLE SPECIFICATIONS.
3. MODIFY DIMENSIONAL DATA FOR POLE BASE TO SUIT LOCAL CONDITIONS.

DIRECT-SET CONCRETE POLE

REVISED:	MARCH 2013	LUMINAIRE PLATE:	XL-24

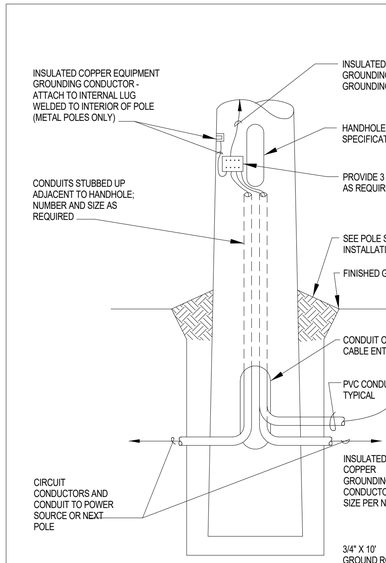

DIRECT SET POLE GROUNDING DETAIL

REVISED:	MARCH 2013	LUMINAIRE PLATE:	XL-30

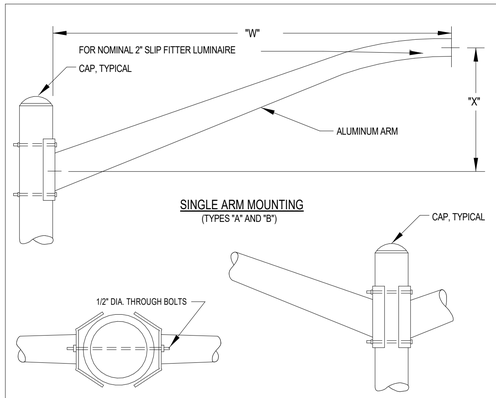

MOUNTING ARM DIMENSIONS		
TYPE	"W"	"X"
XL-32, A	48"	15"
XL-32, B	72"	24"
XL-32, C	48"	15"
XL-32, D	72"	24"

NOTE: ALL MOUNTING HARDWARE FOR ARMS SHALL BE HOT-DIP GALVANIZED.

LUMINAIRE MOUNTING ARM DETAILS

REVISED:	MARCH 2013	LUMINAIRE PLATE:	XL-32

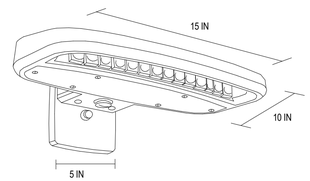

LUMINAIRE REQUIREMENTS:

1. HOUSING - DIE-CAST OR EXTRUDED ALUMINUM WITH INTEGRAL PASSIVE COOLING MECHANISM. HEAT SINK SHALL BE INCORPORATED DIRECTLY INTO HOUSING OR DRIVER COMPARTMENT TO ENSURE MAXIMUM HEAT TRANSFER AND DISSIPATION.
2. FINISH - MULTI-STAGE PRE-TREATMENT, FINISHED WITH BAKED-ON POLYESTER POWDER COAT. FINISH SHALL PASS 2500 HOUR SALT SPRAY TEST PER ASTM B117. STANDARD FINISH IS DARK BRONZE, WITH OTHER CUSTOM COLORS AVAILABLE.
3. POWER SUPPLY/LED DRIVER - CLASS 1 DRIVER SHALL OPERATE AT 120/277 VOLTS, 50/60 HZ, WITH OTHER VOLTAGES OPTIONAL; POWER FACTOR GREATER THAN 0.9 AND THD LESS THAN 20% AT FULL LOAD. MINIMUM EFFICACY SHALL BE 60 LM/W AT MAXIMUM 600mA OPERATING CURRENT.
4. LED OPTICAL ASSEMBLY - PRECISION MOLDED ACRYLIC LENS PROVIDED FOR MULTIPLE HIGH-POWERED LEDS PRODUCING NEMA TYPE III DISTRIBUTION OR AS OTHERWISE INDICATED. BUG UPLIGHT RATING OF U0, WITH GLARE RATING AS DETERMINED BY LIGHTING ZONE INSTALLED. MINIMUM COLOR RENDERING INDEX (CRI) SHALL BE 70 FOR CORRELATED COLOR TEMPERATURE (CCT) OF 4000 DEGREES K.
5. CERTIFICATION - UL AND/OR ETL LISTED FOR DAMP OR WET LOCATIONS AS INDICATED, AND RoHS COMPLIANT.
6. OPTIONS - VARIOUS LUMEN OUTPUT RATING AS INDICATED, PHOTOCELL, AND 0-10 VOLT DIMMING DRIVER.
7. OTHER - THE ABOVE SKETCH IS A NON-PROPRIETY GRAPHIC REPRESENTATION OF A LUMINAIRE THAT MAY MEET THE SPECIFICATION REQUIREMENTS AND IS NOT INTENDED TO INDICATE A CERTAIN MANUFACTURER'S PREFERENCE. ALL DIMENSIONS ARE NOMINAL AND VARY PER MANUFACTURER.

LED WALL PACK

REVISED:	MARCH 2013	LUMINAIRE PLATE:	XL-17

SYM	DESCRIPTION	DATE	APPR

NAVFAC

NORTH CAROLINA PROFESSIONAL SEAL 037183 ENGINEER EDWARD CHINNIS, JR. 6/25/2020

HDR
440 S. CHURCH STREET, SUITE 1000
CHARLOTTE, NC 28202
TEL (704)338-6700

A/E INFO

APPROVED
(date) 7/1/2020
FOR COMMANDER NAVFAC
ACTIVITY
Approved by Emily Sylvester, Director of Installation Development Division
SATISFACTORY TO DATE 06/19/2020
DES EC DRW DJF CHK EC
PM/DM SGL/RMS
BRANCH MANAGER JAS
CHIEF ENG/ARCH EJA
FIRE PROTECTION

DEPARTMENT OF THE NAVY
NAVAL FACILITIES ENGINEERING COMMAND
MIDLANT CI CORE
NAVAL FACILITIES ENGINEERING COMMAND ~ MID-ATLANTIC
CAMP LEJEUNE ~ JACKSONVILLE, NC
MARSOC
JACKSONVILLE, NORTH CAROLINA
P1395 MARINE RAIDER HEADQUARTERS
LIGHTING DETAILS

SCALE: AS NOTED
EPROJECT NO.: 1603164
CONSTR. CONTR. NO.
NAVFAC DRAWING NO. 12794399
SHEET 180 OF 228

EL502

DRAWFORM REVISION: 17 APRIL 2018

C:\e420161013988\3-E-CENTRAL_P-1395 MARINE HQ_jeremy.forrest.rvt
6/25/2020 8:27:57 AM

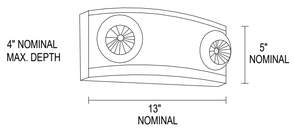

LUMINAIRE REQUIREMENTS:

1. HOUSING - UV STABLE, FLAME-RATED, HIGH-IMPACT THERMOPLASTIC IN WHITE OR BLACK TEXTURED FINISH.
2. INTERNAL COMPONENTS - FULLY AUTOMATIC, SOLID STATE, CONSTANT VOLTAGE, CURRENT-LIMITED BATTERY CHARGER; MAINTENANCE-FREE LEAD-ACID BATTERY; AND BUILT-IN OVERLOAD AND LOW-VOLTAGE BATTERY PROTECTION.
3. EXTERIOR HOUSING INDICATORS - LED AC-ON INDICATOR AND INTEGRAL TEST SWITCH.
4. LAMP HEADS - UV STABLE, FLAME RATED POLYCARBONATE THERMOPLASTIC. MR16 HALOGEN LAMPS SHALL BE 5 WATTS, HIGH-OUTPUT OR AS INDICATED IN LIGHTING FIXTURE SCHEDULE.
5. MOUNTING - DIRECTLY TO 4" OCTAGONAL OR SQUARE OUTLET BOX.
6. CERTIFICATION - UL LISTED AND LABELED. COMPLIES WITH UL 924 AND NFPA 101 REQUIREMENTS. LISTED FOR DAMP LOCATIONS.
7. OPTIONS - VOLTMETER, VANDEL-RESISTANT SHIELD, SELF-DIAGNOSTIC/TESTING ELECTRONICS AND WIRE GUARD.

DECORATIVE EMERGENCY LIGHTING UNIT

REVISED:	AUGUST 2004	LIGHTING PLATE:	NL-67

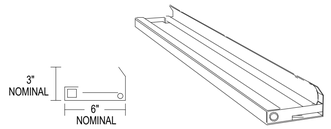

LUMINAIRE REQUIREMENTS:

1. HOUSING - DIE-FORMED, COLD-ROLLED STEEL, WITH ENDCAPS MADE FROM SAME MATERIAL AS HOUSING.
2. FINISH - MULTI-STAGE PHOSPHATE BONDING TREATMENT FINISHED WITH HIGH REFLECTANCE (MINIMUM 85%), BAKED WHITE ENAMEL FINISH.
3. LIGHT SOURCE - SOLID STATE LEDS WITH MINIMUM 50K HOURS RATED LIFE AT L70, 3500K CCT UON, MINIMUM 80 CRI, MAXIMUM 4-STEP MCADAM ELLIPSE BINNING TOLERANCE FOR COLOR CONSISTENCY, AND MINIMUM EFFICACY OF 75 LUMENS/WATT. INITIAL LUMEN OUTPUT AS INDICATED IN LUMINAIRE SCHEDULE.
4. DRIVER - REMOTELY-LOCATED ABOUT CEILING, REPLACEABLE, HIGH-EFFICIENCY DRIVER WITH MINIMUM 0.9 PF, OPERATING VOLTAGE OF 120-277V, THERMAL MANAGEMENT, < 20% TOTAL HARMONIC DISTORTION. ON-OFF CONTROL, STEP-DIMMABLE OR FULLY DIMMABLE AS INDICATED.
5. CERTIFICATION - UL 1598, DLC QUALIFIED, AND ROHS COMPLIANT. COMPLIES WITH LM79, LM80 AND TM21 TESTING STANDARDS.
6. CERTIFICATION - UL LISTED AND LABELED.
7. FIXTURE TYPES -
   TYPE A - 2' LENGTH WITH 1 OR 2 LAMPS.
   TYPE B - 3' LENGTH WITH 1 OR 2 LAMPS.
   TYPE C - 4' LENGTH WITH 1 OR 2 LAMPS.

LED COVE LIGHT

REVISED:	AUGUST 2004	LIGHTING PLATE:	NL-23

SYM	DESCRIPTION	DATE	APPR

NAVFAC

NORTH CAROLINA PROFESSIONAL SEAL 037183 ENGINEER EDWARD CHINNIS, JR.
6/25/2020
SEAL

HDR
440 S. CHURCH STREET, SUITE 1000
CHARLOTTE, NC 28202
TEL (704)338-6700
A/E INFO

APPROVED
Edward C. Chinnis, Jr., P.E.
FOR COMMANDER NAVFAC 7/10/2020

ACTIVITY
Approved by Emily Sylvester, Director of Installation Development Division

SATISFACTORY TO DATE 06/19/2020

DES	EC	DRW	DJF	CHK	EC

PM/DM SGL/RMS
BRANCH MANAGER JAS
CHIEF ENG/ARCH EJA
FIRE PROTECTION

DEPARTMENT OF THE NAVY
NAVAL FACILITIES ENGINEERING COMMAND
NAVAL FACILITIES ENGINEERING COMMAND ~ MID-ATLANTIC
CAMP LEJEUNE - JACKSONVILLE, NC
MIDLANT CI CORE
MARSOC
JACKSONVILLE, NORTH CAROLINA
P1395 MARINE RAIDER HEADQUARTERS
LIGHTING DETAILS

SCALE: AS NOTED
EPROJECT NO.: 1603164
CONSTR. CONTR. NO.
NAVFAC DRAWING NO. 12794400
SHEET 181 OF 228
EL503

DRAWFORM REVISION: 17 APRIL 2018

C:\rvt\2016\10136813-E-CENTRAL_P-1395 MARINE HQ_jeremy.forrest.rvt
6/25/2020 8:27:58 AM

LUMINAIRE SCHEDULE

FIXTURE MARK	MANUFACTURER	LAMP TYPE	LAMP NO.	WATTS	VOLTAGE	MOUNTING	NOTES	FIXTURE DESCRIPTION	LIGHTING PLATE
A1	LITHONIA OR EQUAL	LED	1	11 W	277 V	RECESSED	3500K, 1000LM, 80CRI, 120-277V, 0-10V DRIVER	6IN DOWNLIGHT	NL-19
A2	LITHONIA OR EQUAL	LED	1	11 W	277 V	RECESSED	3500K, 1000LM, 80CRI, 120-277V, 0-10V DRIVER	6IN WALLWASH	NL-19
A3	LITHONIA OR EQUAL	LED	1	8 W	277 V	RECESSED	4000K, 650LM, 80CRI, 120-277V, 0-10V DRIVER, WET LOCATION	6IN DOWNLIGHT, OUTDOOR	XL-15
A4	LITHONIA OR EQUAL	LED	1	23 W	277 V	RECESSED	3500K, 2000LM, 80CRI, 120-277V, 0-10V DRIVER	6IN DOWNLIGHT	NL-19
B1	LITHONIA OR EQUAL	LED	1	39 W	277 V	RECESSED	3500K, 4800LM, 80CRI, 120-277V, 0-10V DRIVER	2X4 VOLUMETRIC TROFFER	NL-1
B2	LITHONIA OR EQUAL	LED	1	24 W	277 V	RECESSED	3500K, 3300LM, 80CRI, 120-277V, 0-10V DRIVER	2X4 VOLUMETRIC TROFFER	NL-1
C	LITHONIA OR EQUAL	LED	1	16 W	277 V	RECESSED	3500K, 2000LM, 80CRI, 120-277V, 0-10V DRIVER	2X2 VOLUMETRIC TROFFER	NL-1
D	LITHONIA OR EQUAL	LED	1	18 W	277 V	WALL	3500K, 1500LM, 80CRI, 120-277V, 0-10V DRIVER	LINEAR VANITY	NL-9
E1	LITHONIA OR EQUAL	LED		2 W	277 V	UNIVERSAL	DIE CAST, SINGLE OR DOUBLE FACE, NI-CAD BATTERY	EMERGENCY EXIT SIGN	NL-63
E2	LITHONIA OR EQUAL	LED		6.6 W	277 V	WALL	ARCHITECTURAL, TWO HEADS, NI-CAD BATTERY	EMERGENCY LIGHT	NL-67
F	LITHONIA OR EQUAL	LED	1	46 W	277 V	SUSPENDED	3500K, 4800LM, 80CRI, 120-277V	4 FT VOLUMETRIC WRAPAROUND, MOUNT 11'-9" FROM SURFACE TO AFF	NL-5
G	LITHONIA OR EQUAL	LED	1	27 W	277 V	RECESSED	3500K, 3000LM, 80CRI, 120-277V, 0-10V DRIVER	1X4 VOLUMETRIC TROFFER	NL-1
H	LITHONIA OR EQUAL	LED	1	51 W	277 V	SUSPENDED	3500K, 4200LM, 80CRI, 120-277V	4 FT LINEAR, MOUNT 10'-0" FROM SURFACE TO AFF	NL-13
J2	WINONA OR EQUAL	LED	1	8 W	277 V	COVE	3500K, 800LM/FT, 80CRI, 120-277V, 0-10V DRIVER	2 FT COVE	NL-23
J3	WINONA OR EQUAL	LED	1	12 W	277 V	COVE	3500K, 800LM/FT, 80CRI, 120-277V, 0-10V DRIVER	3 FT COVE	NL-23
J4	WINONA OR EQUAL	LED	1	16 W	277 V	COVE	3500K, 800LM/FT, 80CRI, 120-277V, 0-10V DRIVER	4 FT COVE	NL-23
K8	LITHONIA OR EQUAL	LED	1	102 W	277 V	SUSPENDED	3500K, 1500LM, 80CRI, 120-277V, 0-10V DRIVER	8 FT LINEAR, MOUNT 8'-6" FROM SURFACE TO AFF	NL-13
K12	LITHONIA OR EQUAL	LED	1	153 W	277 V	SUSPENDED	3500K, 1500LM, 80CRI, 120-277V, 0-10V DRIVER	12 FT LINEAR, MOUNT 9'-0" FROM SURFACE TO AFF	NL-13
S1	LITHONIA OR EQUAL	LED	1	68 W	277 V	POLE	4000K, 7000LM, 120-277V, T4M OPTICS	AREA LIGHTING, 48" (AS INDICATED IN DETAIL XL-32A) MAST ARM, CONCRETE POLE TO BE 20 FEET TALL. REFER TO POLE TYPE XL-24B IN DETAIL XL-24. LUMINAIRE TO BE PROVIDED WITH INTEGRAL MOTION/AMBIANT LIGHT SENSOR.	XL-03, XL-24, XL-30, XL-32
W1	LITHONIA OR EQUAL	LED	1	19 W	277 V	WALL	4000K, 2000LM, 120-277V, T3M OPTICS	WALLPACK. LUMINAIRE TO BE PROVIDED WITH INTEGRAL MOTION/AMBIANT LIGHT SENSOR.	XL-17

LIGHTING CONTROL STRATEGY SCHEDULE

SPACE TYPE	MARK	MANUAL ON/OFF	MANUAL ON / VACANCY 50% OFF	MANUAL ON / VACANCY OFF	MANUAL 100% ON / MANUAL ADJUST / VACANCY OFF	MANUAL 50% ON / MANUAL ADJUST / VACANCY OFF	OCCUPANCY 100% ON / VACANCY 100% OFF	OCCUPANCY 100% ON / VACANCY 50% OFF	OCCUPANCY 50% ON / MANUAL ADJUST / VACANCY OFF	NOTES:
CORRIDORS	A							X		
LOUNGE AREAS	B								X	OFF WITHIN 15 MIN. OF VACANCY
STORAGE ROOMS	C			X						OFF WITHIN 15 MIN. OF VACANCY
MECHANICAL ROOMS	D	X								
ELECTRICAL ROOMS	E	X								
RESTROOMS	F						X			OFF WITHIN 15 MIN. OF VACANCY
TELECOMMUNICATION ROOM	G	X								
INDIVIDUAL OFFICES (ALTERNATE SCHEME)	H					X				OFF WITHIN 15 MIN. OF VACANCY
OPEN OFFICES (ALTERNATE SCHEME)	I								X	OFF WITHIN 15 MIN. OF VACANCY
CONFERENCE ROOMS	J				X					OFF WITHIN 15 MIN. OF VACANCY
OFFICE SUPPORT AREAS	K				X					OFF WITHIN 30 MIN. OF VACANCY
JTAC	L	X								
FIRE ALARM ROOM	M	X								
EXTERIOR LUMINAIRES "W1" AND "S1"	N									LUMINAIRE TO BE PROVIDED WITH INTEGRAL MOTION/AMBIANT LIGHT SENSOR. SENSOR TO AUTOMATICALLY REDUCE LIGHT OUTPUT TO 30% DURING PERIOD OF NO ACTIVITY.

NOTE: ROOMS WITH DAYLIGHTING SENSORS MUST HAVE THEIR SENSOR ADJUSTED SO THAT THE ROOM'S FOOT CANDLE (FC) LEVEL MEET THE UFC.

GENERAL NOTES

1. WHERE LUMINAIRES ARE SHOWN ON THE DRAWINGS AS EMERGENCY TYPE, PROVIDE INTEGRAL BATTERY AND EMERGENCY DRIVER. LUMINAIRES WITH UPLIGHT AND DOWNLIGHT SHALL UTILIZE ONLY DOWNLIGHT FOR EMERGENCY.
2. PROVIDE HARD WIRED CONNECTIONS TO ALL LIGHTING CONTROL SYSTEM AND AUTOMATIC RECEPTACLE CONTROL COMPONENTS. BATTERY POWERED WIRELESS SYSTEMS AND/OR COMPONENTS ARE NOT ALLOWED.
3. THE LIGHTING CONTROL DESIGNATION ON THE DRAWINGS INDICATE THE TYPE OF CONTROL REQUIRED IN THE CORRESPONDING ROOM/AREA. THE MANUFACTURER MUST DETERMINE THE FINAL QUANTITY AND LOCATION OF SENSORS AND ACCESSORIES FOR COMPLETE COVERAGE AND PROPER SYSTEM OPERATION.
4. PROVIDE PASSIVE INFRARED (PIR) SENSORS IN CORRIDORS AND PRIVATE OFFICES. ALL OTHER SENSORS SHALL BE DUAL TECHNOLOGY TYPE.
5. PROVIDE INSTALLATION METHODS AND MATERIALS IN ACCORDANCE WITH SPECIFICATIONS, MANUFACTURER'S RECOMMENDATIONS.

SYM	DESCRIPTION	DATE	APPR

NAVFAC

NORTH CAROLINA PROFESSIONAL SEAL 037183 ENGINEER EDWARD CHINNIS, JR. 6/25/2020

HDR
440 S. CHURCH STREET, SUITE 1000
CHARLOTTE, NC 28202
TEL (704)338-6700
A/E INFO

APPROVED
FOR COMMANDER NAVFAC 7/10/2020
ACTIVITY
Approved by Emily Sylvester, Director of Installation Development Division
SATISFACTORY TO DATE 06/19/2020

DES	EC	DRW	DJF	CHK	EC

PM/DM SGL/RMS
BRANCH MANAGER JAS
CHIEF ENG/ARCH EJA
FIRE PROTECTION

DEPARTMENT OF THE NAVY
NAVAL FACILITIES ENGINEERING COMMAND
MIDLANT CI CORE
NAVAL FACILITIES ENGINEERING COMMAND ~ MID-ATLANTIC
CAMP LEJEUNE · JACKSONVILLE, NC
MARSOC
JACKSONVILLE, NORTH CAROLINA
P1395 MARINE RAIDER HEADQUARTERS
LIGHTING FIXTURE & LIGHTING CONTROL STRATEGY SCHEDULES

SCALE: AS NOTED
EPROJECT NO.: 1603164
CONSTR. CONTR. NO.
NAVFAC DRAWING NO. 12794401
SHEET 182 OF 228

EL601

DRAWFORM REVISION: 17 APRIL 2018

C:\rvt\20181019\3683\3-E-CENTRAL_P-1395 MARINE HQ_jeremy.forrest.rvt
6/25/2020 8:28:00 AM

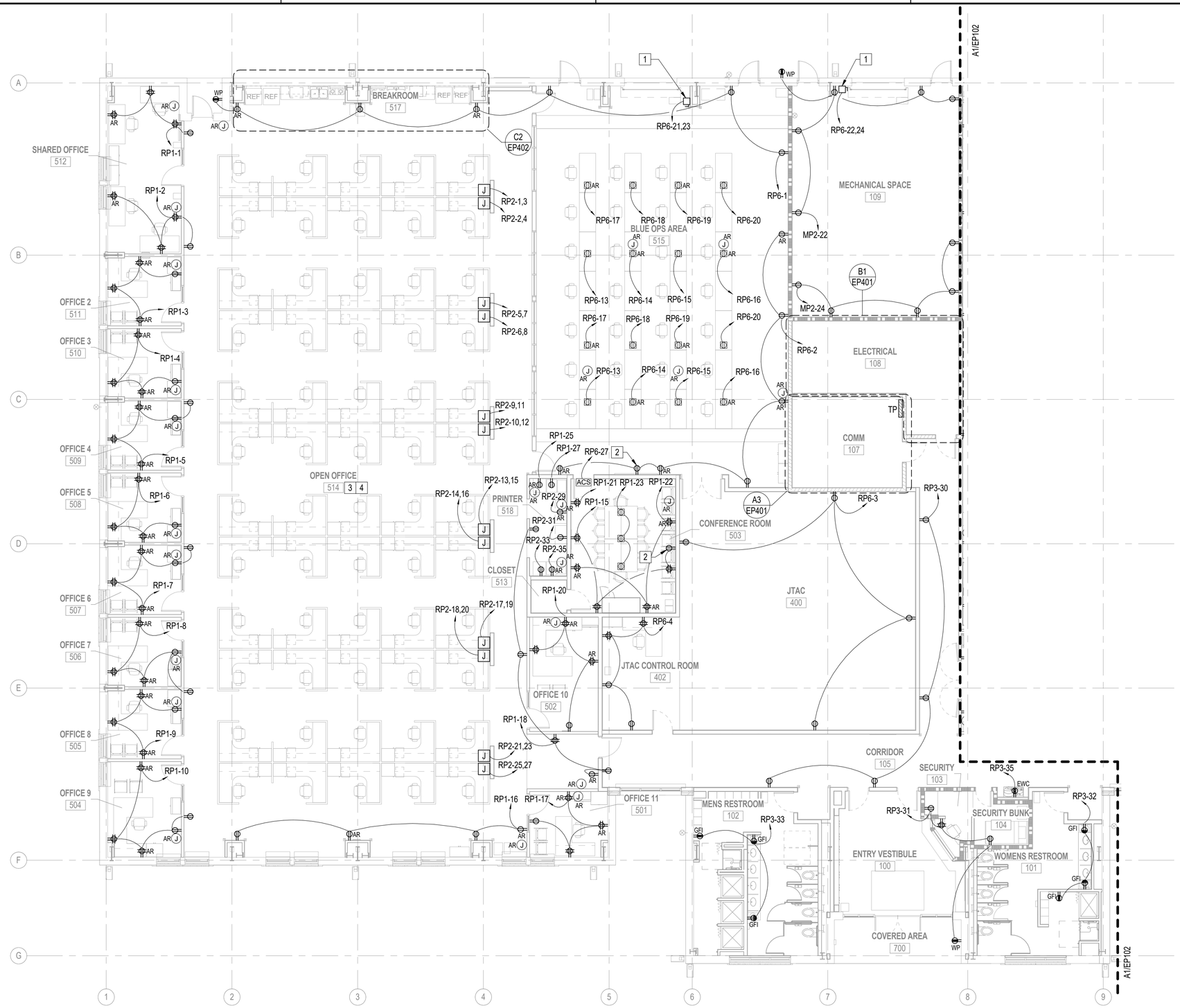

A1 FIRST FLOOR PLAN - POWER - AREA A

1/8" = 1'-0"

GENERAL NOTES

1. REFER TO PANEL SCHEDULES FOR CONDUIT AND WIRE SIZES.
2. REFER TO AUXILIARY SYSTEMS PLAN, EY101, FOR ADDITIONAL ACCESS CONTROL SYSTEM DETAILS.
3. RECEPTACLES WITH SUBSCRIPT "AR" MUST HAVE A "CONTROLLED" MARKING THAT COMPLY WITH NEC ARTICLE 406.3(E) "CONTROLLED RECEPTACLE MARKING".
4. TYPICAL - AUTOMATIC RECEPTACLE CONTROL REPLAY MODULE TO BE CONNECTED TO THE NEAREST OCCUPANCY SENSOR WITHIN THE ROOM/AREA IT RESIDES. WHEN THE ROOM/AREA IS VACANT, OCCUPANCY SENSOR WILL BE RESPONSIBLE FOR AUTOMATICALLY TURNING OFF THE RECEPTACLES WITH SUBSCRIPT "AR".
5. FIELD ADJUST CONVENIENCE RECEPTACLES SHOWN SO THAT AT LEAST ONE RECEPTACLE IS NO MORE THAN 2-3 FT FROM THE DEFIBRILLATOR WITHIN ITS RESPECTIVE ROOM.
6. PROVIDE 6" LINEAR SEPARATION BETWEEN POWER AND DATA NETWORK CABLES.
7. FOR FURNITURE CONNECTIONS, NO MORE THAN THREE CUBICLES ARE TO BE CONNECTED TO A CIRCUIT.

POWER KEYNOTES

1 30A DISCONNECT SWITCH FOR OVERHEAD DOOR.

2 RECEPTACLE FOR TIME ZONE CLOCK. COORDINATE MOUNTING HEIGHT WITH CLOCK LOCATION SUCH THAT RECEPTACLE IS HIDDEN BEHIND CLOCK.

3 FOR THE OPEN OFFICE AREA - CONNECT EACH OF THE FOLLOWING CIRCUITS TO AN AUTOMATIC RECEPTACLE CONTROL REPLAY MODULE THAT MEETS THE AUTOMATIC RECEPTACLE REQUIREMENT OF ASHRAE 90.1:
* RP2-3, RP2-4, RP2-7, RP2-8, RP2-11, RP2-12, RP2-15, RP2-16, RP2-19, RP2-20, RP2-23 AND RP2-27
EACH RECEPTACLE CONTROLLER MUST BE CAPABLE OF COMMUNICATING WITH THE OCCUPANCY SENSOR, WITHIN ITS RESPECTIVE AREA, THRU WIRELESS TECHNOLOGY.

4 FOR OPEN OFFICE AREA - CONTRACTOR TO WIRE 50% OF THE RECEPTACLES IN EACH MODULAR FURNITURE SYSTEM TO AN AUTOMATIC CONTROL RECEPTACLES CIRCUIT TO ENSURE AREA IS IN COMPLIANCE WITH THE AUTOMATIC RECEPTACLE REQUIREMENT OF ASHRAE 90.1.

KEY PLAN

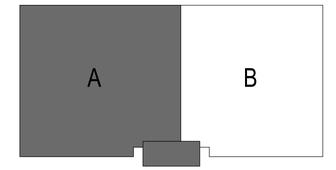

PLAN NORTH

SYM	DESCRIPTION	DATE	APPR

NAVFAC

NORTH CAROLINA PROFESSIONAL SEAL 037183 ENGINEER EDWARD CHINNIS JR. 6/25/2020

HDR
440 S. CHURCH STREET, SUITE 1000
CHARLOTTE, NC 28202
TEL (704)338-6700
A/E INFO

APPROVED
FOR COMMANDER NAVFAC 7/10/2020
ACTIVITY
Approved by Emily Sylvester, Director of Installation Development Division
SATISFACTORY TO DATE 06/19/2020
DES EC DRW DJF CHK EC
PWDM SGL/RMS
BRANCH MANAGER JAS
CHIEF ENG/ARCH EJA
FIRE PROTECTION

DEPARTMENT OF THE NAVY
NAVAL FACILITIES ENGINEERING COMMAND
MIDLANT CI CORE
MARSOC
NAVAL FACILITIES ENGINEERING COMMAND ~ MID-ATLANTIC
CAMP LEJEUNE ~ JACKSONVILLE, NC
JACKSONVILLE, NORTH CAROLINA
P1395 MARINE RAIDER HEADQUARTERS
FIRST FLOOR PLAN - POWER - AREA A

SCALE: AS NOTED
EPROJECT NO.: 1603164
CONSTR. CONTR. NO.
NAVFAC DRAWING NO. 12794402
SHEET 183 OF 228

EP101

DRAWFORM REVISION: 17 APRIL 2018

C:\e\d2016\01368\19.E-CENTRAL_P-1395 MARINE HQ_jaremy.forrest.rvt
6/25/2020 8:28:05 AM

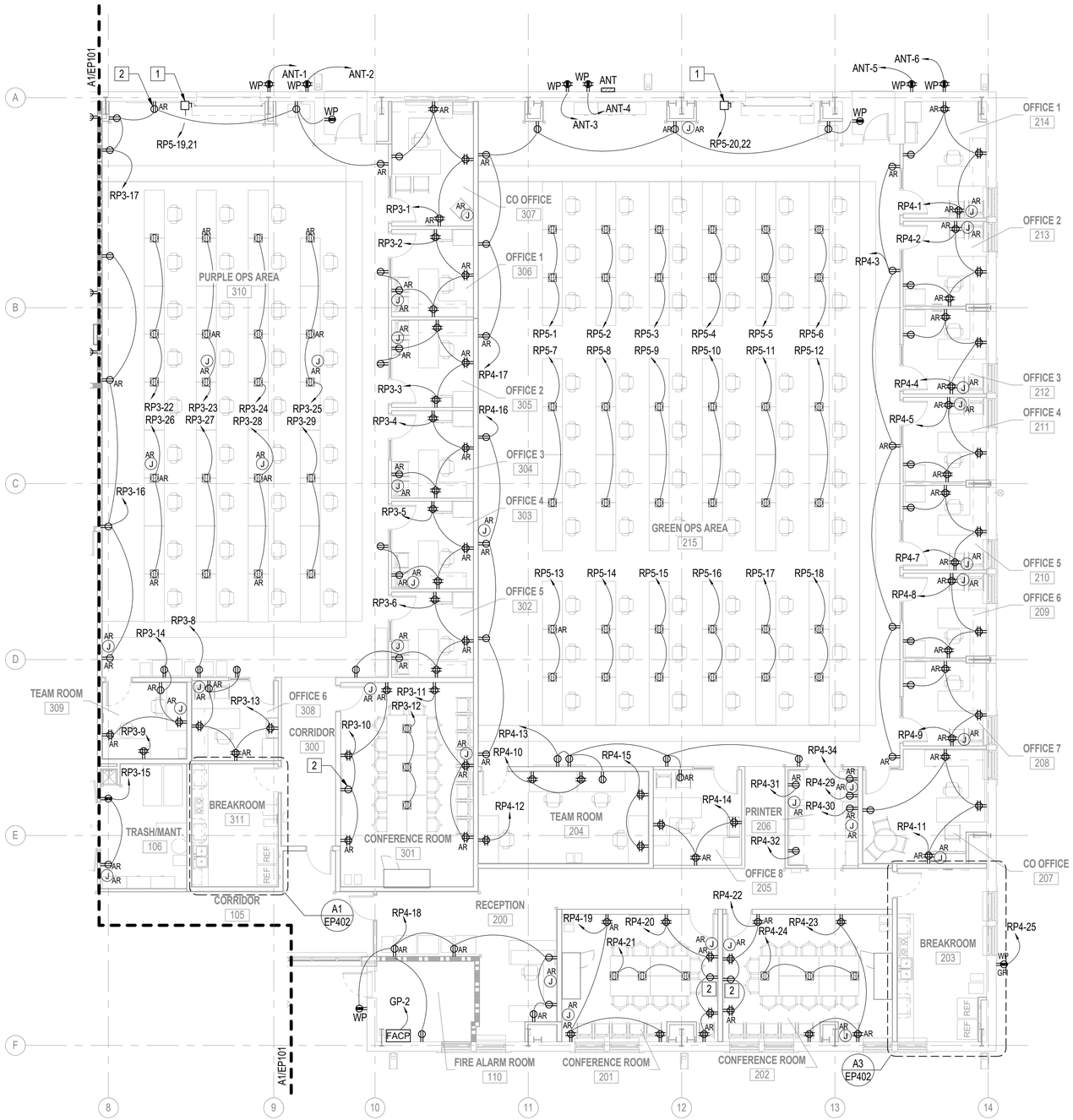

A1 FIRST FLOOR PLAN - POWER - AREA B

1/8" = 1'-0"

0 4' 8' 16'

GENERAL NOTES

1. REFER TO PANEL SCHEDULES FOR CONDUIT AND WIRE SIZES.
2. REFER TO AUXILIARY SYSTEMS PLAN, EY101, FOR ADDITIONAL ACCESS CONTROL SYSTEM DETAILS.
3. RECEPTACLES WITH SUBSCRIPT "AR" MUST HAVE A "CONTROLLED" MARKING THAT COMPLY WITH NEC ARTICLE 406.3(E) "CONTROLLED RECEPTACLE MARKING".
4. TYPICAL - AUTOMATIC RECEPTACLE CONTROL REPLAY MODULE TO BE CONNECTED TO THE NEAREST OCCUPANCY SENSOR WITHIN THE ROOM/AREA IT RESIDES. WHEN THE ROOM/AREA IS VACANT, OCCUPANCY SENSOR WILL BE RESPONSIBLE FOR AUTOMATICALLY TURNING OFF THE RECEPTACLES WITH SUBSCRIPT "AR".
5. FIELD ADJUST CONVENIENCE RECEPTACLES SHOWN SO THAT AT LEAST ONE RECEPTACLE IS NO MORE THAN 2-3 FT FROM THE DEFIBRILLATOR WITHIN ITS RESPECTIVE ROOM.

POWER KEYNOTES

1. 30A DISCONNECT SWITCH FOR OVERHEAD DOOR.
2. RECEPTACLE FOR TIME ZONE CLOCK. COORDINATE MOUNTING HEIGHT WITH CLOCK LOCATION SUCH THAT RECEPTACLE IS HIDDEN BEHIND CLOCK.

KEY PLAN

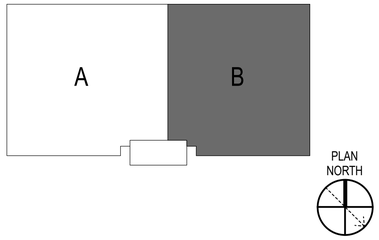

SYM	DESCRIPTION	DATE	APPR

NAVFAC

NORTH CAROLINA PROFESSIONAL SEAL 037183 ENGINEER EDWARD CHINNIS, JR.
6/25/2020
SEAL

HDR
440 S. CHURCH STREET, SUITE 1000
CHARLOTTE, NC 28202
TEL (704)338-6700
A/E INFO

APPROVED
FOR COMMANDER NAVFAC 7/10/2020
ACTIVITY
Approved by Emily Sylvester, Director of Installation Development Division
SATISFACTORY TO DATE 06/19/2020
DES EC DRW DJF CHK EC
PM/DM SGL/RMS
BRANCH MANAGER JAS
CHIEF ENG/ARCH EJA
FIRE PROTECTION

DEPARTMENT OF THE NAVY
NAVAL FACILITIES ENGINEERING COMMAND
NAVAL FACILITIES ENGINEERING COMMAND ~ MID-ATLANTIC
MIDLANT CI CORE
CAMP LEJEUNE - JACKSONVILLE, NC
MARSOC
JACKSONVILLE, NORTH CAROLINA
P1395 MARINE RAIDER HEADQUARTERS
FIRST FLOOR PLAN - POWER - AREA B

SCALE: AS NOTED
EPROJECT NO.: 1603164
CONSTR. CONTR. NO.
NAVFAC DRAWING NO. 12794403
SHEET 184 OF 228
EP102
DRAWFORM REVISION: 17 APRIL 2018

C:\vvt\2016\10136813-E-CENTRAL_P-1395 MARINE HQ_jeremy.forrest.rvt
6/25/2020 8:28:09 AM

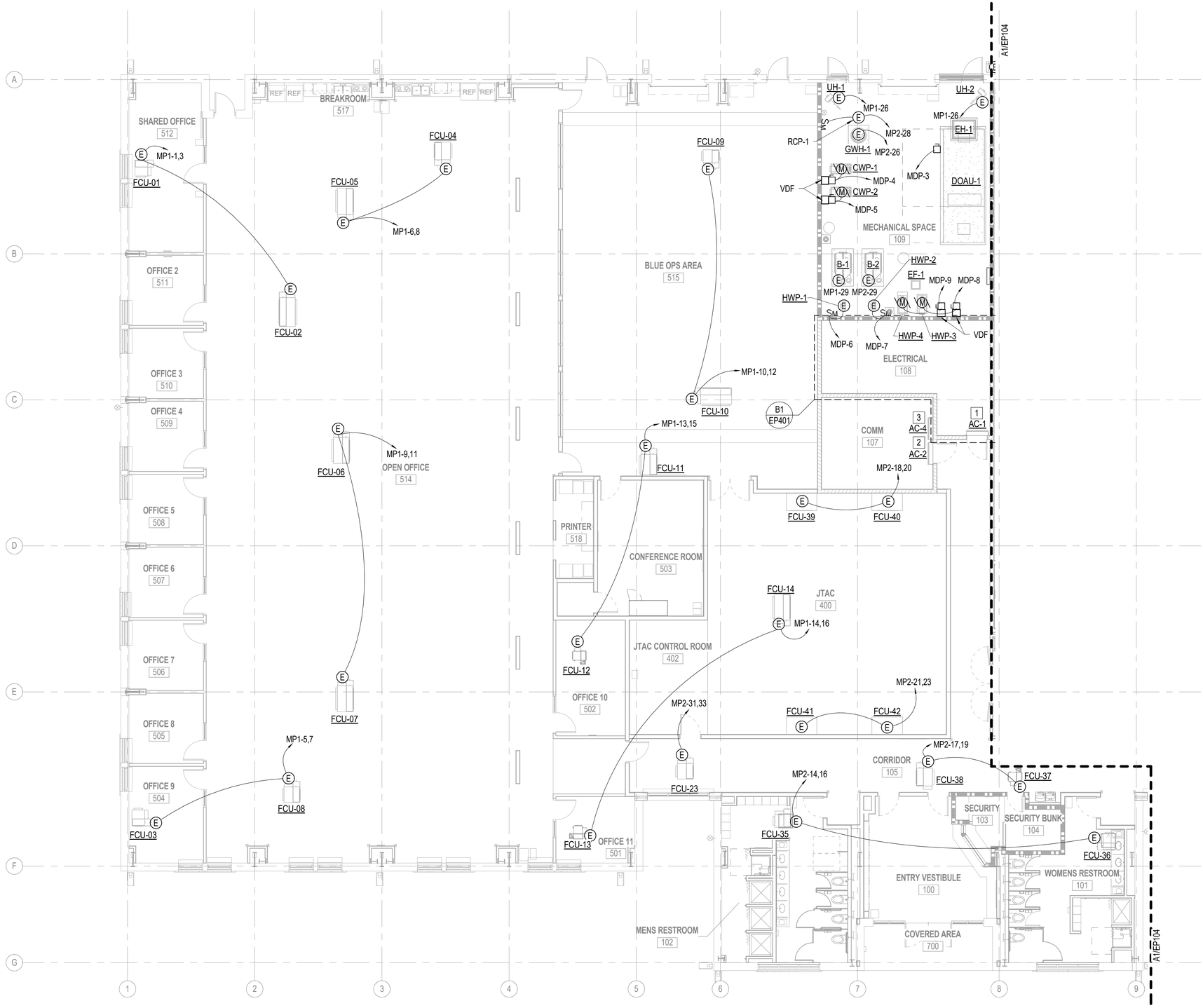

A1 1ST FLR POWER MECH CONNECTIONS PLAN - AREA A

1/8" = 1'-0"

0 4' 8' 16'

GENERAL NOTES

1. REFER TO PANEL SCHEDULES FOR CONDUIT AND WIRE SIZES.
2. DISCONNECTING MEANS TO MECHANICAL EQUIPMENT TO BE PROVIDED BY MECHANICAL CONTRACTOR, UNLESS OTHERWISE NOTED.

POWER KEYNOTES

1 AC-1 REQUIRES 208V, 1PH, 1A POWER SUPPLIED FROM CU-1. PROVIDE 3#12 IN 3/4" CONDUIT BETWEEN AC-1 AND CU-1.

2 AC-2 REQUIRES 208V, 1PH, 1A POWER SUPPLIED FROM CU-2. PROVIDE 3#12 IN 3/4" CONDUIT BETWEEN AC-2 AND CU-2.

3 AC-4 REQUIRES 208V, 1PH, 1A POWER SUPPLIED FROM CU-4. PROVIDE 3#12 IN 3/4" CONDUIT BETWEEN AC-4 AND CU-4. PRIOR TO ROUGH-IN, COORDINATE EXACT LOCATION OF AC-4 ONSITE TO AVOID POTENTIAL CONFLICTS WITH TELECOM PASSIVE INFRASTRUCTURE.

KEY PLAN

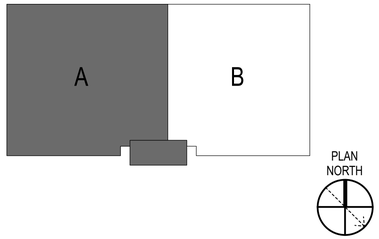

SYM	DESCRIPTION	DATE	APPR

NAVFAC

NORTH CAROLINA PROFESSIONAL SEAL 037183 ENGINEER EDWARD CHINNIS, JR.
6/25/2020
SEAL

HDR
440 S. CHURCH STREET, SUITE 1000
CHARLOTTE, NC 28202
TEL (704)338-6700
A/E INFO

APPROVED
FOR COMMANDER NAVFAC 7/10/2020

ACTIVITY
Approved by Emily Sylvester, Director of Installation Development Division

SATISFACTORY TO DATE 06/19/2020
DES EC DRW DJF CHK EC
PM/DM SGL/RMS
BRANCH MANAGER JAS
CHIEF ENG/ARCH EJA
FIRE PROTECTION

DEPARTMENT OF THE NAVY
NAVAL FACILITIES ENGINEERING COMMAND
NAVAL FACILITIES ENGINEERING COMMAND ~ MID-ATLANTIC
MIDLANT CI CORE
CAMP LEJEUNE - JACKSONVILLE, NC
MARSOC
JACKSONVILLE, NORTH CAROLINA
P1395 MARINE RAIDER HEADQUARTERS
FIRST FLOOR PLAN - MECHANICAL EQUIPMENT POWER - AREA A

SCALE: AS NOTED
EPROJECT NO.: 1603164
CONSTR. CONTR. NO.
NAVFAC DRAWING NO. 12794404
SHEET 185 OF 228
EP103

DRAWFORM REVISION: 17 APRIL 2018

C:\rvt\2016\10136813-E-CENTRAL_P-1395 MARINE HQ_jeremy.forrest.rvt
6/25/2020 8:28:13 AM

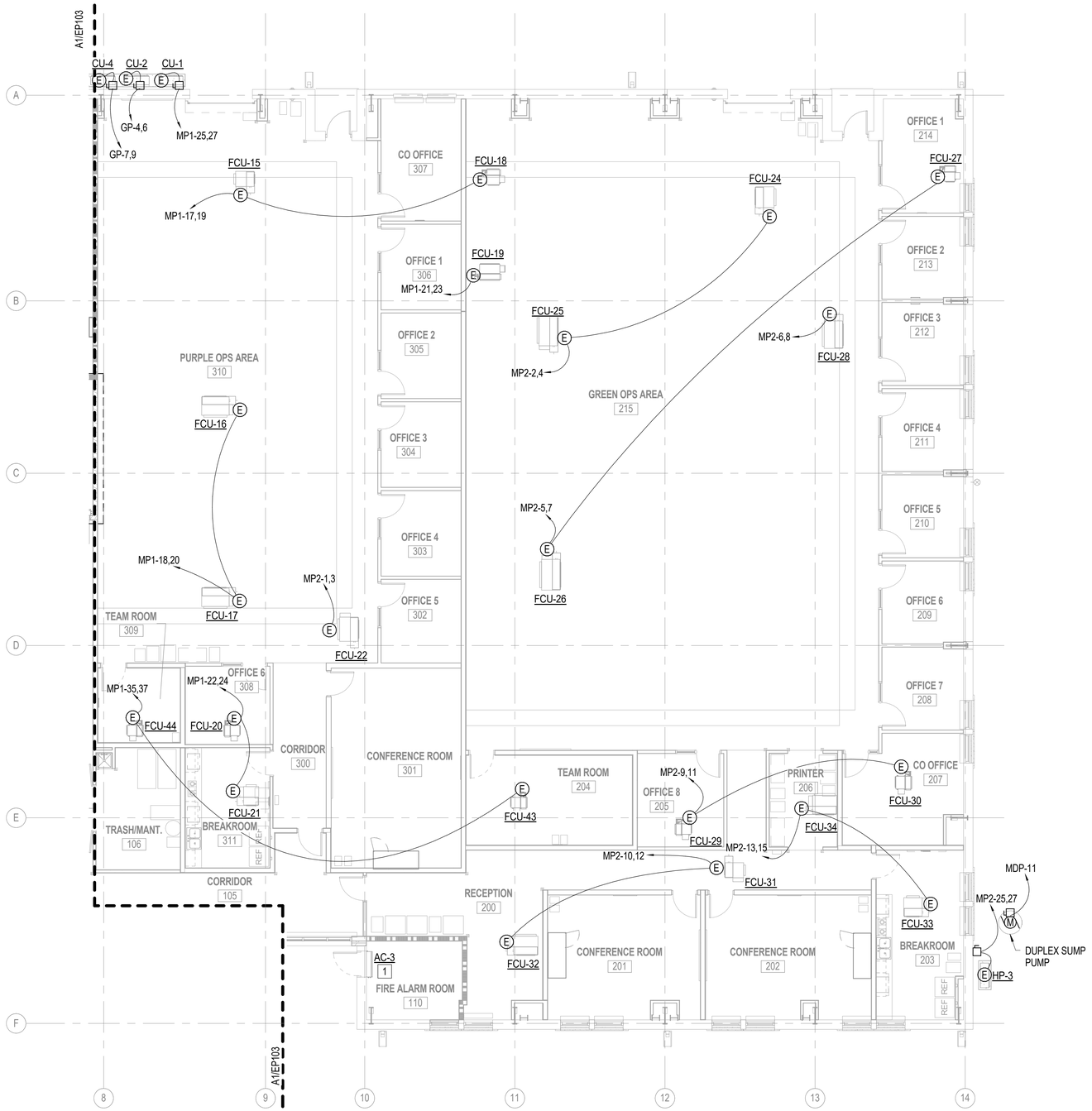

A1 1ST FLR POWER MECH CONNECTIONS PLAN - AREA B

1/8" = 1'-0"

0 4' 8' 16'

GENERAL NOTES

1. REFER TO PANEL SCHEDULES FOR CONDUIT AND WIRE SIZES.
2. DISCONNECTING MEANS TO MECHANICAL EQUIPMENT TO BE PROVIDED BY MECHANICAL CONTRACTOR, UNLESS OTHERWISE NOTED.

POWER KEYNOTES

1 AC-3 REQUIRES 208V, 1PH, 1A POWER SUPPLIED FROM CU-1. PROVIDE 3#12 IN 3/4" CONDUIT BETWEEN AC-3 AND CU-3.

KEY PLAN

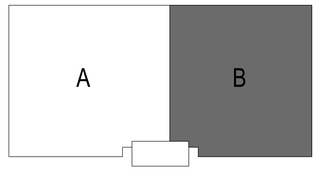

PLAN NORTH

SYM	DESCRIPTION	DATE	APPR

NAVFAC

NORTH CAROLINA PROFESSIONAL SEAL 037183 ENGINEER EDWARD CHINNIS, JR. 6/25/2020

HDR
440 S. CHURCH STREET, SUITE 1000
CHARLOTTE, NC 28202
TEL (704)338-6700
A/E INFO

APPROVED
FOR COMMANDER NAVFAC 7/10/2020
ACTIVITY
Approved by Emily Sylvester, Director of Installation Development Division
SATISFACTORY TO DATE 06/19/2020

DES	EC	DRW	DJF	CHK	EC
PM/DM	SGL/RMS				
BRANCH MANAGER	JAS				
CHIEF ENG/ARCH	EJA				
FIRE PROTECTION					

DEPARTMENT OF THE NAVY
NAVAL FACILITIES ENGINEERING COMMAND
MIDLANT CO CODE: MARSOC
NAVAL FACILITIES ENGINEERING COMMAND ~ MID-ATLANTIC
CAMP LEJEUNE · JACKSONVILLE, NC
JACKSONVILLE, NORTH CAROLINA
P1395 MARINE RAIDER HEADQUARTERS
FIRST FLOOR PLAN - MECHANICAL EQUIPMENT POWER - AREA B

SCALE:	AS NOTED
EPROJECT NO.:	1603164
CONSTR. CONTR. NO.	
NAVFAC DRAWING NO.	12794405
SHEET	186 OF 228

EP104

DRAWFORM REVISION: 17 APRIL 2018

C:\rvt\2016\19136813-E-CENTRAL_P-1395 MARINE HQ_jeremy.forrest.rvt
6/25/2020 8:28:16 AM

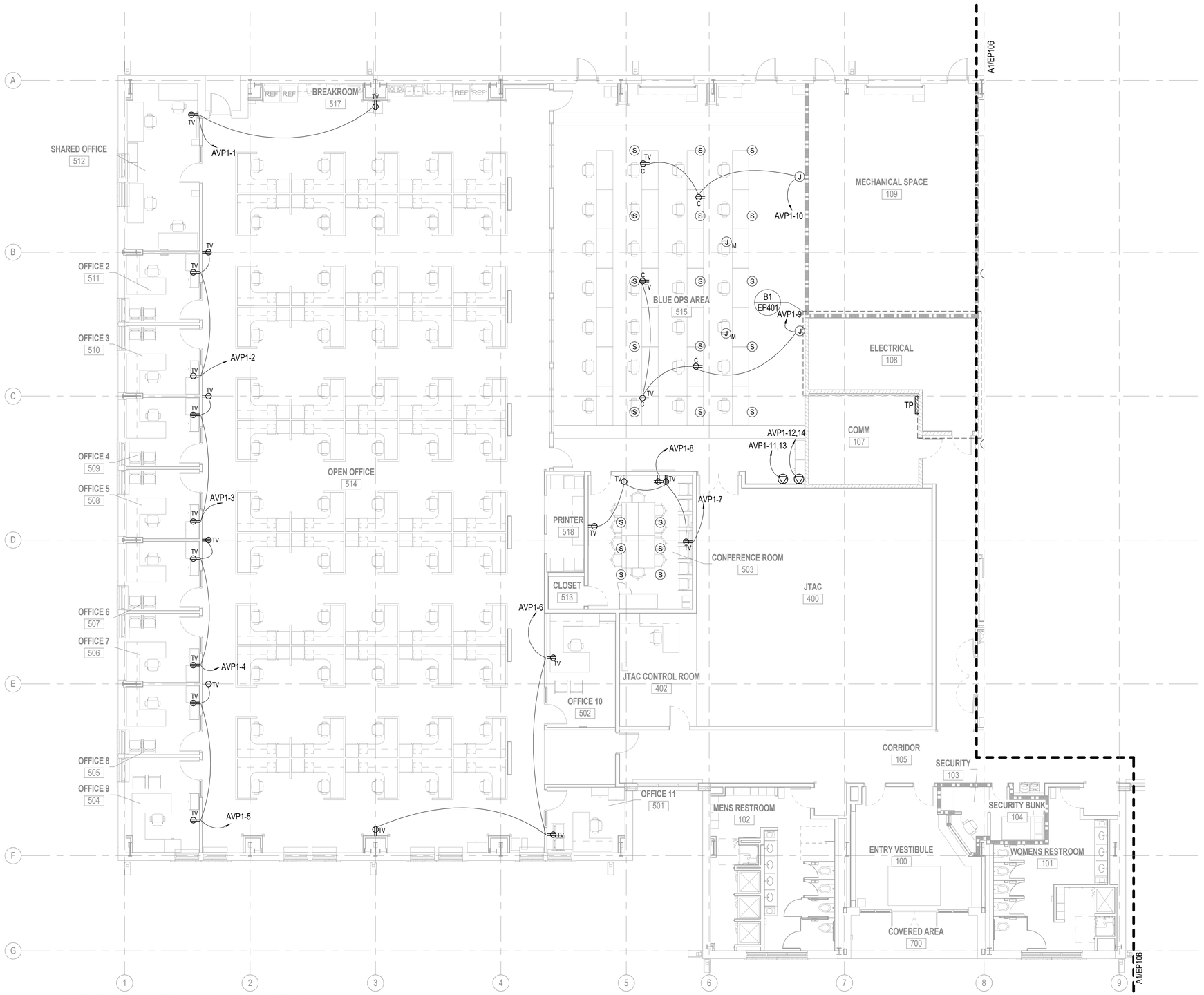

A1 1ST FLR POWER PLAN - AV - AREA A

1/8" = 1'-0"

0 4' 8' 16'

GENERAL NOTES

1. REFER TO PANEL SCHEDULES FOR CONDUIT AND WIRE SIZES.

KEY PLAN

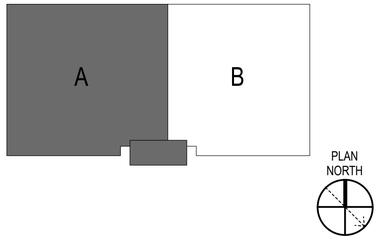

SYM	DESCRIPTION	DATE	APPR

NAVFAC

NORTH CAROLINA PROFESSIONAL SEAL 037183 ENGINEER EDWARD CHINNIS, JR.

6/25/2020

SEAL

HDR

440 S. CHURCH STREET, SUITE 1000
CHARLOTTE, NC 28202
TEL (704)338-6700

A/E INFO

APPROVED

FOR COMMANDER NAVFAC 7/10/2020

ACTIVITY

Approved by Emily Sylvester, Director of Installation Development Division

SATISFACTORY TO DATE 06/19/2020

DES EC DRW DJF CHK EC

PM/DM SGL/RMS

BRANCH MANAGER JAS

CHIEF ENG/ARCH EJA

FIRE PROTECTION

DEPARTMENT OF THE NAVY
NAVAL FACILITIES ENGINEERING COMMAND
NAVAL FACILITIES ENGINEERING COMMAND ~ MID-ATLANTIC
MIDLANT CI CORE
CAMP LEJEUNE - JACKSONVILLE, NC
MARSOC
JACKSONVILLE, NORTH CAROLINA
P1395 MARINE RAIDER HEADQUARTERS
FIRST FLOOR PLAN - AV EQUIPMENT POWER - AREA A

SCALE: AS NOTED

EPROJECT NO.: 1603164

CONSTR. CONTR. NO.

NAVFAC DRAWING NO. 12794406

SHEET 187 OF 228

EP105

DRAWFORM REVISION: 17 APRIL 2018

C:\vvt\2016\10136813-E-CENTRAL_P-1395 MARINE HQ_jeremy.forrest.rvt
6/25/2020 8:28:20 AM

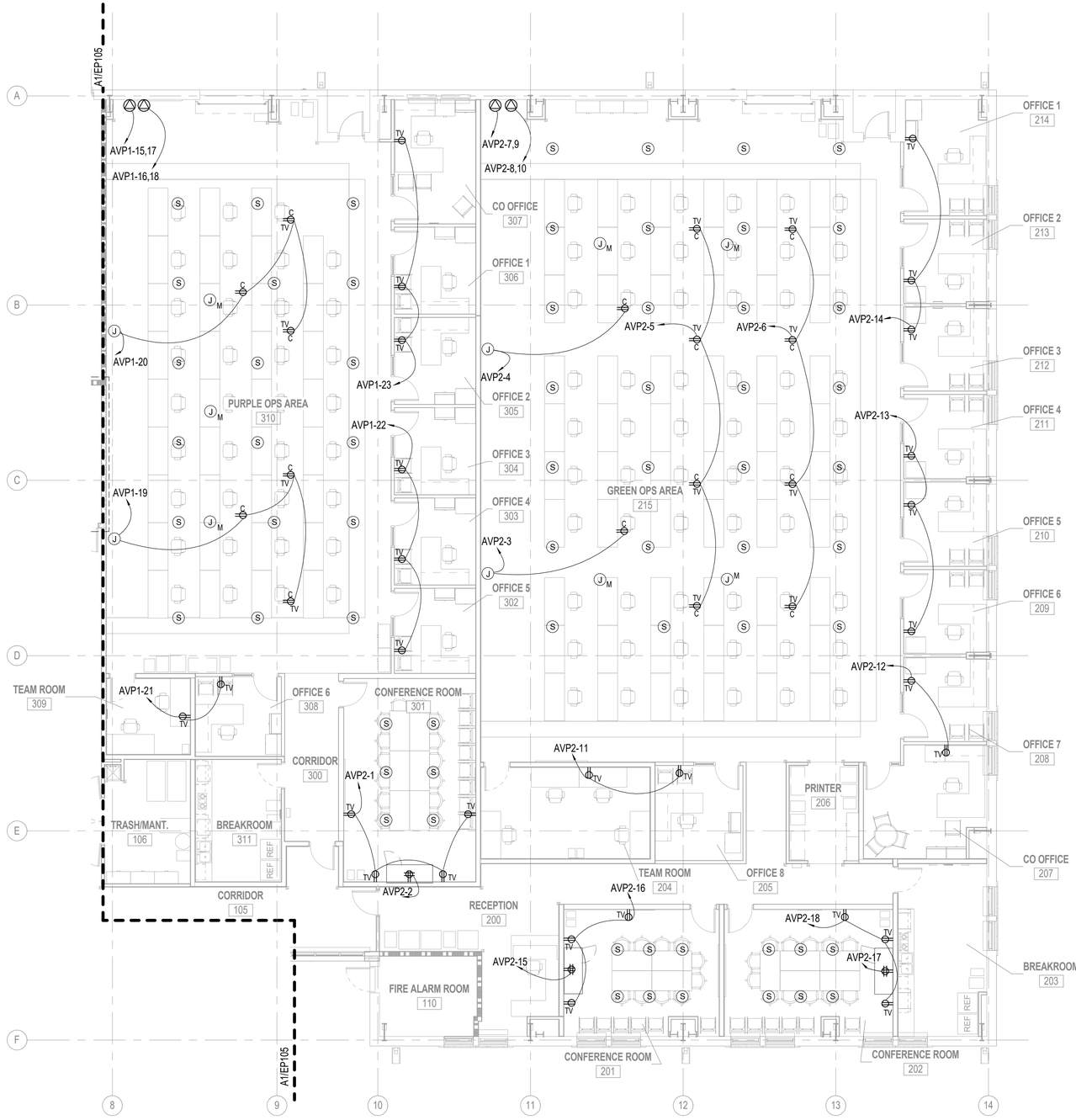

A1 1ST FLR POWER PLAN - AV - AREA B

1/8" = 1'-0"

0 4' 8' 16'

GENERAL NOTES

1. REFER TO PANEL SCHEDULES FOR CONDUIT AND WIRE SIZES.

KEY PLAN

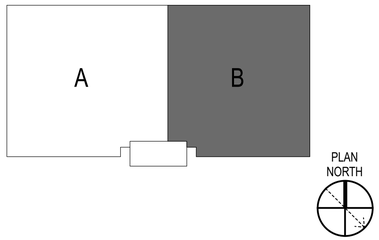

SYM	DESCRIPTION	DATE	APPR

NAVFAC

NORTH CAROLINA PROFESSIONAL SEAL 037183 ENGINEER EDWARD CHINNIS, JR.
6/25/2020
SEAL

HDR
440 S. CHURCH STREET, SUITE 1000
CHARLOTTE, NC 28202
TEL (704)338-6700
A/E INFO

APPROVED
FOR COMMANDER NAVFAC 7/10/2020
ACTIVITY
Approved by Emily Sylvester, Director of Installation Development Division
SATISFACTORY TO DATE 06/19/2020
DES EC DRW DJF CHK EC
PM/DM SGL/RMS
BRANCH MANAGER JAS
CHIEF ENG/ARCH EJA
FIRE PROTECTION

DEPARTMENT OF THE NAVY
NAVAL FACILITIES ENGINEERING COMMAND
MIDLANT CI CORE
NAVAL FACILITIES ENGINEERING COMMAND ~ MID-ATLANTIC
CAMP LEJEUNE - JACKSONVILLE, NC
MARSOC
JACKSONVILLE, NORTH CAROLINA
P1395 MARINE RAIDER HEADQUARTERS
FIRST FLOOR PLAN - AV EQUIPMENT POWER - AREA B

SCALE: AS NOTED
EPROJECT NO.: 1603164
CONSTR. CONTR. NO.
NAVFAC DRAWING NO. 12794407
SHEET 188 OF 228
EP106
DRAWFORM REVISION: 17 APRIL 2018

C:\rvt\2016\10136813-E-CENTRAL_P-1395 MARINE HQ_jeremy.forrest.rvt
6/25/2020 8:28:23 AM

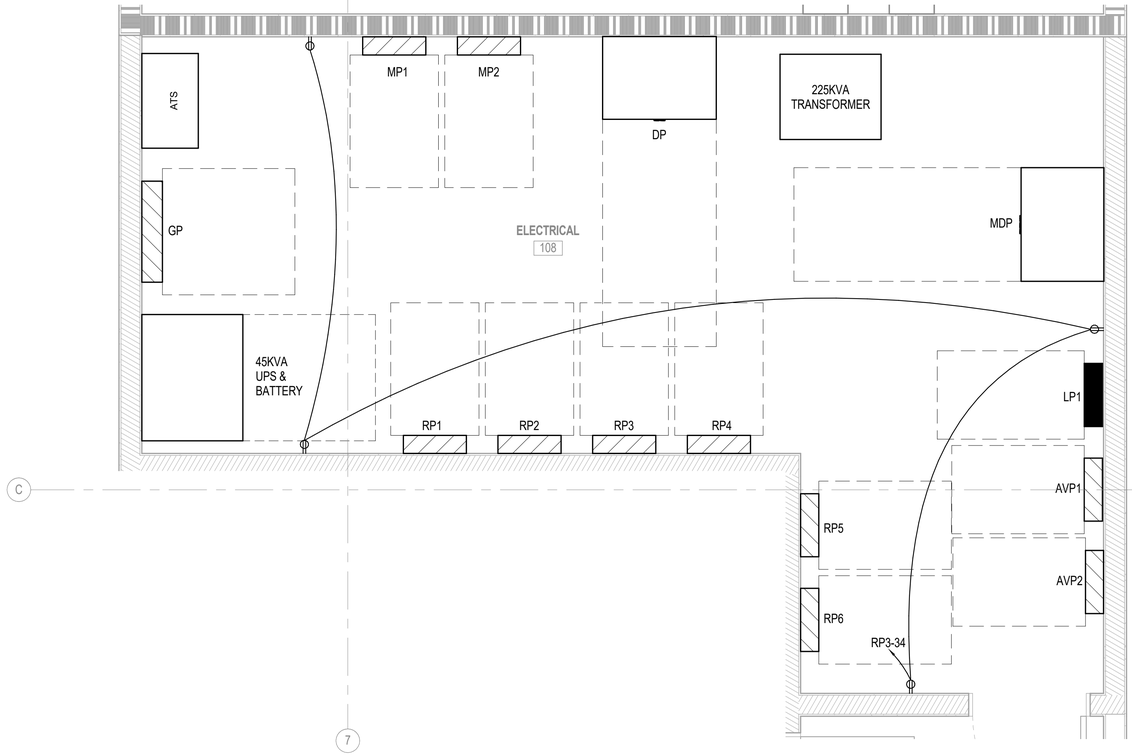

B1 ELECTRICAL ROOM 108 - ENLARGED PLAN

1/2" = 1'-0" (EP101)

PLAN NORTH

0 1' 2' 4'

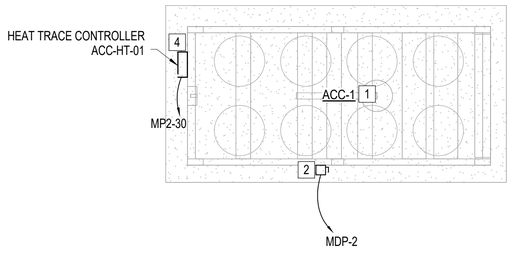

A1 MECHANICAL EQUIPMENT - ENLARGED PLAN

1/4" = 1'-0"

PLAN NORTH

0 2' 4' 8'

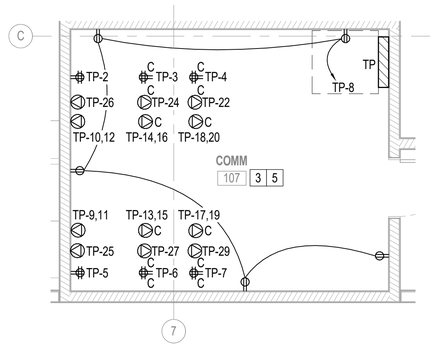

A3 COMM ROOM 107 - ENLARGED PLAN - POWER

1/4" = 1'-0" (EP101)

PLAN NORTH

0 2' 4' 8'

GENERAL NOTES

1. REFER TO POWER ONE-LINE AND PANEL SCHEDULES FOR POWER CONDUIT AND WIRE SIZES.
2. DISCONNECTING MEANS TO MECHANICAL EQUIPMENT TO BE PROVIDED BY MECHANICAL CONTRACTOR, UNLESS OTHERWISE NOTED.

NOTES

1 REFER TO ELECTRICAL SITE PLAN ES101, FOR ACC-1 LOCATION.

2 200A, NEMA 3R, FUSED DISCONNECT SWITCH PROVIDED WITH ACC-1 PACKAGE.

3 PRIOR TO ROUGH-IN, COORDINATE MOUNTING HEIGHT AND LOCATION OF ELECTRICAL DEVICES ONSITE TO AVOID POTENTIAL CONFLICTS WITH TELECOM PASSIVE INFRASTRUCTURE.

4 COORDINATE EXACT LOCATION OF HEAT TRACE CONTROLLER WITH MECHANICAL CONTRACTOR.

5 DEDICATED COMM RACK RECEPTACLES TO BE MOUNTED 6" ABOVE AND 6" NEAR THEIR RESPECTIVE COMM RACK. PROVIDE L5-30AMP RECEPTACLE FOR OUTLETS ON CIRCUITS TP-22, 24-27, AND 29.

SYM	DESCRIPTION	DATE	APPR

NAVFAC

NORTH CAROLINA PROFESSIONAL SEAL 037183 ENGINEER EDWARD CHINNIS, JR.
6/25/2020
SEAL

HDR
440 S. CHURCH STREET, SUITE 1000
CHARLOTTE, NC 28202
TEL (704)338-6700

A/E INFO

APPROVED
Joseph L. Sylvester, P.E.
FOR COMMANDER NAVFAC 7/10/2020

ACTIVITY
Approved by Emily Sylvester, Director of Installation Development Division

SATISFACTORY TO DATE 06/19/2020

DES	DRW	CHK
EC	DJF	EC

PM/DM SGL/RMS
BRANCH MANAGER JAS
CHIEF ENG/ARCH EJA
FIRE PROTECTION

DEPARTMENT OF THE NAVY
NAVAL FACILITIES ENGINEERING COMMAND
NAVAL FACILITIES ENGINEERING COMMAND ~ MID-ATLANTIC
MIDLANT CI CORE
CAMP LEJEUNE - JACKSONVILLE, NC
MARSOC
JACKSONVILLE, NORTH CAROLINA
P1395 MARINE RAIDER HEADQUARTERS
ENLARGED PLANS

SCALE: AS NOTED
EPROJECT NO.: 1603164
CONSTR. CONTR. NO.
NAVFAC DRAWING NO. 12794408
SHEET 189 OF 228
EP401

DRAWFORM REVISION: 17 APRIL 2018

C:\rvt\2016\10136813-E-CENTRAL_P-1395 MARINE HQ_jeremy.forrest.rvt
6/25/2020 8:28:26 AM

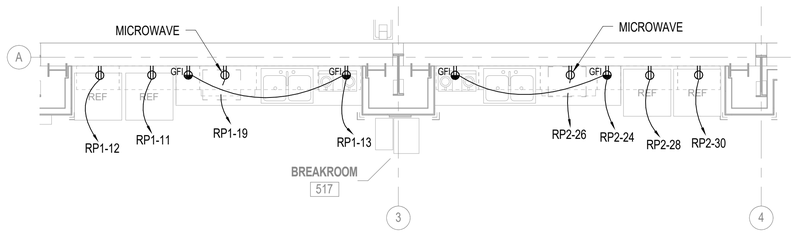

C2 BREAKROOM 517 - ENLARGED PLAN

1/4" = 1'-0" (EP101)

PLAN NORTH

0 2' 4' 8'

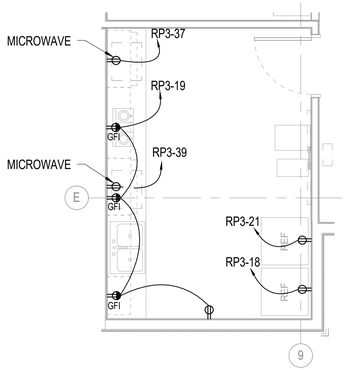

A1 BREAKROOM 311 - ENLARGED PLAN

1/4" = 1'-0" (EP102)

PLAN NORTH

0 2' 4' 8'

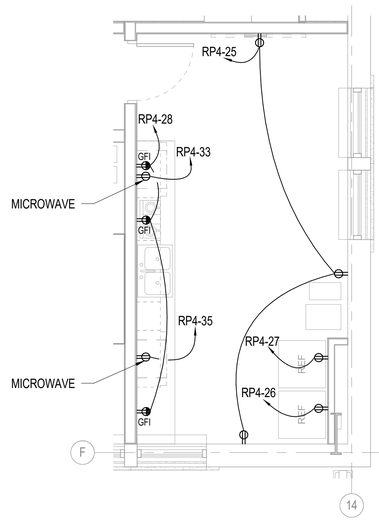

A3 BREAKROOM 203 - ENLARGED PLAN

1/4" = 1'-0" (EP102)

PLAN NORTH

0 2' 4' 8'

GENERAL NOTES

1. REFER TO POWER ONE-LINE AND PANEL SCHEDULES FOR POWER CONDUIT AND WIRE SIZES.

SYM	DESCRIPTION	DATE	APPR

NAVFAC

NORTH CAROLINA PROFESSIONAL SEAL 037183 ENGINEER EDWARD CHINNIS, JR.
6/25/2020

HDR
440 S. CHURCH STREET, SUITE 1000
CHARLOTTE, NC 28202
TEL (704)338-6700

A/E INFO

APPROVED
FOR COMMANDER NAVFAC 7/10/2020
ACTIVITY
Approved by Emily Sylvester, Director of Installation Development Division
SATISFACTORY TO DATE 06/19/2020

DES	EC	DRW	DJF	CHK	EC

PM/DM	SGL/RMS
BRANCH MANAGER	JAS
CHIEF ENG/ARCH	EJA
FIRE PROTECTION	

DEPARTMENT OF THE NAVY
NAVAL FACILITIES ENGINEERING COMMAND
NAVAL FACILITIES ENGINEERING COMMAND ~ MID-ATLANTIC
MIDLANT CI CORE
CAMP LEJEUNE - JACKSONVILLE, NC
MARSOC
JACKSONVILLE, NORTH CAROLINA
P1395 MARINE RAIDER HEADQUARTERS
ENLARGED PLANS

SCALE	AS NOTED
EPROJECT NO.	1603164
CONSTR. CONTR. NO.	
NAVFAC DRAWING NO.	12794409
SHEET	190 OF 228

EP402

DRAWFORM REVISION: 17 APRIL 2018

C:\n\r020161013\36813-E-CENTRAL_P-1395 MARINE HQ_jeremy.forrest.rvt
6/25/2020 8:28:29 AM

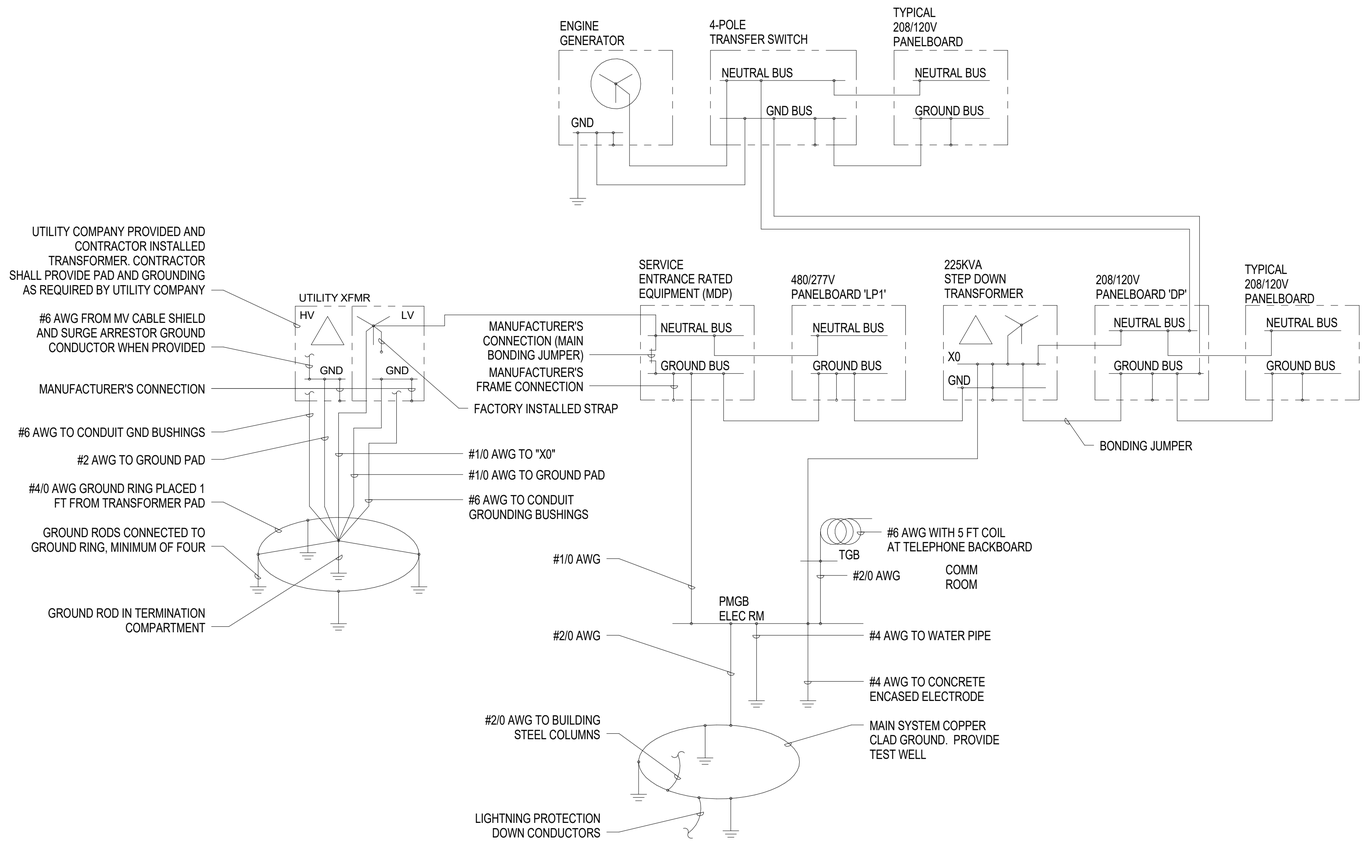

GROUND SYSTEM DETAIL NOTES:

1. ABBREVIATIONS:
   PMGB - 24" LONG POWER MAIN GROUNDING BAR.
   TMGB - 24" LONG TELEPHONE MAIN GROUNDING BAR.
2. ALL CONDUCTORS SIZES BASED ON COPPER.
3. REFER TO POWER RISER DIAGRAM FOR CONDUCTOR SIZES NOT SHOWN.
4. SEE ELECTRICAL SPECIFICATIONS FOR ADDITIONAL REQUIREMENTS.

B1 GROUNDING DIAGRAM

NTS

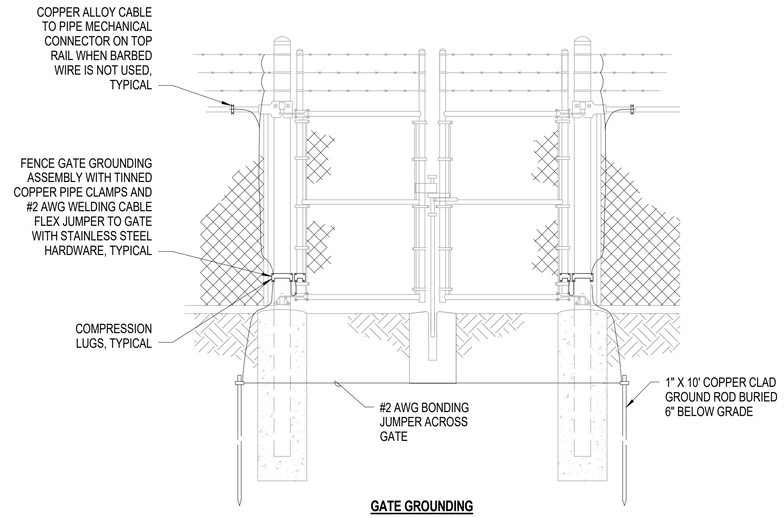

GATE GROUNDING

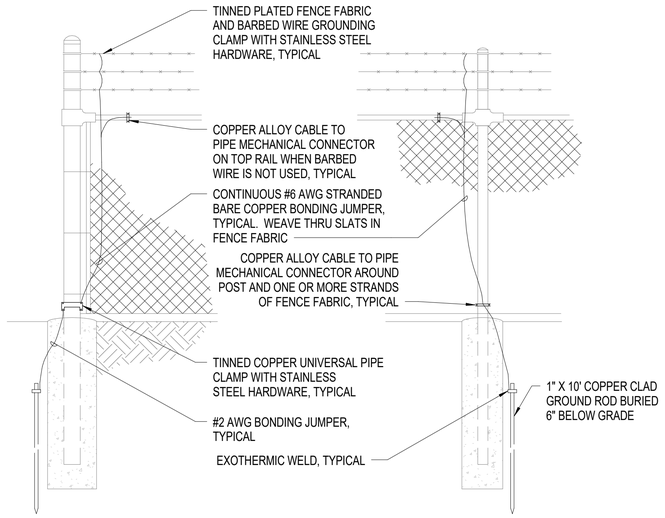

CORNER OR ANGLE POST GROUNDING **LINE POST GROUNDING**

B4 GATE AND FENCE GROUNDING DETAIL

NTS

SYM	DESCRIPTION	DATE	APPR

NAVFAC

NORTH CAROLINA PROFESSIONAL SEAL 037183 ENGINEER EDWARD CHINNIS, JR. 6/25/2020

HDR
440 S. CHURCH STREET, SUITE 1000
CHARLOTTE, NC 28202
TEL (704)338-6700
A/E INFO

APPROVED
FOR COMMANDER NAVFAC 7/16/2020
ACTIVITY
Approved by Emily Sylvester, Director of Installation Development Division
SATISFACTORY TO DATE 06/19/2020

DES	EC	DRW	DJF	CHK	EC

PM/DM	SGL/RMS
BRANCH MANAGER	JAS
CHIEF ENG/ARCH	EJA
FIRE PROTECTION	

DEPARTMENT OF THE NAVY
NAVAL FACILITIES ENGINEERING COMMAND ~ MID-ATLANTIC
MIDLANT CI CORE
IMARSOC
NAVAL FACILITIES ENGINEERING COMMAND ~ MID-ATLANTIC
CAMP LEJEUNE ~ JACKSONVILLE, NC
JACKSONVILLE, NORTH CAROLINA
P1395 MARINE RAIDER HEADQUARTERS
POWER DETAILS

SCALE: AS NOTED
EPROJECT NO.: 1603164
CONSTR. CONTR. NO.
NAVFAC DRAWING NO. 12794410
SHEET 191 OF 228

EP501

DRAWFORM REVISION: 17 APRIL 2018

C:\vk\20181101368\13-E-CENTRAL_P-1395 MARINE HQ_jeremy.forrest.rvt
6/25/2020 8:28:31 AM

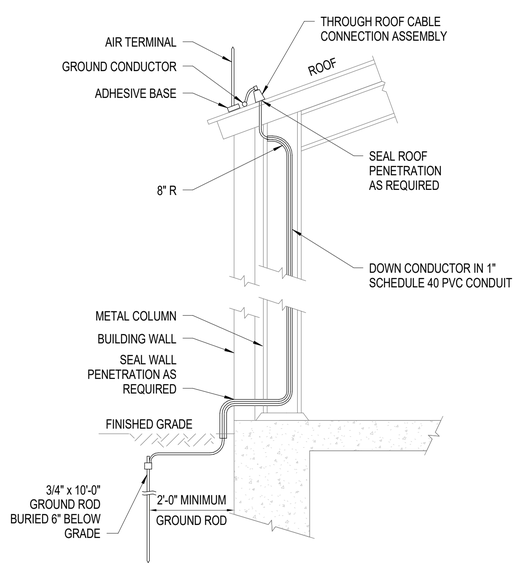

C1 TYPICAL DOWN CONDUCTOR DETAIL

NTS

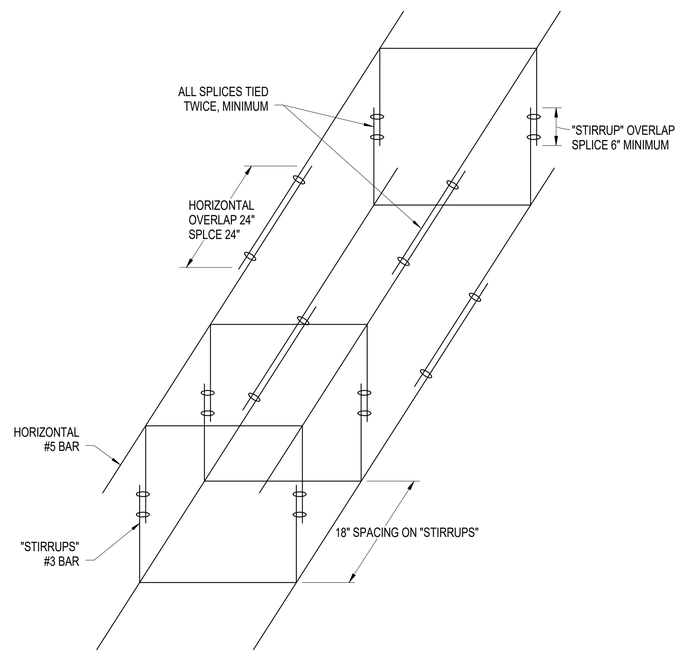

C3 UNDERGROUND DUCTBANK CONCRETE REINFORCING DETAIL

NTS



NOTES:

1. PROVIDE SELF-ADHESIVE VINYL LABEL TO AFFIX TO ELECTRICAL EQUIPMENT TO WARN OF ARC FLASH HAZARDS.
2. THE LABEL FORMAT AND TEXT SHALL BE IN ACCORDANCE WITH THE FIGURE.
3. THE LABEL SHALL BE LOCATED ON THE EQUIPMENT TO BE CLEARLY VISIBLE TO QUALIFIED PERSONS BEFORE EXAMINATION, ADJUSTMENT, SERVICING, OR MAINTENANCE OF THE EQUIPMENT.
4. THE SIZE OF THE LABEL SHALL BE:

EQUIPMENT TYPE	HEIGHT	WIDTH
INDOOR	2"	3"
OUTDOOR	3"	4.5"

5. A DOWNLOADABLE WINDOWS METAFILE IS AVAILABLE ON THE WHOLE BUILDING DESIGN GUIDE WEBSITE (WWW.WBDG.ORG) FOR USE IN A LABEL MAKING MACHINE.
   A. THE FILE IS LOCATED ON THE "NAVFAC CADD DETAILS" PAGE. TO NAVIGATE TO THIS LOCATION, FOLLOW: HOME> DOCUMENTS & REFERENCES> CCB> CADD LIBRARY> NAVFAC CADD RESOURCES> NAVFAC CADD DETAILS.
   B. ALTERNATIVELY, TYPE IN THE FOLLOWING ADDRESS IN INTERNET EXPLORER: HTTP://WWW.WBDG.ORG/CCB/BROWSE_CAT.PHP?C=232

GENERAL ARC FLASH WARNING LABEL

SKETCH DATE APRIL 2015 | STYLE AF-1

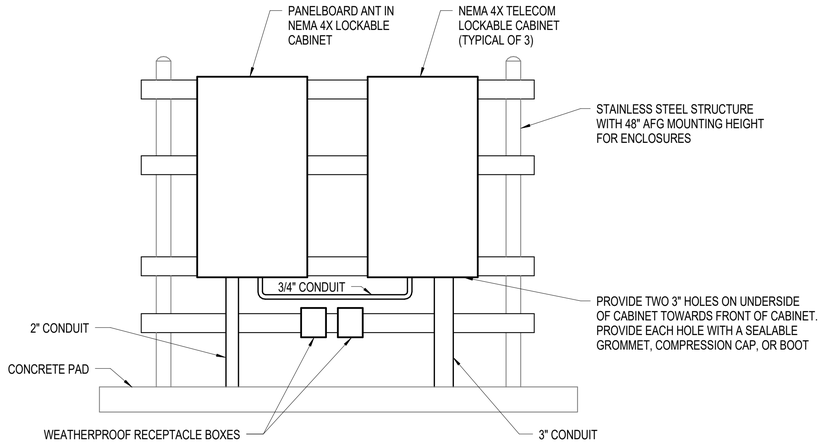

A1 EQUIPMENT MOUNTING STRUCTURE DETAIL

NTS

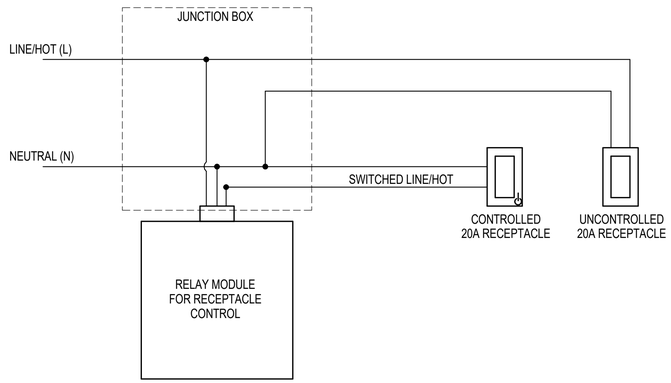

NOTE:

1. DO NOT USE CONTROLLED RECEPTACLE FOR LOADS THAT PRESENT A HAZARD (EX: HEATERS) IF AUTOMATICALLY ENERGIZED.

A3 AUTO AND NON-AUTO CONTROLLED RECPTACLES THAT SHARE THE SAME CIRCUIT RELAY MODULE WIRING DETAIL

NTS

APPR | DATE | SYM | DESCRIPTION

NAVFAC

NORTH CAROLINA PROFESSIONAL SEAL 037183 ENGINEER EDWARD CHINNIS, JR. 6/25/2020

HDR
440 S. CHURCH STREET, SUITE 1000
CHARLOTTE, NC 28202
TEL (704)338-6700

A/E INFO

APPROVED
FOR COMMANDER NAVFAC 7/10/2020
ACTIVITY
Approved by Emily Sylvester, Director of Installation Development Division
SATISFACTORY TO DATE 06/19/2020
DES EC | DRW DJF | CHK EC
PM/DM SGL/RMS
BRANCH MANAGER JAS
CHIEF ENG/ARCH EJA
FIRE PROTECTION

DEPARTMENT OF THE NAVY
NAVAL FACILITIES ENGINEERING COMMAND
MIDLANT CI CORE
MARSOC
NAVAL FACILITIES ENGINEERING COMMAND ~ MID-ATLANTIC
CAMP LEJEUNE · JACKSONVILLE, NC
JACKSONVILLE, NORTH CAROLINA
P1395 MARINE RAIDER HEADQUARTERS
POWER DETAILS

SCALE: AS NOTED
EPROJECT NO.: 1603164
CONSTR. CONTR. NO.
NAVFAC DRAWING NO. 12794411
SHEET 192 OF 228

EP502

DRAWFORM REVISION: 17 APRIL 2018

C:\rvt\2016\19136813-E-CENTRAL_P-1395 MARINE HQ_jeremy.forrest.rvt
6/25/2020 8:28:32 AM

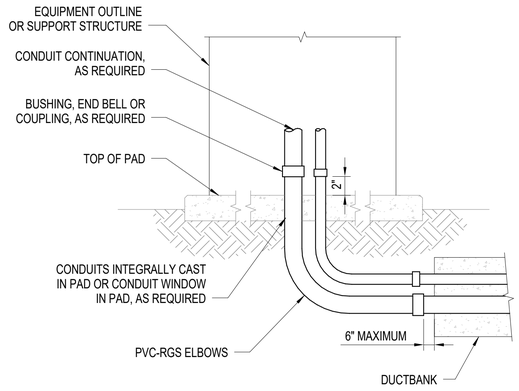

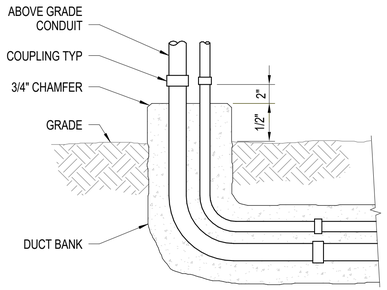

NOTES:

1. SEE CONCRETE ENCASED DUCTBANK FOR ADDITIONAL REQUIREMENTS.

C1 CONDUIT TRANSITION TO ABOVE GRADE (EXTERIOR)

NTS

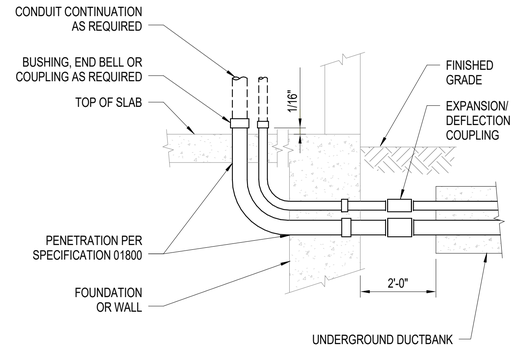

NOTE:

1. SEE DUCTBANK DETAIL FOR ADDITIONAL REQUIREMENTS.

C4 CONDUIT TRANSITION TO ABOVE GRADE (EXTERIOR TO INTERIOR)

NTS

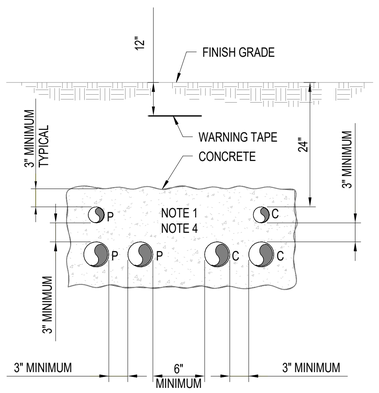

NOTES:

1. NUMBER OF CONDUITS AS REQUIRED FOR THE APPLICATION.
2. "P" SUBSCRIPT ELECTRICAL POWER OR CONTROL CONDUIT.
3. "C" SUBSCRIPT COMMUNICATION (TELEPHONE, DATA, INSTRUMENTATION) CONDUIT.
4. PROVIDE REBAR HORIZONTAL AND REBAR STIRRUPS WITHIN DUCTBANK. REFER TO "UNDERGROUND CONCRETE REINFORCING DETAIL" FOR ADDITIONAL INFORMATION.

A1 CONCRETE ENCASED DUCTBANK

NTS

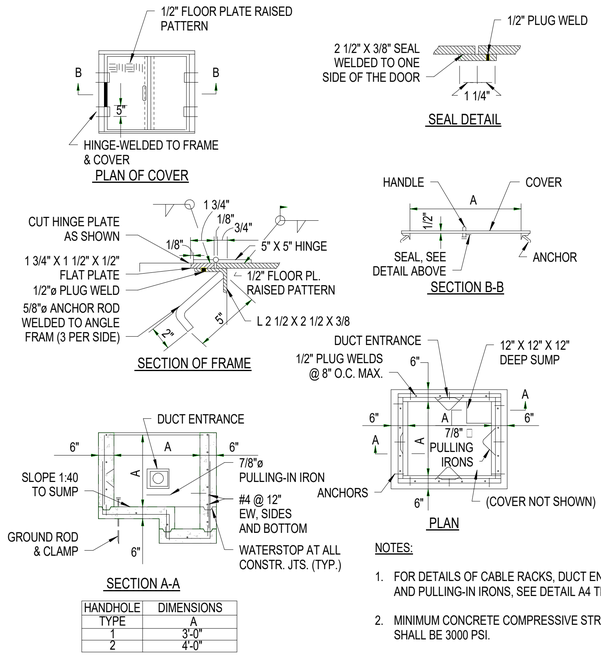

HANDHOLE TYPE	DIMENSIONS A
1	3'-0"
2	4'-0"

NOTES:

1. FOR DETAILS OF CABLE RACKS, DUCT ENTRANCE AND PULLING-IN IRONS, SEE DETAIL A4 THIS SHEET.
2. MINIMUM CONCRETE COMPRESSIVE STRENGTH SHALL BE 3000 PSI.

A2 STANDARD ELECTRICAL HANDHOLE DETAIL (NONTRAFFIC) TYPES 1 & 2

NTS

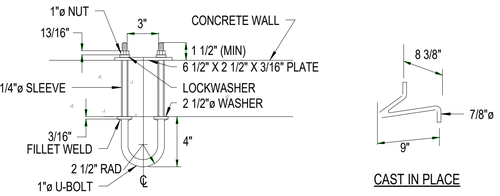

NOTE
ALL METAL PARTS SHALL BE HOT DIP GALVANIZED

DETAIL OF PULLING-IN IRON

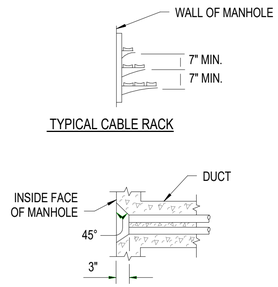

A4 DETAILS (PULLING-IN IRON, CABLE RACK AND DUCT ENTRANCE)

NTS

NO.	SYM	DESCRIPTION	DATE	APPR

NAVFAC

NORTH CAROLINA PROFESSIONAL SEAL 037183 ENGINEER EDWARD CHINNIS, JR.
6/25/2020

HDR
440 S. CHURCH STREET, SUITE 1000
CHARLOTTE, NC 28202
TEL (704)338-6700
A/E INFO

APPROVED
FOR COMMANDER NAVFAC 7/01/2020
ACTIVITY
Approved by Emily Sylvester, Director of Installation Development Division
SATISFACTORY TO DATE 06/19/2020

DES	EC	DRW	DJF	CHK	EC

PM/DM SGL/RMS
BRANCH MANAGER JAS
CHIEF ENG/ARCH EJA
FIRE PROTECTION

DEPARTMENT OF THE NAVY
NAVAL FACILITIES ENGINEERING COMMAND
MIDLANT CI CORPE
MARSOC
NAVAL FACILITIES ENGINEERING COMMAND ~ MID-ATLANTIC
CAMP LEJEUNE ~ JACKSONVILLE NC
JACKSONVILLE, NORTH CAROLINA
P1395 MARINE RAIDER HEADQUARTERS
POWER DETAILS

SCALE: AS NOTED
EPROJECT NO.: 1603164
CONSTR. CONTR. NO.
NAVFAC DRAWING NO. 12794412
SHEET 193 OF 228

EP503

DRAWFORM REVISION: 17 APRIL 2018

C:\e420181010136613-E-CENTRAL_P-1395 MARINE HQ_jeremy.forrest.rvt
6/26/2020 8:28:35 AM

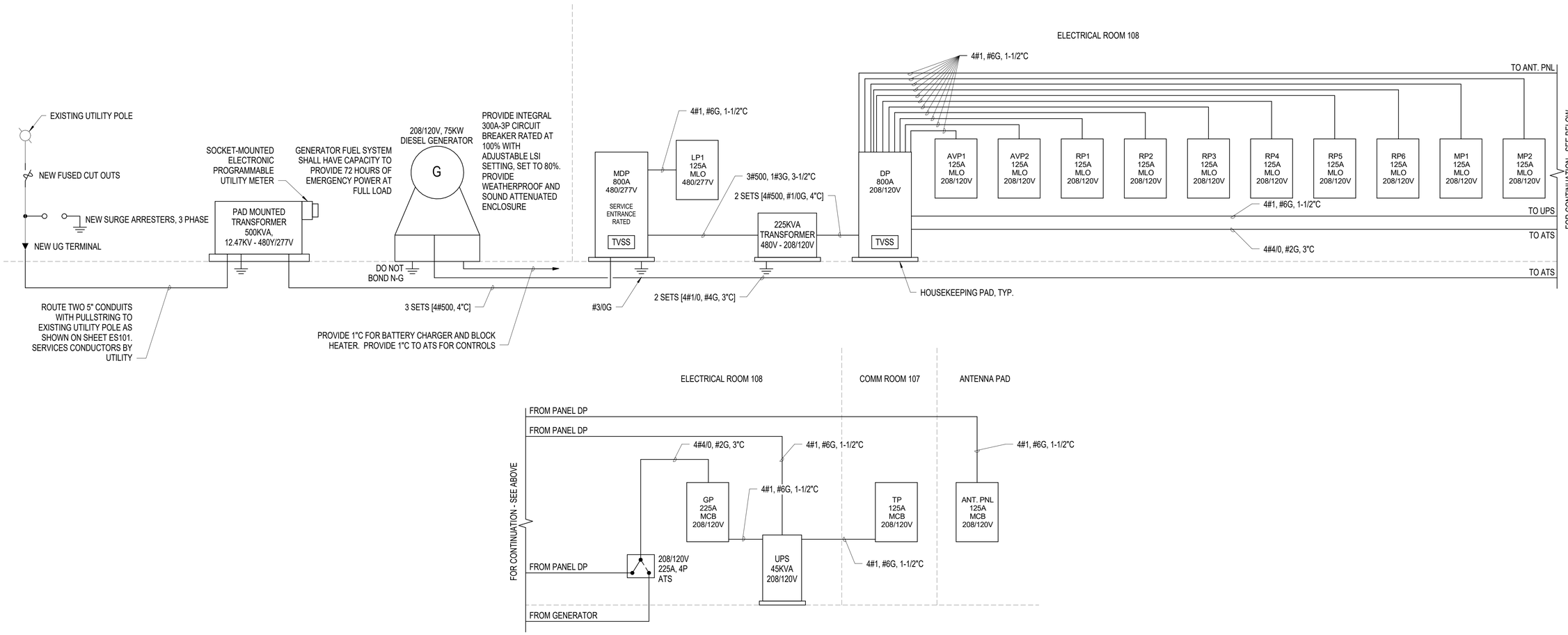

B1 POWER RISER DIAGRAM

NTS

GENERAL NOTES

1. ENSURE COMMUNICATION BETWEEN GENERATOR AND UPS SO THAT THE UPS RECOGNIZES WHEN IT IS OPERATING ON GENERATOR. IN ADDITION, ALLOW UPS BATTERIES TO CHARGE WHILE UPS OPERATES ON A GENERATOR SOURCE.
2. UPS TO BE DENOTED AS O&M FUNDED.

SYM	DESCRIPTION	DATE	APPR

NAVFAC

NORTH CAROLINA PROFESSIONAL SEAL 037183 ENGINEER EDWARD CHINNIS, JR.
6/25/2020
SEAL

HDR
440 S. CHURCH STREET, SUITE 1000
CHARLOTTE, NC 28202
TEL (704)338-6700
A/E INFO

APPROVED
FOR COMMANDER NAVFAC 7/10/2020
ACTIVITY
Approved by Emily Sylvester, Director of Installation Development Division
SATISFACTORY TO DATE 06/19/2020
DES EC DRW DJF CHK EC
PM/DM SGL/RMS
BRANCH MANAGER JAS
CHIEF ENG/ARCH EJA
FIRE PROTECTION

DEPARTMENT OF THE NAVY
NAVAL FACILITIES ENGINEERING COMMAND
NAVAL FACILITIES ENGINEERING COMMAND ~ MID-ATLANTIC
MIDLANT CI CORE
CAMP LEJEUNE - JACKSONVILLE, NC
MARSOC
JACKSONVILLE, NORTH CAROLINA
P1395 MARINE RAIDER HEADQUARTERS
POWER RISER DIAGRAM

SCALE: AS NOTED
EPROJECT NO.: 1603164
CONSTR. CONTR. NO.
NAVFAC DRAWING NO. 12794413
SHEET 194 OF 228
EP601
DRAWFORM REVISION: 17 APRIL 2018

C:\rvt\2016\10136813-E-CENTRAL_P-1395 MARINE HQ_jeremy.forrest.rvt
6/25/2020 8:28:35 AM

SWITCHBOARD NO: MDP

VOLTAGE (L-L):	480	**BUS RATING (A):**	1000	**ENCLOSURE:**	NEMA 1
VOLTAGE (L-N):	277	**MAIN OC DEVICE (A/PHASE):**	800	**MOUNTING:**	FREE STANDING, FRONT ACCESS
PHASE / WIRE:	3 / 4+G	**INTERRUPTING RATING (KA):**	65 KAIC	**LOCATION:**	ELECTRICAL ROOM - 108
200% NEUTRAL:	NO	**SERVICE ENTRANCE LABEL:**	YES	**BUILDING:**	P1395

WIRING				CKT		CONNECTED LOAD (VA)				OCP			OCP		CONNECTED LOAD (VA)					CKT	WIRING			
PHASE	NEUT.	GRND.	COND.	NO.	DESCRIPTION	LTS	REC	MECH	MISC	AMPS	P		AMPS	P	LTS	REC	MECH	MISC	DESCRIPTION	NO.	PHASE	NEUT.	GRND.	COND.
						7,330						A					600								
*	*	*	*	1	LP1	5,300				125	3	B	20	3			600		DUPLEX SUMP PUMP	11	12		12	3/4"
						4,700						C					600								
								37,300				A				68,060	18,020							
3/0		6	2-1/2"	2	ACC-1			37,300		200	3	B	350	3		62,500	17,810		DP PANEL VIA 225KVA TRANSFORMER	12	*	*	*	*
								37,300				C				53,680	17,810							
								2,100				A												
10		10	3/4"	3	DOAU-1			2,100		30	3	B	125	3					SPARE	13				
								2,100				C												
								2,100				A												
12		12	3/4"	4	CWP-1			2,100		20	3	B	20	3					SPARE	14				
								2,100				C												
								2,100				A												
12		12	3/4"	5	CWP-2			2,100		20	3	B	15	3					SPARE	15				
								2,100				C												
								820				A												
12		12	3/4"	6	HWP-1			820		15	3	B		3					SPACE	16				
								820				C												
								820				A												
12		12	3/4"	7	HWP-2			820		15	3	B		3					SPACE	17				
								820				C												
								2,100				A												
12		12	3/4"	8	HWP-3			2,100		20	3	B		3					SPACE	18				
								2,100				C												
								2,100				A												
12		12	3/4"	9	HWP-4			2,100		20	3	B		3					SPACE	19				
								2,100				C												
												A												
				10	SPARE					30	3	B	60	3					SPD (TVSS)	20	6	6	6	1"
												C												

NOTES:

LOAD SUMMARY

	LTS	REC	MECH	MISC**	SPARE	TOTAL
CONNECTED LOAD (KVA)	17.3	184.2	203.8	0.0	---	405.3
DEMAND FACTOR	0.75	NEC	0.70	---		---
DESIGN LOAD (KVA)	13.0	97.1	142.6	1.6	0.0	254.3

480	LINE-TO-LINE VOLTS	PHASE A (KVA)	138
488	CONNECTED AMPS	PHASE B (KVA)	131
306	DESIGN AMPS	PHASE C (KVA)	121

NOTES:
* REFER TO ONE-LINE DIAGRAM
** MISC DEMAND INCLUDES 25% OF LARGEST MOTOR KVA

SWITCHBOARD NO: DP

VOLTAGE (L-L):	208	**BUS RATING (A):**	800	**ENCLOSURE:**	NEMA 1
VOLTAGE (L-N):	120	**MAIN OC DEVICE (A/PHASE):**	800	**MOUNTING:**	FREE STANDING, FRONT ACCESS
PHASE / WIRE:	3 / 4+G	**INTERRUPTING RATING (KA):**	35 KAIC	**LOCATION:**	ELECTRICAL ROOM - 108
200% NEUTRAL:	NO	**SERVICE ENTRANCE LABEL:**	NO	**BUILDING:**	P1395

WIRING				CKT		CONNECTED LOAD (VA)				OCP			OCP		CONNECTED LOAD (VA)					CKT	WIRING			
PHASE	NEUT.	GRND.	COND.	NO.	DESCRIPTION	LTS	REC	MECH	MISC	AMPS	P		AMPS	P	LTS	REC	MECH	MISC	DESCRIPTION	NO.	PHASE	NEUT.	GRND.	COND.
						0	8,640	0	500			A			0	0	8,180	0							
*	*	*	*	1	RP1	0	8,820	0	0	125	3	B	125	3	0	0	7,070	0	MP1	11	*	*	*	*
						0	6,780	0	0			C			0	0	8,210	0							
						0	9,900	0	0			A			0	0	8,220	0							
*	*	*	*	2	RP2	0	7,980	0	0	125	3	B	125	3	0	1,080	7,500	0	MP2	12	*	*	*	*
						0	7,440	0	500			C			0	900	7,980	0							
						0	11,660	0	0			A			0	3,720	0	0							
*	*	*	*	3	RP3	0	11,940	0	0	125	3	B	125	3	0	2,720	0	0	ANT. PANEL	13	*	*	*	*
						0	10,500	0	0			C			0	1,720	0	0							
						0	11,040	0	0			A			0	9,780	1,620	2,800							
*	*	*	*	4	RP4	0	10,640	0	0	125	3	B	225	3	0	8,880	3,240	1,700	GENERATOR PANEL GP VIA THE ATS	14	*	*	*	*
						0	8,820	0	0			C			0	8,880	1,620	1,400							
						0	6,480	0	2,760			A													
*	*	*	*	5	RP5	0	6,480	0	2,760	125	3	B	125	3					UPS BYPASS	15	*	*	*	*
						0	6,480	0	800			C													
						0	6,840	0	0			A													
*	*	*	*	6	RP6	0	3,960	0	2,760	125	3	B		3					SPACE	16					
						0	2,160	0	2,760			C													
						0	9,720	0	0			A													
*	*	*	*	7	AVP1	0	9,020	0	0	125	3	B		3					SPACE	17					
						0	7,920	0	0			C													
						0	6,840	0	0			A													
*	*	*	*	8	AVP2	0	7,560	0	0	125	3	B		3					SPACE	18					
						0	5,040	0	0			C													
												A													
				9	SPARE					125	3	B		3					SPACE	19					
												C													
												A													
				10	SPARE					125	3	B	60	3					SPD (TVSS)	20	6	6	6	1"
												C													

NOTES:

LOAD SUMMARY

	LTS	REC	MECH	MISC**	SPARE	TOTAL
CONNECTED LOAD (KVA)	0.0	230.3	53.6	18.7	---	302.7
DEMAND FACTOR	1.25	1.00	1.00	1.00		---
DESIGN LOAD (KVA)	0.0	230.3	53.6	18.7	0.0	302.7

208	LINE-TO-LINE VOLTS	PHASE A (KVA)	92
840	CONNECTED AMPS	PHASE B (KVA)	88
840	DESIGN AMPS	PHASE C (KVA)	77

NOTES:
* REFER TO ONE-LINE DIAGRAM
** MISC DEMAND INCLUDES 25% OF LARGEST MOTOR KVA

SYM	DESCRIPTION	DATE	APPR

NAVFAC

NORTH CAROLINA PROFESSIONAL SEAL 037183 ENGINEER EDWARD CHINNIS, JR.
6/25/2020
SEAL

HDR
440 S. CHURCH STREET, SUITE 1000
CHARLOTTE, NC 28202
TEL (704)338-6700
A/E INFO

APPROVED
Jeanne E. Hindman, P.E.
FOR COMMANDER NAVFAC 7/10/2020
ACTIVITY
Approved by Emily Sylvester, Director of Installation Development Division
SATISFACTORY TO DATE 06/19/2020
DES EC | DRW DJF | CHK EC
PM/DM SGL/RMS
BRANCH MANAGER JAS
CHIEF ENG/ARCH EJA
FIRE PROTECTION

DEPARTMENT OF THE NAVY
NAVAL FACILITIES ENGINEERING COMMAND ~ MID-ATLANTIC
MIDLANT CI CORE
NAVAL FACILITIES ENGINEERING COMMAND
CAMP LEJEUNE · JACKSONVILLE, NC
MARSOC
JACKSONVILLE, NORTH CAROLINA
P1395 MARINE RAIDER HEADQUARTERS
PANELBOARD SCHEDULES

SCALE: AS NOTED
EPROJECT NO.: 1603164
CONSTR. CONTR. NO.
NAVFAC DRAWING NO. 12794414
SHEET 195 OF 228

EP602

DRAWFORM REVISION: 17 APRIL 2018

C:\rvt\2016\019\3693-SE-CENTRAL_P-1395 MARINE HQ_jeremy.forrest.rvt
6/25/2020 8:28:37 AM

PANELBOARD NO: RP1

VOLTAGE (L-L):	208	**BUS RATING (A):**	125	**ENCLOSURE:**	NEMA 1
VOLTAGE (L-N):	120	**MAIN OC DEVICE (A/PHASE):**	MLO	**MOUNTING:**	SURFACE
PHASE / WIRE:	3 / 4+G	**INTERRUPTING RATING (KA):**	22	**LOCATION:**	ELECTRICAL ROOM - 108
200% NEUTRAL:	NO	**SERVICE ENTRANCE LABEL:**	NO	**BUILDING:**	P1395

WIRING				CKT		CONNECTED LOAD (VA)				OCP			OCP		CONNECTED LOAD (VA)					CKT	WIRING			
PHASE	NEUT.	GRND.	COND.	NO.	DESCRIPTION	LTS	REC	MECH	MISC	AMPS	P		AMPS	P	LTS	REC	MECH	MISC	DESCRIPTION	NO.	PHASE	NEUT.	GRND.	COND.
10	10	10	3/4"	1	SHARED OFFICE 512		1,260			20	1	A	20	1		1,260			SHARED OFFICE 512	2	10	10	10	3/4"
10	10	10	3/4"	3	OFFICE 511		1,260			20	1	B	20	1		1,260			OFFICE 510	4	10	10	10	3/4"
10	10	10	3/4"	5	OFFICE 509		1,440			20	1	C	20	1		1,260			OFFICE 508	6	10	10	10	3/4"
10	10	10	3/4"	7	OFFICE 507		1,440			20	1	A	20	1		1,440			OFFICE 506	8	10	10	10	3/4"
10	10	10	3/4"	9	OFFICE 505		1,260			20	1	B	20	1		1,440			OFFICE 504	10	10	10	10	3/4"
10	10	10	3/4"	11	BREAKROOM 517 REF.		600			20	1	C	20	1		600			BREAKROOM 517 REF	12	10	10	10	3/4"
10	10	10	3/4"	13	BREAKROOM 517		360		500	20	1	A	20	1					SPARE	14				
12	12	12	3/4"	15	CONF ROOM 503		360			20	1	B	20	1		720			OPEN OFFICE 514	16	10	10	10	3/4"
10	10	10	3/4"	17	OFFICE 501		1,260			20	1	C	20	1		1,080			RECEPTION 500	18	10	10	10	3/4"
10	10	10	3/4"	19	BREAKROOM 517 MICRO.		1,440			20	1	A	20	1		1,260			OFFICE 502	20	10	10	10	3/4"
12	12	12	3/4"	21	CONF ROOM 503		1,080			20	1	B	20	1		1,260			CONF ROOM 503	22	12	12	12	3/4"
12	12	12	3/4"	23	CONF ROOM 503		540			20	1	C	20	1					SPARE	24				
12	12	12	3/4"	25	SHREDDER		180			20	1	A	20	1					SPARE	26				
12	12	12	3/4"	27	SHREDDER		180			20	1	B	20	1					SPARE	28				
				29	SPARE					20	1	C	20	1					SPARE	30				
				31	SPARE					20	1	A	20	1					SPARE	32				
				33	SPARE					20	1	B	20	1					SPARE	34				
				35	SPARE					20	1	C	20	1					SPARE	36				
				37	SPARE					20	1	A								38				
				39	SPARE					20	1	B	30	3					SPD (TVSS)	40	10	10	10	3/4"
				41	SPARE					20	1	C								42				

NOTES:

LOAD SUMMARY

	LTS	REC	MECH	MISC**	SPARE	TOTAL			PHASE BALANCE	
CONNECTED LOAD (KVA)	0.0	24.2	0.0	0.5	---	24.7	208	LINE-TO-LINE VOLTS	PHASE A (KVA)	9
DEMAND FACTOR	1.25	1.00	---	1.00	20%	---	69	CONNECTED AMPS	PHASE B (KVA)	9
DESIGN LOAD (KVA)	0.0	17.1	0.0	0.5	4.9	22.6	63	DESIGN AMPS	PHASE C (KVA)	7

NOTES:
* REFER TO ONE-LINE DIAGRAM
** MISC DEMAND INCLUDES 25% OF LARGEST MOTOR KVA

PANELBOARD NO: RP2

VOLTAGE (L-L):	208	**BUS RATING (A):**	125	**ENCLOSURE:**	NEMA 1
VOLTAGE (L-N):	120	**MAIN OC DEVICE (A/PHASE):**	MLO	**MOUNTING:**	SURFACE
PHASE / WIRE:	3 / 4+G	**INTERRUPTING RATING (KA):**	22	**LOCATION:**	ELECTRICAL ROOM - 108
200% NEUTRAL:	NO	**SERVICE ENTRANCE LABEL:**	NO	**BUILDING:**	P1395

WIRING				CKT		CONNECTED LOAD (VA)				OCP			OCP		CONNECTED LOAD (VA)					CKT	WIRING			
PHASE	NEUT.	GRND.	COND.	NO.	DESCRIPTION	LTS	REC	MECH	MISC	AMPS	P		AMPS	P	LTS	REC	MECH	MISC	DESCRIPTION	NO.	PHASE	NEUT.	GRND.	COND.
10	10	10	3/4"	1	OPEN OFFICE 514 CUB.		720			20	1	A	20	1		1,080			OPEN OFFICE 514 CUB.	2	10	10	10	3/4"
10	10	10	3/4"	3	OPEN OFFICE 514 CUB.		720			20	1	B	20	1		1,080			OPEN OFFICE 514 CUB.	4	10	10	10	3/4"
10	10	10	3/4"	5	OPEN OFFICE 514 CUB.		720			20	1	C	20	1		1,080			OPEN OFFICE 514 CUB.	6	10	10	10	3/4"
10	10	10	3/4"	7	OPEN OFFICE 514 CUB.		720			20	1	A	20	1		1,080			OPEN OFFICE 514 CUB.	8	10	10	10	3/4"
10	10	10	3/4"	9	OPEN OFFICE 514 CUB.		720			20	1	B	20	1		1,080			OPEN OFFICE 514 CUB.	10	10	10	10	3/4"
10	10	10	3/4"	11	OPEN OFFICE 514 CUB.		720			20	1	C	20	1		1,080			OPEN OFFICE 514 CUB.	12	10	10	10	3/4"
10	10	10	3/4"	13	OPEN OFFICE 514 CUB.		720			20	1	A	20	1		1,080			OPEN OFFICE 514 CUB.	14	10	10	10	3/4"
10	10	10	3/4"	15	OPEN OFFICE 514 CUB.		720			20	1	B	20	1		1,080			OPEN OFFICE 514 CUB.	16	10	10	10	3/4"
10	10	10	3/4"	17	OPEN OFFICE 514 CUB.		720			20	1	C	20	1		1,080			OPEN OFFICE 514 CUB.	18	10	10	10	3/4"
10	10	10	3/4"	19	OPEN OFFICE 514 CUB.		720			20	1	A	20	1		1,080			OPEN OFFICE 514 CUB.	20	10	10	10	3/4"
10	10	10	3/4"	21	OPEN OFFICE 514 CUB.		720			20	1	B	20	1					SPARE	22				
10	10	10	3/4"	23	OPEN OFFICE 514 CUB.		720			20	1	C	20	1		360		500	BREAKROOM 517	24	10	10	10	3/4"
10	10	10	3/4"	25	OPEN OFFICE 514 CUB.		1,080			20	1	A	20	1		1,440			BREAKROOM 517 MICRO	26	10	10	10	3/4"
10	10	10	3/4"	27	OPEN OFFICE 514 CUB.		1,080			20	1	B	20	1		600			BREAKROOM 517 REF	28	10	10	10	3/4"
12	12	12	3/4"	29	COPIER		180			20	1	C	20	1		600			BREAKROOM 517 REF	30	10	10	10	3/4"
12	12	12	3/4"	31	COPIER		180			20	1	A	20	1					SPARE	32				
12	12	12	3/4"	33	SHREDDER		180			20	1	B	20	1					SPARE	34				
12	12	12	3/4"	35	SHREDDER		180			20	1	C	20	1					SPARE	36				
				37	SPARE					20	1	A								38				
				39	SPARE					20	1	B	30	3					SPD (TVSS)	40	10	10	10	3/4"
				41	SPARE					20	1	C								42				

NOTES:

LOAD SUMMARY

	LTS	REC	MECH	MISC**	SPARE	TOTAL			PHASE BALANCE	
CONNECTED LOAD (KVA)	0.0	25.3	0.0	0.5	---	25.8	208	LINE-TO-LINE VOLTS	PHASE A (KVA)	10
DEMAND FACTOR	1.25	1.00	---	1.00	20%	---	72	CONNECTED AMPS	PHASE B (KVA)	8
DESIGN LOAD (KVA)	0.0	17.7	0.0	0.5	5.2	23.3	65	DESIGN AMPS	PHASE C (KVA)	8

NOTES:
* REFER TO ONE-LINE DIAGRAM
** MISC DEMAND INCLUDES 25% OF LARGEST MOTOR KVA

PANELBOARD NO: RP3

VOLTAGE (L-L):	208	**BUS RATING (A):**	125	**ENCLOSURE:**	NEMA 1
VOLTAGE (L-N):	120	**MAIN OC DEVICE (A/PHASE):**	MLO	**MOUNTING:**	SURFACE
PHASE / WIRE:	3 / 4+G	**INTERRUPTING RATING (KA):**	22	**LOCATION:**	ELECTRICAL ROOM - 108
200% NEUTRAL:	NO	**SERVICE ENTRANCE LABEL:**	NO	**BUILDING:**	P1395

WIRING				CKT		CONNECTED LOAD (VA)				OCP			OCP		CONNECTED LOAD (VA)					CKT	WIRING			
PHASE	NEUT.	GRND.	COND.	NO.	DESCRIPTION	LTS	REC	MECH	MISC	AMPS	P		AMPS	P	LTS	REC	MECH	MISC	DESCRIPTION	NO.	PHASE	NEUT.	GRND.	COND.
10	10	10	3/4"	1	OFFICE 307		1,260			20	1	A	20	1		1,440			OFFICE 306	2	10	10	10	3/4"
12	12	12	3/4"	3	OFFICE 305		1,440			20	1	B	20	1		1,260			OFFICE 304	4	12	12	12	3/4"
12	12	12	3/4"	5	OFFICE 303		1,440			20	1	C	20	1		1,440			OFFICE 302	6	12	12	12	3/4"
				7	SPARE					20	1	A	20	1		180			PRINTER ROOM 310	8	10	10	10	3/4"
12	12	12	3/4"	9	TEAM ROOM 309		360			20	1	B	20	1		1,260			CONF ROOM 301	10	10	10	10	3/4"
10	10	10	3/4"	11	CONF ROOM 301		1,080			20	1	C	20	1		540			CONF ROOM 301	12	10	10	10	3/4"
12	12	12	3/4"	13	OFFICE 308		1,440			20	1	A	20	1		1,080			TEAM ROOM 309	14	12	12	12	3/4"
12	12	12	3/4"	15	TRASH/MAINT 106		360			20	1	B	20	1		720			PURPLE OPS 310	16	12	12	12	3/4"
10	10	10	3/4"	17	PURPLE OPS 310		1,080			20	1	C	20	1		600			BREAKROOM 311 REF	18	12	12	12	3/4"
12	12	12	3/4"	19	BREAKROOM 311		1,220			20	1	A	20	1					SPARE	20				
12	12	12	3/4"	21	BREAKROOM 311 REF		600			20	1	B	20	1		1,080			PURPLE OPS 310	22	12	12	12	3/4"
12	12	12	3/4"	23	PURPLE OPS 310		1,080			20	1	C	20	1		1,080			PURPLE OPS 310	24	12	12	12	3/4"
12	12	12	3/4"	25	PURPLE OPS 310		1,080			20	1	A	20	1		1,080			PURPLE OPS 310	26	12	12	12	3/4"
12	12	12	3/4"	27	PURPLE OPS 310		1,080			20	1	B	20	1		1,080			PURPLE OPS 310	28	12	12	12	3/4"
12	12	12	3/4"	29	PURPLE OPS 310		1,080			20	1	C	20	1		720			CORRIDOR 105	30	12	12	12	3/4"
10	10	10	3/4"	31	SECURITY 103-104		900			20	1	A	20	1		540			WOMENS RESTROOM 101	32	10	10	10	3/4"
10	10	10	3/4"	33	MENS RESTROOM 102		540			20	1	B	20	1		720			ELECTRICAL 108	34	12	12	12	3/4"
12	12	12	3/4"	35	WATER COOLER		360			20	1	C	20	1					SPARE	36				
12	12	12	3/4"	37	BREAKRM 311 MICRO		1,440			20	1	A								38				
12	12	12	3/4"	39	BREAKRM 311 MICRO		1,440			20	1	B	30	3					SPD (TVSS)	40	10	10	10	3/4"
				41	SPARE					20	1	C								42				

NOTES:

LOAD SUMMARY

	LTS	REC	MECH	MISC**	SPARE	TOTAL			PHASE BALANCE	
CONNECTED LOAD (KVA)	0.0	34.1	0.0	0.0	---	34.1	208	LINE-TO-LINE VOLTS	PHASE A (KVA)	12
DEMAND FACTOR	1.25	1.00	---	---	20%	---	95	CONNECTED AMPS	PHASE B (KVA)	12
DESIGN LOAD (KVA)	0.0	22.1	0.0	0.0	6.8	28.9	80	DESIGN AMPS	PHASE C (KVA)	11

NOTES:
* REFER TO ONE-LINE DIAGRAM
** MISC DEMAND INCLUDES 25% OF LARGEST MOTOR KVA

PANELBOARD NO: RP4

VOLTAGE (L-L):	208	**BUS RATING (A):**	125	**ENCLOSURE:**	NEMA 1
VOLTAGE (L-N):	120	**MAIN OC DEVICE (A/PHASE):**	MLO	**MOUNTING:**	SURFACE
PHASE / WIRE:	3 / 4+G	**INTERRUPTING RATING (KA):**	22	**LOCATION:**	ELECTRICAL ROOM - 108
200% NEUTRAL:	NO	**SERVICE ENTRANCE LABEL:**	NO	**BUILDING:**	P1395

WIRING				CKT		CONNECTED LOAD (VA)				OCP			OCP		CONNECTED LOAD (VA)					CKT	WIRING			
PHASE	NEUT.	GRND.	COND.	NO.	DESCRIPTION	LTS	REC	MECH	MISC	AMPS	P		AMPS	P	LTS	REC	MECH	MISC	DESCRIPTION	NO.	PHASE	NEUT.	GRND.	COND.
8	8	8	3/4"	1	OFFICE 214		1,260			20	1	A	20	1		1,260			OFFICE 213	2	8	8	8	3/4"
8	8	8	3/4"	3	GREEN OPS 215		900			20	1	B	20	1		1,260			OFFICE 212	4	8	8	8	3/4"
10	10	10	3/4"	5	OFFICE 211		1,260			20	1	C	20	1					SPARE	6				
10	10	10	3/4"	7	OFFICE 210		1,260			20	1	A	20	1		1,260			OFFICE 209	8	10	10	10	3/4"
8	8	8	3/4"	9	OFFICE 208		1,260			20	1	B	20	1		720			TEAM ROOM 204	10	12	12	12	3/4"
8	8	8	3/4"	11	OFFICE 207		1,260			20	1	C	20	1		360			TEAM ROOM 204	12	12	12	12	3/4"
10	10	10	3/4"	13	GREEN OPS 215		1,080			20	1	A	20	1		1,080			OFFICE 205	14	10	10	10	3/4"
10	10	10	3/4"	15	TEAM ROOM 204		720			20	1	B	20	1		720			GREEN OPS 215	16	12	12	12	3/4"
10	10	10	3/4"	17	GREEN OPS 215		1,260			20	1	C	20	1		1,260			RECEPTION 200	18	10	10	10	3/4"
10	10	10	3/4"	19	CONF ROOM 201		1,080			20	1	A	20	1		1,260			CONF ROOM 201	20	10	10	10	3/4"
10	10	10	3/4"	21	CONF ROOM 201		540			20	1	B	20	1		1,260			CONF ROOM 202	22	8	8	8	3/4"
8	8	8	3/4"	23	CONF ROOM 202		1,080			20	1	C	20	1		540			CONF ROOM 202	24	8	8	8	3/4"
8	8	8	3/4"	25	BREAKROOM 203		540			20	1	A	20	1		600			BREAKROOM 203 REF	26	8	8	8	3/4"
8	8	8	3/4"	27	BREAKROOM 203 REF		600			20	1	B	20	1		1,040			BREAKROOM 203	28	8	8	8	3/4"
10	10	10	3/4"	29	PRINTER 206		180			20	1	C	20	1		180			PRINTER 206	30	10	10	10	3/4"
10	10	10	3/4"	31	PRINTER 206		180			20	1	A	20	1		180			PRINTER 206	32	10	10	10	3/4"
8	8	8	3/4"	33	BREAKRM 203 MICRO		1,440			20	1	B	20	1		180			PRINTER 206	34	10	10	10	3/4"
8	8	8	3/4"	35	BREAKRM 203 MICRO		1,440			20	1	C	20	1					SPARE	36				
				37	SPARE					20	1	A								38				
				39	SPARE					20	1	B	30	3					SPD (TVSS)	40	10	10	10	3/4"
				41	SPARE					20	1	C								42				

NOTES:

LOAD SUMMARY

	LTS	REC	MECH	MISC**	SPARE	TOTAL			PHASE BALANCE	
CONNECTED LOAD (KVA)	0.0	30.5	0.0	0.0	---	30.5	208	LINE-TO-LINE VOLTS	PHASE A (KVA)	11
DEMAND FACTOR	1.25	1.00	---	---	20%	---	85	CONNECTED AMPS	PHASE B (KVA)	11
DESIGN LOAD (KVA)	0.0	20.3	0.0	0.0	6.1	26.4	73	DESIGN AMPS	PHASE C (KVA)	9

NOTES:
* REFER TO ONE-LINE DIAGRAM
** MISC DEMAND INCLUDES 25% OF LARGEST MOTOR KVA

SYM | DESCRIPTION | DATE | APPR

NAVFAC

NORTH CAROLINA PROFESSIONAL SEAL 037183 ENGINEER EDWARD CHINNIS, JR.
6/25/2020
SEAL

HDR
440 S. CHURCH STREET, SUITE 1000
CHARLOTTE, NC 28202
TEL (704)338-6700
A/E INFO

APPROVED
James E. Donahue, R.A.
FOR COMMANDER NAVFAC 7/10/2020
ACTIVITY
Approved by Emily Sylvester, Director of Installation Development Division
SATISFACTORY TO DATE 06/19/2020
DES EC | DRW DJF | CHK EC
PM/DM SGL/RMS
BRANCH MANAGER JAS
CHIEF ENG/ARCH EJA
FIRE PROTECTION

DEPARTMENT OF THE NAVY
NAVAL FACILITIES ENGINEERING COMMAND
NAVAL FACILITIES ENGINEERING COMMAND ~ MID-ATLANTIC
MIDLANT CI CORE
CAMP LEJEUNE - JACKSONVILLE, NC
MARSOC
JACKSONVILLE, NORTH CAROLINA
P1395 MARINE RAIDER HEADQUARTERS
PANELBOARD SCHEDULES

SCALE: AS NOTED
EPROJECT NO.: 1603164
CONSTR. CONTR. NO.
NAVFAC DRAWING NO. 12794415
SHEET 196 OF 228
EP603
DRAWFORM REVISION: 17 APRIL 2018

C:\rvt\2016\10136813-E-CENTRAL_P-1395 MARINE HQ_jeremy.forrest.rvt
6/25/2020 8:28:40 AM

PANELBOARD NO: RP5

VOLTAGE (L-L):	208	BUS RATING (A):	125	ENCLOSURE:	NEMA 1
VOLTAGE (L-N):	120	MAIN OC DEVICE (A/PHASE):	MLO	MOUNTING:	SURFACE
PHASE / WIRE:	3 / 4+G	INTERRUPTING RATING (KA):	22	LOCATION:	ELECTRICAL ROOM - 108
200% NEUTRAL:	NO	SERVICE ENTRANCE LABEL:	NO	BUILDING:	P1395

WIRING PHASE	WIRING NEUT.	WIRING GRND.	WIRING COND.	CKT NO.	DESCRIPTION	CONNECTED LOAD (VA) LTS	REC	MECH	MISC	OCP AMPS	P		OCP AMPS	P	CONNECTED LOAD (VA) LTS	REC	MECH	MISC	DESCRIPTION	CKT NO.	WIRING PHASE	NEUT.	GRND.	COND.
10	10	10	3/4"	1	GREEN OPS 215		1,080			20	1	A	20	1		1,080			GREEN OPS 215	2	10	10	10	3/4"
10	10	10	3/4"	3	GREEN OPS 215		1,080			20	1	B	20	1		1,080			GREEN OPS 215	4	10	10	10	3/4"
10	10	10	3/4"	5	GREEN OPS 215		1,080			20	1	C	20	1		1,080			GREEN OPS 215	6	10	10	10	3/4"
10	10	10	3/4"	7	GREEN OPS 215		1,080			20	1	A	20	1		1,080			GREEN OPS 215	8	10	10	10	3/4"
10	10	10	3/4"	9	GREEN OPS 215		1,080			20	1	B	20	1		1,080			GREEN OPS 215	10	10	10	10	3/4"
10	10	10	3/4"	11	GREEN OPS 215		1,080			20	1	C	20	1		1,080			GREEN OPS 215	12	10	10	10	3/4"
10	10	10	3/4"	13	GREEN OPS 215		1,080			20	1	A	20	1		1,080			GREEN OPS 215	14	10	10	10	3/4"
10	10	10	3/4"	15	GREEN OPS 215		1,080			20	1	B	20	1		1,080			GREEN OPS 215	16	10	10	10	3/4"
10	10	10	3/4"	17	GREEN OPS 215		1,080			20	1	C	20	1		1,080			GREEN OPS 215	18	10	10	10	3/4"
12	12	12	3/4"	19	ROLLUP DOOR				1,380	20	2	A	20	2				1,380	ROLLUP DOOR	20	10	10	10	3/4"
				21					1,380			B						1,380		22				
10	10	10	1"	23	EX. ACCESS GATE				800	20	1	C	20	1					SPARE	24				
				25	SPARE					20	1	A	20	1					SPARE	26				
				27	SPARE					20	1	B	20	1					SPARE	28				
				29	SPARE					20	1	C	20	1					SPARE	30				
				31	SPARE					20	1	A	20	1					SPARE	32				
				33	SPARE					20	1	B	20	1					SPARE	34				
				35	SPARE					20	1	C	20	1					SPARE	36				
				37	SPARE					20	1	A								38				
				39	SPARE					20	1	B	30	3					SPD (TVSS)	40	10	10	10	3/4"
				41	SPARE					20	1	C								42				

NOTES:

LOAD SUMMARY

	LTS	REC	MECH	MISC**	SPARE	TOTAL			PHASE BALANCE	
CONNECTED LOAD (KVA)	0.0	19.4	0.0	6.3	---	25.8	208	LINE-TO-LINE VOLTS	PHASE A (KVA)	9
DEMAND FACTOR	1.25	1.00	---	1.00	20%	---	72	CONNECTED AMPS	PHASE B (KVA)	9
DESIGN LOAD (KVA)	0.0	14.7	0.0	6.3	5.2	26.2	73	DESIGN AMPS	PHASE C (KVA)	7

NOTES:
* REFER TO ONE-LINE DIAGRAM
** MISC DEMAND INCLUDES 25% OF LARGEST MOTOR KVA

PANELBOARD NO: RP6

VOLTAGE (L-L):	208	BUS RATING (A):	125	ENCLOSURE:	NEMA 1
VOLTAGE (L-N):	120	MAIN OC DEVICE (A/PHASE):	MLO	MOUNTING:	SURFACE
PHASE / WIRE:	3 / 4+G	INTERRUPTING RATING (KA):	22	LOCATION:	ELECTRICAL ROOM - 108
200% NEUTRAL:	NO	SERVICE ENTRANCE LABEL:	NO	BUILDING:	P1395

WIRING PHASE	WIRING NEUT.	WIRING GRND.	WIRING COND.	CKT NO.	DESCRIPTION	CONNECTED LOAD (VA) LTS	REC	MECH	MISC	OCP AMPS	P		OCP AMPS	P	CONNECTED LOAD (VA) LTS	REC	MECH	MISC	DESCRIPTION	CKT NO.	WIRING PHASE	NEUT.	GRND.	COND.
10	10	10	3/4"	1	BLUE OPS 515		1,260			20	1	A	20	1		1,260			BLUE OPS 515	2	12	12	12	3/4"
12	12	12	3/4"	3	JTAC 400		720			20	1	B	20	1		1,080			JTAC CONT ROOM 402	4	12	12	12	3/4"
				5	SPARE					20	1	C	20	1					SPARE	6				
				7	SPARE					20	1	A	20	1					SPARE	8				
				9	SPARE					20	1	B	20	1					SPARE	10				
				11	SPARE					20	1	C	20	1					SPARE	12				
12	12	12	3/4"	13	BLUE OPS 515 TABLES		1,080			20	1	A	20	1		1,080			BLUE OPS 515 TABLES	14	12	12	12	3/4"
12	12	12	3/4"	15	BLUE OPS 515 TABLES		1,080			20	1	B	20	1		1,080			BLUE OPS 515 TABLES	16	12	12	12	3/4"
12	12	12	3/4"	17	BLUE OPS 515 TABLES		1,080			20	1	C	20	1		1,080			BLUE OPS 515 TABLES	18	12	12	12	3/4"
12	12	12	3/4"	19	BLUE OPS 515 TABLES		1,080			20	1	A	20	1		1,080			BLUE OPS 515 TABLES	20	12	12	12	3/4"
12	12	12	3/4"	21	ROLLUP DOOR				1,380	20	2	B	20	2				1,380	ROLLUP DOOR	22	12	12	12	3/4"
				23					1,380			C						1,380		24				
				25	SPARE					20	1	A	20	1					SPARE	26				
				27	SPARE					20	1	B	20	1					SPARE	28				
				29	SPARE					20	1	C	20	1					SPARE	30				
				31	SPARE					20	1	A	20	1					SPARE	32				
				33	SPARE					20	1	B	20	1					SPARE	34				
				35	SPARE					20	1	C	20	1					SPARE	36				
				37	SPARE					20	1	A								38				
				39	SPARE					20	1	B	30	3					SPD (TVSS)	40	10	10	10	3/4"
				41	SPARE					20	1	C								42				

NOTES:

LOAD SUMMARY

	LTS	REC	MECH	MISC**	SPARE	TOTAL			PHASE BALANCE	
CONNECTED LOAD (KVA)	0.0	13.0	0.0	5.5	---	18.5	208	LINE-TO-LINE VOLTS	PHASE A (KVA)	7
DEMAND FACTOR	1.25	1.00	---	1.00	20%	---	51	CONNECTED AMPS	PHASE B (KVA)	7
DESIGN LOAD (KVA)	0.0	11.5	0.0	5.5	3.7	20.7	57	DESIGN AMPS	PHASE C (KVA)	5

NOTES:
* REFER TO ONE-LINE DIAGRAM
** MISC DEMAND INCLUDES 25% OF LARGEST MOTOR KVA

PANELBOARD NO: MP1

VOLTAGE (L-L):	208	BUS RATING (A):	125	ENCLOSURE:	NEMA 1
VOLTAGE (L-N):	120	MAIN OC DEVICE (A/PHASE):	MLO	MOUNTING:	SURFACE
PHASE / WIRE:	3 / 4+G	INTERRUPTING RATING (KA):	22	LOCATION:	ELECTRICAL ROOM - 108
200% NEUTRAL:	NO	SERVICE ENTRANCE LABEL:	NO	BUILDING:	P1395

WIRING PHASE	WIRING NEUT.	WIRING GRND.	WIRING COND.	CKT NO.	DESCRIPTION	CONNECTED LOAD (VA) LTS	REC	MECH	MISC	OCP AMPS	P		OCP AMPS	P	CONNECTED LOAD (VA) LTS	REC	MECH	MISC	DESCRIPTION	CKT NO.	WIRING PHASE	NEUT.	GRND.	COND.
10	10	10	3/4"	1	FCU-01, 02			580		15	2	A	15	2					SPARE	2				
				3				580				B								4				
10	10	10	3/4"	5	FCU-03, 08			870		15	2	C	15	2			870		FCU-04, 05	6	12	12	12	3/4"
				7				870				A					870			8				
12	12	12	3/4"	9	FCU-06, 07			1,160		15	2	B	20	2			870		FCU-09, 10	10	12	12	12	3/4"
				11				1,160				C					870			12				
12	12	12	3/4"	13	FCU-11, 12			870		15	2	A	15	2			870		FCU-13, 14	14	12	12	12	3/4"
				15				870				B					870			16				
12	12	12	3/4"	17	FCU-15, 18			580		15	2	C	20	2			1,160		FCU-16, 17	18	12	12	12	3/4"
				19				580				A					1,160			20				
12	12	12	3/4"	21	FCU-19			580		15	2	B	15	2			580		FCU-20, 21	22	12	12	12	3/4"
				23				580				C					580			24				
12	12	12	3/4"	25	AC-1/CU-1			1,560		20	2	A	15	1			240		UH-1, UH-2	26	10	10	10	3/4"
				27				1,560				B	20	2					SPARE	28				
12	12	12	3/4"	29	BOILER B-1			960		20	1	C								30				
				31	SPARE					20	2	A	20	1					SPARE	32				
				33								B	20	1					SPARE	34				
12	12	12	3/4"	35	FCU-43,44			580		15	2	C	20	1					SPARE	36				
				37				580				A								38				
				39	SPARE					20	1	B	30	3					SPD (TVSS)	40	10	10	10	3/4"
				41	SPARE					20	1	C								42				

NOTES:

LOAD SUMMARY

	LTS	REC	MECH	MISC**	SPARE	TOTAL			PHASE BALANCE	
CONNECTED LOAD (KVA)	0.0	0.0	23.5	0.0	---	23.5	208	LINE-TO-LINE VOLTS	PHASE A (KVA)	8
DEMAND FACTOR	1.25	NEC	1.00	---	20%	---	65	CONNECTED AMPS	PHASE B (KVA)	7
DESIGN LOAD (KVA)	0.0	0.0	23.5	0.0	4.7	28.2	78	DESIGN AMPS	PHASE C (KVA)	8

NOTES:
* REFER TO ONE-LINE DIAGRAM
** MISC DEMAND INCLUDES 25% OF LARGEST MOTOR KVA

PANELBOARD NO: MP2

VOLTAGE (L-L):	208	BUS RATING (A):	125	ENCLOSURE:	NEMA 1
VOLTAGE (L-N):	120	MAIN OC DEVICE (A/PHASE):	MLO	MOUNTING:	SURFACE
PHASE / WIRE:	3 / 4+G	INTERRUPTING RATING (KA):	22	LOCATION:	ELECTRICAL ROOM - 108
200% NEUTRAL:	NO	SERVICE ENTRANCE LABEL:	NO	BUILDING:	P1395

WIRING PHASE	WIRING NEUT.	WIRING GRND.	WIRING COND.	CKT NO.	DESCRIPTION	CONNECTED LOAD (VA) LTS	REC	MECH	MISC	OCP AMPS	P		OCP AMPS	P	CONNECTED LOAD (VA) LTS	REC	MECH	MISC	DESCRIPTION	CKT NO.	WIRING PHASE	NEUT.	GRND.	COND.
12	12	12	3/4"	1	FCU-22			290		15	2	A	15	2			780		FCU-24, 25	2	12	12	12	3/4"
				3				290				B					780			4				
12	12	12	3/4"	5	FCU-26, 27			1,160		20	2	C	20	2			1,120		FCU-28	6	12	12	12	3/4"
				7				1,160				A					1,120			8				
10	10	10	3/4"	9	FCU-29, 30			490		15	2	B	15	2			870		FCU-31, 32	10	12	12	12	3/4"
				11				490				C					870			12				
10	10	10	3/4"	13	FCU-33, 34			870		15	2	A	15	2			580		FCU-35, 36	14	12	12	12	3/4"
				15				870				B					580			16				
12	12	12	3/4"	17	FCU-37, 38			580		15	2	C	20	2			1,160		FCU-39, 40	18	12	12	12	3/4"
				19				580				A					1,160			20				
12	12	12	3/4"	21	FCU-41, 42			1,160		20	2	B	20	1		1,080			MECH SPACE 109	22	12	12	12	3/4"
				23				1,160				C	20	1		900			MECH SPACE 109	24	12	12	12	3/4"
10	10	10	3/4"	25	AC-3/HP-3			920		20	2	A	20	1			180		GWH-1	26	12	12	12	3/4"
				27				920				B	20	1			960		RCP-1	28	12	12	12	3/4"
12	12	12	3/4"	29	BOILER B-2			960		20	1	C	20(GFE)	1			480		ACC-HT-01	30	10	10	10	1"
12	12	12	3/4"	31	FCU-23			580		15	2	A	20	1					SPARE	32				
				33				580				B	20	1					SPARE	34				
				35	SPARE					20	1	C	20	1					SPARE	36				
				37	SPARE					20	1	A								38				
				39	SPARE					20	1	B	30	3					SPD (TVSS)	40	10	10	10	3/4"
				41	SPARE					20	1	C								42				

NOTES:
GFE - 30mA GROUND FAULT CIRCUIT BREAKER

LOAD SUMMARY

	LTS	REC	MECH	MISC**	SPARE	TOTAL			PHASE BALANCE	
CONNECTED LOAD (KVA)	0.0	2.0	23.7	0.0	---	25.7	208	LINE-TO-LINE VOLTS	PHASE A (KVA)	8
DEMAND FACTOR	1.25	NEC	1.00	---	20%	---	71	CONNECTED AMPS	PHASE B (KVA)	9
DESIGN LOAD (KVA)	0.0	2.0	23.7	0.0	5.1	30.8	86	DESIGN AMPS	PHASE C (KVA)	9

NOTES:
* REFER TO ONE-LINE DIAGRAM
** MISC DEMAND INCLUDES 25% OF LARGEST MOTOR KVA

SYM | DESCRIPTION | DATE | APPR

NAVFAC

NORTH CAROLINA PROFESSIONAL SEAL 037183 ENGINEER EDWARD CHINNIS, JR. 6/25/2020
SEAL

HDR
440 S. CHURCH STREET, SUITE 1000
CHARLOTTE, NC 28202
TEL (704)338-6700
A/E INFO

APPROVED
James E. Donahue, R.A.
FOR COMMANDER NAVFAC 7/10/2020
ACTIVITY
Approved by Emily Sylvester, Director of Installation Development Division
SATISFACTORY TO DATE 06/19/2020
DES EC | DRW DJF | CHK EC
PM/DM SGL/RMS
BRANCH MANAGER JAS
CHIEF ENG/ARCH EJA
FIRE PROTECTION

DEPARTMENT OF THE NAVY
NAVAL FACILITIES ENGINEERING COMMAND
NAVAL FACILITIES ENGINEERING COMMAND ~ MID-ATLANTIC
CAMP LEJEUNE - JACKSONVILLE, NC
MIDLANT CI CORE
JACKSONVILLE, NORTH CAROLINA
MARSOC
P1395 MARINE RAIDER HEADQUARTERS
PANELBOARD SCHEDULES

SCALE: AS NOTED
EPROJECT NO.: 1603164
CONSTR. CONTR. NO.
NAVFAC DRAWING NO. 12794416
SHEET 197 OF 228
EP604
DRAWFORM REVISION: 17 APRIL 2018

C:\rvt\2016\10136813-E-CENTRAL_P-1395 MARINE HQ_jeremy.forrest.rvt
6/25/2020 8:28:44 AM

1 2 3 4 5

D

PANELBOARD NO: GP

VOLTAGE (L-L):	208	**BUS RATING (A):**	225	**ENCLOSURE:**	NEMA 1
VOLTAGE (L-N):	120	**MAIN OC DEVICE (A/PHASE):**	225	**MOUNTING:**	SURFACE
PHASE / WIRE:	3 / 4+G	**INTERRUPTING RATING (KA):**	22	**LOCATION:**	ELECTRICAL ROOM - 108
200% NEUTRAL:	NO	**SERVICE ENTRANCE LABEL:**	NO	**BUILDING:**	P1395

WIRING				CKT		CONNECTED LOAD (VA)				OCP			OCP		CONNECTED LOAD (VA)					CKT	WIRING			
PHASE	NEUT.	GRND.	COND.	NO.	DESCRIPTION	LTS	REC	MECH	MISC	AMPS	P		AMPS	P	LTS	REC	MECH	MISC	DESCRIPTION	NO.	PHASE	NEUT.	GRND.	COND.
*	*	*	*	1	TP PANEL VIA UPS	0	9,780	0	200	125	3	A	20	1				500	FACP ***	2	12	12	12	3/4"
				3		0	8,880	0	500			B	20	2			1,620		AC-4/CU-4	4	12	12	12	3/4"
				5		0	8,880	0	500			C					1,620			6				
12	12	12	3/4"	7	AC-4/CU-4			1,620		20	2	A	20	1				1,200	SLIDING GATE	8	8	8	8	1"
				9				1,620				B	20	1				1,200	TURNSTILE	10	8	8	8	1"
12	12	12	3/4"	11	GEN HEATER				900	20	1	C	20	1					SPARE	12				
12	12	12	3/4"	13	GEN BATT CHGR				900	20	1	A	20	1					SPARE	14				
				15	SPARE					20	1	B	20	1					SPARE	16				
				17	SPARE					20	1	C	20	1					SPARE	18				
				19	SPARE					20	1	A	20	1					SPARE	20				
				21	SPARE					20	1	B	20	1					SPARE	22				
				23	SPARE					20	1	C	20	1					SPARE	24				
				25	SPARE					20	1	A	20	1					SPARE	26				
				27	SPARE					20	1	B	20	1					SPARE	28				
				29	SPARE					20	1	C	20	1					SPARE	30				
				31	SPARE					20	1	A	20	1					SPARE	32				
				33	SPARE					20	1	B	20	1					SPARE	34				
				35	SPARE					20	1	C	20	1					SPARE	36				
				37	SPARE					20	1	A	60	3					SPD (TVSS)	38	10	10	10	3/4"
				39	SPARE					20	1	B								40				
				41	SPARE					20	1	C								42				

NOTES:
*** NOTED CIRCUIT BREAKER TO BE PAINTED RED AND TO BE CLOCK-ON TYPE BREAKER

LOAD SUMMARY

	LTS	REC	MECH	MISC**	SPARE	TOTAL			PHASE BALANCE	
CONNECTED LOAD (KVA)	0.0	27.5	6.5	5.9	---	39.9	208	LINE-TO-LINE VOLTS	PHASE A (KVA)	14
DEMAND FACTOR	1.25	NEC	1.00	1.00	20%	---	111	CONNECTED AMPS	PHASE B (KVA)	14
DESIGN LOAD (KVA)	0.0	18.8	6.5	5.9	8.0	39.1	109	DESIGN AMPS	PHASE C (KVA)	12

NOTES:
* REFER TO ONE-LINE DIAGRAM
** MISC DEMAND INCLUDES 25% OF LARGEST MOTOR KVA

PANELBOARD NO: TP

VOLTAGE (L-L):	208	**BUS RATING (A):**	125	**ENCLOSURE:**	NEMA 1
VOLTAGE (L-N):	120	**MAIN OC DEVICE (A/PHASE):**	MCB	**MOUNTING:**	SURFACE
PHASE / WIRE:	3 / 4+G	**INTERRUPTING RATING (KA):**	22	**LOCATION:**	COMM ROOM - 107
200% NEUTRAL:	NO	**SERVICE ENTRANCE LABEL:**	NO	**BUILDING:**	P1395

WIRING				CKT		CONNECTED LOAD (VA)				OCP			OCP		CONNECTED LOAD (VA)					CKT	WIRING			
PHASE	NEUT.	GRND.	COND.	NO.	DESCRIPTION	LTS	REC	MECH	MISC	AMPS	P		AMPS	P	LTS	REC	MECH	MISC	DESCRIPTION	NO.	PHASE	NEUT.	GRND.	COND.
10	10	10	1"	1	OUTDOOR CAMERAS ***				200	20	1	A	20	1		1,440			COMM RACK	2	12	12	12	3/4"
12	12	12	3/4"	3	COMM RACK		1,440			20	1	B	20	1		1,440			COMM RACK	4	12	12	12	3/4"
12	12	12	3/4"	5	COMM RACK		1,440			20	1	C	20	1		1,440			COMM RACK	6	12	12	12	3/4"
12	12	12	3/4"	7	COMM RACK		1,440			20	1	A	20	1		900			COMM RECEPT	8	12	12	12	3/4"
12	12	12	3/4"	9	COMM RACK		1,000			20	2	B	20	2		1,000			COMM RACK	10	12	12	12	3/4"
				11			1,000					C				1,000				12				
12	12	12	3/4"	13	COMM RACK		1,000			20	2	A	20	2		1,000			COMM RACK	14	12	12	12	3/4"
				15			1,000					B				1,000				16				
12	12	12	3/4"	17	COMM RACK		1,000			20	2	C	20	2		1,000			COMM RACK	18	12	12	12	3/4"
				19			1,000					A				1,000				20				
10	10	10	1"	21	EX. CARD READER				500	20	1	B	30	1		1,000			COMM RACK	22	10	10	10	1"
10	10	10	1"	23	EX. CARD READER				500	20	1	C	30	1		1,000			COMM RACK	24	10	10	10	1"
10	10	10	1"	25	COMM RACK		1,000			30	1	A	30	1		1,000			COMM RACK	26	10	10	10	1"
10	10	10	1"	27	COMM RACK		1,000			30	1	B	20	1					SPARE	28				
10	10	10	1"	29	COMM RACK		1,000			30	1	C	20	1					SPARE	30				
				31	SPARE					20	1	A	20	1					SPARE	32				
				33	SPARE					20	1	B	20	1					SPARE	34				
				35	SPARE					20	1	C	20	1					SPARE	36				
				37	SPARE					20	1	A	30	3					SPD (TVSS)	38	10	10	10	3/4"
				39	SPARE					20	1	B								40				
				41	SPARE					20	1	C								42				

NOTES:
*** REFERENCE SHEETS EY101 AND EY102 FOR LOCATION.

LOAD SUMMARY

	LTS	REC	MECH	MISC**	SPARE	TOTAL			PHASE BALANCE	
CONNECTED LOAD (KVA)	0.0	27.5	0.0	1.2	---	28.7	208	LINE-TO-LINE VOLTS	PHASE A (KVA)	10
DEMAND FACTOR	1.25	NEC	---	1.00	20%	---	80	CONNECTED AMPS	PHASE B (KVA)	9
DESIGN LOAD (KVA)	0.0	18.8	0.0	1.2	5.7	25.7	71	DESIGN AMPS	PHASE C (KVA)	9

NOTES:
* REFER TO ONE-LINE DIAGRAM
** MISC DEMAND INCLUDES 25% OF LARGEST MOTOR KVA

C

PANELBOARD NO: LP1

VOLTAGE (L-L):	480	**BUS RATING (A):**	125	**ENCLOSURE:**	NEMA 1
VOLTAGE (L-N):	277	**MAIN OC DEVICE (A/PHASE):**	MLO	**MOUNTING:**	SURFACE
PHASE / WIRE:	3 / 4+G	**INTERRUPTING RATING (KA):**	22	**LOCATION:**	ELECTRICAL ROOM - 108
200% NEUTRAL:	NO	**SERVICE ENTRANCE LABEL:**	NO	**BUILDING:**	P1395

WIRING				CKT		CONNECTED LOAD (VA)				OCP			OCP		CONNECTED LOAD (VA)					CKT	WIRING			
PHASE	NEUT.	GRND.	COND.	NO.	DESCRIPTION	LTS	REC	MECH	MISC	AMPS	P		AMPS	P	LTS	REC	MECH	MISC	DESCRIPTION	NO.	PHASE	NEUT.	GRND.	COND.
12	12	12	3/4"	1	OFFICES 504-512	1,000				20	1	A	20	1	800				OPEN OFFICE 514	2	12	12	12	3/4"
12	12	12	3/4"	3	OPEN OFFICE 514	700				20	1	B	20	1	700				OPEN OFFICE 514	4	12	12	12	3/4"
12	12	12	3/4"	5	BLUE OPS AREA 515	800				20	1	C	20	1	600				MECHANICAL 109	6	12	12	12	3/4"
12	12	12	3/4"	7	OFFICE 501 - CONF 503	1,130				20	1	A	20	1	600				JTAC 400	8	12	12	12	3/4"
12	12	12	3/4"	9	CORRIDOR 105	700				20	1	B	20	1	600				RESTROOMS	10	12	12	12	3/4"
12	12	12	3/4"	11	PURPLE OPS AREA 310	1,000				20	1	C	20	1	600				OFFICES 302-308	12	12	12	12	3/4"
12	12	12	3/4"	13	CONF ROOM 201,202,301	2,100				20	1	A	20	1	400				RECEPTION 200	14	12	12	12	3/4"
12	12	12	3/4"	15	OFFICES 205-214	700				20	1	B	20	1	800				GREEN OPS AREA 215	16	12	12	12	3/4"
12	12	12	3/4"	17	GREEN OPS AREA 215	900				20	1	C	20	1	800				PARKING LOT	18	10	10	10	3/4"
12	12	12	3/4"	19	ENTRY VESTIBULE	500				20	1	A	20	1	800				PARKING LOT	20	10	10	10	3/4"
12	12	12	3/4"	21	TEAM RMS 204 & 309	200				20	1	B	20	1	900				ACCESS ROAD	22	10	10	10	3/4"
				23	SPARE					20	1	C	20	1					SPARE	24				
				25	SPARE					20	1	A	20	1					SPARE	26				
				27	SPARE					20	1	B	20	1					SPARE	28				
				29	SPARE					20	1	C	20	1					SPARE	30				
				31	SPARE					20	1	A	20	1					SPARE	32				
				33	SPARE					20	1	B	20	1					SPARE	34				
				35	SPARE					20	1	C	20	1					SPARE	36				
				37	SPARE					20	1	A	60	3					SPD (TVSS)	38	6	6	6	1"
				39	SPARE					20	1	B								40				
				41	SPARE					20	1	C								42				

NOTES:

LOAD SUMMARY

	LTS	REC	MECH	MISC**	SPARE	TOTAL			PHASE BALANCE	
CONNECTED LOAD (KVA)	17.3	0.0	0.0	0.0	---	17.3	480	LINE-TO-LINE VOLTS	PHASE A (KVA)	7
DEMAND FACTOR	1.25	NEC	---	---	20%	---	21	CONNECTED AMPS	PHASE B (KVA)	5
DESIGN LOAD (KVA)	21.7	0.0	0.0	0.0	3.5	25.1	30	DESIGN AMPS	PHASE C (KVA)	5

NOTES:
* REFER TO ONE-LINE DIAGRAM
** MISC DEMAND INCLUDES 25% OF LARGEST MOTOR KVA

B

PANELBOARD NO: ANT

VOLTAGE (L-L):	208	**BUS RATING (A):**	125	**ENCLOSURE:**	NEMA 3R
VOLTAGE (L-N):	120	**MAIN OC DEVICE (A/PHASE):**	MCB	**MOUNTING:**	SURFACE
PHASE / WIRE:	3 / 4+G	**INTERRUPTING RATING (KA):**	22	**LOCATION:**	ANTENNA PAD
200% NEUTRAL:	NO	**SERVICE ENTRANCE LABEL:**	NO	**BUILDING:**	P1395

WIRING				CKT		CONNECTED LOAD (VA)				OCP			OCP		CONNECTED LOAD (VA)					CKT	WIRING			
PHASE	NEUT.	GRND.	COND.	NO.	DESCRIPTION	LTS	REC	MECH	MISC	AMPS	P		AMPS	P	LTS	REC	MECH	MISC	DESCRIPTION	NO.	PHASE	NEUT.	GRND.	COND.
12	12	12	1"	1	RECEPT		360			20	1	A	20	1		360			RECEPT	2	12	12	12	1"
12	12	12	1"	3	RECEPT		360			20	1	B	20	1		360			RECEPT	4	12	12	12	1"
12	12	12	1"	5	RECEPT		360			20	1	C	20	1		360			RECEPT	6	12	12	12	1"
12	12	12	1"	7	DEDICATED CIRCUIT		1,000			20	1	A	20	1		1,000			DEDICATED CIRCUIT	8	12	12	12	1"
12	12	12	1"	9	DEDICATED CIRCUIT		1,000			20	1	B	20	1		1,000			DEDICATED CIRCUIT	10	12	12	12	1"
				11	SPARE					20	1	C	20	1		1,000			DEDICATED CIRCUIT	12	12	12	12	1"
				13	SPARE					20	1	A	20	1		1,000			DEDICATED CIRCUIT	14	12	12	12	1"
				15	SPARE					20	1	B	20	1					SPARE	16				
				17	SPARE					20	1	C	20	1					SPARE	18				
				19	SPARE					20	1	A	20	1					SPARE	20				
				21	SPARE					20	1	B	20	1					SPARE	22				
				23	SPARE					20	1	C	20	1					SPARE	24				
				25	SPARE					20	1	A	20	1					SPARE	26				
				27	SPARE					20	1	B	20	1					SPARE	28				
				29	SPARE					20	1	C	20	1					SPARE	30				
				31	SPARE					20	1	A	20	1					SPARE	32				
				33	SPARE					20	1	B	20	1					SPARE	34				
				35	SPARE					20	1	C	20	1					SPARE	36				
				37	SPARE					20	1	A	60	3					SPD (TVSS)	38	10	10	10	3/4"
				39	SPARE					20	1	B								40				
				41	SPARE					20	1	C								42				

NOTES:

LOAD SUMMARY

	LTS	REC	MECH	MISC**	SPARE	TOTAL			PHASE BALANCE	
CONNECTED LOAD (KVA)	0.0	8.2	0.0	0.0	---	8.2	208	LINE-TO-LINE VOLTS	PHASE A (KVA)	4
DEMAND FACTOR	1.25	NEC	---	---	20%	---	23	CONNECTED AMPS	PHASE B (KVA)	3
DESIGN LOAD (KVA)	0.0	8.2	0.0	0.0	1.6	9.8	27	DESIGN AMPS	PHASE C (KVA)	2

NOTES:
* REFER TO ONE-LINE DIAGRAM
** MISC DEMAND INCLUDES 25% OF LARGEST MOTOR KVA

A

C:\rvt\2016\10136813-E-CENTRAL_P-1395 MARINE HQ_jeremy.forrest.rvt
6/25/2020 8:28:47 AM

SYM | DESCRIPTION | DATE | APPR

NAVFAC

NORTH CAROLINA PROFESSIONAL SEAL 037183 ENGINEER EDWARD CHINNIS, JR.
6/25/2020
SEAL

HDR
440 S. CHURCH STREET, SUITE 1000
CHARLOTTE, NC 28202
TEL (704)338-6700

A/E INFO

APPROVED
James E. Donahue, R.A.
FOR COMMANDER NAVFAC 7/10/2020

ACTIVITY
Approved by Emily Sylvester, Director of Installation Development Division
SATISFACTORY TO DATE 06/19/2020

DES EC	DRW DJF	CHK EC
PM/DM SGL/RMS		
BRANCH MANAGER JAS		
CHIEF ENG/ARCH EJA		
FIRE PROTECTION		

DEPARTMENT OF THE NAVY
NAVAL FACILITIES ENGINEERING COMMAND
NAVAL FACILITIES ENGINEERING COMMAND ~ MID-ATLANTIC
CAMP LEJEUNE - JACKSONVILLE, NC
MIDLANT CI CORE
JACKSONVILLE, NORTH CAROLINA
MARSOC
P1395 MARINE RAIDER HEADQUARTERS
PANELBOARD SCHEDULES

SCALE: AS NOTED
EPROJECT NO.: 1603164
CONSTR. CONTR. NO.
NAVFAC DRAWING NO. 12794417
SHEET 198 OF 228
EP605

DRAWFORM REVISION: 17 APRIL 2018

PANELBOARD NO: AVP1

VOLTAGE (L-L):	208	**BUS RATING (A):**	125	**ENCLOSURE:**	NEMA 1
VOLTAGE (L-N):	120	**MAIN OC DEVICE (A/PHASE):**	MLO	**MOUNTING:**	SURFACE
PHASE / WIRE:	3 / 4+G	**INTERRUPTING RATING (KA):**	22	**LOCATION:**	ELECTRICAL ROOM - 108
200% NEUTRAL:	NO	**SERVICE ENTRANCE LABEL:**	NO	**BUILDING:**	P1395

WIRING				CKT		CONNECTED LOAD (VA)				OCP			OCP		CONNECTED LOAD (VA)					CKT	WIRING			
PHASE	NEUT.	GRND.	COND.	NO.	DESCRIPTION	LTS	REC	MECH	MISC	AMPS	P		AMPS	P	LTS	REC	MECH	MISC	DESCRIPTION	NO.	PHASE	NEUT.	GRND.	COND.
8	8	8	3/4"	1	OFFICE 512, 514 TV		720			20	1	A	20	1		720			OFFICE 510, 511 TV	2	10	10	10	3/4"
10	10	10	3/4"	3	OFFICE 508, 509 TV		720			20	1	B	20	1		720			OFFICE 506, 507 TV	4	10	10	10	3/4"
8	8	8	3/4"	5	OFFICE 504, 505 TV		720			20	1	C	20	1		720			OFFICE 501, 502 TV	6	10	10	10	3/4"
10	10	10	3/4"	7	CONF ROOM 503 TV		1,260			20	1	A	20	1		1,260			CONF ROOM AV	8	10	10	10	3/4"
10	10	10	3/4"	9	BLUE OPS TV, PRJCT		1,700			30	1	B	30	1		1,560			BLUE OPS TV, PRJCT	10	10	10	10	3/4"
12	12	12	3/4"	11	BLUE OPS AV RACK		1,440			20	2	C	20	2		1,440			BLUE OPS AV RACK	12	12	12	12	3/4"
				13			1,440					A				1,440				14				
12	12	12	3/4"	15	PURPLE OPS AV RACK		1,440			20	2	B	20	2		1,440			PURPLE OPS AV RACK	16	12	12	12	3/4"
				17			1,440					C				1,440				18				
10	10	10	3/4"	19	PURPLE OPS TV, PRJCT		1,440			30	1	A	30	1		1,440			PURPLE OPS TV, PRJCT	20	10	10	10	3/4"
12	12	12	3/4"	21	OFFICE 308, 309 TV		720			20	1	B	20	1		720			OFFICE 302-304 TV	22	12	12	12	3/4"
12	12	12	3/4"	23	OFFICE 305-307 TV		720			20	1	C	20	1					SPARE	24				
				25	SPARE					20	1	A	20	1					SPARE	26				
				27	SPARE					20	1	B	20	1					SPARE	28				
				29	SPARE					20	1	C	20	1					SPARE	30				
				31	SPARE					20	1	A	20	1					SPARE	32				
				33	SPARE					20	1	B	20	1					SPARE	34				
				35	SPARE					20	1	C	20	1					SPARE	36				
				37	SPARE					20	1	A								38				
				39	SPARE					20	1	B	60	3					SPD (TVSS)	40	10	10	10	3/4"
				41	SPARE					20	1	C								42				

NOTES:

LOAD SUMMARY

	LTS	REC	MECH	MISC**	SPARE	TOTAL
CONNECTED LOAD (KVA)	0.0	26.7	0.0	0.0	---	26.7
DEMAND FACTOR	1.25	NEC	---	---	20%	---
DESIGN LOAD (KVA)	0.0	18.3	0.0	0.0	5.3	23.7

208	LINE-TO-LINE VOLTS	PHASE A (KVA)	10
74	CONNECTED AMPS	PHASE B (KVA)	9
66	DESIGN AMPS	PHASE C (KVA)	8

NOTES:
* REFER TO ONE-LINE DIAGRAM
** MISC DEMAND INCLUDES 25% OF LARGEST MOTOR KVA

PANELBOARD NO: AVP2

VOLTAGE (L-L):	208	**BUS RATING (A):**	125	**ENCLOSURE:**	NEMA 1
VOLTAGE (L-N):	120	**MAIN OC DEVICE (A/PHASE):**	MLO	**MOUNTING:**	SURFACE
PHASE / WIRE:	3 / 4+G	**INTERRUPTING RATING (KA):**	22	**LOCATION:**	ELECTRICAL ROOM - 108
200% NEUTRAL:	NO	**SERVICE ENTRANCE LABEL:**	NO	**BUILDING:**	P1395

WIRING				CKT		CONNECTED LOAD (VA)				OCP			OCP		CONNECTED LOAD (VA)					CKT	WIRING			
PHASE	NEUT.	GRND.	COND.	NO.	DESCRIPTION	LTS	REC	MECH	MISC	AMPS	P		AMPS	P	LTS	REC	MECH	MISC	DESCRIPTION	NO.	PHASE	NEUT.	GRND.	COND.
10	10	10	3/4"	1	CONF ROOM 301 TV		1,260			20	1	A	20	1		1,260			CONF ROOM 301 AV	2	10	10	10	3/4"
10	10	10	3/4"	3	GREEN OPS PROJECTOR		1,260			30	1	B	30	1		1,260			GREEN OPS PROJECTOR	4	10	10	10	3/4"
10	10	10	3/4"	5	GREEN OPS TV		900			20	1	C	20	1		900			GREEN OPS TV	6	10	10	10	3/4"
12	12	12	3/4"	7	GREEN OPS AV RACK		1,440			20	2	A	20	2		1,440			GREEN OPS AV RACK	8	12	12	12	3/4"
				9			1,440					B				1,440				10				
10	10	10	3/4"	11	OFFICE 204, 205 TV		540			20	1	C	20	1		540			OFFICE 207, 208 TV	12	10	10	10	3/4"
10	10	10	3/4"	13	OFFICE 209-211 TV		720			20	1	A	20	1		720			OFFICE 212-214 TV	14	10	10	10	3/4"
8	8	8	3/4"	15	CONF ROOM 201 AV		1,260			20	1	B	20	1		900			CONF ROOM 201 TV	16	8	8	8	3/4"
8	8	8	3/4"	17	CONF ROOM 202 AV		1,260			20	1	C	20	1		900			CONF ROOM 202 TV	18	8	8	8	3/4"
				19	SPARE					20	1	A	20	1					SPARE	20				
				21	SPARE					20	1	B	20	1					SPARE	22				
				23	SPARE					20	1	C	20	1					SPARE	24				
				25	SPARE					20	1	A	20	1					SPARE	26				
				27	SPARE					20	1	B	20	1					SPARE	28				
				29	SPARE					20	1	C	20	1					SPARE	30				
				31	SPARE					20	1	A	20	1					SPARE	32				
				33	SPARE					20	1	B	20	1					SPARE	34				
				35	SPARE					20	1	C	20	1					SPARE	36				
				37	SPARE					20	1	A								38				
				39	SPARE					20	1	B	60	3					SPD (TVSS)	40	10	10	10	3/4"
				41	SPARE					20	1	C								42				

NOTES:

LOAD SUMMARY

	LTS	REC	MECH	MISC**	SPARE	TOTAL
CONNECTED LOAD (KVA)	0.0	19.4	0.0	0.0	---	19.4
DEMAND FACTOR	1.25	NEC	---	---	20%	---
DESIGN LOAD (KVA)	0.0	14.7	0.0	0.0	3.9	18.6

208	LINE-TO-LINE VOLTS	PHASE A (KVA)	7
54	CONNECTED AMPS	PHASE B (KVA)	8
52	DESIGN AMPS	PHASE C (KVA)	5

NOTES:
* REFER TO ONE-LINE DIAGRAM
** MISC DEMAND INCLUDES 25% OF LARGEST MOTOR KVA

APPR | DATE | DESCRIPTION | SYM

NAVFAC

NORTH CAROLINA PROFESSIONAL SEAL 037183 ENGINEER EDWARD CHINNIS, JR.
6/25/2020
SEAL

HDR
440 S. CHURCH STREET, SUITE 1000
CHARLOTTE, NC 28202
TEL (704)338-6700

A/E INFO

APPROVED
Approved by Emily Sylvester, Director of Installation Development Division
FOR COMMANDER NAVFAC 7/01/2020
ACTIVITY
SATISFACTORY TO DATE 06/19/2020
DES EC | DRW DJF | CHK EC
PM/DM SGL/RMS
BRANCH MANAGER JAS
CHIEF ENG/ARCH EJA
FIRE PROTECTION

DEPARTMENT OF THE NAVY
NAVAL FACILITIES ENGINEERING COMMAND
MIDLANT CI CORE
MARSOC
NAVAL FACILITIES ENGINEERING COMMAND ~ MID-ATLANTIC
CAMP LEJEUNE · JACKSONVILLE, NC
JACKSONVILLE, NORTH CAROLINA
P1395 MARINE RAIDER HEADQUARTERS
PANELBOARD SCHEDULES

SCALE: AS NOTED
EPROJECT NO.: 1603164
CONSTR. CONTR. NO.
NAVFAC DRAWING NO. 12794418
SHEET 199 OF 228

EP606

DRAWFORM REVISION: 17 APRIL 2018

C:\rvt\2016\01\1603813-E-CENTRAL_P-1395 MARINE HQ_jeremy.forrest.rvt
6/25/2020 8:28:49 AM

COMMUNICATIONS LEGEND

▽	CONFERENCE ROOM FLUSH FLOOR MOUNTED NON-SECURE DATA WITH FOUR 8P8C JACKS PER OUTLET UNLESS SUBSCRIPT INDICATES OTHERWISE. NON-SECURE DATA OUTLET SHALL BE LIMITED TO NIPRNET DATA DEVICES.
$▽_S$	CONFERENCE ROOM FLUSH FLOOR MOUNTED SECURE DATA WITH FOUR 8P8C JACKS PER OUTLET UNLESS SUBSCRIPT INDICATES OTHERWISE. SECURE DATA OUTLET SHALL BE LIMITED TO SIPRNET DATA DEVICES.
$▽_A$	FLUSH FLOOR MOUNTED 4-GANG BACKBOX FOR A/V DEVICE CONNECTION. SEE A/V DRAWINGS FOR ADDITIONAL INFORMATION.
▽	NON-SECURE DATA WITH FOUR 8P8C JACKS PER OUTLET MOUNTED 18" AFF UNLESS SUBSCRIPT INDICATES OTHERWISE. NON-SECURE DATA OUTLET SHALL BE LIMITED TO NIPRNET DATA DEVICES.
$▽_S$	SECURE DATA WITH FOUR 8P8C JACKS PER OUTLET MOUNTED 18" AFF UNLESS SUBSCRIPT INDICATES OTHERWISE. SECURE DATA OUTLET SHALL BE LIMITED TO SIPRNET DATA DEVICES.
$▽_{FO}$	SECURE DATA WITH SIX LC FIBER OPTIC JACKS PER OUTLET MOUNTED AT 18" AFF.
▼	NON-SECURE VOICE (POTS) OUTLET MOUNTED 46" AFF UNLESS NOTED OTHERWISE.
$▽_A$	18" AFF WALL MOUNTED BACKBOX FOR A/V DEVICE CONNECTION. PROVIDE 2-GANG BACKBOX UNLESS SUBSCRIPT INDICATES OTHERWISE. COORDINATE QUANTITY OF CONNECTIONS AND ROUGH-IN LOCATIONS WITH AV INSTALLER PRIOR TO ROUGH-IN.
$▽^{TV}$	NON-SECURE DATA OUTLETS WITH TWO 8P8C JACKS. OUTLETS TO BE CENTERED ABOVE FINISHED FLOOR AT THE HEIGHT INDICATED ON THE AREA AV FLOOR PLANS. REFER TO THE TA-100 SERIES DRAWINGS FOR THE RESPECTIVE MOUNTING HEIGHT OF EACH OUTLET PRIOR TO ROUGH-IN.
$▽_C$	CEILING MOUNTED NON-SECURE DATA OUTLETS WITH FOUR 8P8C JACKS.
	144-PORT FIBER OPTIC DISTRIBUTION PANEL FOR TERMINATION OF HORIZONTAL AND BACKBONE FIBER OPTIC CABLING.
	HORIZONTAL CABLE MANAGEMENT UNITS (CABLE GUIDES).
	CONDUIT STUB INTO ROOM.
	SIPR CABLE TRAY.
	NIPR CABLE TRAY.
DC	BACKBOX FOR DOOR CONTACT, BMS. LOCATE 2" ABOVE AND 2" TO THE SIDE OF THE DOOR.
DP	BACKBOX FOR DOOR POSITION SWITCH.
DA	BACKBOX FOR LOCAL DOOR ANNUNCIATOR.
CR	BACKBOX FOR CARD READER, MOUNT 4'-0" AFF UNLESS NOTED OTHERWISE.
KP	BACKBOX FOR KEYPAD. MOUNT 4'-0" AFF UNLESS NOTED OTHERWISE.
KPM	BACKBOX FOR PREMISE (IDS/ACS) CONTROL UNIT. KEYPAD OF PREMISE CONTROL UNIT SHALL BE USED TO MONITOR AND ARM/DISARM ALL MOTION AND GLASS BREAK SENSING DEVICES WITHIN THE FACILITY. MOUNT 4'-0" AFF UNLESS NOTED OTHERWISE.
PP	BACKBOX FOR ACS SECURITY PIN PAD. MOUNT 4'-0" AFF UNLESS NOTED OTHERWISE.
MS MS	BACKBOX FOR PASSIVE INFRARED OR DUAL TECHNOLOGY MOTION DETECTOR. SUBSCRIPT INDICATES THAT SENSOR DEVICE CAN BE ARM/DISARM BY KEYPAD WITH SIMILAR SUBSCRIPT.
CC	BACKBOX FOR WALL CCTV DOME CAMERA.
CCTV	CCTV SYSTEM EQUIPMENT WORKSTATION WITH - WALL MOUNTED MONITOR. PROVIDE MOUNTING BRACKETS AND OTHER ENHANCEMENTS REQUIRED TO SECURELY MOUNT THE EQUIPMENT.
FB	OPEN OFFICE NON-SECURE FLUSH-MOUNTED DATA FLOOR BOX FOR CABLE CONNECTION TO FURNITURE SYSTEM. INSTALLED IN ACCESS FLOOR SPACE. PROVIDE EACH FLOOR BOX WITH TWELVE CAT6 DATA PORTS UNLESS SUBSCRIPT INDICATES OTHERWISE. PROVIDE TWO DATA PORTS AT EACH DESK.
FB_S	OPEN OFFICE SECURE FLUSH-MOUNTED DATA FLOOR BOX FOR CABLE CONNECTION TO FURNITURE SYSTEM. INSTALLED IN ACCESS FLOOR SPACE. PROVIDE EACH FLOOR BOX WITH TWELVE CAT6 DATA PORTS UNLESS SUBSCRIPT INDICATES OTHERWISE. PROVIDE TWO DATA PORTS AT EACH DESK.
KVM	FLUSH MOUNTED FLOORBOX WITH KVM AND AUX CONNECTIONS. COORDINATE QUANTITY OF CONNECTIONS, AND ROUGH-IN LOCATION, WITH AV INSTALLER PRIOR TO ROUGH-IN. PROVIDE 4-GANG BACKBOX UNLESS SUBSCRIPT INDICATES OTHERWISE.

COMMUNICATIONS LEGEND - (CONTINUED)

WIR	WIRELESS INTRUSION PREVENTION SYSTEM SENSOR WITH PoE.
CDS	WALL MOUNTED CELLPHONE DETECTION SYSTEM SENSOR WITH PoE AND INTEGRAL ANTENNA.
GB	BACKBOX FOR DUAL (ACOUSTIC AND SHOCKWAVE) TECHNOLOGY GLASS BREAK SENSOR. PROVIDE SENSORS RATED FOR THE TYPE OF GLASS USED THROUGHOUT THE FACILITY. SUBSCRIPT INDICATES THAT SENSOR DEVICE CAN BE ARM/DISARM KEYPAD WITH LIKEWISE SUBSCRIPT.
S	BACKBOX FOR CEILING MOUNTED AV SPEAKER. COORDINATE ROUGH-IN LOCATIONS WITH AV INSTALLER PRIOR TO ROUGH-IN.
J	SYSTEM FURNITURE CONNECTION. PROVIDE EACH SYSTEM FURNITURE CONNECTION WITH TWELVE CAT6 DATA UNLESS NUMERICAL SUBSCRIPT INDICATES OTHERWISE. PROVIDE TWO DATA PORTS AT EACH DESK. SUBSCRIPT "S" INDICATES SECURE CABLES.

GENERAL NOTES

1. JACK SHALL BE LABELED AND COLOR CODED BASED ON THE TYPE OF TRAFFIC THEY HANDLE. REFER TO "NETWORK COLOR MATRIX" DETAILS ON THE TELECOMMUNICATIONS DETAIL PRIOR TO INSTALLATION.
2. CONDUITS ENTERING COMM ROOMS THROUGH THE FLOOR SHALL BE INSTALLED SO THAT THEY ARE AT LEAST 1" FROM THE PLYWOOD MOUNTED ON THE WALL AND EXTEND AT LEAST 3" ABOVE FINISHED FLOOR AND SHALL HAVE A PROTECTIVE BUSHING ON THE END OF THE CONDUIT TO PROTECT THE CABLING.
3. CONDUITS ENTERING/EXITING COMM ROOMS THROUGH THE WALL OR CEILING SHALL BE INSTALLED SO THAT THEY ARE 1"-3" FROM THE WALL/CEILING AND SHALL HAVE A PROTECTIVE BUSHING ON THE END OF THE CONDUIT TO PROTECT THE CABLING.
4. WHERE APPLICABLE, BUNDLING AND SECURING OF CABLES SHALL BE ACCOMPLISHED THRU USE OF VELCRO TAPE.
5. CLASSIFIED (SIPRNET) AND UNCLASSIFIED (NIPRNET) NETWORKS CANNOT BE IN THE SAME JACKET REGARDLESS OF CABLE CONSTRUCTION.
6. ALL CABLES SHALL BE PLENUM RATED.
7. TEN FOOT CAT6 DEVICE CABLES SHALL BE PROVIDED TO EQUAL 1.1 TIMES THE NUMBER OF LOCATION WHERE CAT6 JACKS ARE INSTALLED. EXAMPLE: IF 100 JACK LOCATIONARE INSTALLED THEN PROVIDE 110 DEVICES CABLES (1.1x100).
8. SPARE JACKS SHALL BE PROVIDED TO EQUAL 0.1 TIMES THE TOTAL NUMBER OF SHIELDED CAT6A OR FIBER OPTIC OUTLET JACKS INSTALLED. EXAMPLE: IF 100 JACK LOCATIONS ARE INSTALLED THEN PROVIDE 10 SPARE JACKS (0.1x100).
9. PROVIDE DEVICE CABLES AND SPARE JACKS FOR EACH DIFFERENT SYSTEM.
10. FIBER-OPTIC CABLES SHALL HAVE A MINIMUM OF TEN FEET OF SLACK ON EACH END.
11. TERMINATE ALL BACKBONE FIBER-OPTIC STRANDS THROUGH USE OF SC-TYPE NO EPOXY/NO POLISH MECHANICAL SPLICED FIBER-OPTIC CONNECTORS WITH CERAMIC TIP.
12. THE POTS SYSTEM HEADEND AND HANDSETS WILL BE GOVERNMENT FURNISHED AND GOVERNMENT INSTALLED.
13. ALL NETWORK ELECTRONICS INCLUDING, BUT NOT LIMITED TO CORE SWITCHES, EDGE SWITCHES, SERVERS, ETC., SHALL BE GOVERNMENT FURNISHED AND GOVERNMENT INSTALLED.
14. COMMUNICATIONS CONTRACTOR SHALL TERMINATE ALL BACKBONE AND HORIZONTAL CABLING UNLESS SPECIFICALLY INSTRUCTED OTHERWISE. PROVIDE ALL NECESSARY PATCH PANELS, PUNCH DOWN BLOCKS, MATERIALS, ETC. FOR A COMPLETE SYSTEM.
15. PATCH CORDS PROVIDED SHALL BE FACTORY MADE; COPPER OR FIBER MATERIAL SHALL BE RATED TO MATCH FACILITY NETWORK SPECIFICATIONS.
16. ALL PATCH PANELS SHALL MATCH THE CATEGORY CABLING TERMINATED ON THEM AND HAVE SUFFICIENT PATCH CORDS PROVIDED TO FULLY UTILIZE THE PATCH PANELS.
17. COPPER PATCH CORD SHALL BE: FOUR PAIR, 100-OHM TWISTED PAIR CABLE WITH 24 GAUGE STRANDED COPPER CONDUCTORS AND MUST MEET THE SPECIFICATIONS TO SUPPORT GIGABIT ETHERNET AND AT LEAST 500MHZ BANDWIDTH.
18. PROVIDE PATCH CORDS FOR EACH DIFFERENT SYSTEM.
19. FLEXIBLE METAL RACEWAY SYSTEMS ARE NOT PERMITTED FOR CABLE DISTRIBUTION.
20. DEVICE COVER AND FINISH TO BE COORDINATED WITH ARCHITECT.
21. PROVIDE KRONE PATCH CORDS FOR VOICE/POTS.

ABBREVIATIONS

A	AMPERE
AC	ABOVE COUNTER, 42" AFF UNLESS NOTED OTHERWISE
ACS	ACCESS CONTROL SYSTEM
ADA	AMERICANS WITH DISABILITIES ACR
AFF	ABOVE FINISHED FLOOR
AFG	ABOVE FINISHED GRADE
AL	ALUMINUM
1/C	ONE CONDUCTOR PER CONDUIT
BMS	BALANCED MAGNETIC SWITCH
CB	CIRCUIT BREAKER
CKT	CIRCUIT
CP	CONSOLIDATION POINT
CU	COPPER
EF	EXHAUST FAN
EMT	ELECTRICAL METALLIC TUBING
EWC	ELECTRIC WATER COOLER
FACP	FIRE ALARM CONTROL PANEL
FM	FREQUENCY MODULATION
FO	FIBER OPTIC
GFGI	GOVERNMENT FURNISHED GOVERNMENT INSTALLED
GFI	GROUND FAULT CIRCUIT INTERRUPTER
GFP	GROUND FAULT PROTECTION
HACR	HEATING AIR CONDITIONING REFRIGERATION
HP	HORSEPOWER
HPS	HIGH PRESSURE SODIUM
HT	HEIGHT
HZ	HERTZ
IDS	INTRUSION DETECTION SYSTEM
J	JUNCTION BOX
KWH	KILOWATT HOURS
LED	LIGHT EMITTING DIODE
MCB	MOLDED CASE CIRCUIT BREAKER
MH	METAL HALIDE
MLO	MAIN LUG ONLY
MTD	MOUNTED
MUTOA	MULTIUSER TELECOMMUNICATIONS OUTLET ASSEMBLY
NEC	NATIONAL ELECTRICAL CODE
NF	NON-FUSED
NO.	NUMBER
OS	OCCUPANCY SENSOR
PH	PHASE
PIR	PASSIVE INFRARED
PTZ	PAN TILT ZOOM CAMERA
RGS	RIGID GALVANIZED STEEL
SM	SINGLE MODE
TMGB	TELECOMMUNICATIONS MAIN GROUNDING BAR
TTB	TELEPHONE TERMINAL BOARD
TV	TELEVISION
TVSS	TRANSIENT VOLTAGE SURGE SUPPRESSOR
UON	UNLESS OTHERWISE NOTED
V	VOLT
VA	VOLTAMPERE
VTC	VIDEO TELECONFERENCING
VVD	VARIABLE VOLUME DAMPER
W	WATTS
WP	WATERPROOF
XFMR	TRANSFORMER

SYM	DESCRIPTION	DATE	APPR

NAVFAC

NORTH CAROLINA REGISTERED PROFESSIONAL SEAL 037183 ENGINEER EDWARD CHINNIS JR.
6/25/2020

HDR
440 S. CHURCH STREET, SUITE 1000
CHARLOTTE, NC 28202
TEL (704)338-6700
A/E INFO

APPROVED
FOR COMMANDER NAVFAC 7/01/2020
ACTIVITY
Approved by Emily Sylvester, Director of Installation Development Division
SATISFACTORY TO DATE 06/19/2020
DES EC | DRW DJF | CHK JAZ
PM/DM SGL/RMS
BRANCH MANAGER JAS
CHIEF ENG/ARCH EJA
FIRE PROTECTION

DEPARTMENT OF THE NAVY
NAVAL FACILITIES ENGINEERING COMMAND
MIDLANT CI CORE
MARSOC
NAVAL FACILITIES ENGINEERING COMMAND – MID-ATLANTIC
CAMP LEJEUNE - JACKSONVILLE NC
JACKSONVILLE, NORTH CAROLINA
P1395 MARINE RAIDER HEADQUARTERS
TELECOMMUNICATIONS LEGEND, ABBREVIATIONS AND GENERAL NOTES

SCALE: AS NOTED
EPROJECT NO.: 1603164
CONSTR. CONTR. NO.
NAVFAC DRAWING NO. 12794419
SHEET 200 OF 228
ET001
DRAWFORM REVISION: 17 APRIL 2018

C:\e4\2018\10136613-E-CENTRAL_P-1395 MARINE HQ_jeremy.forrest.rvt
6/26/2020 8:28:56 AM

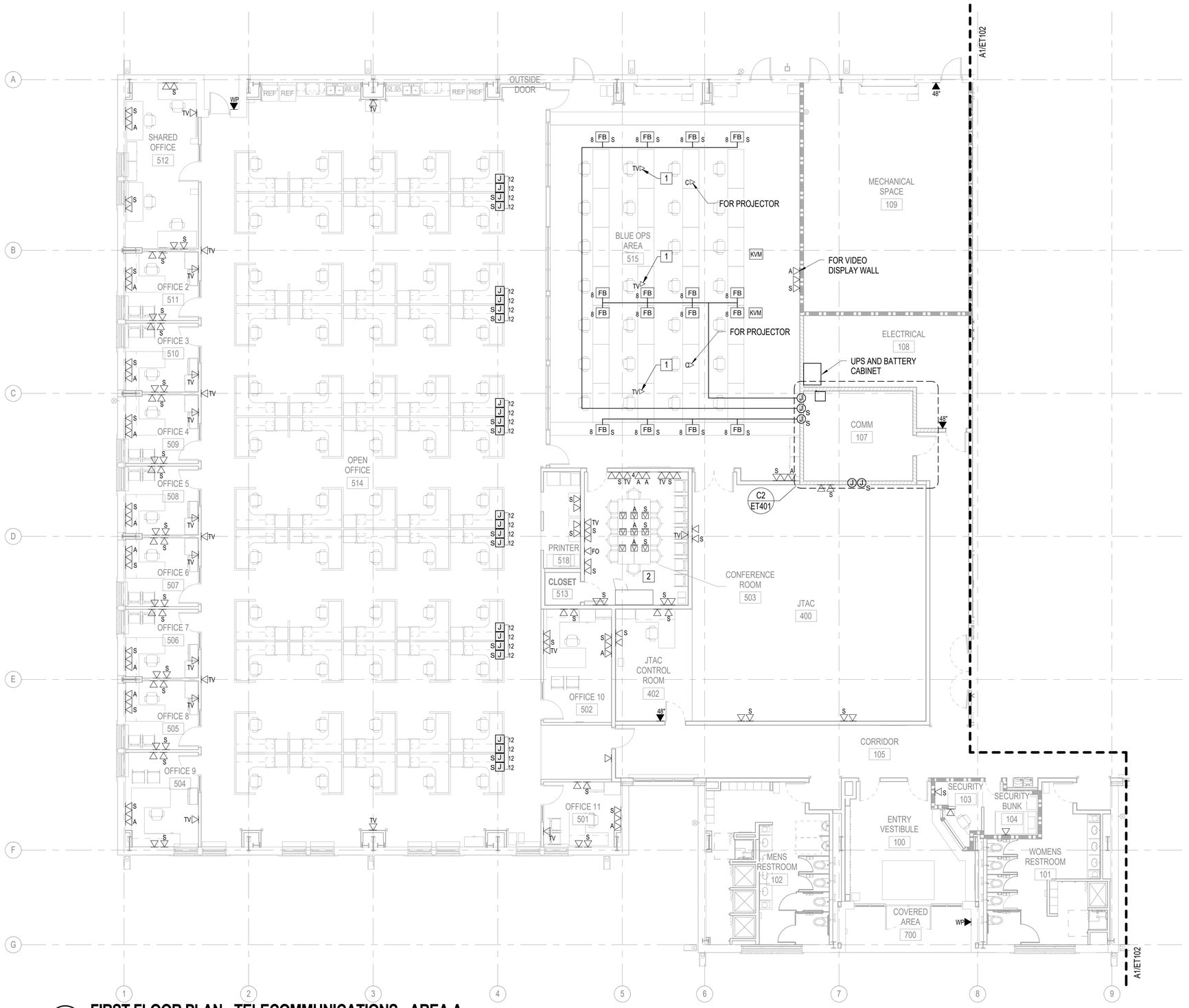

A1 FIRST FLOOR PLAN - TELECOMMUNICATIONS - AREA A

1/8" = 1'-0"

GENERAL NOTES

1. PROVIDE SEPARATION DISTANCE OF 6" BETWEEN SIPRNET AND NIPRNET DEVICE OUTSIDE EDGE OF 5"x5" BOX.
2. PROVIDE MINIMUM SEPARATION DISTANCE OF 6" BETWEEN SIPRNET AND NIPRNET CABLE PATHWAYS AND TERMINATIONS.
3. IN INDIVIDUAL OFFICES, MOUNT TV OUTLETS AT 66"AFF. IN OPEN OFFICES MOUNT TV OUTLETS AT 72"AFF. LOCATE TV OUTLET ADJACENT TO THEIR RESPECTIVE POWER RECEPTACLE.
4. FLOOR BOX TO BE LIMITED TO SERVING A MAXIMUM OF 6 WORK AREAS (ALL PART OF ONE FURNITURE CLUSTER). PROVIDE EACH DESK AREA WITH TWO NIPR AND TWO SIPR DATA OUTLETS.
5. MOUNT DATA OUTLETS ADJACENT TO POWER OUTLETS, WITH A SEPARATION DISTANCE OF 6" BETWEEN THE EDGE OF DATA AND POWER FACEPLATES.
6. IN CONFERENCE ROOMS, FLOOR BOXES TO BE ALIGNED NEAR EDGE OF TABLES AND WITH TABLE LEGS FOR CABLE MANAGEMENT OF POWER, DATA, AND A/V DEVICES.
7. PROVIDE 6" LINEAR SEPARATION BETWEEN POWER AND DATA NETWORK CABLES.
8. PROVIDE 2 PORTS PER SYSTEM FURNITURE AND FLOOR BOXES IN MULTIPLES OF 4. TERMINATE TWO CABLES IN DESK FURNITURE PER CLASSIFIED NETWORK.
9. ENSURE PROPER PATHWAY SEPARATIONS PER TIA-569 CNSSAM TEMPEST REQUIREMENTS.

TELECOMMUNICATIONS KEYNOTES

1 CEILING MOUNTED OUTLET. MOUNT 3-6 INCHES ABOVE THE CEILING.

2 SURFACE MOUNT ALL TELECOMMUNICATIONS DEVICES WITHIN THIS ROOM.

KEY PLAN

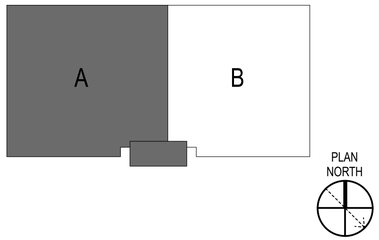

SYM	DESCRIPTION	DATE	APPR

NAVFAC

NORTH CAROLINA PROFESSIONAL SEAL 037183 ENGINEER EDWARD CHINNIS, JR.
6/25/2020
SEAL

HDR
440 S. CHURCH STREET, SUITE 1000
CHARLOTTE, NC 28202
TEL (704)338-6700
A/E INFO

APPROVED
FOR COMMANDER NAVFAC 7/10/2020
ACTIVITY
Approved by Emily Sylvester, Director of Installation Development Division
SATISFACTORY TO DATE 06/19/2020
DES EC DRW DJF CHK JAZ
PM/DM SGL/RMS
BRANCH MANAGER JAS
CHIEF ENG/ARCH EJA
FIRE PROTECTION

DEPARTMENT OF THE NAVY
NAVAL FACILITIES ENGINEERING COMMAND
NAVAL FACILITIES ENGINEERING COMMAND ~ MID-ATLANTIC
MIDLANT CI CORE
CAMP LEJEUNE - JACKSONVILLE, NC
MARSOC
JACKSONVILLE, NORTH CAROLINA
P1395 MARINE RAIDER HEADQUARTERS
FIRST FLOOR PLAN - TELECOMMUNICATIONS - AREA A

SCALE: AS NOTED
EPROJECT NO.: 1603164
CONSTR. CONTR. NO.
NAVFAC DRAWING NO. 12794420
SHEET 201 OF 228
ET101

DRAWFORM REVISION: 17 APRIL 2018

C:\rvt\2016\10136813-E-CENTRAL_P-1395 MARINE HQ_jeremy.forrest.rvt
6/25/2020 8:29:01 AM

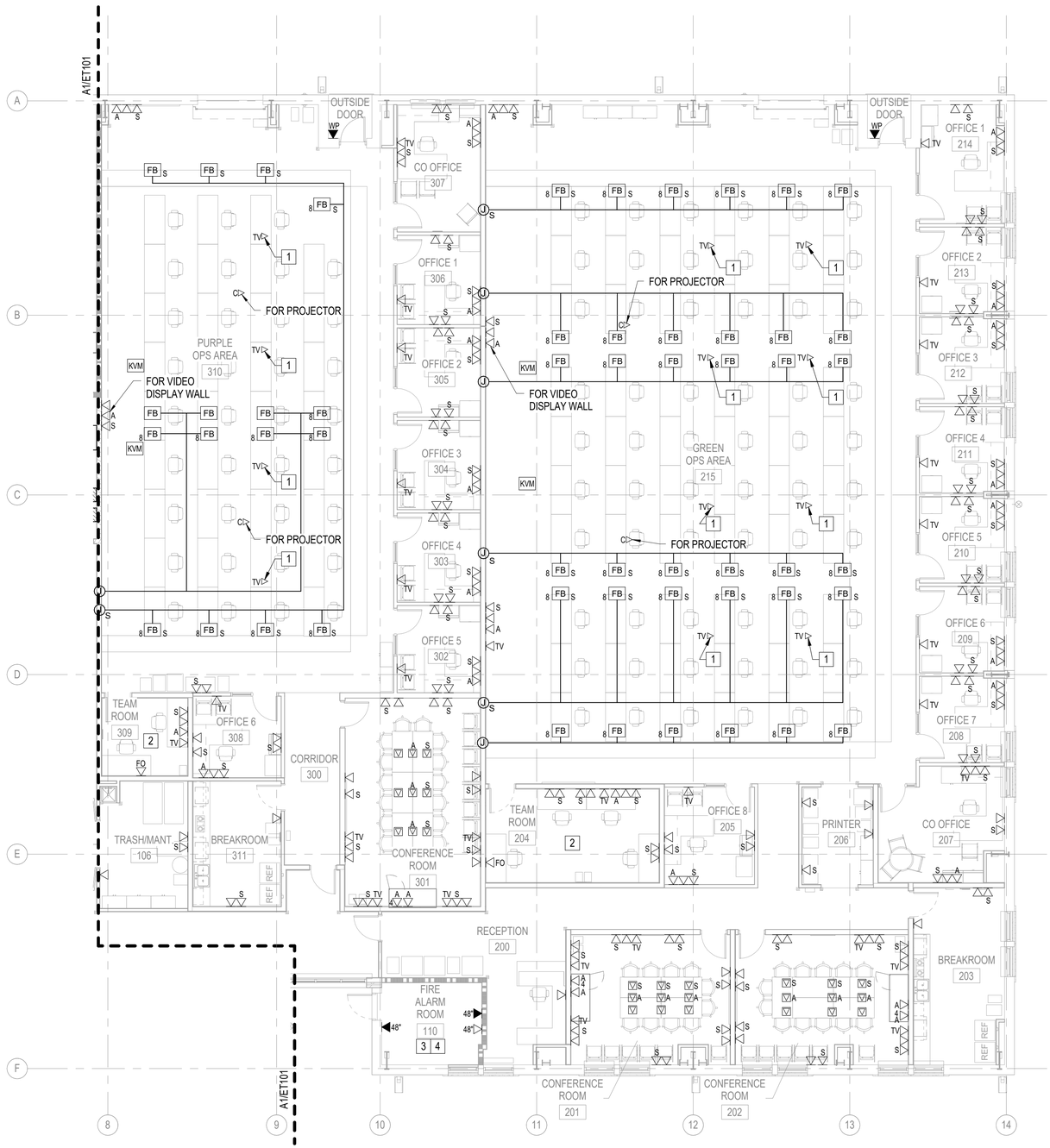

A1 FIRST FLOOR PLAN - TELECOMMUNICATIONS - AREA B

1/8" = 1'-0"

0 4' 8' 16'

GENERAL NOTES

1. PROVIDE SEPARATION DISTANCE OF 6" BETWEEN SIPRNET AND NIPRNET DEVICE OUTSIDE EDGE OF 5"x5" BOX.
2. PROVIDE MINIMUM SEPARATION DISTANCE OF 6" BETWEEN SIPRNET AND NIPRNET CABLE PATHWAYS AND TERMINATIONS.
3. IN INDIVIDUAL OFFICES, MOUNT TV OUTLETS AT 66"AFF. IN OPEN OFFICES MOUNT TV OUTLETS AT 72"AFF. LOCATE TV OUTLET ADJACENT TO THEIR RESPECTIVE POWER RECEPTACLE.
4. FLOOR BOX TO BE LIMITED TO SERVING A MAXIMUM OF 6 WORK AREAS (ALL PART OF ONE FURNITURE CLUSTER). PROVIDE EACH DESK AREA WITH TWO NIPR AND TWO SIPR DATA OUTLETS.
5. MOUNT DATA OUTLETS ADJACENT TO POWER OUTLETS, WITH A SEPARATION DISTANCE OF 6" BETWEEN THE EDGE OF DATA AND POWER FACEPLATES.
6. IN CONFERENCE ROOMS, FLOOR BOXES TO BE ALIGNED NEAR EDGE OF TABLES AND WITH TABLE LEGS FOR CABLE MANAGEMENT OF POWER, DATA, AND A/V DEVICES.
7. ENSURE PROPER PATHWAY SEPARATIONS PER TIA-569 CNSSAM TEMPEST REQUIREMENTS.

TELECOMMUNICATIONS KEYNOTES

1 CEILING MOUNTED OUTLET. MOUNT 3-6 INCHES ABOVE THE CEILING.

2 SURFACE MOUNT ALL TELECOMMUNICATIONS DEVICES WITHIN THIS ROOM.

3 OUTLETS TO BE LOCATED IN THE FIRE ALARM CONTROL PANEL. COORDINATE DURING INSTALLATION.

4 OUTLETS TO BE LOCATED IN THE BAS PANEL. COORDINATE DURING INSTALLATION.

KEY PLAN

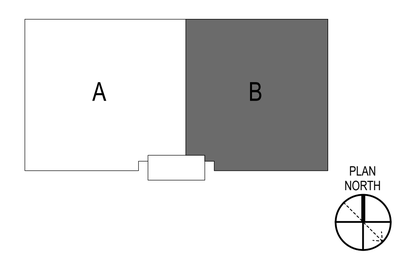

SYM	DESCRIPTION	DATE	APPR

NAVFAC

NORTH CAROLINA PROFESSIONAL SEAL 037183 ENGINEER EDWARD CHINNIS, JR. 6/25/2020

HDR
440 S. CHURCH STREET, SUITE 1000
CHARLOTTE, NC 28202
TEL (704)338-6700

A/E INFO

APPROVED
FOR COMMANDER NAVFAC 7/10/2020

ACTIVITY
Approved by Emily Sylvester, Director of Installation Development Division

SATISFACTORY TO DATE 06/19/2020

DES EC | DRW DJF | CHK JAZ

PM/DM SGL/RMS

BRANCH MANAGER JAS

CHIEF ENG/ARCH EJA

FIRE PROTECTION

DEPARTMENT OF THE NAVY
NAVAL FACILITIES ENGINEERING COMMAND
NAVAL FACILITIES ENGINEERING COMMAND ~ MID-ATLANTIC
MIDLANT CI CORE
CAMP LEJEUNE - JACKSONVILLE, NC
MARSOC
JACKSONVILLE, NORTH CAROLINA
P1395 MARINE RAIDER HEADQUARTERS
FIRST FLOOR PLAN - TELECOMMUNICATIONS - AREA B

SCALE: AS NOTED

EPROJECT NO.: 1603164

CONSTR. CONTR. NO.

NAVFAC DRAWING NO. 12794421

SHEET 202 OF 228

ET102

DRAWFORM REVISION: 17 APRIL 2018

C:\rvt\2016\10136813-E-CENTRAL_P-1395 MARINE HQ_jeremy.forrest.rvt
6/25/2020 8:29:05 AM

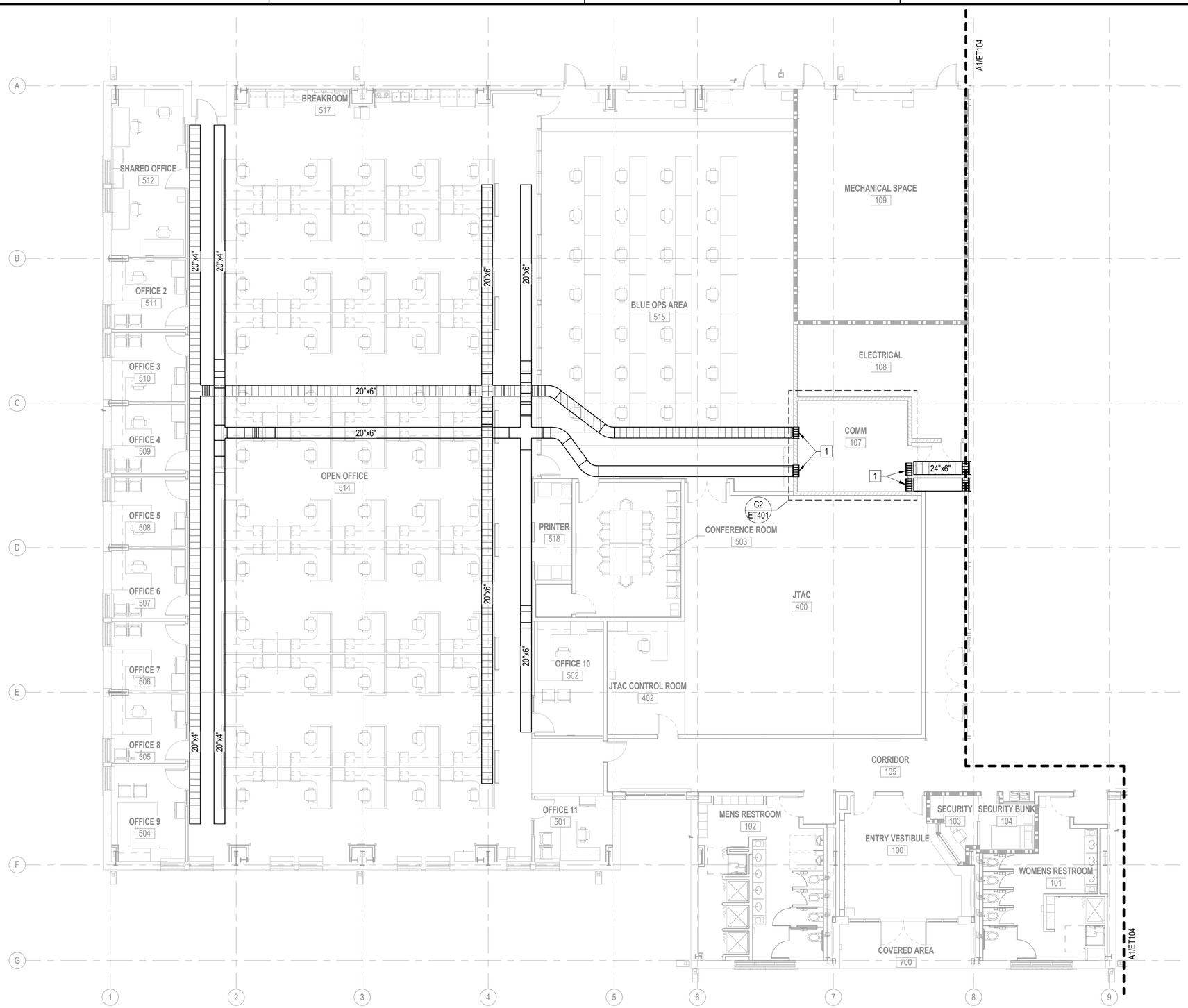

A1 FIRST FLOOR PLAN - NETWORK OVERHEAD HORIZONTAL PATHWAYS - AREA A

1/8" = 1'-0"

0 4' 8' 16'

GENERAL NOTES

1. PROVIDE A MINIMUM SEPARATION OF 12" BETWEEN THE CABLE TRAYS. INCREASE SEPARATION BY 6" EVERY 100'.
2. BOND CABLE TRAY TO GROUNDING INFRASTRUCTURE. REFER TO THE RISER DIAGRAMS ON THE ET600 SERIES SHEETS FOR ADDITIONAL INFORMATION.
3. RUN GROUND WIRE WITH THE CABLE TRAY AND BOND GROUND WIRE TO EACH SECTION OF THE CABLE TRAY.
4. ROUTE SIPRNET AND NIPRNET PATHWAYS FROM OPPOSITE DIRECTIONS, CROSSING AT 90 DEGREES BUT NEVER TOUCHING.
5. PROVIDE AND MAINTAIN A MINIMUM OF 12" ACCESS HEADROOM ABOVE THE CABLE TRAY SYSTEM AND/OR CABLE RUNWAY.
4. CABLE TRAY ROUTING REPRESENTS THE GENERAL DESIGN INTENT FOR ROUTING BUT SHALL BE CLOSELY COORDINATED IN THE FIELD WITH OTHER DISCIPLINES. THE CONTRACTOR SHALL MAKE ROUTING ADJUSTMENTS, DEVIATIONS, AND EXTENSIONS WHERE NECESSARY TO AVOID CONFLICTS WITH BUILDING STRUCTURAL SUPPORTS/BEAMS OTHER TRADES INSTALLATIONS AND AS REQUIRED TO PROVIDE A CONTINUOUS CABLE PATHWAY TO THE COMMUNICATION ROOM. CONTRACTOR SHALL FURNISH SLEEVES, CHASES, AND FIRE RATED SEALS WHERE CABLES AND TRAYS ARE REQUIRED TO PASS THRU FULL HEIGHT WALLS AND RATED WALL ASSEMBLIES.
5. ENSURE PROPER PATHWAY SEPARATIONS PER TIA-569 CNSSAM TEMPEST REQUIREMENTS.

NETWORK KEYNOTES

1 HIGH VOLUME CABLE PATHWAYS WITH INTEGRAL FIRESTOPPING AND SOUND ATTENUATION. BASIS OF DESIGN SHALL BE THE STI EZ PATH SERIES 44+.

KEY PLAN

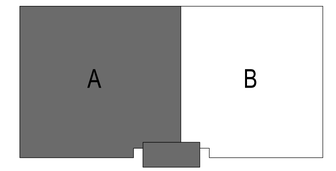

PLAN NORTH

SYM	DESCRIPTION	DATE	APPR

NAVFAC

NORTH CAROLINA PROFESSIONAL SEAL 037183 ENGINEER EDWARD CHINNIS, JR.
6/25/2020
SEAL

HDR
440 S. CHURCH STREET, SUITE 1000
CHARLOTTE, NC 28202
TEL (704)338-6700
A/E INFO

APPROVED
FOR COMMANDER NAVFAC 7/10/2020

ACTIVITY
Approved by Emily Sylvester, Director of Installation Development Division

SATISFACTORY TO DATE 06/19/2020

DES	EC	DRW	DJF	CHK	JAZ

PM/DM SGL/RMS
BRANCH MANAGER JAS
CHIEF ENG/ARCH EJA
FIRE PROTECTION

DEPARTMENT OF THE NAVY
NAVAL FACILITIES ENGINEERING COMMAND
NAVAL FACILITIES ENGINEERING COMMAND ~ MID-ATLANTIC
MIDLANT CI CORE
CAMP LEJEUNE - JACKSONVILLE, NC
MARSOC
JACKSONVILLE, NORTH CAROLINA
P1395 MARINE RAIDER HEADQUARTERS
FIRST FLOOR PLAN - NETWORK OVERHEAD HORIZONTAL PATHWAYS - AREA A

SCALE: AS NOTED
EPROJECT NO.: 1603164
CONSTR. CONTR. NO.
NAVFAC DRAWING NO. 12794422
SHEET 203 OF 228
ET103

DRAWFORM REVISION: 17 APRIL 2018

C:\vt\2016\10136813-E-CENTRAL_P-1395 MARINE HQ_jeremy.forrest.rvt
6/25/2020 8:29:10 AM

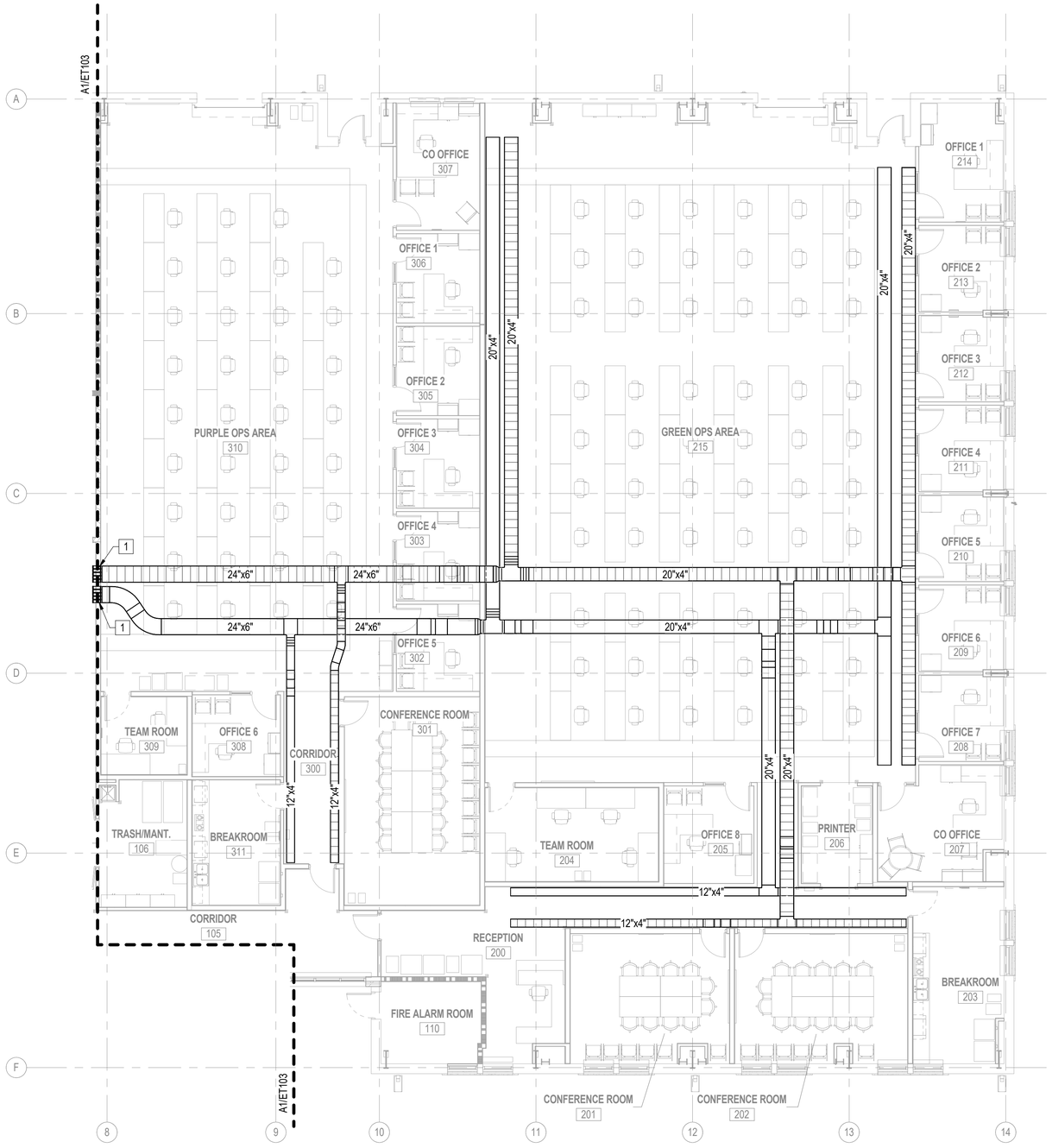

A1 FIRST FLOOR PLAN - NETWORK OVERHEAD HORIZONTAL PATHWAYS - AREA B

1/8" = 1'-0"

0 4' 8' 16'

GENERAL NOTES

1. PROVIDE A MINIMUM SEPARATION OF 12" BETWEEN THE CABLE TRAYS. INCREASE SEPARATION BY 6" EVERY 100'.
2. BOND CABLE TRAY TO GROUNDING INFRASTRUCTURE. REFER TO THE RISER DIAGRAMS ON THE ET600 SERIES SHEETS FOR ADDITIONAL INFORMATION.
3. RUN GROUND WIRE WITH THE CABLE TRAY AND BOND GROUND WIRE TO EACH SECTION OF THE CABLE TRAY.
4. ROUTE SIPRNET AND NIPRNET PATHWAYS FROM OPPOSITE DIRECTIONS, CROSSING AT 90 DEGREES BUT NEVER TOUCHING.
5. PROVIDE AND MAINTAIN A MINIMUM OF 12" ACCESS HEADROOM ABOVE THE CABLE TRAY SYSTEM AND/OR CABLE RUNWAY.
4. CABLE TRAY ROUTING REPRESENTS THE GENERAL DESIGN INTENT FOR ROUTING BUT SHALL BE CLOSELY COORDINATED IN THE FIELD WITH OTHER DISCIPLINES. THE CONTRACTOR SHALL MAKE ROUTING ADJUSTMENTS, DEVIATIONS, AND EXTENSIONS WHERE NECESSARY TO AVOID CONFLICTS WITH BUILDING STRUCTURAL SUPPORTS/BEAMS OTHER TRADES INSTALLATIONS AND AS REQUIRED TO PROVIDE A CONTINUOUS CABLE PATHWAY TO THE COMMUNICATION ROOM. CONTRACTOR SHALL FURNISH SLEEVES, CHASES, AND FIRE RATED SEALS WHERE CABLES AND TRAYS ARE REQUIRED TO PASS THRU FULL HEIGHT WALLS AND RATED WALL ASSEMBLIES.
5. ENSURE PROPER PATHWAY SEPARATIONS PER TIA-569 CNSSAM TEMPEST REQUIREMENTS.

NETWORK KEYNOTES

1 HIGH VOLUME CABLE PATHWAYS WITH INTEGRAL FIRESTOPPING AND SOUND ATTENUATION. BASIS OF DESIGN SHALL BE THE STI EZ PATH SERIES 44+.

KEY PLAN

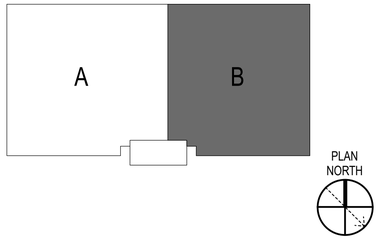

SYM	DESCRIPTION	DATE	APPR

NAVFAC

NORTH CAROLINA PROFESSIONAL SEAL 037183 ENGINEER EDWARD CHINNIS, JR.
6/25/2020
SEAL

HDR
440 S. CHURCH STREET, SUITE 1000
CHARLOTTE, NC 28202
TEL (704)338-6700
A/E INFO

APPROVED
FOR COMMANDER NAVFAC 7/10/2020
ACTIVITY
Approved by Emily Sylvester, Director of Installation Development Division
SATISFACTORY TO DATE 06/19/2020
DES EC DRW DJF CHK JAZ
PM/DM SGL/RMS
BRANCH MANAGER JAS
CHIEF ENG/ARCH EJA
FIRE PROTECTION

DEPARTMENT OF THE NAVY
NAVAL FACILITIES ENGINEERING COMMAND
NAVAL FACILITIES ENGINEERING COMMAND ~ MID-ATLANTIC
CAMP LEJEUNE - JACKSONVILLE, NC
MIDLANT CI CORE
MARSOC
JACKSONVILLE, NORTH CAROLINA
P1395 MARINE RAIDER HEADQUARTERS
FIRST FLOOR PLAN - NETWORK OVERHEAD HORIZONTAL PATHWAYS - AREA B

SCALE: AS NOTED
EPROJECT NO.: 1603164
CONSTR. CONTR. NO.
NAVFAC DRAWING NO. 12794423
SHEET 204 OF 228
ET104
DRAWFORM REVISION: 17 APRIL 2018

C:\rvt\2016\10136813-E-CENTRAL_P-1395 MARINE HQ_jeremy.forrest.rvt
6/25/2020 8:29:13 AM

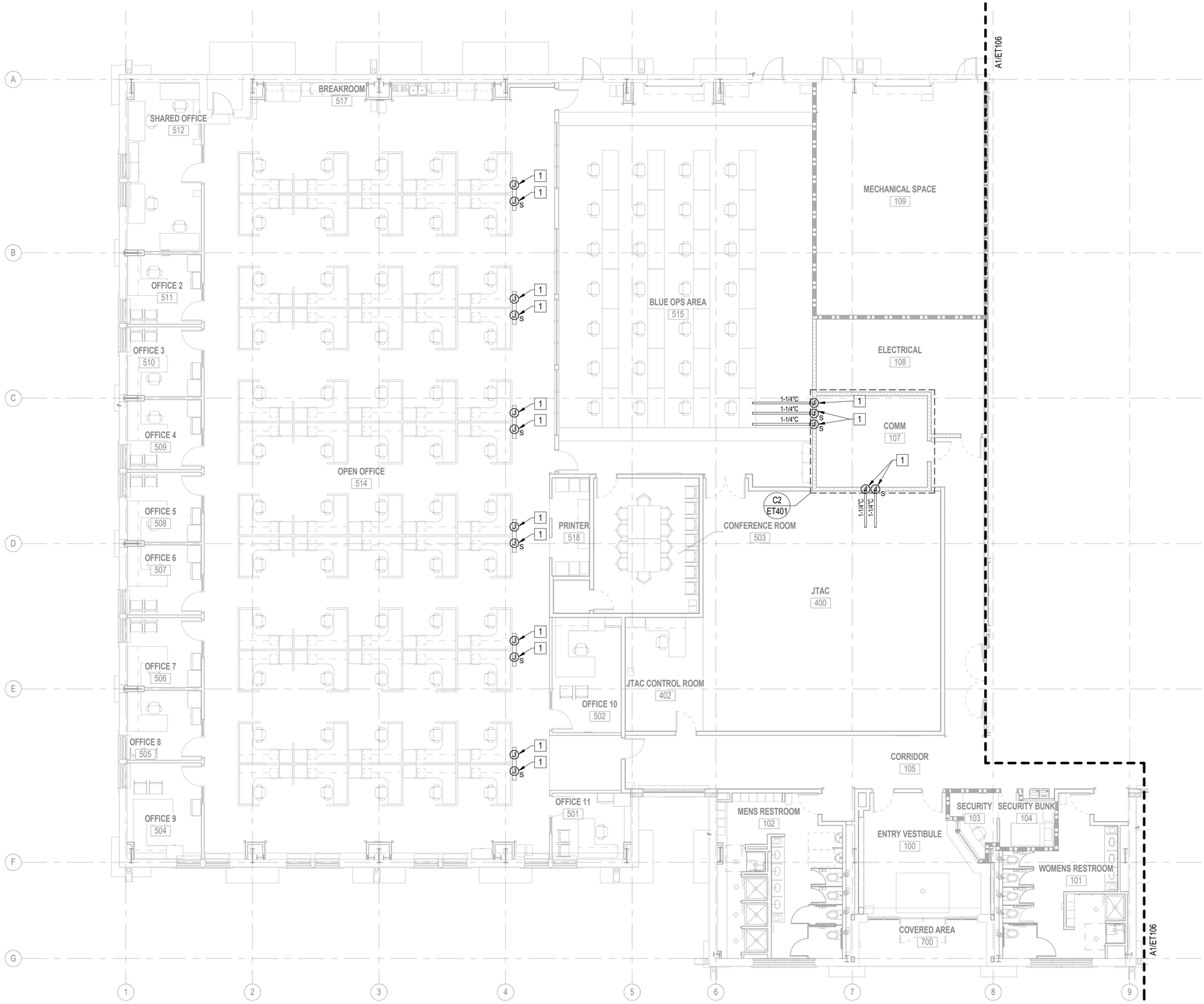

A1 FIRST FLOOR PLAN - NETWORK BELOW FLOOR ROUTING - AREA A

1/8" = 1'-0"

0 4' 8' 16'

GENERAL NOTES

1. PROVIDE A MINIMUM SEPARATION OF 12" BETWEEN THE NIPR AND SIPR CABLE TRAYS.
2. BOND CABLE TRAY TO GROUNDING INFRASTRUCTURE. REFER TO THE RISER DIAGRAMS ON THE ET600 SERIES SHEETS FOR ADDITIONAL INFORMATION.
3. RUN GROUND WIRE WITH THE CABLE TRAY AND BOND GROUND WIRE TO EACH SECTION OF THE CABLE TRAY. BOND GROUND WIRE TO THE RAISED GROUND FLOOR.
4. ROUTE SIPRNET AND NIPRNET PATHWAYS FROM OPPOSITE DIRECTIONS, CROSSING AT 90 DEGREES BUT NEVER TOUCHING.
5. FOR UNDERFLOOR CABLE TRAY, COORDINATE FLOOR PENETRATIONS AND FLOOR PEDESTAL LOCATIONS WITH OTHER CONTRACTORS AND MODULAR FURNITURE LAYOUT. PROVIDE ALL FLEXIBLE CONDUIT BOXES AND MATERIALS AS NECESSARY FOR CONNECTIONS.
6. REFER TO SHEET ET102 FOR LOCATION AND QUANTITY OF DATA DEVICES AND DATA BOXES.
7. PROVIDE A MINIMUM OF 2" OF FREE SPACE BETWEEN THE TOP OF THE CABLE TRAY SIDE RAILS AND THE UNDERSIDE OF THE STRINGERS.
8. BOND ALL METAL PARTS OF THE ACCESS FLOOR TO GROUND. FOLLOW THE ACCESS FLOOR MANUFACTURER'S GUIDELINES AND ALL APPLICABLE CODES.
9. ENSURE PROPER PATHWAY SEPARATIONS PER TIA-569 CNSSAM TEMPEST REQUIREMENTS.

NETWORK KEYNOTES

1 ACCESS PATHWAY FROM CEILING TO BELOW FLOOR CONCEALED IN WALL.

KEY PLAN

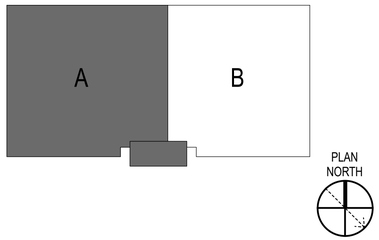

SYM	DESCRIPTION	DATE	APPR

NAVFAC

NORTH CAROLINA PROFESSIONAL SEAL 037183 ENGINEER EDWARD CHINNIS, JR.
6/25/2020
SEAL

HDR
440 S. CHURCH STREET, SUITE 1000
CHARLOTTE, NC 28202
TEL (704)338-6700
A/E INFO

APPROVED
FOR COMMANDER NAVFAC 7/10/2020

ACTIVITY
Approved by Emily Sylvester, Director of Installation Development Division

SATISFACTORY TO DATE 06/19/2020

DES	EC	DRW	DJF	CHK	JAZ

PM/DM SGL/RMS
BRANCH MANAGER JAS
CHIEF ENG/ARCH EJA
FIRE PROTECTION

DEPARTMENT OF THE NAVY
NAVAL FACILITIES ENGINEERING COMMAND
NAVAL FACILITIES ENGINEERING COMMAND ~ MID-ATLANTIC
MIDLANT CI CORE
CAMP LEJEUNE - JACKSONVILLE, NC
MARSOC
JACKSONVILLE, NORTH CAROLINA
P1395 MARINE RAIDER HEADQUARTERS
FIRST FLOOR PLAN - NETWORK BELOW FLOOR ROUTING - AREA A

SCALE: AS NOTED
EPROJECT NO.: 1603164
CONSTR. CONTR. NO.
NAVFAC DRAWING NO. 12794424
SHEET 205 OF 228
ET105

DRAWFORM REVISION: 17 APRIL 2018

C:\rvt\2016\10136813-E-CENTRAL_P-1395 MARINE HQ_jeremy.forrest.rvt
6/25/2020 8:29:18 AM



A1 FIRST FLOOR PLAN - NETWORK BELOW FLOOR ROUTING - AREA B

1/8" = 1'-0"

0 4' 8' 16'

GENERAL NOTES

1. PROVIDE A MINIMUM SEPARATION OF 12" BETWEEN THE NIPR AND SIPR CABLE TRAYS.
2. BOND CABLE TRAY TO GROUNDING INFRASTRUCTURE. REFER TO THE RISER DIAGRAMS ON THE ET600 SERIES SHEETS FOR ADDITIONAL INFORMATION.
3. RUN GROUND WIRE WITH THE CABLE TRAY AND BOND GROUND WIRE TO EACH SECTION OF THE CABLE TRAY. BOND GROUND WIRE TO THE RAISED GROUND FLOOR.
4. ROUTE SIPRNET AND NIPRNET PATHWAYS FROM OPPOSITE DIRECTIONS, CROSSING AT 90 DEGREES BUT NEVER TOUCHING.
5. FOR UNDERFLOOR CABLE TRAY, COORDINATE FLOOR PENETRATIONS AND FLOOR PEDESTAL LOCATIONS WITH OTHER CONTRACTORS AND MODULAR FURNITURE LAYOUT. PROVIDE ALL FLEXIBLE CONDUIT BOXES AND MATERIALS AS NECESSARY FOR CONNECTIONS.
6. REFER TO SHEET ET102 FOR LOCATION AND QUANTITY OF DATA DEVICES AND DATA BOXES.
7. PROVIDE A MINIMUM OF 2" OF FREE SPACE BETWEEN THE TOP OF THE CABLE TRAY SIDE RAILS AND THE UNDERSIDE OF THE STRINGERS.
8. BOND ALL METAL PARTS OF THE ACCESS FLOOR TO GROUND. FOLLOW THE ACCESS FLOOR MANUFACTURER'S GUIDELINES AND ALL APPLICABLE CODES.
9. ENSURE PROPER PATHWAY SEPARATIONS PER TIA-569 CNSSAM TEMPEST REQUIREMENTS.

NETWORK KEYNOTES

1 ACCESS PATHWAY FROM CEILING TO BELOW FLOOR CONCEALED IN WALL.

KEY PLAN

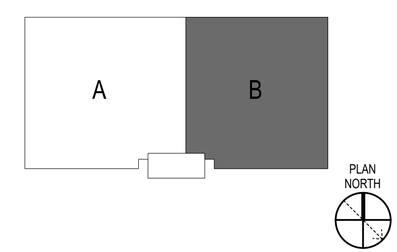

SYM	DESCRIPTION	DATE	APPR

NAVFAC

NORTH CAROLINA PROFESSIONAL SEAL 037183 ENGINEER EDWARD CHINNIS, JR.
6/25/2020
SEAL

HDR
440 S. CHURCH STREET, SUITE 1000
CHARLOTTE, NC 28202
TEL (704)338-6700
A/E INFO

APPROVED
FOR COMMANDER NAVFAC 7/10/2020
ACTIVITY
Approved by Emily Sylvester, Director of Installation Development Division
SATISFACTORY TO DATE 06/19/2020
DES EC DRW DJF CHK JAZ
PM/DM SGL/RMS
BRANCH MANAGER JAS
CHIEF ENG/ARCH EJA
FIRE PROTECTION

DEPARTMENT OF THE NAVY
NAVAL FACILITIES ENGINEERING COMMAND
NAVAL FACILITIES ENGINEERING COMMAND ~ MID-ATLANTIC
MIDLANT CI CORE
CAMP LEJEUNE - JACKSONVILLE, NC
MARSOC
JACKSONVILLE, NORTH CAROLINA
P1395 MARINE RAIDER HEADQUARTERS
FIRST FLOOR PLAN - NETWORK BELOW FLOOR ROUTING - AREA B

SCALE: AS NOTED
EPROJECT NO.: 1603164
CONSTR. CONTR. NO.
NAVFAC DRAWING NO. 12794425
SHEET 206 OF 228
ET106
DRAWFORM REVISION: 17 APRIL 2018

C:\rvt\2016\10136813-E-CENTRAL_P-1395 MARINE HQ_jeremy.forrest.rvt
6/25/2020 8:29:21 AM

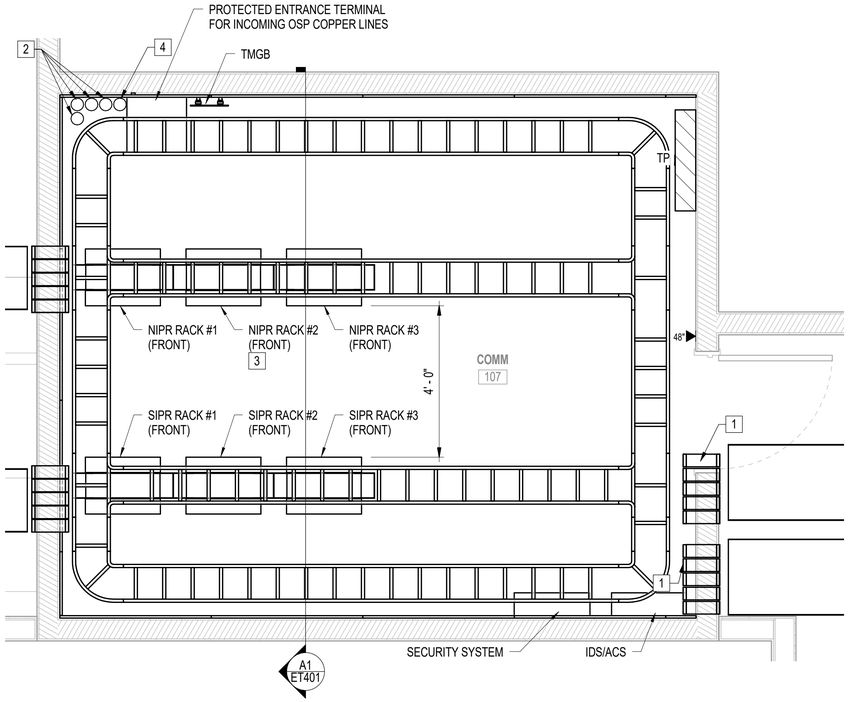

C2 COMM ROOM 107 - ENLARGED PLAN

1/2" = 1'-0" (ET101)

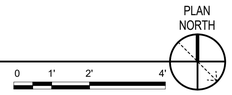

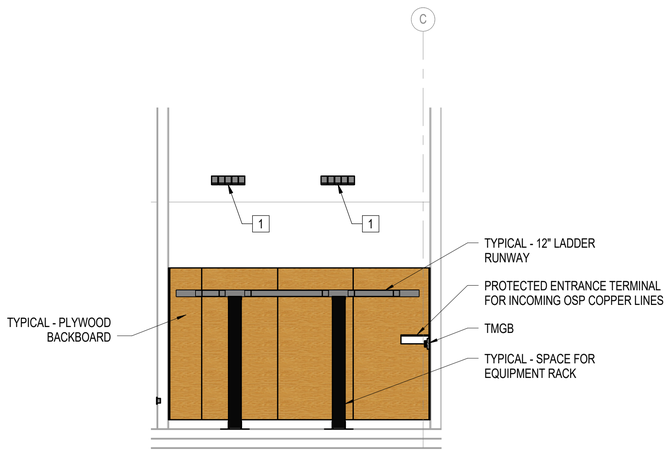

A1 COMM ROOM 107 SECTION - PLAN WEST

1/4" = 1'-0" (ET401)

0 2' 4' 8'

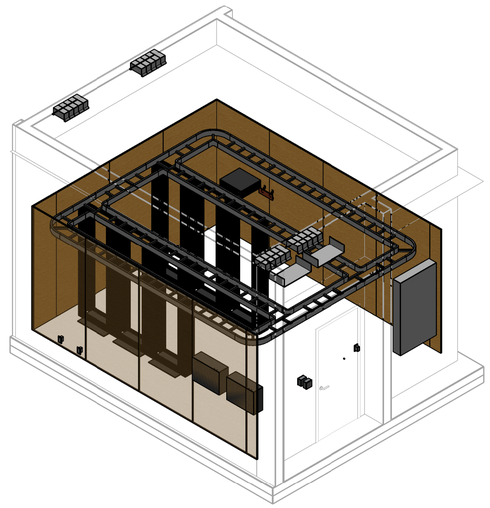

A2 COMM ROOM 107 - ISOMETERIC

NTS

GENERAL NOTES

1. MAINTAIN A MINIMUM OF 12" OF SEPARATION BETWEEN SIPR EQUIPMENT AND NIPR WIRELINES THAT DIRECTLY LEAVE COMM ROOM 107.
2. MAINTAIN A MINIMUM OF 6" OF SEPARATION BETWEEN SIPR CABLES AND NIPR CABLES THAT DIRECTLY LEAVE COMM ROOM 107.
3. PRIOR TO ROUGH-IN, COORDINATE MOUNTING HEIGHT AND LOCATION OF ELECTRICAL DEVICES ONSITE TO AVOID POTENTIAL CONFLICTS WITH TELECOM PASSIVE INFRASTRUCTURE.

NETWORK KEYNOTES

1 HIGH VOLUME CABLE PATHWAYS WITH INTEGRAL FIRESTOPPING AND SOUND ATTENUATION. BASIS OF DESIGN SHALL BE THE STI EZ PATH SERIES 44+.

2 FOUR 4" CONDUITS ROUTED BELOW GRADE TO EXISTING UTILITY MANHOLE AT EVERETTE CREEK RD. SEE SHEETS ES101 AND ET601 FOR ADDITIONAL INFORMATION. FIELD COORDINATE LOCATIONS OF CONDUITS PRIOR TO INSTALLATION.

3 LOCATION OF KRONE BLOCKS.

4 4" CONDUIT ROUTED UNDERGROUND TO ANTENNA PAD. FIELD COORDINATE LOCATIONS OF CONDUITS PRIOR TO INSTALLATION.

SYM	DESCRIPTION	DATE	APPR

NAVFAC

NORTH CAROLINA PROFESSIONAL SEAL 037183 ENGINEER EDWARD CHINNIS, JR.
6/25/2020
SEAL

HDR
440 S. CHURCH STREET, SUITE 1000
CHARLOTTE, NC 28202
TEL (704)338-6700

A/E INFO

APPROVED
Jeremy A. Sylvester, P.E.
FOR COMMANDER NAVFAC 7/10/2020

ACTIVITY
Approved by Emily Sylvester, Director of Installation Development Division

SATISFACTORY TO DATE 06/19/2020

DES	EC	DRW	DJF	CHK	JAZ

PM/DM SGL/RMS
BRANCH MANAGER JAS
CHIEF ENG/ARCH EJA
FIRE PROTECTION

DEPARTMENT OF THE NAVY
NAVAL FACILITIES ENGINEERING COMMAND
NAVAL FACILITIES ENGINEERING COMMAND ~ MID-ATLANTIC
MIDLANT CI CORE
CAMP LEJEUNE - JACKSONVILLE, NC
MARSOC
JACKSONVILLE, NORTH CAROLINA
P1395 MARINE RAIDER HEADQUARTERS
ENLARGED PLANS

SCALE: AS NOTED
EPROJECT NO.: 1603164
CONSTR. CONTR. NO.
NAVFAC DRAWING NO. 12794426
SHEET 207 OF 228
ET401

DRAWFORM REVISION: 17 APRIL 2018

C:\rvt\2016\10136813-E-CENTRAL_P-1395 MARINE HQ_jeremy.forrest.rvt
6/25/2020 8:29:41 AM

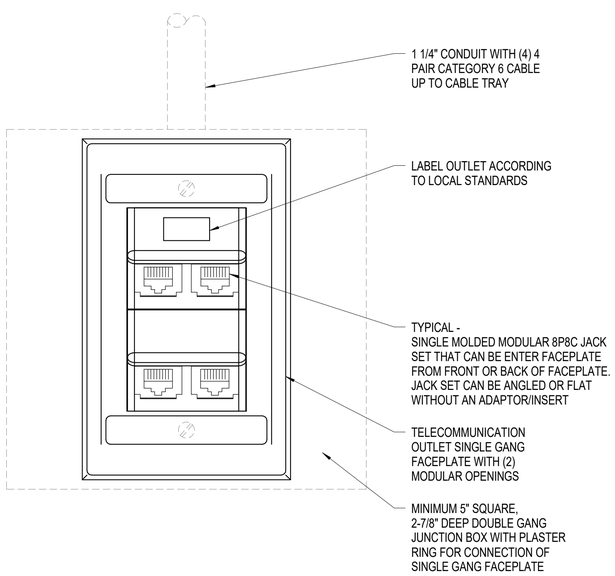

C1 SECURE OUTLET DETAIL (S)

NTS

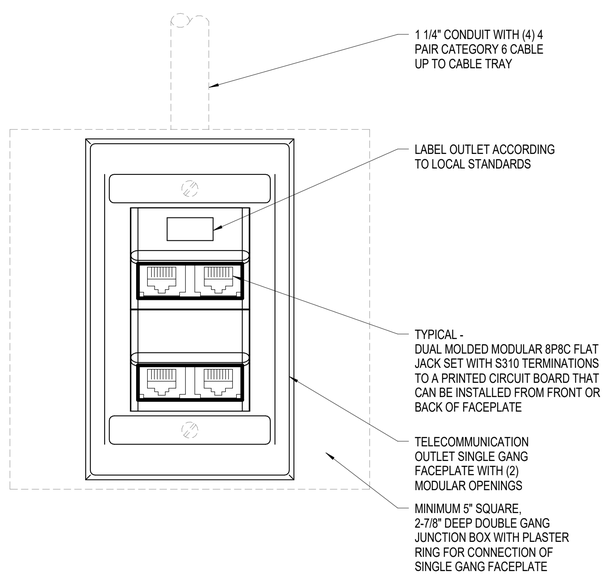

C2 NON-SECURE OUTLET DETAIL

NTS

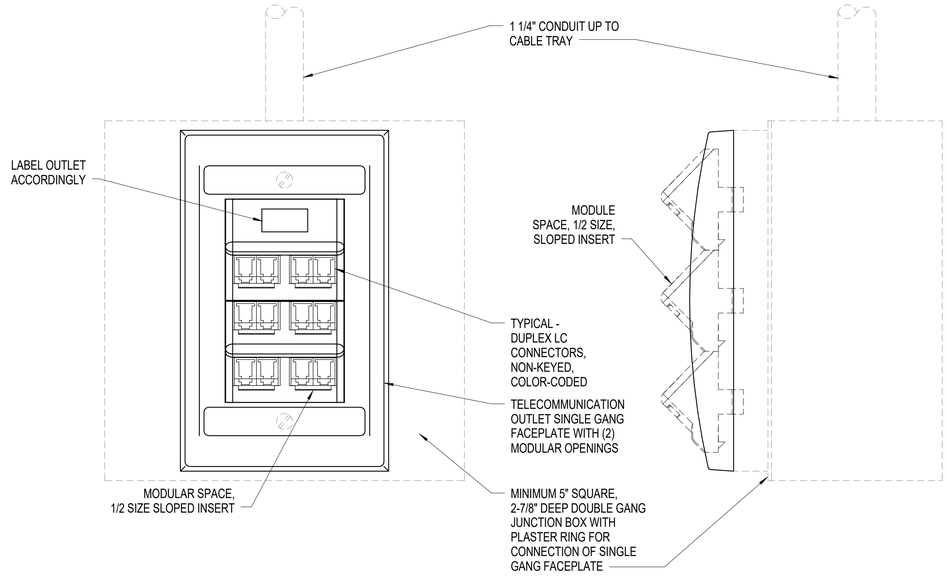

C3 SECURE DATA OUTLET DETAIL (FO)

NTS

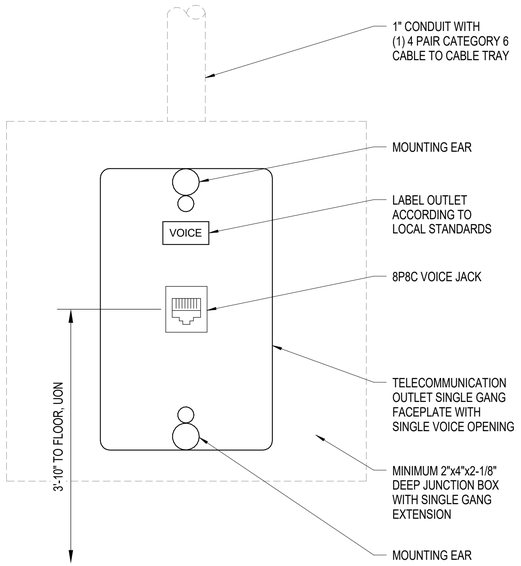

A1 SINGLE VOICE (POTS) OUTLET DETAIL

NTS

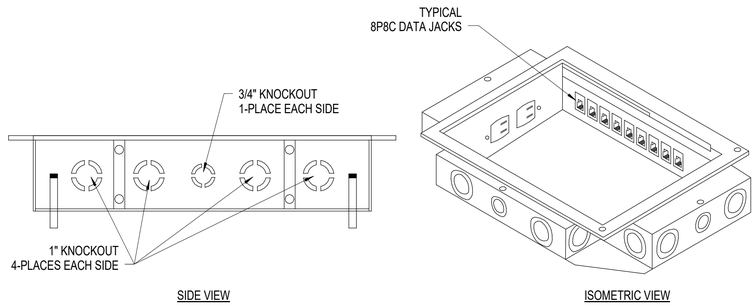

A2 FLOOR OUTLET - STANDARD TELE/DATA DETAIL

NTS

FLOOR OUTLET NOTES:

1. BACKBOX TO BE RATED FOR FLOOR CONSTRUCTION (WOOD, CONCRETE, RAISED FLOOR, ETC.) OF LOCATION WHERE INSTALLED.
2. FOR BACKBOX LOCATED IN ACCESS FLOORING SYSTEM, COORDINATE BACKBOX AND FACEPLATE WITH ACCESS FLOORING SYSTEM PRIOR TO INSTALLATION.

NETWORK COLOR MATRIX

NETWORK	COLOR JACKET COLOR	NOTES
NIPRNET	GREEN	-
SIPRNET	RED	-
VOICE	GREEN	FOR TELEPHONE NOT ROUTED THROUGH THE VOIP DATA SWITCH.

SYM | DESCRIPTION | DATE | APPR

NAVFAC

NORTH CAROLINA PROFESSIONAL SEAL 037183 ENGINEER EDWARD CHINNIS, JR.
6/25/2020

HDR
440 S. CHURCH STREET, SUITE 1000
CHARLOTTE, NC 28202
TEL (704)338-6700
A/E INFO

APPROVED
FOR COMMANDER NAVFAC 7/01/2020
ACTIVITY
Approved by Emily Sylvester, Director of Installation Development Division
SATISFACTORY TO DATE 06/19/2020
DES EC | DRW DJF | CHK JAZ
PM/DM SGL/RMS
BRANCH MANAGER JAS
CHIEF ENG/ARCH EJA
FIRE PROTECTION

DEPARTMENT OF THE NAVY
NAVAL FACILITIES ENGINEERING COMMAND
MIDLANT CI CORE
MARSOC
NAVAL FACILITIES ENGINEERING COMMAND ~ MID-ATLANTIC
CAMP LEJEUNE · JACKSONVILLE, NC
JACKSONVILLE, NORTH CAROLINA
P1395 MARINE RAIDER HEADQUARTERS
TELECOMMUNICATIONS DETAILS

SCALE: AS NOTED
EPROJECT NO.: 1603164
CONSTR. CONTR. NO.
NAVFAC DRAWING NO. 12794427
SHEET 208 OF 228
ET501
DRAWFORM REVISION: 17 APRIL 2018

C:\rvt\20181019\3693-SE-CENTRAL_P-1395 MARINE HQ_jeremy.forrest.rvt
6/25/2020 8:29:42 AM

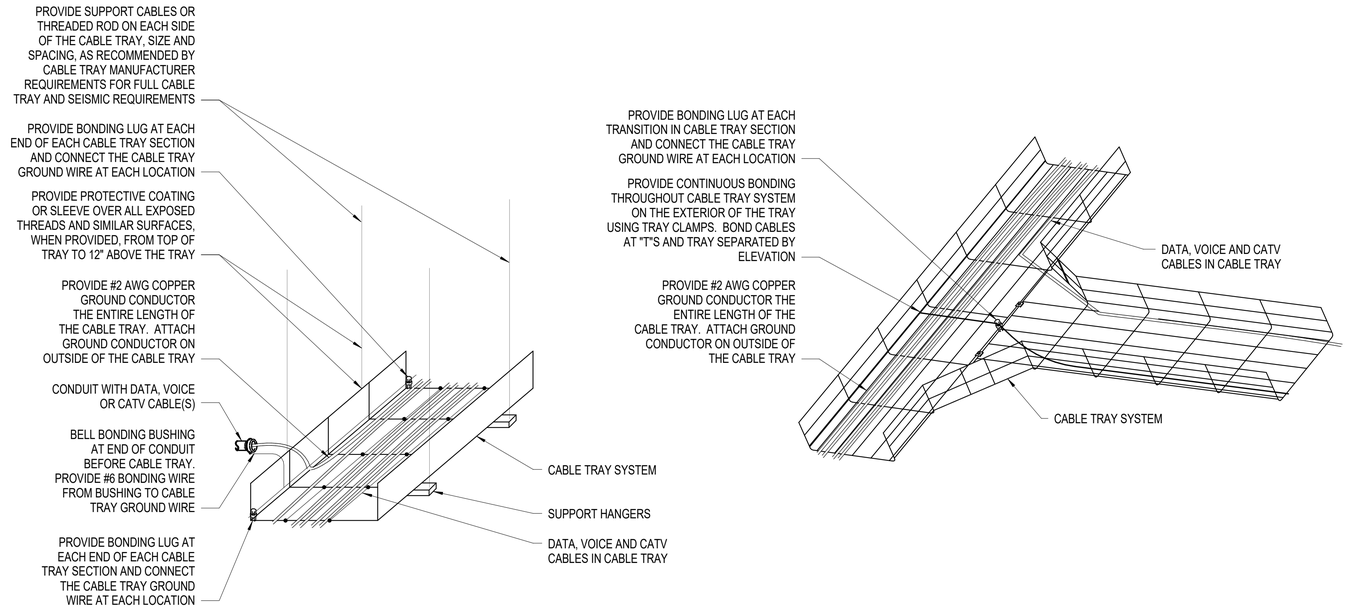

C1 TYPICAL CABLE TRAY MOUNTING AND BONDING DETAIL

NTS

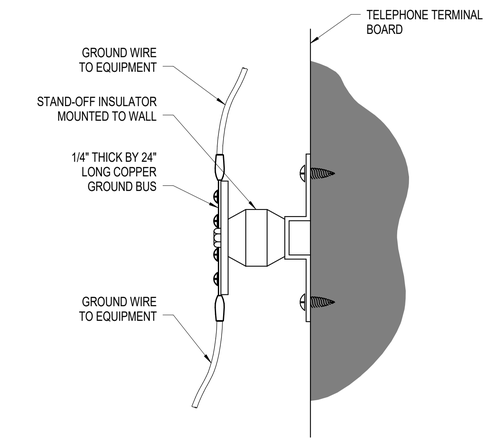

C4 TYPICAL TMGB SIDE VIEW DETAIL

NTS

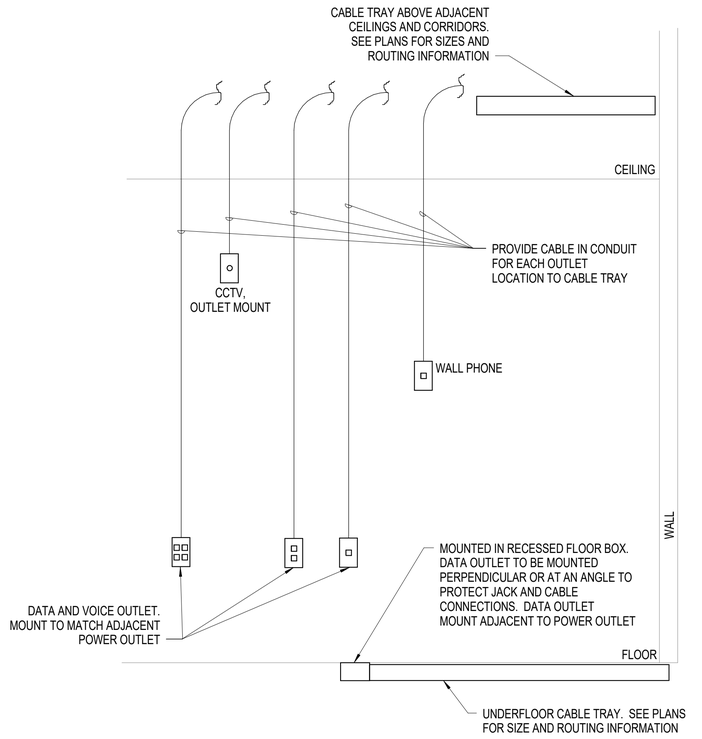

A1 TYPICAL OUTLET RISER MOUNTING DETAIL

NTS

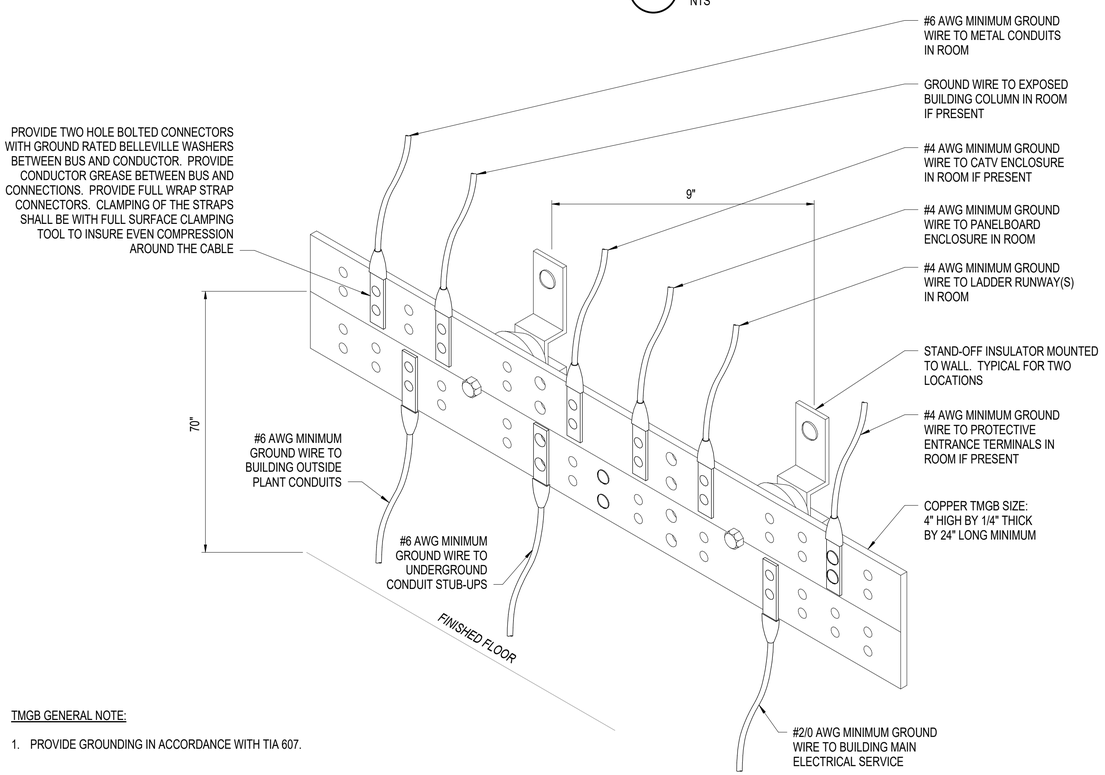

TMGB GENERAL NOTE:

1. PROVIDE GROUNDING IN ACCORDANCE WITH TIA 607.

A3 TELECOMMUNICATION MAIN GROUND BAR (TMGB) DETAIL

NTS

SYM	DESCRIPTION	DATE	APPR

NAVFAC

NORTH CAROLINA PROFESSIONAL SEAL 037183 ENGINEER EDWARD CHINNIS, JR.
6/25/2020
SIGN

HDR
440 S. CHURCH STREET, SUITE 1000
CHARLOTTE, NC 28202
TEL (704)338-6700
A/E INFO.

APPROVED
FOR COMMANDER NAVFAC 7/16/2020
ACTIVITY
Approved by Emily Sylvester, Director of Installation Development Division
SATISFACTORY TO DATE 06/19/2020

DES	EC	DRW	DJF	CHK	JAZ

PM/DM SGL/RMS
BRANCH MANAGER JAS
CHIEF ENG/ARCH EJA
FIRE PROTECTION

DEPARTMENT OF THE NAVY
NAVAL FACILITIES ENGINEERING COMMAND
MIDLANT CI CORE
MARSOC
NAVAL FACILITIES ENGINEERING COMMAND ~ MID-ATLANTIC
CAMP LEJEUNE ~ JACKSONVILLE, NC
JACKSONVILLE, NORTH CAROLINA
P1395 MARINE RAIDER HEADQUARTERS
TELECOMMUNICATIONS DETAILS

SCALE: AS NOTED
EPROJECT NO.: 1603164
CONSTR. CONTR. NO.
NAVFAC DRAWING NO. 12794428
SHEET 209 OF 228
ET502

DRAWFORM REVISION: 17 APRIL 2018

C:\e420181603683\3-E-CENTRAL_P-1395 MARINE HQ_jeremy.forrest.rvt
6/25/2020 8:29:43 AM

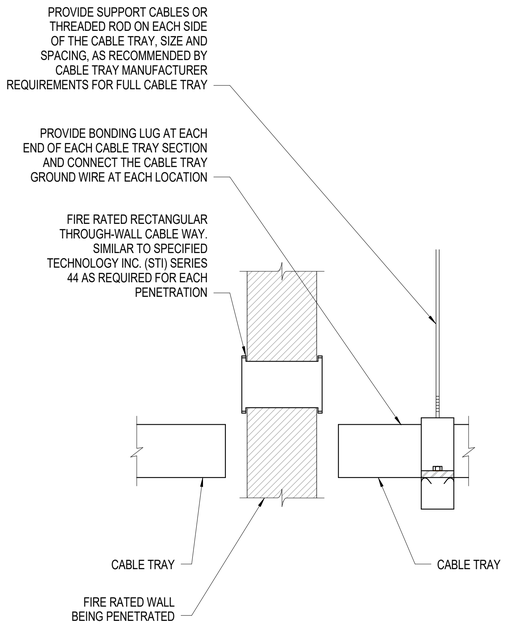

C1 TYPICAL CABLE TRAY WALL PENETRATION DETAIL

NTS

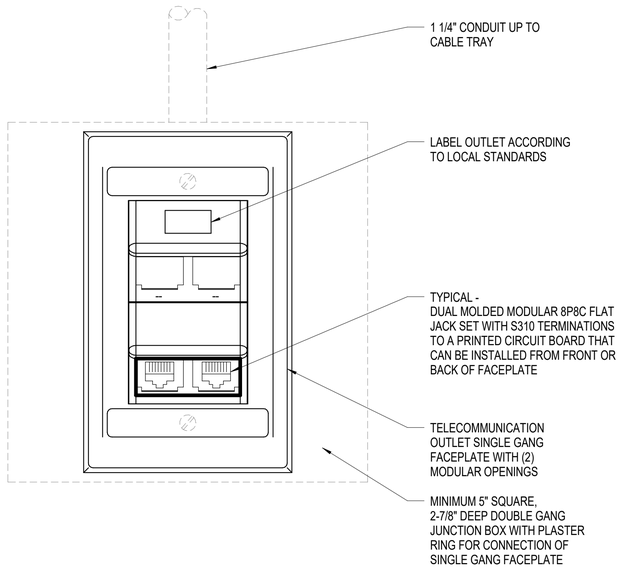

C3 CATV OUTLET DETAIL

NTS

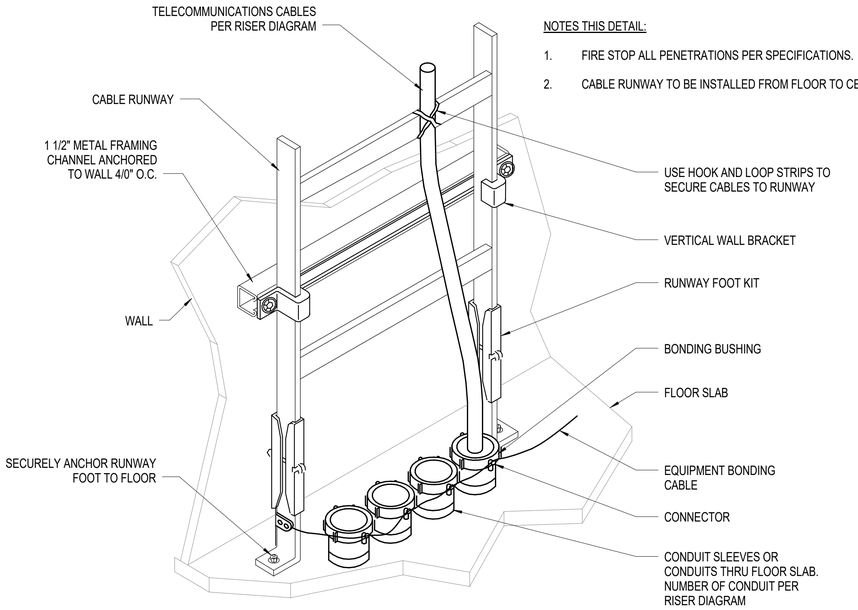

NOTES THIS DETAIL:

1. FIRE STOP ALL PENETRATIONS PER SPECIFICATIONS.
2. CABLE RUNWAY TO BE INSTALLED FROM FLOOR TO CEILING.

A1 CABLE - TELECOMMUNICATIONS ROOM VERTICAL RUNWAY MOUNTING DETAIL

NTS

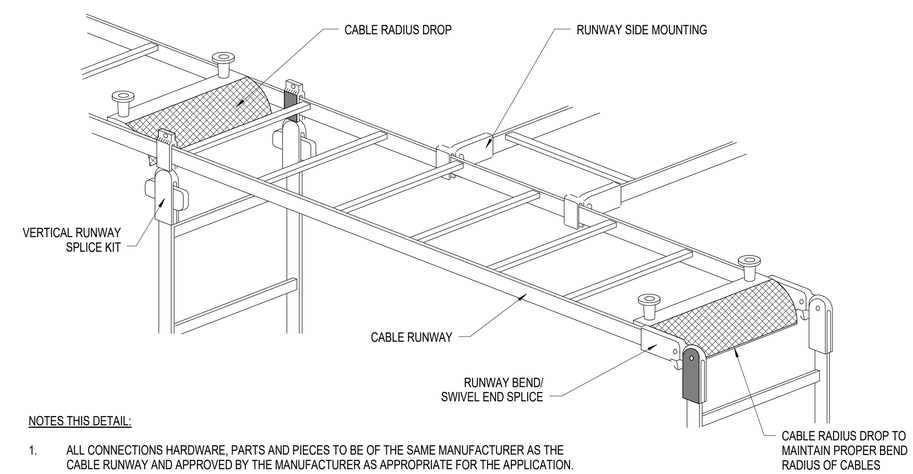

NOTES THIS DETAIL:

1. ALL CONNECTIONS HARDWARE, PARTS AND PIECES TO BE OF THE SAME MANUFACTURER AS THE CABLE RUNWAY AND APPROVED BY THE MANUFACTURER AS APPROPRIATE FOR THE APPLICATION.

A3 TYPICAL TELECOMMUNICATION ROOM RUNWAY CONNECTIONS DETAIL

NTS

SYM	DESCRIPTION	DATE	APPR

NAVFAC

NORTH CAROLINA PROFESSIONAL SEAL 037183 ENGINEER EDWARD CHINNIS, JR.
6/25/2020
SEAL

HDR
440 S. CHURCH STREET, SUITE 1000
CHARLOTTE, NC 28202
TEL (704)338-6700

A/E INFO

APPROVED
Emily Sylvester, Director of Installation Development Division
FOR COMMANDER NAVFAC 7/10/2020

ACTIVITY
Approved by Emily Sylvester, Director of Installation Development Division

SATISFACTORY TO DATE	06/19/2020				
DES	EC	DRW	DJF	CHK	JAZ
PM/DM	SGL/RMS				
BRANCH MANAGER	JAS				
CHIEF ENG/ARCH	EJA				
FIRE PROTECTION					

DEPARTMENT OF THE NAVY
NAVAL FACILITIES ENGINEERING COMMAND
NAVAL FACILITIES ENGINEERING COMMAND ~ MID-ATLANTIC
CAMP LEJEUNE - JACKSONVILLE, NC
MIDLANT CI CORE
MARSOC
JACKSONVILLE, NORTH CAROLINA
P1395 MARINE RAIDER HEADQUARTERS
TELECOMMUNICATIONS DETAILS

SCALE: AS NOTED
EPROJECT NO.: 1603164
CONSTR. CONTR. NO.
NAVFAC DRAWING NO. 12794429
SHEET 210 OF 228
ET503

DRAWFORM REVISION: 17 APRIL 2018

C:\vt\2016\10136813-E-CENTRAL_P-1395 MARINE HQ_jeremy.forrest.rvt
6/25/2020 8:29:45 AM

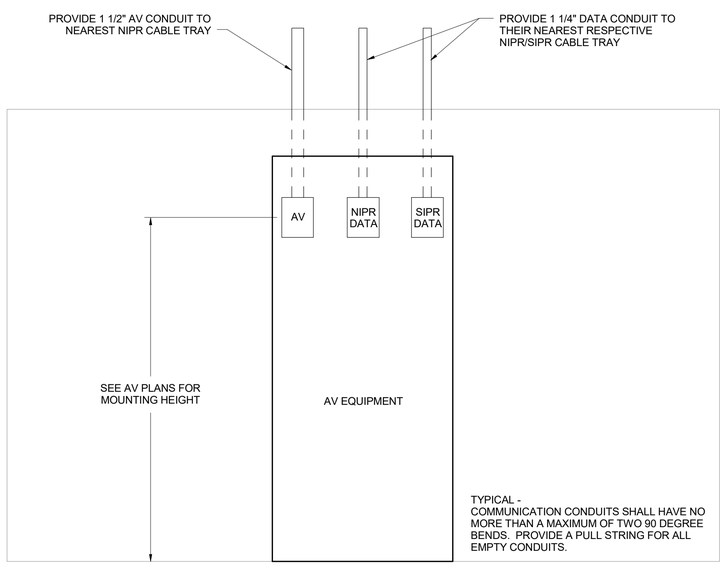

C1 J-BOXES DETAIL FOR AV EQUIPMENT

NTS

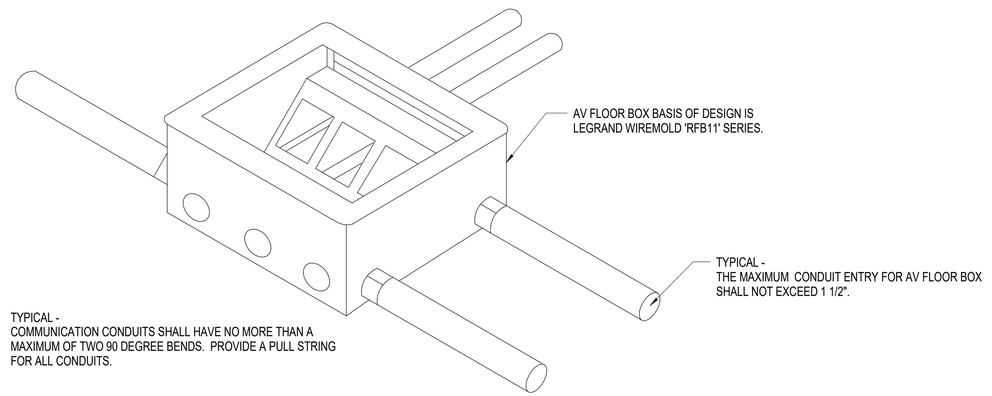

C3 A/V FLOOR BOX DETAIL

NTS

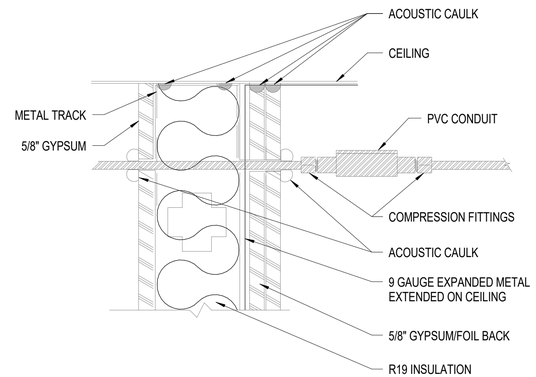

A1 CONDUIT PENETRATION DIELECTRIC BREAK DETAIL

NTS

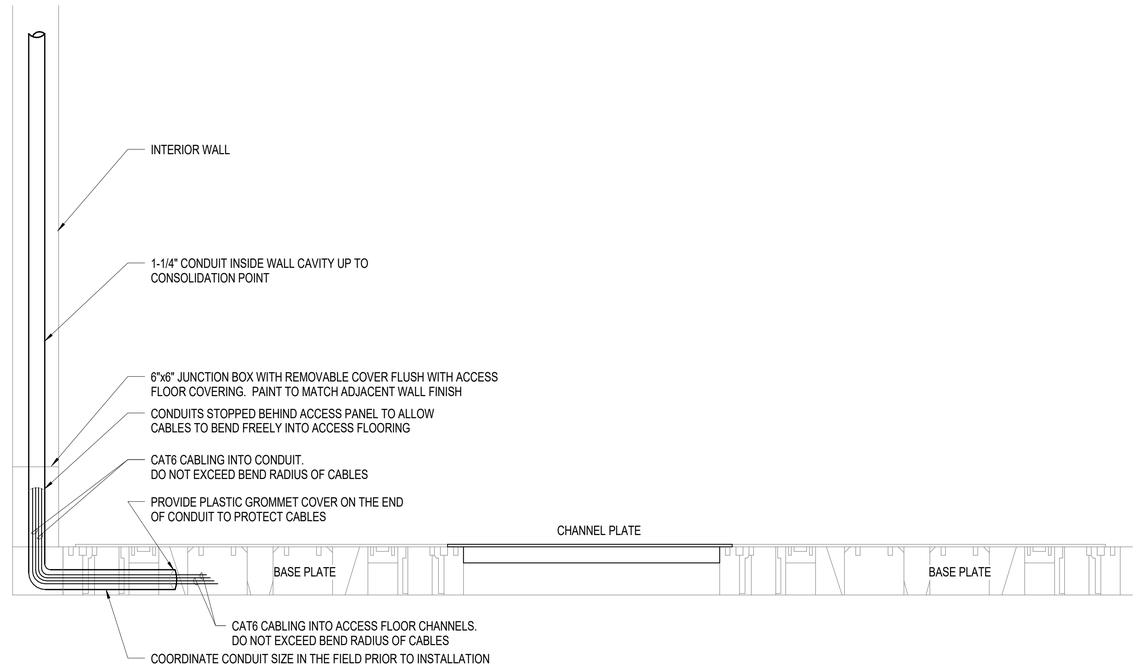

A3 WALL TO ACCESS FLOORING TRANSITION DETAIL

NTS

SYM	DESCRIPTION	DATE	APPR

NAVFAC

NORTH CAROLINA PROFESSIONAL SEAL 037183 ENGINEER EDWARD CHINNIS, JR. 6/25/2020 SEAL

HDR
440 S. CHURCH STREET, SUITE 1000
CHARLOTTE, NC 28202
TEL (704)338-6700
A/E INFO

APPROVED
FOR COMMANDER NAVFAC 7/10/2020

ACTIVITY
Approved by Emily Sylvester, Director of Installation Development Division

SATISFACTORY TO DATE 06/19/2020
DES EC DRW DJF CHK JAZ
PM/DM SGL/RMS
BRANCH MANAGER JAS
CHIEF ENG/ARCH EJA
FIRE PROTECTION

DEPARTMENT OF THE NAVY
NAVAL FACILITIES ENGINEERING COMMAND
NAVAL FACILITIES ENGINEERING COMMAND ~ MID-ATLANTIC
MIDLANT CI CORE
CAMP LEJEUNE - JACKSONVILLE, NC
MARSOC
JACKSONVILLE, NORTH CAROLINA
P1395 MARINE RAIDER HEADQUARTERS
TELECOMMUNICATIONS DETAILS

SCALE: AS NOTED
EPROJECT NO.: 1603164
CONSTR. CONTR. NO.
NAVFAC DRAWING NO. 12794430
SHEET 211 OF 228
ET504

DRAWFORM REVISION: 17 APRIL 2018

C:\vd\2016\10136813-E-CENTRAL_P-1395 MARINE HQ_jeremy.forrest.rvt
6/25/2020 8:29:46 AM

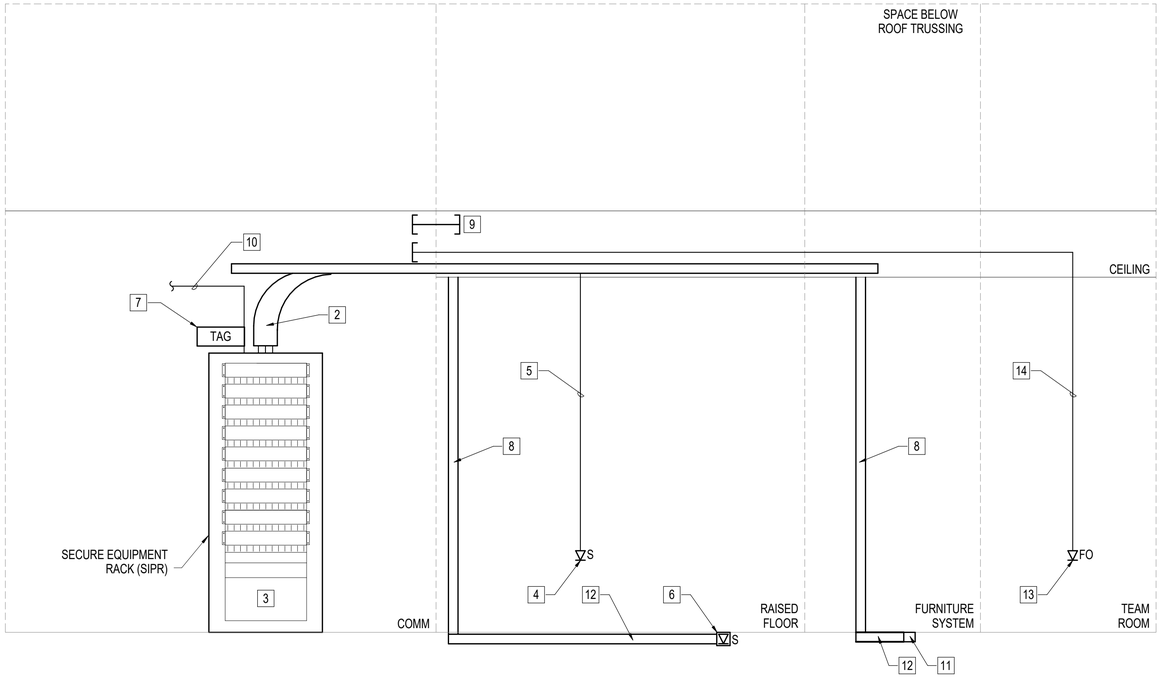

C1 SECURE DATA RISER DIAGRAM

NTS

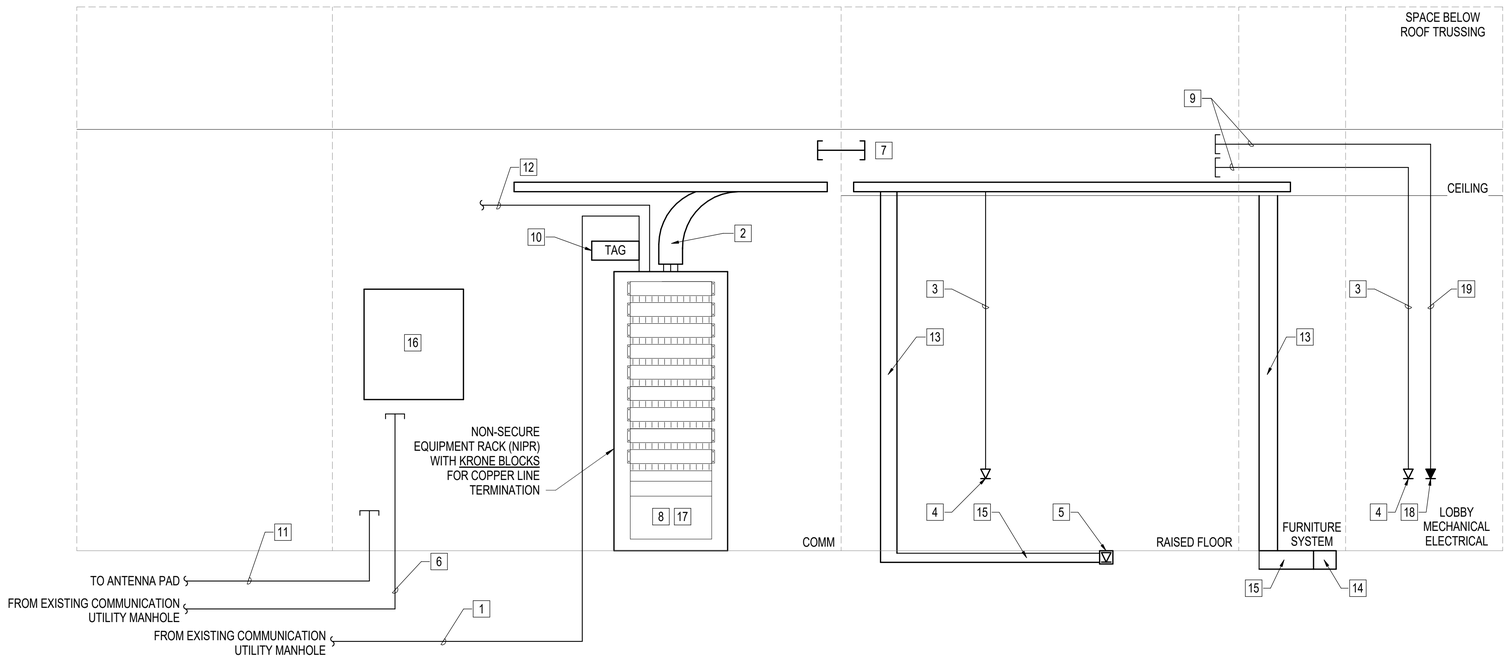

A1 NON-SECURE DATA RISER DIAGRAM

NTS

KEYNOTES - SECURE

1 TYPICAL - BOND ALL TELECOMMUNICATIONS SUPPORTING METALLIC STRUCTURES (CABLE TRAY, CONDUITS, ETC.)

2 PROVIDE WATERFALL FITTING(S) AS REQUIRED.

3 SECURE EQUIPMENT RACK SHOWN IS TYPICAL OF THREE RACKS. SEE COMM ROOM 107 ENLARGED DETAIL FOR ADDITIONAL INFORMATION.

4 SECURE WALL-MOUNTED DATA JACK. SEE FLOOR PLAN FOR QUANTITY AND LOCATIONS.

5 PROVIDE (4) 4 PAIR CATEGORY 6 UNSHIELDED COPPER DROPS. PROVIDE (1) 4 PAIR CABLE TO EACH 8P8C JACK. CABLES SHALL BE CONTINUOUS FROM PATCH PANEL TO JACK WITHOUT SPLICING. REFER TO CABLE COLOR CLASSIFICATION TABLE FOR APPLICABLE COLOR.

6 SECURE FLUSHING FLOOR-MOUNTED DATA JACK. SEE FLOOR PLAN FOR QUANTITY AND LOCATIONS.

7 CABLE TAG.

8 ACCESS PATHWAY FROM ABOVE CEILING TO BELOW FLOOR CONCEALED IN WALL.

9 HIGH VOLUME CABLE PATHWAYS.

10 PROVIDE 12 STRANDS SINGLEMODE FIBER BETWEEN THE SIPR AND NIPR COMMUNICATION RACKS.

11 TWO OR FOUR GANG FLOOR BOX WITH FOUR OR TWELVE PORTS FOR CABLE CONNECTION TO FURNITURE SYSTEM. PROVIDE (1) 4 PAIR CAT6 CABLE TO EACH 8P8C JACK. INSTALLED NEAR FURNITURE SYSTEM IN ACCESS FLOOR SPACE. SEE FLOOR PLANS FOR QUANTITY AND LOCATION.

12 UNDERFLOOR CABLE TRAY.

13 SECURE WALL-MOUNTED DATA JACK WITH DUPLEX SC FIBER OPTIC CONNECTIONS. SEE FLOOR PLAN FOR QUANTITY AND LOCATIONS.

14 PROVIDE TWO STRANDS OF SINGLEMODE FIBER PER DATA JACK. CABLES SHALL CONNECT TO THE EQUIPMENT THAT CONTAINS THE RUN FOR THE SITE MOUNTED FIBER CONNECTORS FOR THE ANTENNA PAD. CABLES SHALL BE CONTINUOUS FROM PATCH PANEL TO JACK WITHOUT SPLICING. REFER TO CABLE COLOR CLASSIFICATION TABLE FOR APPLICABLE COLOR. CABLES TO BE ROUTED IN A 1" CONDUIT. CONDUIT, AND THEIR PENETRATIONS, SHALL MEET THE PDS REQUIREMENTS OUTLINED IN CNSSI NO. 7003.

KEYNOTES - NON-SECURE

1 PROVIDE ONE SET OF 48 STRAND SINGLEMODE FIBER FROM EXISTING UTILITY CONNECTION POINT. ROUTE IN ONE OF FOUR 4" CONDUIT FROM EXISTING COMMUNICATION UTILITY MANHOLE. FIBER TO BE TERMINATED IN OPTICAL FIBER DISTRIBUTION PANELS WITH CONNECTORS IN THE NON-SECURE EQUIPMENT RACKS. PROVIDE 30' OF SLACK COIL WITHIN COMM ROOM.

2 PROVIDE WATERFALL FITTING(S) AS REQUIRED.

3 PROVIDE (4) 4 PAIR CATEGORY 6 UNSHIELDED COPPER DROPS. PROVIDE (1) 4 PAIR CAT6 CABLE TO EACH 8P8C JACK. CABLES SHALL BE CONTINUOUS FROM PATCH PANEL TO JACK WITHOUT SPLICING. REFER TO CABLE COLOR CLASSIFICATION TABLE FOR APPLICABLE COLOR.

4 NON-SECURE WALL-MOUNTED DATA JACK. SEE FLOOR PLAN FOR QUANTITY AND LOCATION.

5 NON-SECURE FLOOR-MOUNTED DATA JACK. SEE FLOOR PLAN FOR QUANTITY AND LOCATION.

6 PROVIDE 100 PAIR OF OSP COPPER CABLES FROM EXISTING UTILITY CONNECTION POINT. ROUTE IN ONE OF THE FOUR 4" CONDUITS. TERMINATE ONE PER PORT AFTER ROUTING THROUGH PET AND RACK MOUNTED KRONE BLOCKS. SEE KEYNOTES 16 AND 17 FOR ADDITIONAL INFORMATION.

7 HIGH VOLUME CABLE PATHWAYS.

8 NON-SECURE EQUIPMENT RACK SHOWN IS TYPICAL OF THREE RACKS. SEE COMM ROOM 107 ENLARGED DETAIL FOR ADDITIONAL INFORMATION.

9 CONDUITS SHALL BE GROUNDED WHERE THEY PENETRATE THE SECURE AREA PERIMETER.

10 CABLE TAG.

11 4" CONDUIT WITH 36 STRANDS OF SINGLE MODE FIBER AND 50 PAIRS OF OSP COPPER CABLES. ROUTE CONDUIT UNDERGROUND TO ANTENNA PAD. SEE SHEET ES101 FOR ADDITIONAL INFORMATION.

12 PROVIDE 12 STRAND SINGLEMODE FIBER BETWEEN THE NIPR AND SIPR COMMUNICATION RACKS.

13 ACCESS PATHWAY FROM ABOVE CEILING TO BELOW FLOOR CONCEALED IN WALL.

14 TWO OR FOUR GANG FLOOR BOX WITH EIGHT OR TWELVE PORTS FOR CABLE CONNECTION TO FURNITURE SYSTEM. PROVIDE (1) 4 PAIR CAT6 CABLE TO EACH 8P8C JACK. INSTALLED NEAR FURNITURE SYSTEM IN ACCESS FLOOR SPACE. SEE FLOOR PLANS FOR QUANTITY AND LOCATION.

15 UNDERFLOOR CABLE TRAY.

16 PROTECTED ENTRANCE TERMINAL (PET) WITH PROTECTION MODULES FOR INCOMING OSP COPPER LINES. MOUNT +54" AFF. PROVIDE 710 INPUT AND 66 OUTPUT INTERCONNECTING HARDWARES FOR CONNECTION TO 100 PAIR COPPER OUTSIDE PLANT (OSP) RATED CABLES.

17 PROVIDE RACK MOUNTED KRONE BLOCKS WITHIN NIPR RACK #2 FOR TERMINATION OF COPPER LINES.

18 NON-SECURE VOICE (POTS) OUTLET. SEE FLOOR PLAN FOR QUANTITY AND LOCATION.

19 PROVIDE (1) 4 PAIR CATEGORY 6 UNSHIELDED COPPER DROP. CABLE SHALL BE CONTINUOUS FROM PATCH PANEL TO JACK WITHOUT SPLICING. REFER TO CABLE COLOR CLASSIFICATION TABLE FOR APPLICABLE COLOR.

SYM	DESCRIPTION	DATE	APPR

NAVFAC

NORTH CAROLINA PROFESSIONAL SEAL 037183 ENGINEER EDWARD CHINNIS, JR. 6/25/2020

HDR
440 S. CHURCH STREET, SUITE 1000
CHARLOTTE, NC 28202
TEL (704)338-6700
A/E INFO

APPROVED
FOR COMMANDER NAVFAC 7/01/2020
ACTIVITY
Approved by Emily Sylvester, Director of Installation Development Division
SATISFACTORY TO DATE 06/19/2020
DES EC | DRW DJF | CHK JAZ
PM/DM SGI/RMS
BRANCH MANAGER JAS
CHIEF ENG/ARCH EJA
FIRE PROTECTION

DEPARTMENT OF THE NAVY
NAVAL FACILITIES ENGINEERING COMMAND – MID-ATLANTIC
MIDLANT CI CORE
MARSOC
NAVAL FACILITIES ENGINEERING COMMAND
CAMP LEJEUNE - JACKSONVILLE, NC
JACKSONVILLE, NORTH CAROLINA
P1395 MARINE RAIDER HEADQUARTERS
TELECOMMUNICATIONS RISER DIAGRAMS

SCALE: AS NOTED
EPROJECT NO.: 1603164
CONSTR. CONTR. NO.
NAVFAC DRAWING NO.
12794431
SHEET 212 OF 228
ET601
DRAWFORM REVISION: 17 APRIL 2018

C:\e420181019\36413-E-CENTRAL_P-1395 MARINE HQ_jeremy.forrest.rvt
6/26/2020 8:29:47 AM

TELECOMMUNICATION BACKBOX SCHEDULE

Room Number	Room Name	NIPRNET BACKBOX	SIPRNET BACKBOX	POTS BACKBOX	A/V BACKBOX	TV BACKBOX
		1	0	1	0	0
-	OUTSIDE DOOR	0	0	2	0	0
103	SECURITY	1	1	0	0	0
104	SECURITY BUNK	1	0	0	0	0
106	TRASH/MANT.	2	1	0	0	0
107	COMM	0	0	1	0	0
108	ELECTRICAL	0	0	1	0	0
109	MECHANICAL SPACE	0	0	1	0	0
110	FIRE ALARM ROOM	1	0	2	0	0
200	RECEPTION	1	0	0	0	0
201	CONFERENCE ROOM	10	10	0	5	3
202	CONFERENCE ROOM	9	11	0	5	3
203	BREAKROOM	2	1	0	0	0
204	TEAM ROOM	5	4	0	1	1
205	OFFICE 8	3	3	0	1	1
206	PRINTER	2	2	0	0	0
207	CO OFFICE	3	3	0	1	1
208	OFFICE 7	3	3	0	1	1
209	OFFICE 6	3	3	0	1	1
210	OFFICE 5	3	3	0	1	1
211	OFFICE 4	3	3	0	1	1
212	OFFICE 3	3	3	0	1	1
213	OFFICE 2	3	3	0	1	1
214	OFFICE 1	3	3	0	1	1
215	GREEN OPS AREA	23	21	0	3	9
301	CONFERENCE ROOM	11	11	0	5	4
302	OFFICE 5	3	3	0	1	1
303	OFFICE 4	3	3	0	1	1
304	OFFICE 3	3	3	0	1	1
305	OFFICE 2	3	3	0	1	1
306	OFFICE 1	3	3	0	1	1
307	CO OFFICE	3	3	0	1	1
308	OFFICE 6	3	3	0	1	1
309	TEAM ROOM	2	2	0	0	1
310	PURPLE OPS AREA	13	11	0	2	4
311	BREAKROOM	2	1	0	0	0
400	JTAC	4	4	0	0	0
402	JTAC CONTROL ROOM	0	4	0	0	0
501	OFFICE 11	3	3	0	1	1
502	OFFICE 10	3	3	0	1	1
503	CONFERENCE ROOM	10	9	0	5	4
504	OFFICE 9	3	3	0	1	1
505	OFFICE 8	0	6	0	1	1
506	OFFICE 7	3	3	0	1	1
507	OFFICE 6	3	3	0	1	1
508	OFFICE 5	3	3	0	1	1
509	OFFICE 4	3	3	0	1	1
510	OFFICE 3	3	3	0	1	1
511	OFFICE 2	3	3	0	1	1
512	SHARED OFFICE	4	4	0	1	1
514	OPEN OFFICE	0	0	0	0	6
515	BLUE OPS AREA	12	10	0	2	3
518	PRINTER	2	2	0	0	0
700	COVERED AREA	0	0	1	0	0
		193	190	9	55	65

APPR | DATE | SYM | DESCRIPTION

NAVFAC

NORTH CAROLINA PROFESSIONAL SEAL 037183 ENGINEER EDWARD CHINNIS, JR.
6/25/2020
SEAL

HDR
440 S. CHURCH STREET, SUITE 1000
CHARLOTTE, NC 28202
TEL (704)338-6700
A/E INFO

APPROVED
FOR COMMANDER NAVFAC 7/10/2020
ACTIVITY
Approved by Emily Sylvester, Director of Installation Development Division
SATISFACTORY TO DATE 06/19/2020
DES EC | DRW DJF | CHK JAZ
PM/OM SGL/RMS
BRANCH MANAGER JAS
CHIEF ENG/ARCH EJA
FIRE PROTECTION

DEPARTMENT OF THE NAVY
NAVAL FACILITIES ENGINEERING COMMAND
MIDLANT CI CORE
NAVAL FACILITIES ENGINEERING COMMAND – MID-ATLANTIC
CAMP LEJEUNE - JACKSONVILLE, NC
MARSOC
JACKSONVILLE, NORTH CAROLINA
P1395 MARINE RAIDER HEADQUARTERS
NETWORK CONNECTIONS SCHEDULE

SCALE: AS NOTED
EPROJECT NO.: 1603164
CONSTR. CONTR. NO.
NAVFAC DRAWING NO.
12794432
SHEET 213 OF 228
ET602
DRAWFORM REVISION: 17 APRIL 2018

C:\v62016\10136813.E-CENTRAL_P-1395 MARINE HQ_jeremy.fornest.rvt
6/25/2020 8:29:50 AM

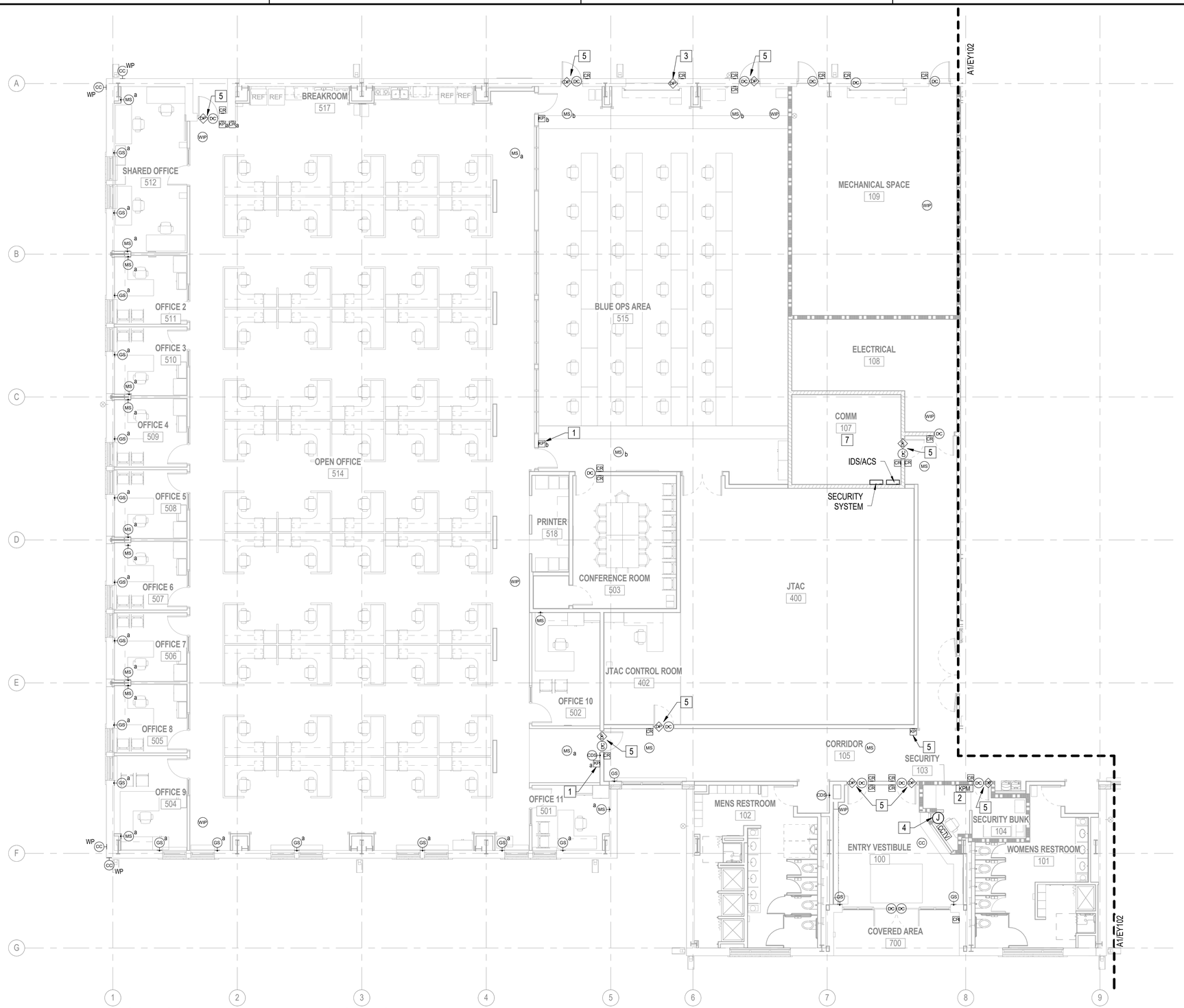

A1 FIRST FLOOR PLAN - AUXILIARY SYSTEMS - AREA A

1/8" = 1'-0"

0 4' 8' 16'

GENERAL NOTES

1. CARD READER/PIM PADS TO BE TAMPER-PROTECTED AND SECURELY FASTENED TO THE WALL.
2. REFER TO "DOOR CONNECTION DETAIL - ACCESS CONTROL" AND "OVERHEAD DOOR ACCESS CONTROL DETAIL" FOR ADDITIONAL INFORMATION.
3. CCTV TO BE MOUNTED NO HIGHER THAN 12' AFG.

AUXILIARY SYSTEMS KEYNOTES

1 TYPICAL - KEYPAD WITH SUBSCRIPT TO BE USED TO ARM/DISARM MOTION AND GLASS BREAK SENSING DEVICES WITH SIMILAR SUBSCRIPTS.

2 KEYPAD OF THE IDS/ACS CONTROL UNIT SHALL BE USED TO MONITOR AND ARM/DISARM ALL MOTION AND GLASS BREAK SENSING DEVICES WITHIN THE FACILITY.

3 DOOR POSTION SWITCH BASIS OF DESIGN BE MAGNASPHERE L2 WITH ROLL UP DOOR MOUNTING BRACKET.

4 BACKBOX FOR DURESS BUTTON TO BE LOCATED UNDER SECURITY DESK. ROUTE EMPTY CONDUIT TO HEADEND EQUIPMENT WHICH CONTROL THE DOORS FROM ENTRY VESTIBULE 100, INTO CORRIDOR 105.

5 FOR NOTED DOOR THE BASIS FOR EACH DEVICE TO BE AS FOLLOWED: ELECTRICAL STRIKE (HES 7000 W/LBM), DOOR POSTION SWITCH (SENTROL 2757) AND CARD READER (S853).

6 BACKBOX FOR SHARED IDS KEYPAD. PROVIDE AND INSTALL 2"x4" JUNCTION BOX. STUB-OUT 1"C TO UNCLASSIFIED CABLE TRAY ABOVE.

7 WALL MOUNTED SECURITY SYSTEM WITH LOCKABLE ENCLOSURE.

KEY PLAN

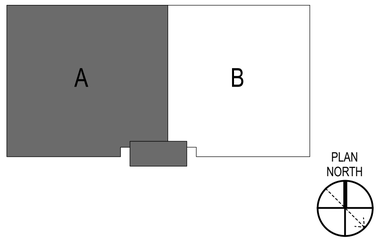

SYM	DESCRIPTION	DATE	APPR

NAVFAC

NORTH CAROLINA PROFESSIONAL SEAL 037183 ENGINEER EDWARD CHINNIS, JR.
6/25/2020
SEAL

HDR
440 S. CHURCH STREET, SUITE 1000
CHARLOTTE, NC 28202
TEL (704)338-6700
A/E INFO

APPROVED
FOR COMMANDER NAVFAC 7/10/2020

ACTIVITY
Approved by Emily Sylvester, Director of Installation Development Division

SATISFACTORY TO DATE 06/19/2020
DES EC DRW DJF CHK JAZ
PM/DM SGL/RMS
BRANCH MANAGER JAS
CHIEF ENG/ARCH EJA
FIRE PROTECTION

DEPARTMENT OF THE NAVY
NAVAL FACILITIES ENGINEERING COMMAND
NAVAL FACILITIES ENGINEERING COMMAND ~ MID-ATLANTIC
MIDLANT CI CORE
CAMP LEJEUNE - JACKSONVILLE, NC
MARSOC
JACKSONVILLE, NORTH CAROLINA
P1395 MARINE RAIDER HEADQUARTERS
FIRST FLOOR PLAN - AUXILIARY SYSTEMS - AREA A

SCALE: AS NOTED
EPROJECT NO.: 1603164
CONSTR. CONTR. NO.
NAVFAC DRAWING NO. 12794433
SHEET 214 OF 228
EY101

DRAWFORM REVISION: 17 APRIL 2018

C:\xvt\2016\10136813-E-CENTRAL_P-1395 MARINE HQ_jeremy.forrest.rvt
6/25/2020 8:29:54 AM



A1 FIRST FLOOR PLAN - AUXILIARY SYSTEMS - AREA B

1/8" = 1'-0"

0 4' 8' 16'

GENERAL NOTES

1. CARD READER/PIM PADS TO BE TAMPER-PROTECTED AND SECURELY FASTENED TO THE WALL.
2. REFER TO "DOOR CONNECTION DETAIL - ACCESS CONTROL" AND "OVERHEAD DOOR ACCESS CONTROL DETAIL" FOR ADDITIONAL INFORMATION.
3. DOOR SWITCHES FOR OVERHEAD DOORS TO INDICATE WHEN DOORS ARE NOT FULLY CLOSED.
4. CCTV TO BE MOUNTED NO HIGHER THAN 12' AFG.

AUXILIARY SYSTEMS KEYNOTES

1 TYPICAL - KEYPAD WITH SUBSCRIPT TO BE USED TO ARM/DISARM MOTION AND GLASS BREAK SENSING DEVICES WITH SIMILAR SUBSCRIPTS.

2 DOOR POSITION SWITCH BASIS OF DESIGN TO BE MAGNASHPERE L2 WITH ROLL UP DOOR MOUNTING BRACKET.

3 FOR NOTED DOOR THE BASIS FOR EACH DEVICE TO BE AS FOLLOWED: ELECTRICAL STRIKE (HES 7000 W/LBM), DOOR POSTION SWITCH (SENTROL 2757) AND CARD READER (S853).

KEY PLAN

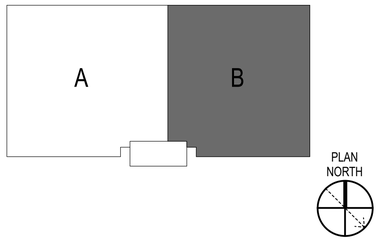

SYM	DESCRIPTION	DATE	APPR

NAVFAC

NORTH CAROLINA PROFESSIONAL SEAL 037183 ENGINEER EDWARD CHINNIS, JR.
6/25/2020
SEAL

HDR
440 S. CHURCH STREET, SUITE 1000
CHARLOTTE, NC 28202
TEL (704)338-6700
A/E INFO

APPROVED
Emily Sylvester, P.E.
FOR COMMANDER NAVFAC 7/10/2020
ACTIVITY
Approved by Emily Sylvester, Director of Installation Development Division
SATISFACTORY TO DATE 06/19/2020
DES EC DRW DJF CHK JAZ
PM/DM SGL/RMS
BRANCH MANAGER JAS
CHIEF ENG/ARCH EJA
FIRE PROTECTION

DEPARTMENT OF THE NAVY
NAVAL FACILITIES ENGINEERING COMMAND
NAVAL FACILITIES ENGINEERING COMMAND ~ MID-ATLANTIC
MIDLANT CI CORE
CAMP LEJEUNE - JACKSONVILLE, NC
MARSOC
JACKSONVILLE, NORTH CAROLINA
P1395 MARINE RAIDER HEADQUARTERS
FIRST FLOOR PLAN - AUXILIARY SYSTEMS - AREA B

SCALE: AS NOTED
EPROJECT NO.: 1603164
CONSTR. CONTR. NO.
NAVFAC DRAWING NO. 12794434
SHEET 215 OF 228
EY102

DRAWFORM REVISION: 17 APRIL 2018

C:\rvt\2016\10136813-E-CENTRAL_P-1395 MARINE HQ_jeremy.forrest.rvt
6/25/2020 8:29:58 AM

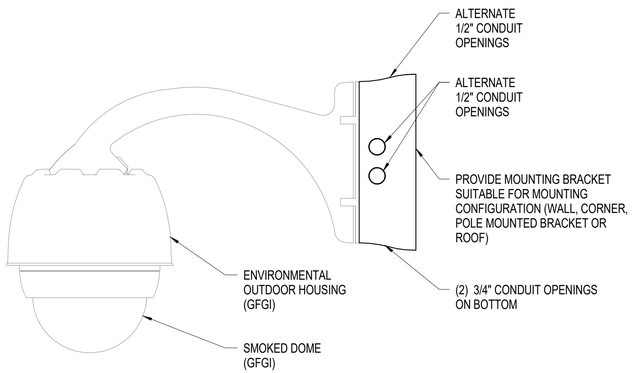

C1 WALL MOUNTED EXTERIOR DOME DETAIL

NTS

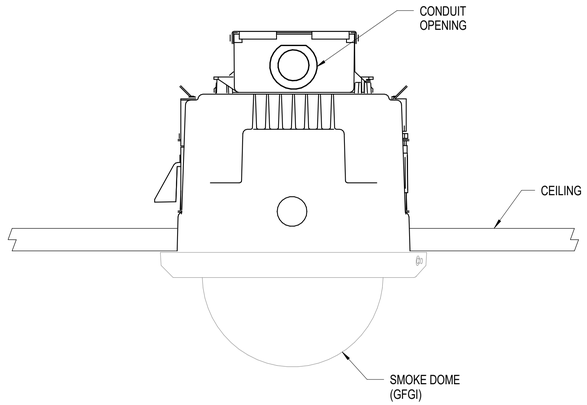

C2 CEILING MOUNTED INTERIOR DOME DETAIL

NTS

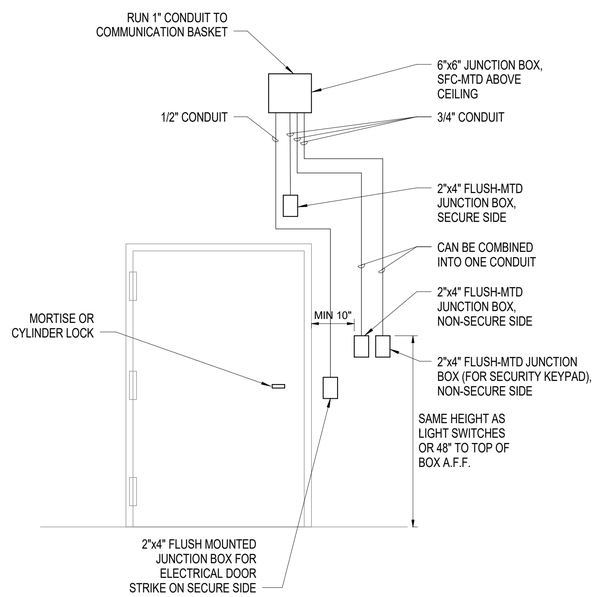

C4 TYPICAL SECURITY SINGLE-DOOR ROUGH-IN DETAIL

NTS

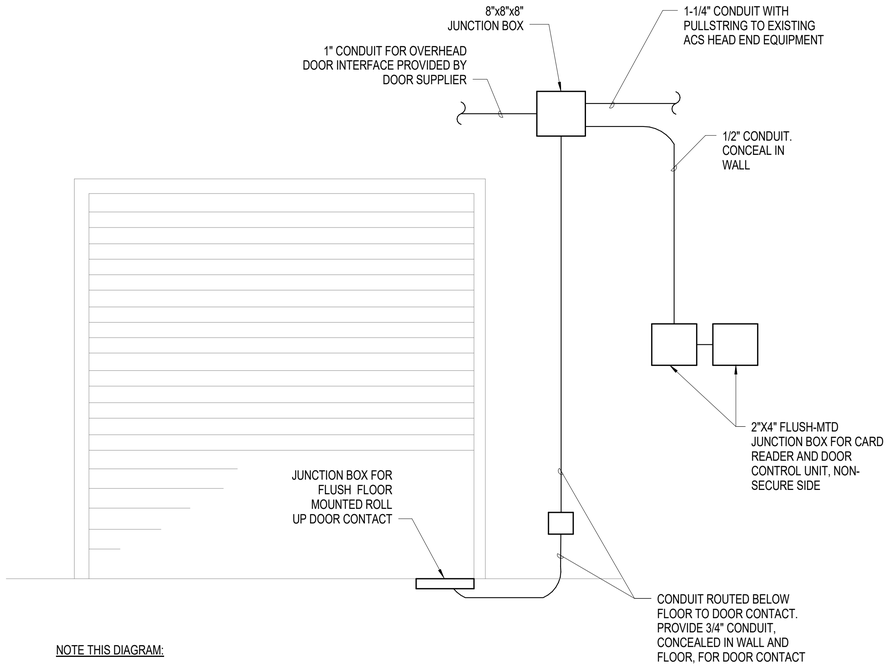

NOTE THIS DIAGRAM:

1. COORDINATE ALL JUNCTION BOX SIZES WITH EQUIPMENT SUPPLIER PRIOR TO INSTALLATION.
2. THIS DIAGRAM IS TYPICAL OF ITEMS REQUIRED AT SECURE ROLL-UP DOORS THROUGHOUT THE FACILITY. SEE DRAWINGS FOR ANY ADDITIONAL REQUIREMENTS.
3. CONTRACTOR SHALL PROVIDE ALL JUNCTION BOXES AND CONDUITS TO PROVIDE A COMPLETE RACEWAY SYSTEM FOR SECURITY INSTALLATION.
4. CONTRACTOR SHALL PROVIDE A PULL STRING IN EACH CONDUIT.

A1 ROLL-UP DOOR ROUGH-IN DETAIL - ACCESS CONTROL

NTS

SYM	DESCRIPTION	DATE	APPR

NAVFAC

NORTH CAROLINA PROFESSIONAL SEAL 037183 ENGINEER EDWARD CHINNIS, JR. 6/25/2020 SEAL

HDR
440 S. CHURCH STREET, SUITE 1000
CHARLOTTE, NC 28202
TEL (704)338-6700
A/E INFO

APPROVED
FOR COMMANDER NAVFAC 7/10/2020

ACTIVITY
Approved by Emily Sylvester, Director of Installation Development Division

SATISFACTORY TO DATE 06/19/2020
DES EC DRW DJF CHK JAZ
PM/DM SGL/RMS
BRANCH MANAGER JAS
CHIEF ENG/ARCH EJA
FIRE PROTECTION

DEPARTMENT OF THE NAVY
NAVAL FACILITIES ENGINEERING COMMAND
NAVAL FACILITIES ENGINEERING COMMAND ~ MID-ATLANTIC
MIDLANT CI CORE
CAMP LEJEUNE - JACKSONVILLE, NC
MARSOC
JACKSONVILLE, NORTH CAROLINA
P1395 MARINE RAIDER HEADQUARTERS
AUXILIARY SYSTEMS DETAILS

SCALE: AS NOTED
EPROJECT NO.: 1603164
CONSTR. CONTR. NO.
NAVFAC DRAWING NO. 12794435
SHEET 216 OF 228
EY501

DRAWFORM REVISION: 17 APRIL 2018

C:\rvt\2016\10136813-E-CENTRAL_P-1395 MARINE HQ_jeremy.forrest.rvt
6/25/2020 8:29:59 AM

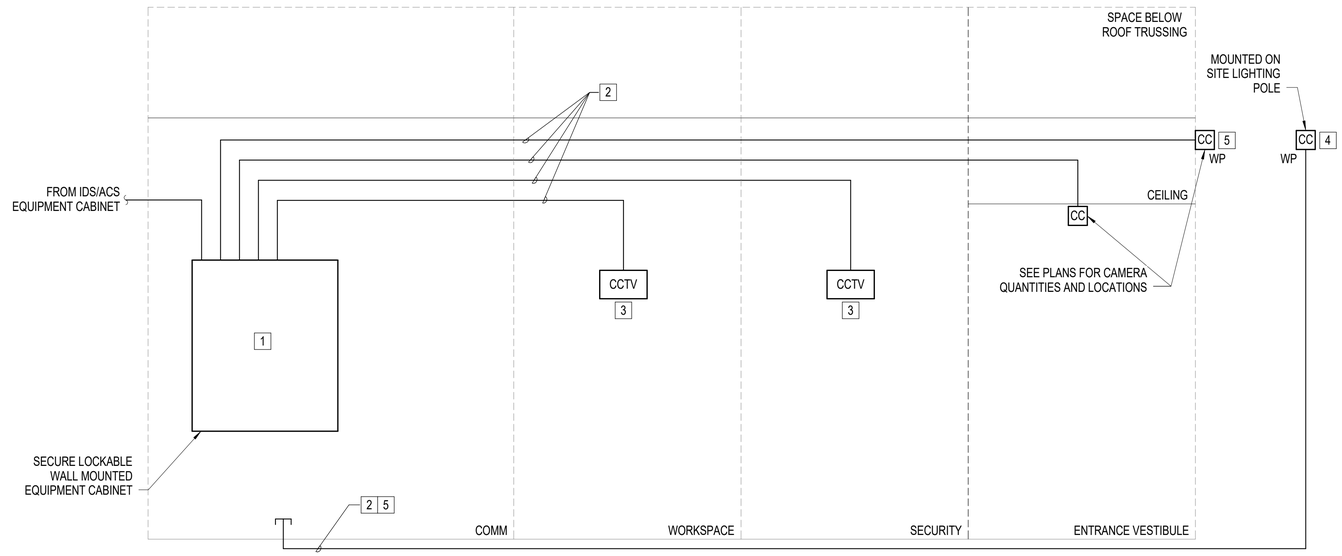

C1 CCTV SYSTEM RISER DIAGRAM

NTS

KEYNOTES - CCTV

1. CCTV SYSTEM TO BE GOVERNMENT FURNISHED GOVERNMENT INSTALLED. PROVIDE SYSTEM INFRASTRUCTURE SUCH AS RACEWAY, JUNCTIONS BOXES, PULLSTRINGS, ETC.
2. PROVIDE 1" CONDUIT WITH PULLSTRING FROM CCTV CAMERA TO HEADEND LOCATION AS SHOWN.
3. VIDEO OUTPUT FROM CAMERAS SHALL BE DISPLAYED ON MONITORS.
4. EXTERIOR SITE POLE CAMERAS TO BE PROVIDED WITH A DEDICATED 120V CIRCUIT FOR ENVIRONMENTAL HOUSING POWER.
5. SEAL PENETRATION AND SLOPE CONDUIT DOWNWARD TOWARDS BUILDING EXTERIOR.

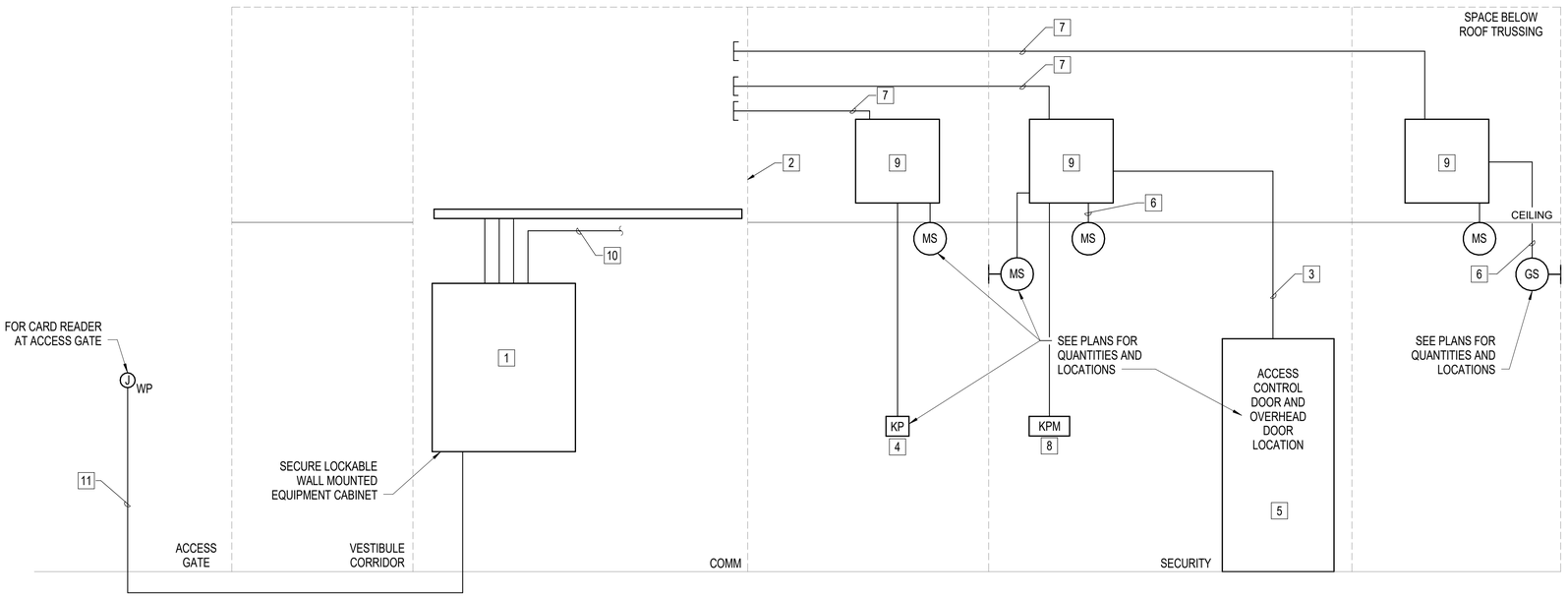

A1 INTRUSION DETECTION/ACCESS CONTROL SYSTEM RISER DIAGRAM

NTS

KEYNOTES - IDS/ACS

1. INTRUSION DETECTION/ACCESS CONTROL (IDS/ACS) SYSTEM TO BE GOVERNMENT FURNISHED GOVERNMENT INSTALLED. PROVIDE SYSTEM INFRASTRUCTURE SUCH AS RACEWAY, JUNCTION BOXES, PULLSTRINGS, ETC.
2. PROVIDE DIELECTRIC BREAKS AND/OR GROUNDING ON ALL CONDUIT PENETRATING THE FACILITY BOUNDARY.
3. PROVIDE (2) 1" CONDUITS WITH PULLSTRING FROM DOOR LOCATION TO LOCAL ZONE CONTROL PANEL. ROUTE ABOVE CORRIDOR CEILING.
4. PROVIDE A LOCAL IDS ARM/DISARM KEYPAD AS INDICATED ON THE PLANS.
5. SEE DOOR CONNECTION AND OVERHEAD DOOR DETAIL FOR ACS REQUIREMENTS.
6. PROVIDE 1" CONDUIT WITH PULLSTRING FROM EACH DETECTOR/SENSOR TO LOCAL ZONE CONTROL PANEL. ROUTE ABOVE CORRIDOR CEILING.
7. PROVIDE (2) 1" CONDUITS WITH PULLSTRING FROM LOCAL ZONE CONTROL PANEL TO COMM ROOM. ROUTE ABOVE CORRIDOR CEILING.
8. PROVIDE MONITORING AND MASTER OVERRIDE CAPABILITIES FOR THE IDS/ACS SYSTEMS IN SECURITY ROOM.
9. 30"x24"x8" DEEP, LOCAL ZONE CONTROLLER. PROVIDE 120V POWER FOR EACH CABINET.
10. PROVIDE ONE 1" CONDUIT WITH PULLSTRING FROM IDS/ACS EQUIPMENT CABINET TO CCTV EQUIPMENT CABINET.
11. PROVIDE 1" CONDUIT AND WEATHERPROOF JUNCTION BOX FOR EACH INTERCOM/CARD READER STATION AT EXTERIOR ACCESS GATE.

SYM	DESCRIPTION	DATE	APPR

NAVFAC

NORTH CAROLINA PROFESSIONAL SEAL 037183 ENGINEER EDWARD CHINNIS, JR.
6/25/2020

HDR
440 S. CHURCH STREET, SUITE 1000
CHARLOTTE, NC 28202
TEL (704)338-6700

A/E INFO

APPROVED
FOR COMMANDER NAVFAC 7/10/2020

ACTIVITY
Approved by Emily Sylvester, Director of Installation Development Division

SATISFACTORY TO	DATE	06/19/2020	
DES	EC	DRW	DJF	CHK	JAZ
PM/DM	SGL/RMS		
BRANCH MANAGER	JAS		
CHIEF ENG/ARCH	EJA		
FIRE PROTECTION			

DEPARTMENT OF THE NAVY
NAVAL FACILITIES ENGINEERING COMMAND
MIDLANT CI CORE
MARSOC

NAVAL FACILITIES ENGINEERING COMMAND ~ MID-ATLANTIC
CAMP LEJEUNE · JACKSONVILLE, NC

JACKSONVILLE, NORTH CAROLINA

P1395 MARINE RAIDER HEADQUARTERS

AUXILIARY SYSTEMS RISER DIAGRAMS

SCALE	AS NOTED
EPROJECT NO.	1603164
CONSTR. CONTR. NO.	
NAVFAC DRAWING NO.	12794436
SHEET	217 OF 228

EY601

DRAWFORM REVISION: 17 APRIL 2018

C:\rvt\2016\01\3683\3-E-CENTRAL_P-1395 MARINE HQ_jeremy.forrest.rvt
6/25/2020 8:30:00 AM

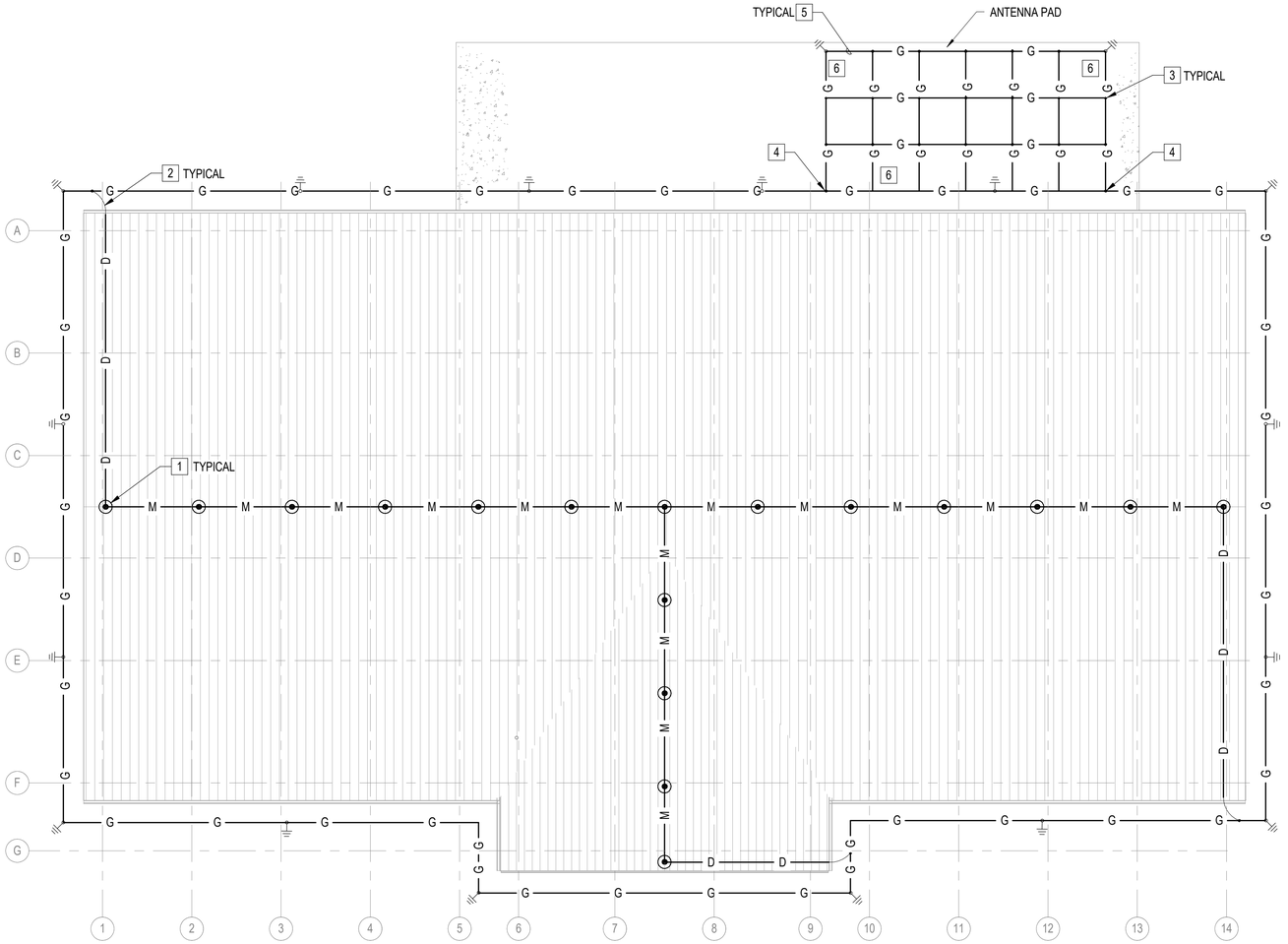

A1 ROOF LIGHTNING PROTECTION PLAN

1/16" = 1'-0"

0 8' 16' 32'

GENERAL NOTES

1. LAYOUT OF SYSTEM COMPONENTS IS PROVIDED FOR COORDINATION PURPOSES. THE COMPLETED INSTALLATION SHALL MEET THE "INSTALLATION REQUIREMENTS FOR LIGHTNING PROTECTION SYSTEMS, NFPA 780". A MASTER LABEL SHALL BE FURNISHED TO THE OWNER UPON COMPLETION.
2. AIR TERMINAL BASES AND CONDUCTOR CLAMPS ATTACHED TO THE ROOF SHALL BE ADHESIVE MOUNTED TYPE TO AVOID ROOF PENETRATIONS.
3. ROOF PADS, PAVERS, FLASHINGS OR ANY OTHER SPECIAL ROOFING MATERIALS REQUIRED FOR INSTALLATION OF THE LIGHTNING PROTECTION SYSTEM SHALL BE FURNISHED AND INSTALLED BY THE CONTRACTOR.
4. WIRE FOR ROOF LOOP SHALL BE ALUMINUM AND DOWNCOMERS SHALL BE COPPER.
5. THE LIGHTNING PROTECTION SYSTEM SHALL BE BONDED TO THE BUILDING GROUND SYSTEM PER NFPA 70, ARTICLE 250.106 AND NFPA 780.

LIGHTNING PROTECTION KEYNOTES

1 ALL AIR TERMINALS LOCATED AT CABLE ENDS AND ALONG EAVES SHALL BE INSTALLED WITHIN 2'-0" OF ROOF EDGE.

2 REFER TO DETAIL C1 ON SHEET EP502 FOR TYPICAL INSTALLATION OF DOWN CONDUCTORS.

3 GROUNDING ANCHOR BOLT. REFER TO SPECIFICATION 33 71 01.

4 BOND ANTENNA PAD GROUND SYSTEM TO BUILDING LIGHTNING PROTECTION SYSTEM.

5 #1/0 BONDING CABLE BETWEEN ANCHORS AND BUILDING.

6 GROUND PAD MOUNTED CABINET WITH #1/0 BONDING CABLE TO LIGHTNING PROTECTION GROUNDING SYSTEM. REFER TO SHEET ES101 FOR LOCATION OF PAD MOUNTED CABINET.

KEY PLAN

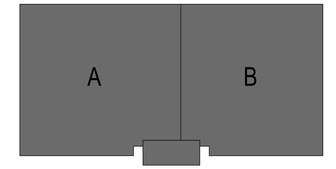

PLAN NORTH

SYM	DESCRIPTION	DATE	APPR

NAVFAC

NORTH CAROLINA PROFESSIONAL SEAL 037183 ENGINEER EDWARD CHINNIS, JR.
6/25/2020
SEAL

HDR
440 S. CHURCH STREET, SUITE 1000
CHARLOTTE, NC 28202
TEL (704)338-6700
A/E INFO

APPROVED
Jacobs Engineering, P.A.
FOR COMMANDER NAVFAC 7/10/2020
ACTIVITY
Approved by Emily Sylvester, Director of Installation Development Division
SATISFACTORY TO DATE 06/19/2020
DES EC DRW DJF CHK EC
PM/DM SGL/RMS
BRANCH MANAGER JAS
CHIEF ENG/ARCH EJA
FIRE PROTECTION

DEPARTMENT OF THE NAVY
NAVAL FACILITIES ENGINEERING COMMAND
NAVAL FACILITIES ENGINEERING COMMAND ~ MID-ATLANTIC
MIDLANT CI CORE
CAMP LEJEUNE - JACKSONVILLE, NC
MARSOC
JACKSONVILLE, NORTH CAROLINA
P1395 MARINE RAIDER HEADQUARTERS
LIGHTNING PROTECTION PLAN

SCALE: AS NOTED
EPROJECT NO.: 1603164
CONSTR. CONTR. NO.
NAVFAC DRAWING NO. 12794437
SHEET 218 OF 228
EG101
DRAWFORM REVISION: 17 APRIL 2018

C:\rvt\2016\10136813-E-CENTRAL_P-1395 MARINE HQ_jeremy.forrest.rvt
6/25/2020 8:27:40 AM

AUDIOVISUAL PLAN TITLE / DETAIL EXAMPLE



AUDIOVISUAL SIGNAL FLOW DEVICE EXAMPLE

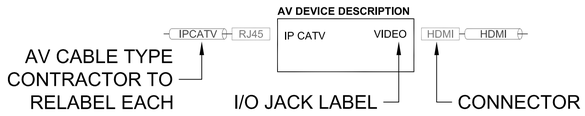

AUDIOVISUAL DRAWING INDEX

		REVISION:	DATE:
TA-000	AV DRAWING INDEX, SYMBOLS AND NOTES		06/22/20
TA-100	OVERALL AV ROOM PLAN		06/22/20
TA-101	AREA A AV FLOOR PLAN		06/22/20
TA-102	AREA B AV FLOOR PLAN		06/22/20
TA-201	AREA A AV REFLECTED CEILING PLAN		06/22/20
TA-202	AREA B AV REFLECTED CEILING PLAN		06/22/20
TA-400	OPS AREAS DISPLAY WALL ELEVATION		06/22/20
TA-500	CONFERENCE ROOM SIGNAL FLOW LINE DIAGRAM		06/22/20
TA-501	OPS AREAS SIGNAL FLOW LINE DIAGRAM		06/22/20
TA-502	OFFICE / OPEN AREAS SIGNAL FLOW LINE DIAGRAMS		06/22/20

ELECTRICAL NOTES

1. AV CABLING IN WALLS OR CEILINGS SHALL BE PLENUM RATED
2. PLEASE REFER TO N.E.C. AND ANY LOCAL ELECTRICAL CODES
3. ELECTRICAL SYMBOLS ARE SHOWN FOR COORDINATION U.O.N.
4. POWER OUTLETS SHOWN ARE FOR AUDIOVISUAL USE U.O.N.
5. ALL AV CIRCUITS AND OUTLETS SHALL BE 120VAC 20 AMP U.O.N.
6. ALL OUTLETS INSTALLED AT STANDARD OUTLET HEIGHT U.O.N.
7. ALL CONDUITS SHALL BE PROVIDED AND INSTALLED BY GC/EC
8. ALL CONDUITS SHALL BE 1.00" DIAMETER OR LARGER U.O.N.
9. ALL CONDUITS SHALL COMPLY WITH ANSI/TIA-569-C 2012
10. ALL CONDUITS SHALL BE RIGID ELECTRICAL METAL TUBING
11. ALL CONDUITS SHALL INCLUDE PULL STRINGS FOR AV CABLING
12. MAX. NUMBER OF BENDS BETWEEN PULL POINTS IS 180 DEG.
13. JUNCTION BOXES SHALL BE PROVIDED EVERY 100' FEET OR LESS
14. PLASTIC BUSHINGS SHALL BE PROVIDED ON ALL CONDUIT STUBS
15. ALL CATV/IPTV CABLING AND PLATES PROVIDED BY GC/EC
16. ALL SPECIFIED TELE/DATA DROPS SHALL CONNECT BACK TO FACILITY NETWORK INFRASTRUCTURE. CABLES PROVIDED BY GC

ABBREVIATIONS

AFF = ABOVE FINISHED FLOOR
ANT = WIRELESS MICROPHONE ANTENNA
AV = AUDIOVISUAL
AVC - AUDIOVISUAL SYSTEMS CONTRACTOR
CAT6A = CATEGORY 6A CABLING
CATV/IPTV = CABLE / IP TELEVISION
IPAV = DIGITAL AUDIO/VIDEO SIGNAL OVER CAT6A CABLE
EC = ELECTRICAL CONTRACTOR
FP = FLAT PANEL VIDEO DISPLAY
FF&E = FURNITURE, FIXTURES, AND EQUIPMENT
GC = GENERAL CONTRACTOR
NIC = NOT IN CONTRACT SCOPE OF WORK
GFGI = GOVERNMENT FURNISHED AND INSTALLED
GFCI = GOVERNMENT FURNISHED, AVC INSTALLED
P = CEILING MOUNTED PROJECTOR
PC = PERSONAL COMPUTER
U.O.N = UNLESS OTHERWISE NOTED

AUDIOVISUAL AND ARCHITECTURAL NOTES

1. WALLPLATE AND PROJECTOR MOUNT FINISHES SHALL BE WHITE
2. ALL FURNITURE FINISHES AND DETAILS SHOULD BE VERIFIED
3. ALL SPECIFIED HEIGHTS ARE TO THE CENTER OF THE DEVICE
4. PROVIDE RUBBER GROMMET PLATE WHEN CABLES ENTER WALL
5. ALL INTERCONNECT CABLES ARE TO BE PROVIDED BY AVC
6. SOURCE COMPUTERS AND COMPUTER PERIPHERALS ARE GFGI
7. ALL AV CABLING AND LABELS SHALL FOLLOW AV-9000 STANDARD

TYPICAL AUDIOVISUAL CABLE SCHEDULE - AVC TO SUBMIT FINAL SCHEDULE/MODELS

MAKE:	MODEL:	USE:
GEPCO	SSU182P	70V SPEAKER - PLENUM
LIBERTY	24-4P-PLCSH	RS-232/422 CONTROL - PLENUM
LIBERTY	24-4P-P-L6ASH	CAT6A - SHIELDED PLENUM
CRESTRON	CRESNET-P-XX	CONTROL PANEL CABLE
CRESTRON	CBL-VGA-AUD-6	VGA & STEREO AUDIO PATCH
CRESTRON	CBL-HD-X	HDMI PATCH

GENERAL NOTES

1. REVIEW ALL DRAWINGS AND SPECIFICATIONS FOR THE COMPLETE SCOPE OF WORK.NOTIFY ARCHITECT IMMEDIATELY FOR CLARIFICATION IF INCONSISTENCIES,CONTRADICTIONS OR OMISSIONS ARE DISCOVERED.DRAWINGS & SPECIFICATIONS ARECOMPLIMENTARY COMPONENTS OF THE CONTRACT DOCUMENTS.
2. DO NOT SCALE DRAWINGS, IF DIMENSIONAL INFORMATION IS REQUIRED & NOT FOUND,NOTIFY ARCHITECT IMMEDIATELY FOR CLARIFICATION. NOT ALL GRID LINES ARECENTER.
3. ALL DIMENSIONS ARE TO COLUMN CENTERLINES OR FACE OF FINISHED WALLS ORSURFACES UNLESS NOTED OTHERWISE.
4. ALL DOOR FRAMES ARE TO BE INSTALLED 4" AWAY OF ADJACENT PERPENDICULARWALLS UNLESS NOTED OTHERWISE.
5. REFER TO LIFE SAFETY DRAWINGS FOR ADDITIONAL FIRE / SMOKE RATINGREQUIREMENTS.
6. REFER TO INTERIOR FINISH DRAWINGS FOR ADDITIONAL INTERIOR FINISH SPECIFICINFORMATION.
7. REFER TO STRUCTURAL DRAWINGS FOR ADDITIONAL STRUCTURAL SPECIFICINFORMATION.
8. REFER TO MEP DRAWINGS FOR ADDITIONAL MEP SPECIFIC INFORMATION.
9. ALL INTERIOR PARTITIONS ARE TYPE "G" UNLESS NOTED OTHERWISE.
10. HIGHER FIRE RATED PARTITIONS TAKE PRECEDENCE OVER LOWER FIRE RATEDPARTITIONS AND ARE TO CONTINUE THROUGH ALL SUCH INTERSECTIONS.
11. OVERALL EXTERIOR DIMENSIONS TAKEN FROM OUTSIDE FACE OF BRICK VENEER ATWALL ABOVE WATER TABLE.
12. COORDINATE ALL REQUIRED CONDUIT, PIPING, AND CHASES FOR ALL GOVERNMENTFURNISHED, GOVERNMENT INSTALLED EQUIPMENT.

LEGEND

DESCRIPTION	SYMBOL	DESCRIPTION	SYMBOL
32-75" FLAT PANEL 2 GANG OUTPUT PLATE	FP	FLOORBOX 4 GANG AV PLATE(S)	FB
2 GANG INPUT PLATE	AV2	TOUCHPANEL	TP
4 GANG IN/OUTPUT PLATE	AV4	2X2 CEILING MICROPHONE	M
CEILING SPEAKER	S	VTC CAMERA MOUNTS TO 2 GANG BOX	VTC
PROJECTOR	P	LOW VOLTAGE CONTROL FOR PROJECTION SCREEN	LVC
3X3 VIDEO WALL DISPLAY 2 GANG OUTPUT PLATE	LED		

SYM	DESCRIPTION	DATE	APPR

NAVFAC

Certified Technology Specialist-Design CTS-D Paul Konikowski #2219317 Expires: 2022/02/28 AVIXA

Command Systems Group
40900 MERCHANTS LN #204
LEONARDSTOWN, MD 20650

A/E INFO

APPROVED
FOR COMMANDER NAVFAC 7/10/2020
ACTIVITY
Approved by Emily Sylvester, Director of Installation Development Division
SATISFACTORY TO DATE 06/19/2020

DES	SM	DRW	PK	CHK	PL

PM/OM SQL/RMS
BRANCH MANAGER JAS
CHIEF ENG/ARCH EJA
FIRE PROTECTION

DEPARTMENT OF THE NAVY
NAVAL FACILITIES ENGINEERING COMMAND
MIDLANT CI CORE
NAVAL FACILITIES ENGINEERING COMMAND – MID-ATLANTIC
CAMP LEJEUNE - JACKSONVILLE, NC
MARSOC
JACKSONVILLE, NORTH CAROLINA
P1395 MARINE RAIDER HEADQUARTERS
AV DRAWING INDEX, SYMBOLS AND NOTES

SCALE: AS NOTED
EPROJECT NO.: 1603164
CONSTR. CONTR. NO.
NAVFAC DRAWING NO. 12794438
SHEET 219 OF 228

TA000

DRAWFORM REVISION: 17 APRIL 2018

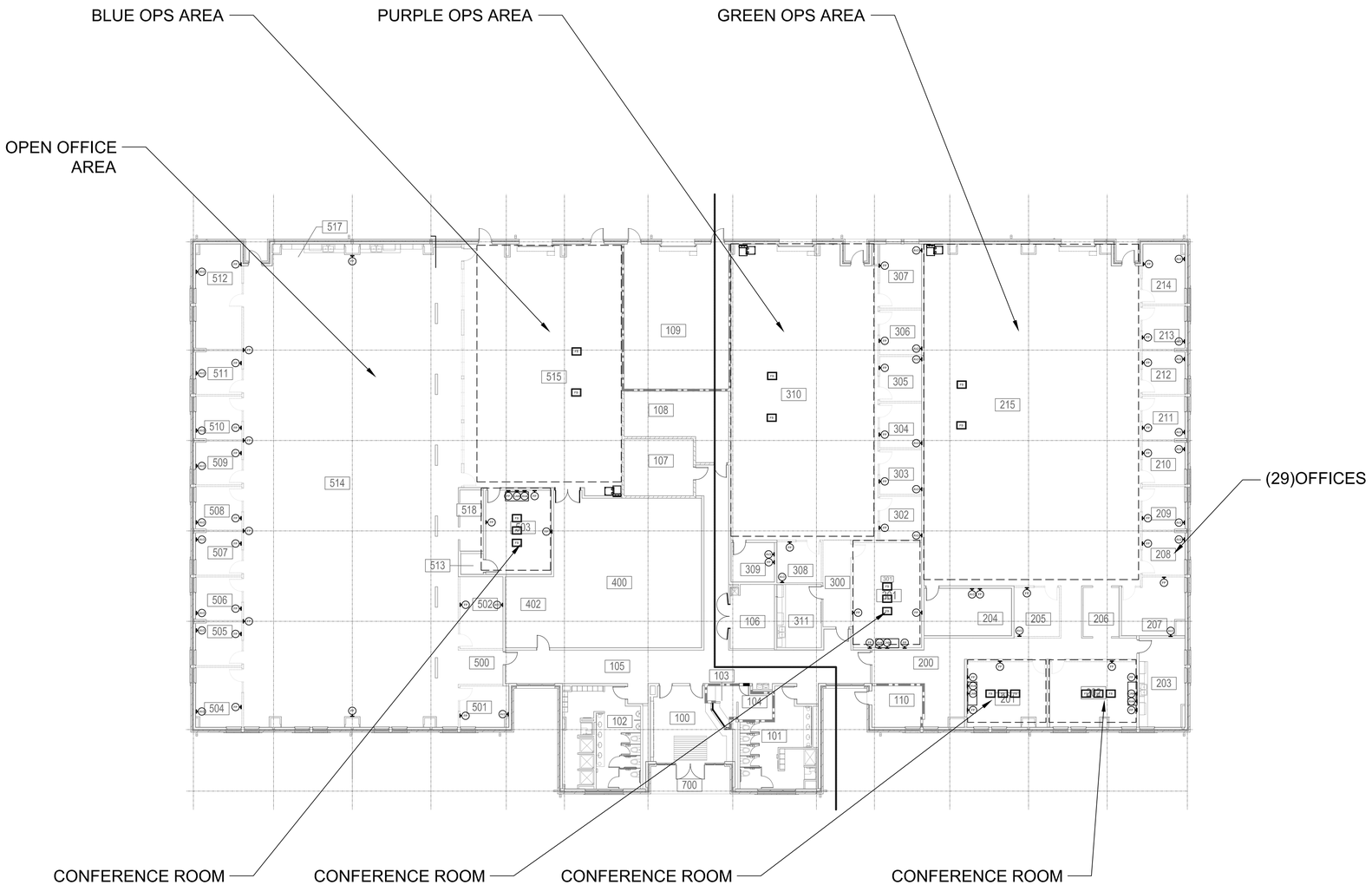

GENERAL NOTES

1. REVIEW ALL DRAWINGS AND SPECIFICATIONS FOR THE COMPLETE SCOPE OF WORK.NOTIFY ARCHITECT IMMEDIATELY FOR CLARIFICATION IF INCONSISTENCIES,CONTRADICTIONS OR OMISSIONS ARE DISCOVERED.DRAWINGS & SPECIFICATIONS ARECOMPLIMENTARY COMPONENTS OF THE CONTRACT DOCUMENTS.
2. DO NOT SCALE DRAWINGS, IF DIMENSIONAL INFORMATION IS REQUIRED & NOT FOUND,NOTIFY ARCHITECT IMMEDIATELY FOR CLARIFICATION. NOT ALL GRID LINES ARECENTER.
3. ALL DIMENSIONS ARE TO COLUMN CENTERLINES OR FACE OF FINISHED WALLS ORSURFACES UNLESS NOTED OTHERWISE.
4. ALL DOOR FRAMES ARE TO BE INSTALLED 4" AWAY OF ADJACENT PERPENDICULARWALLS UNLESS NOTED OTHERWISE.
5. REFER TO LIFE SAFETY DRAWINGS FOR ADDITIONAL FIRE / SMOKE RATINGREQUIREMENTS.
6. REFER TO INTERIOR FINISH DRAWINGS FOR ADDITIONAL INTERIOR FINISH SPECIFICINFORMATION.
7. REFER TO STRUCTURAL DRAWINGS FOR ADDITIONAL STRUCTURAL SPECIFICINFORMATION.
8. REFER TO MEP DRAWINGS FOR ADDITIONAL MEP SPECIFIC INFORMATION.
9. ALL INTERIOR PARTITIONS ARE TYPE "G" UNLESS NOTED OTHERWISE.
10. HIGHER FIRE RATED PARTITIONS TAKE PRECEDENCE OVER LOWER FIRE RATEDPARTITIONS AND ARE TO CONTINUE THROUGH ALL SUCH INTERSECTIONS.
11. OVERALL EXTERIOR DIMENSIONS TAKEN FROM OUTSIDE FACE OF BRICK VENEER ATWALL ABOVE WATER TABLE.
12. COORDINATE ALL REQUIRED CONDUIT, PIPING, AND CHASES FOR ALL GOVERNMENTFURNISHED, GOVERNMENT INSTALLED EQUIPMENT.

LEGEND

DESCRIPTION	SYMBOL	DESCRIPTION	SYMBOL
32-75" FLAT PANEL 2 GANG OUTPUT PLATE	FP	FLOORBOX 4 GANG AV PLATE(S)	FB
2 GANG INPUT PLATE	AV2	TOUCHPANEL	TP
4 GANG IN/OUTPUT PLATE	AV4	2X2 CEILING MICROPHONE	M
CEILING SPEAKER	S	VTC CAMERA MOUNTS TO 2 GANG BOX	VTC
PROJECTOR	P	LOW VOLTAGE CONTROL FOR PROJECTION SCREEN	LVC
3X3 VIDEO WALL DISPLAY 2 GANG OUTPUT PLATE	LED		

KEY PLAN

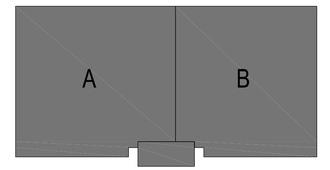

PLAN NORTH

A1 OVERALL AV ROOM PLAN

SCALE: 1/16" = 1'-0" (TA-100)

0' 8' 16' 32'

SYM	DESCRIPTION	DATE	APPR

NAVFAC

CTS-D Certified Technology Specialist-Design
Paul Konikowski
#2219317
Expires:
2022/02/28
SEAL

Command Systems Group
40900 MERCHANTS LN #204
LEONARDSTOWN, MD 20650
A/E INFO

APPROVED
FOR COMMANDER NAVFAC 7/16/2020

ACTIVITY
Approved by Emily Sylvester, Director of Installation Development Division
SATISFACTORY TO DATE 06/19/2020

DES	SM	DRW	PK	CHK	PL

PM/OM SGL/RMS
BRANCH MANAGER JAS
CHIEF ENG/ARCH EJA
FIRE PROTECTION

DEPARTMENT OF THE NAVY
NAVAL FACILITIES ENGINEERING COMMAND
MIDLANT CI CORE
NAVAL FACILITIES ENGINEERING COMMAND ~ MID-ATLANTIC
CAMP LEJEUNE - JACKSONVILLE, NC
MARSOC
JACKSONVILLE, NORTH CAROLINA
P1395 MARINE RAIDER HEADQUARTERS
OVERALL AV FLOOR PLAN

SCALE: AS NOTED
EPROJECT NO.: 1603164
CONSTR. CONTR. NO.
NAVFAC DRAWING NO. 12794439
SHEET 220 OF 228

TA100

DRAWFORM REVISION: 17 APRIL 2018

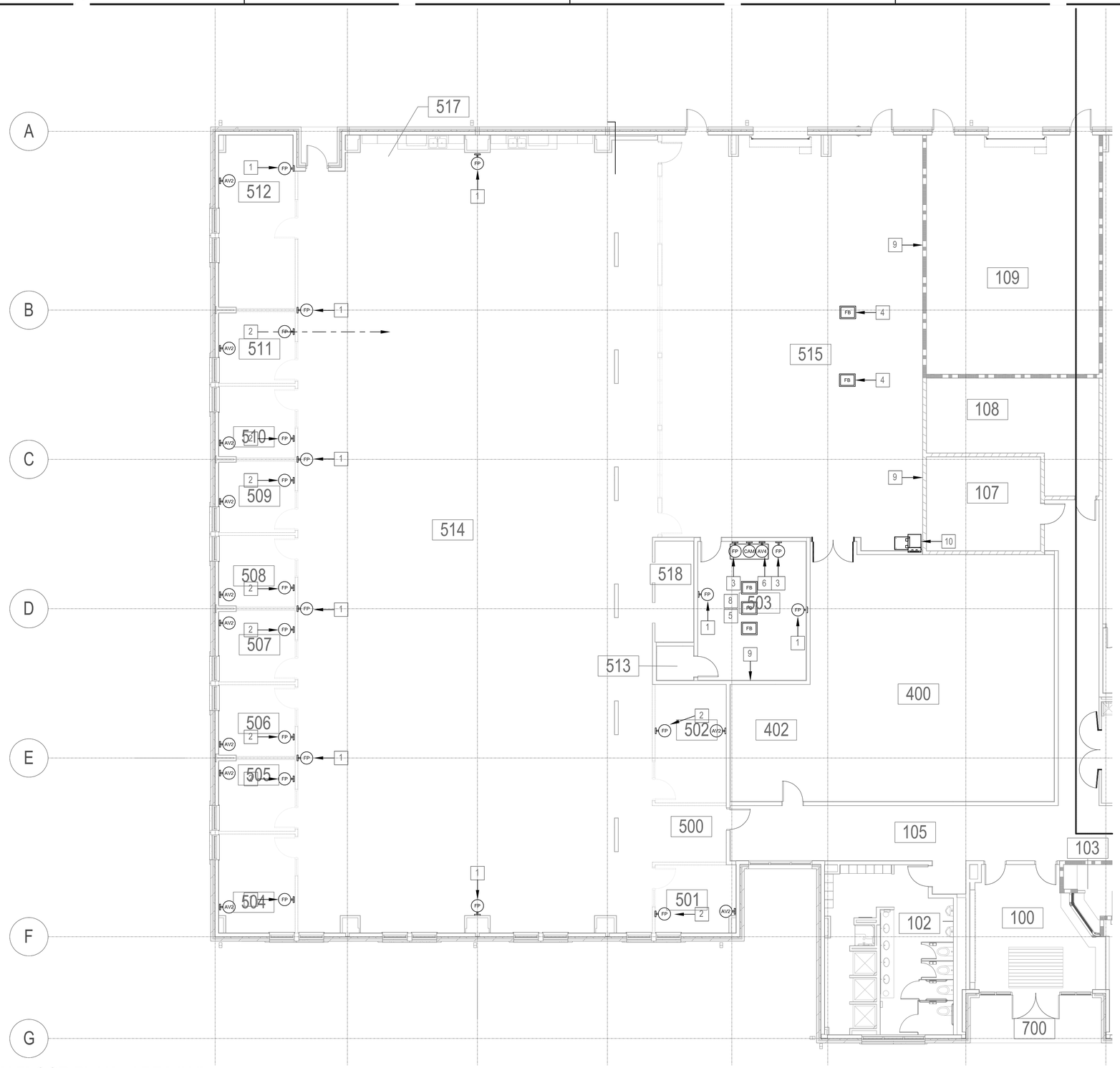

A1 AV FLOOR PLAN - AREA "A"

SCALE: 1/8" = 1'-0" (TA-101)

0' 4' 8' 16'

GENERAL NOTES

1. REVIEW ALL DRAWINGS AND SPECIFICATIONS FOR THE COMPLETE SCOPE OF WORK.NOTIFY ARCHITECT IMMEDIATELY FOR CLARIFICATION IF INCONSISTENCIES,CONTRADICTIONS OR OMISSIONS ARE DISCOVERED.DRAWINGS & SPECIFICATIONS ARECOMPLIMENTARY COMPONENTS OF THE CONTRACT DOCUMENTS.
2. DO NOT SCALE DRAWINGS, IF DIMENSIONAL INFORMATION IS REQUIRED & NOT FOUND,NOTIFY ARCHITECT IMMEDIATELY FOR CLARIFICATION. NOT ALL GRID LINES ARECENTER.
3. ALL DIMENSIONS ARE TO COLUMN CENTERLINES OR FACE OF FINISHED WALLS ORSURFACES UNLESS NOTED OTHERWISE.
4. ALL DOOR FRAMES ARE TO BE INSTALLED 4" AWAY OF ADJACENT PERPENDICULARWALLS UNLESS NOTED OTHERWISE.
5. REFER TO LIFE SAFETY DRAWINGS FOR ADDITIONAL FIRE / SMOKE RATINGREQUIREMENTS.
6. REFER TO INTERIOR FINISH DRAWINGS FOR ADDITIONAL INTERIOR FINISH SPECIFICINFORMATION.
7. REFER TO STRUCTURAL DRAWINGS FOR ADDITIONAL STRUCTURAL SPECIFICINFORMATION.
8. REFER TO MEP DRAWINGS FOR ADDITIONAL MEP SPECIFIC INFORMATION.
9. ALL INTERIOR PARTITIONS ARE TYPE "G" UNLESS NOTED OTHERWISE.
10. HIGHER FIRE RATED PARTITIONS TAKE PRECEDENCE OVER LOWER FIRE RATEDPARTITIONS AND ARE TO CONTINUE THROUGH ALL SUCH INTERSECTIONS.
11. OVERALL EXTERIOR DIMENSIONS TAKEN FROM OUTSIDE FACE OF BRICK VENEER ATWALL ABOVE WATER TABLE.
12. COORDINATE ALL REQUIRED CONDUIT, PIPING, AND CHASES FOR ALL GOVERNMENTFURNISHED, GOVERNMENT INSTALLED EQUIPMENT.

NEW WORK KEYNOTES

1	58" FLAT PANEL VIDEO DISPLAY CENTERED AT 72" AFF
2	32" FLAT PANEL VIDEO DISPLAY CENTERED AT 60" AFF
3	75" FLAT PANEL VIDEO DISPLAY CENTERED AT 66" AFF
4	FLOORBOX WITH KVM EXTENSION AND AUX AV CONNECTIONS
5	(3) FLOORBOXES: (1) NIPR/SIPR, (1) SIPR ONLY, (1) AV CABLING
6	AV CREDENZA WITH AV RACK AND GFE COMPUTERS
7	75" FLAT PANEL VIDEO DISPLAY CENTERED AT 66" AFF
8	CONFERENCE TABLE WITH 3 MICS, 2 TABLEBOXES, 1 TOUCHPANEL
9	CLARUS GLASSBOARD (DRY ERASE MARKER BOARD)
10	WALL-MOUNTED AV RACK WITH CONTROL PANEL ON 50' TETHER

LEGEND

DESCRIPTION	SYMBOL	DESCRIPTION	SYMBOL
32-75" FLAT PANEL 2 GANG OUTPUT PLATE	FP	FLOORBOX 4 GANG AV PLATE(S)	FB
2 GANG INPUT PLATE	AV2	TOUCHPANEL	TP
4 GANG IN/OUTPUT PLATE	AV4	2X2 CEILING MICROPHONE	M
CEILING SPEAKER	S	VTC CAMERA MOUNTS TO 2 GANG BOX	VTC
PROJECTOR	P	LOW VOLTAGE CONTROL FOR PROJECTION SCREEN	LVC
3X3 VIDEO WALL DISPLAY 2 GANG OUTPUT PLATE	LED		

KEY PLAN

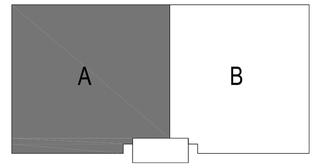

PLAN NORTH

SYM	DESCRIPTION	DATE	APPR

Certified Technology Specialist-Design
CTS-D
Paul Konikowski
#2219317
Expires:
2022/02/28

Command Systems Group
40900 MERCHANTS LN #204
LEONARDSTOWN, MD 20650

A/E INFO

APPROVED
FOR COMMANDER NAVFAC 7/10/2020

ACTIVITY
Approved by Emily Sylvester, Director of Installation Development Division

SATISFACTORY TO DATE 06/19/2020

DES	SM	DRW	PK	CHK	PL

PM/OM SQLR/MS
BRANCH MANAGER JAS
CHIEF ENG/ARCH EJA
FIRE PROTECTION

DEPARTMENT OF THE NAVY
NAVAL FACILITIES ENGINEERING COMMAND – MID-ATLANTIC
CAMP LEJEUNE - JACKSONVILLE, NC
MIDLANT CI CORE
MARSOC
JACKSONVILLE, NORTH CAROLINA
P1395 MARINE RAIDER HEADQUARTERS
AREA A AV FLOOR PLAN

SCALE: AS NOTED
EPROJECT NO.: 1603164
CONSTR. CONTR. NO.
NAVFAC DRAWING NO. 12794440
SHEET 221 OF 228

TA101

DRAWFORM REVISION: 17 APRIL 2018

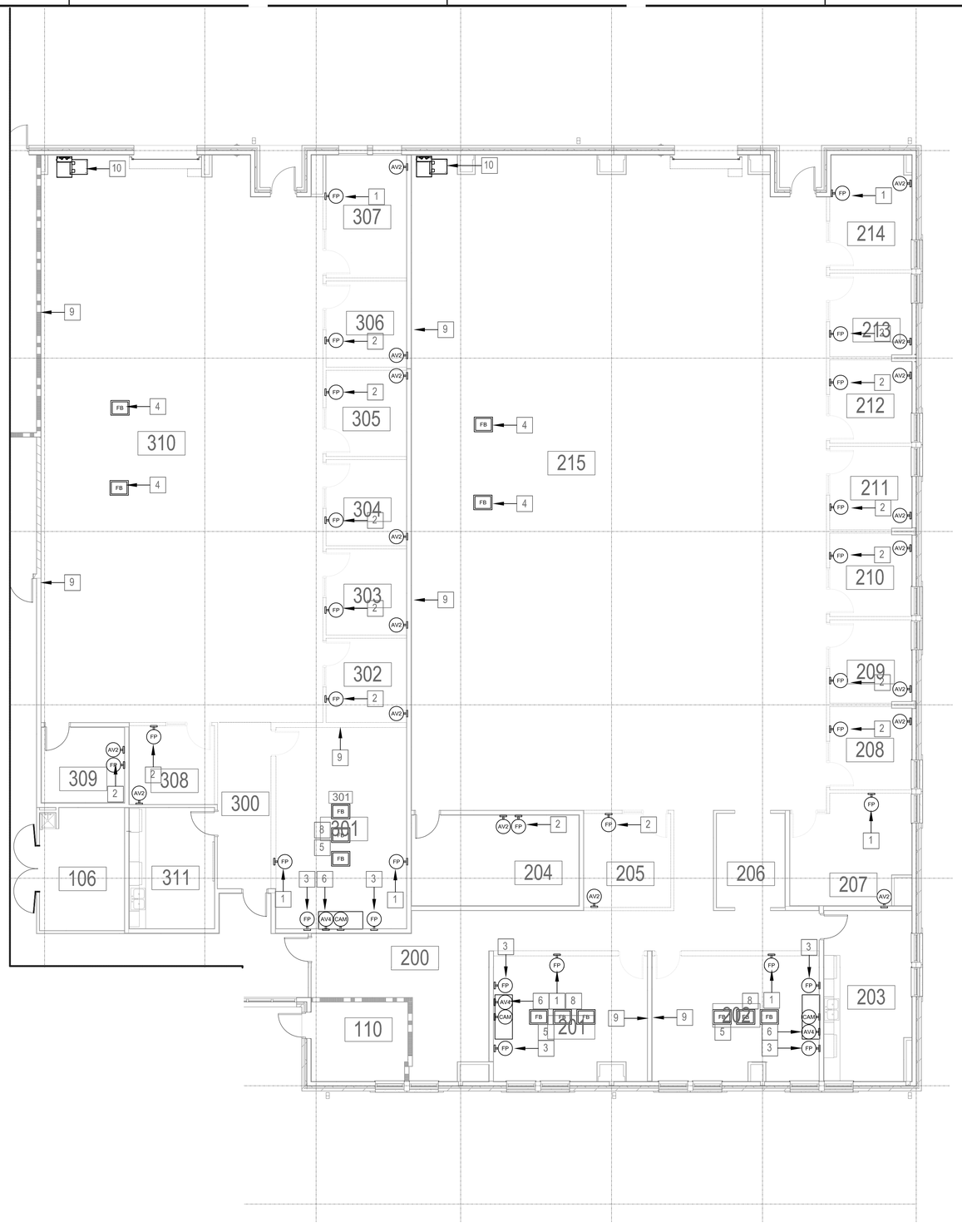

A1 AV FLOOR PLAN - AREA "B"

SCALE: 1/8" = 1'-0" (TA-102)

0' 4' 8' 16'

GENERAL NOTES

1. REVIEW ALL DRAWINGS AND SPECIFICATIONS FOR THE COMPLETE SCOPE OF WORK.NOTIFY ARCHITECT IMMEDIATELY FOR CLARIFICATION IF INCONSISTENCIES,CONTRADICTIONS OR OMISSIONS ARE DISCOVERED.DRAWINGS & SPECIFICATIONS ARECOMPLIMENTARY COMPONENTS OF THE CONTRACT DOCUMENTS.
2. DO NOT SCALE DRAWINGS, IF DIMENSIONAL INFORMATION IS REQUIRED & NOT FOUND,NOTIFY ARCHITECT IMMEDIATELY FOR CLARIFICATION. NOT ALL GRID LINES ARECENTER.
3. ALL DIMENSIONS ARE TO COLUMN CENTERLINES OR FACE OF FINISHED WALLS ORSURFACES UNLESS NOTED OTHERWISE.
4. ALL DOOR FRAMES ARE TO BE INSTALLED 4" AWAY OF ADJACENT PERPENDICULARWALLS UNLESS NOTED OTHERWISE.
5. REFER TO LIFE SAFETY DRAWINGS FOR ADDITIONAL FIRE / SMOKE RATINGREQUIREMENTS.
6. REFER TO INTERIOR FINISH DRAWINGS FOR ADDITIONAL INTERIOR FINISH SPECIFICINFORMATION.
7. REFER TO STRUCTURAL DRAWINGS FOR ADDITIONAL STRUCTURAL SPECIFICINFORMATION.
8. REFER TO MEP DRAWINGS FOR ADDITIONAL MEP SPECIFIC INFORMATION.
9. ALL INTERIOR PARTITIONS ARE TYPE "G" UNLESS NOTED OTHERWISE.
10. HIGHER FIRE RATED PARTITIONS TAKE PRECEDENCE OVER LOWER FIRE RATEDPARTITIONS AND ARE TO CONTINUE THROUGH ALL SUCH INTERSECTIONS.
11. OVERALL EXTERIOR DIMENSIONS TAKEN FROM OUTSIDE FACE OF BRICK VENEER ATWALL ABOVE WATER TABLE.
12. COORDINATE ALL REQUIRED CONDUIT, PIPING, AND CHASES FOR ALL GOVERNMENTFURNISHED, GOVERNMENT INSTALLED EQUIPMENT.

NEW WORK KEYNOTES

1	58" FLAT PANEL VIDEO DISPLAY CENTERED AT 72" AFF
2	32" FLAT PANEL VIDEO DISPLAY CENTERED AT 60" AFF
3	75" FLAT PANEL VIDEO DISPLAY CENTERED AT 66" AFF
4	FLOORBOX WITH KVM EXTENSION AND AUX AV CONNECTIONS
5	(3) FLOORBOXES: (1) NIPR/SIPR, (1) SIPR ONLY, (1) AV CABLING
6	AV CREDENZA WITH AV RACK AND GFE COMPUTERS
7	75" FLAT PANEL VIDEO DISPLAY CENTERED AT 66" AFF
8	CONFERENCE TABLE WITH 3 MICS, 2 TABLEBOXES, 1 TOUCHPANEL
9	CLARUS GLASSBOARD (DRY ERASE MARKER BOARD)
10	WALL-MOUNTED AV RACK WITH CONTROL PANEL ON 50' TETHER

LEGEND

DESCRIPTION	SYMBOL	DESCRIPTION	SYMBOL
32-75" FLAT PANEL 2 GANG OUTPUT PLATE	FP	FLOORBOX 4 GANG AV PLATE(S)	FB
2 GANG INPUT PLATE	AV2	TOUCHPANEL	TP
4 GANG IN/OUTPUT PLATE	AV4	2X2 CEILING MICROPHONE	M
CEILING SPEAKER	S	VTC CAMERA MOUNTS TO 2 GANG BOX	VTC
PROJECTOR	P	LOW VOLTAGE CONTROL FOR PROJECTION SCREEN	LVC
3X3 VIDEO WALL DISPLAY 2 GANG OUTPUT PLATE	LED		

KEY PLAN

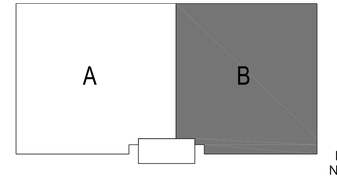

PLAN NORTH

SYM	DESCRIPTION	DATE	APPR

NAVFAC

CTS-D Certified Technology Specialist-Design Paul Konikowski #2219917 Expires: 2022/02/28 AVIXA

Command Systems Group
40900 MERCHANTS LN #204
LEONARDSTOWN, MD 20650

A/E INFO

APPROVED
FOR COMMANDER NAVFAC 7/16/2020
ACTIVITY
Approved by Emily Sylvester, Director of Installation Development Division
SATISFACTORY TO DATE 06/19/2020

DES	SM	DRW	PK	CHK	PL

PM/DM SGL/RMS
BRANCH MANAGER JAS
CHIEF ENG/ARCH EJA
FIRE PROTECTION

DEPARTMENT OF THE NAVY
NAVAL FACILITIES ENGINEERING COMMAND
MIDLANT CI CORE
NAVAL FACILITIES ENGINEERING COMMAND ~ MID-ATLANTIC
CAMP LEJEUNE - JACKSONVILLE, NC
MARSOC
JACKSONVILLE, NORTH CAROLINA
P1395 MARINE RAIDER HEADQUARTERS
AREA B AV FLOOR PLAN

SCALE: AS NOTED
EPROJECT NO.: 1603164
CONSTR. CONTR. NO.
NAVFAC DRAWING NO. 12794441
SHEET 222 OF 228

TA102

DRAWFORM REVISION: 17 APRIL 2018

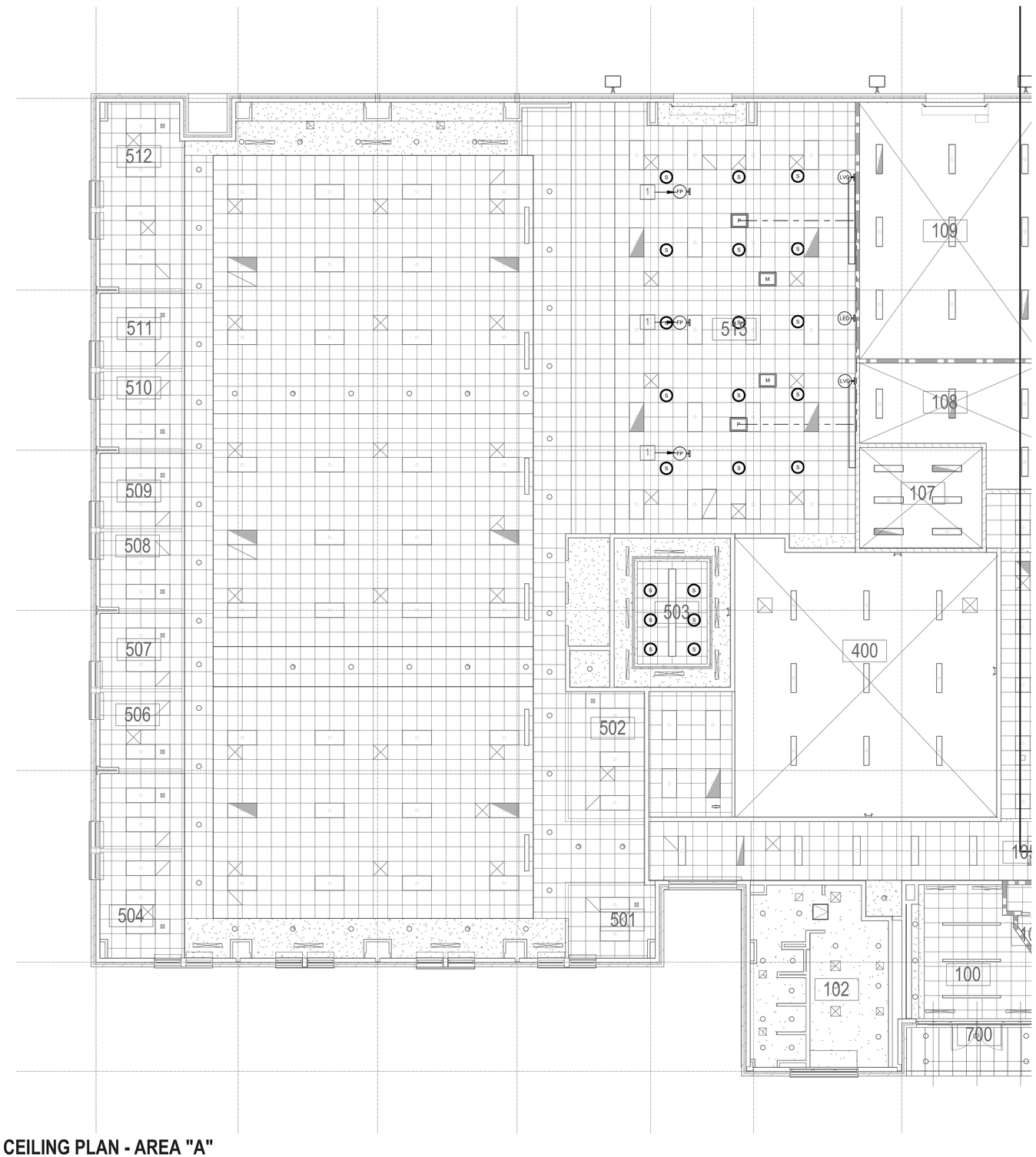

A1 AV REFLECTED CEILING PLAN - AREA "A"

SCALE: 1/8" = 1'-0" (TA-201)

0' 4' 8' 16'

GENERAL NOTES

1. REVIEW ALL DRAWINGS AND SPECIFICATIONS FOR THE COMPLETE SCOPE OF WORK.NOTIFY ARCHITECT IMMEDIATELY FOR CLARIFICATION IF INCONSISTENCIES,CONTRADICTIONS OR OMISSIONS ARE DISCOVERED.DRAWINGS & SPECIFICATIONS ARECOMPLIMENTARY COMPONENTS OF THE CONTRACT DOCUMENTS.
2. DO NOT SCALE DRAWINGS, IF DIMENSIONAL INFORMATION IS REQUIRED & NOT FOUND,NOTIFY ARCHITECT IMMEDIATELY FOR CLARIFICATION. NOT ALL GRID LINES ARECENTER.
3. ALL DIMENSIONS ARE TO COLUMN CENTERLINES OR FACE OF FINISHED WALLS ORSURFACES UNLESS NOTED OTHERWISE.
4. ALL DOOR FRAMES ARE TO BE INSTALLED 4" AWAY OF ADJACENT PERPENDICULARWALLS UNLESS NOTED OTHERWISE.
5. REFER TO LIFE SAFETY DRAWINGS FOR ADDITIONAL FIRE / SMOKE RATINGREQUIREMENTS.
6. REFER TO INTERIOR FINISH DRAWINGS FOR ADDITIONAL INTERIOR FINISH SPECIFICINFORMATION.
7. REFER TO STRUCTURAL DRAWINGS FOR ADDITIONAL STRUCTURAL SPECIFICINFORMATION.
8. REFER TO MEP DRAWINGS FOR ADDITIONAL MEP SPECIFIC INFORMATION.
9. ALL INTERIOR PARTITIONS ARE TYPE "G" UNLESS NOTED OTHERWISE.
10. HIGHER FIRE RATED PARTITIONS TAKE PRECEDENCE OVER LOWER FIRE RATEDPARTITIONS AND ARE TO CONTINUE THROUGH ALL SUCH INTERSECTIONS.
11. OVERALL EXTERIOR DIMENSIONS TAKEN FROM OUTSIDE FACE OF BRICK VENEER ATWALL ABOVE WATER TABLE.
12. COORDINATE ALL REQUIRED CONDUIT, PIPING, AND CHASES FOR ALL GOVERNMENTFURNISHED, GOVERNMENT INSTALLED EQUIPMENT.

NEW WORK KEYNOTES

1	58" FLAT PANEL VIDEO DISPLAY CENTERED AT 72" AFF

LEGEND

DESCRIPTION	SYMBOL	DESCRIPTION	SYMBOL
32-75" FLAT PANEL 2 GANG OUTPUT PLATE	FP	FLOORBOX 4 GANG AV PLATE(S)	FB
2 GANG INPUT PLATE	AV2	TOUCHPANEL	TP
4 GANG IN/OUTPUT PLATE	AV4	2X2 CEILING MICROPHONE	M
CEILING SPEAKER	S	VTC CAMERA MOUNTS TO 2 GANG BOX	VTC
PROJECTOR	P	LOW VOLTAGE CONTROL FOR PROJECTION SCREEN	LVC
3X3 VIDEO WALL DISPLAY 2 GANG OUTPUT PLATE	LED		

KEY PLAN

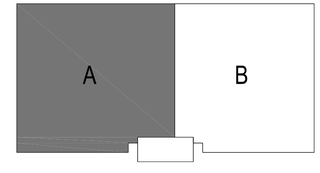

PLAN NORTH

SYM	DESCRIPTION	DATE	APPR

Certified Technology Specialist-Design CTS-D Paul Konikowski #2219317 Expires: 2022/02/28

Command Systems Group
40900 MERCHANTS LN #204
LEONARDSTOWN, MD 20650

A/E INFO

APPROVED
FOR COMMANDER NAVFAC 7/16/2020
ACTIVITY
Approved by Emily Sylvester, Director of Installation Development Division
SATISFACTORY TO DATE 06/19/2020

DES	SM	DRW	PK	CHK	PL
PM/DM	SGL/RMS				
BRANCH MANAGER	JAS				
CHIEF ENGARCH	EJA				
FIRE PROTECTION					

DEPARTMENT OF THE NAVY
NAVAL FACILITIES ENGINEERING COMMAND
MIDLANT CI CORE

NAVAL FACILITIES ENGINEERING COMMAND ~ MID-ATLANTIC
CAMP LEJEUNE - JACKSONVILLE, NC

MARSOC

JACKSONVILLE, NORTH CAROLINA

P1395 MARINE RAIDER HEADQUARTERS

AREA A AV REFLECTED CEILING PLAN

SCALE: AS NOTED
EPROJECT NO.: 1603164
CONSTR. CONTR. NO.
NAVFAC DRAWING NO. 12794442
SHEET 223 OF 228

TA201

DRAWFORM REVISION: 17 APRIL 2018

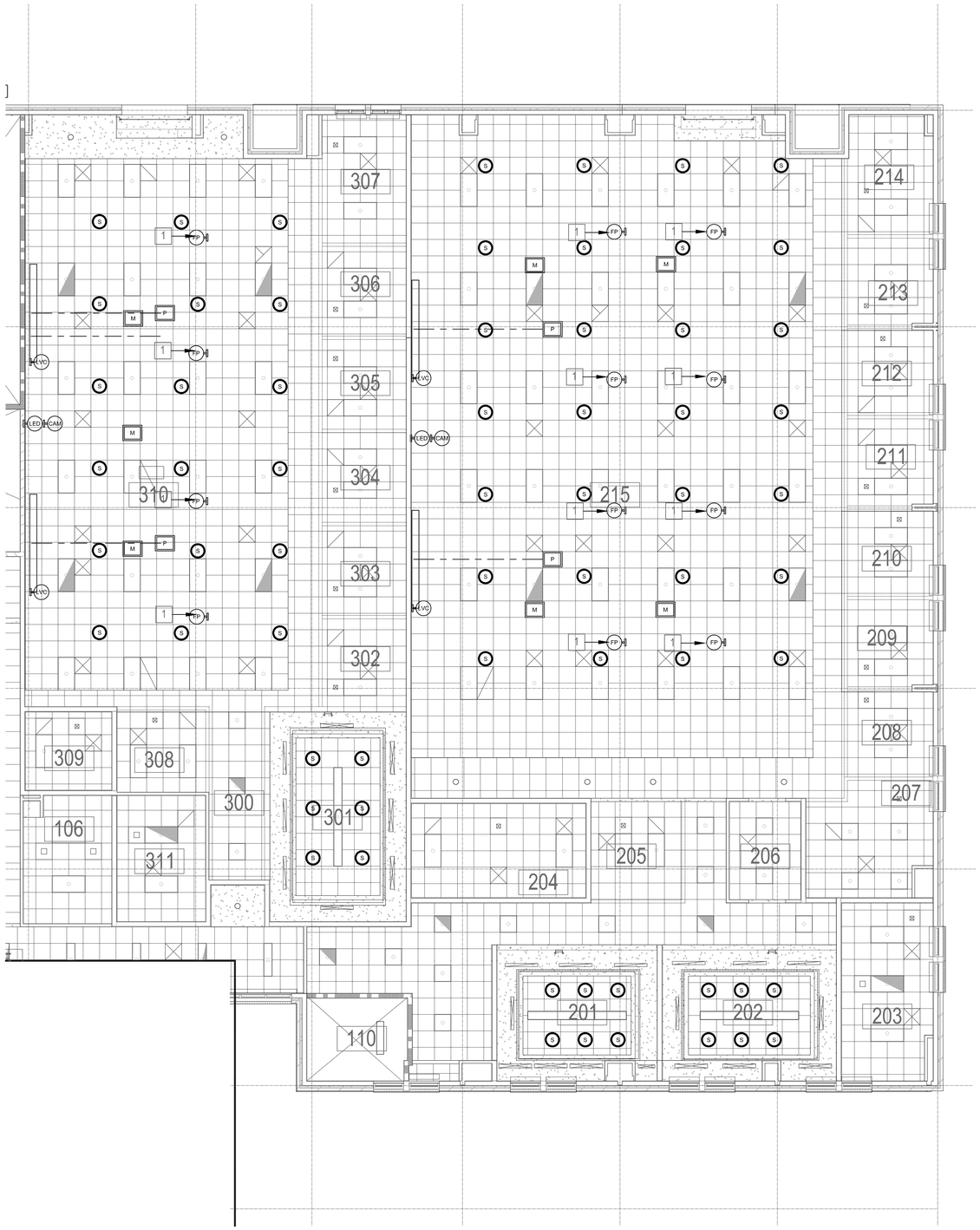

A1 AV REFLECTED CEILING PLAN - AREA "B"

SCALE: 1/8" = 1'-0" (TA-202)

0' 4' 8' 16'

GENERAL NOTES

1. REVIEW ALL DRAWINGS AND SPECIFICATIONS FOR THE COMPLETE SCOPE OF WORK.NOTIFY ARCHITECT IMMEDIATELY FOR CLARIFICATION IF INCONSISTENCIES,CONTRADICTIONS OR OMISSIONS ARE DISCOVERED.DRAWINGS & SPECIFICATIONS ARECOMPLIMENTARY COMPONENTS OF THE CONTRACT DOCUMENTS.
2. DO NOT SCALE DRAWINGS, IF DIMENSIONAL INFORMATION IS REQUIRED & NOT FOUND,NOTIFY ARCHITECT IMMEDIATELY FOR CLARIFICATION. NOT ALL GRID LINES ARECENTER.
3. ALL DIMENSIONS ARE TO COLUMN CENTERLINES OR FACE OF FINISHED WALLS ORSURFACES UNLESS NOTED OTHERWISE.
4. ALL DOOR FRAMES ARE TO BE INSTALLED 4" AWAY OF ADJACENT PERPENDICULARWALLS UNLESS NOTED OTHERWISE.
5. REFER TO LIFE SAFETY DRAWINGS FOR ADDITIONAL FIRE / SMOKE RATINGREQUIREMENTS.
6. REFER TO INTERIOR FINISH DRAWINGS FOR ADDITIONAL INTERIOR FINISH SPECIFICINFORMATION.
7. REFER TO STRUCTURAL DRAWINGS FOR ADDITIONAL STRUCTURAL SPECIFICINFORMATION.
8. REFER TO MEP DRAWINGS FOR ADDITIONAL MEP SPECIFIC INFORMATION.
9. ALL INTERIOR PARTITIONS ARE TYPE "G" UNLESS NOTED OTHERWISE.
10. HIGHER FIRE RATED PARTITIONS TAKE PRECEDENCE OVER LOWER FIRE RATEDPARTITIONS AND ARE TO CONTINUE THROUGH ALL SUCH INTERSECTIONS.
11. OVERALL EXTERIOR DIMENSIONS TAKEN FROM OUTSIDE FACE OF BRICK VENEER ATWALL ABOVE WATER TABLE.
12. COORDINATE ALL REQUIRED CONDUIT, PIPING, AND CHASES FOR ALL GOVERNMENTFURNISHED, GOVERNMENT INSTALLED EQUIPMENT.

NEW WORK KEYNOTES

1	58" FLAT PANEL VIDEO DISPLAY CENTERED AT 72" AFF
2	32" FLAT PANEL VIDEO DISPLAY CENTERED AT 60" AFF
3	75" FLAT PANEL VIDEO DISPLAY CENTERED AT 66" AFF
4	FLOORBOX WITH KVM EXTENSION AND AUX AV CONNECTIONS
5	(3) FLOORBOXES: (1) NIPR/SIPR, (1) SIPR ONLY, (1) AV CABLING
6	AV CREDENZA WITH AV RACK AND GFE COMPUTERS
7	75" FLAT PANEL VIDEO DISPLAY CENTERED AT 66" AFF
8	CONFERENCE TABLE WITH 3 MICS, 2 TABLEBOXES, 1 TOUCHPANEL
9	CLARUS GLASSBOARD (DRY ERASE MARKER BOARD)
10	WALL-MOUNTED AV RACK WITH CONTROL PANEL ON 50' TETHER

LEGEND

DESCRIPTION	SYMBOL	DESCRIPTION	SYMBOL
32-75" FLAT PANEL 2 GANG OUTPUT PLATE	FP	FLOORBOX 4 GANG AV PLATE(S)	FB
2 GANG INPUT PLATE	AV2	TOUCHPANEL	TP
4 GANG IN/OUTPUT PLATE	AV4	2X2 CEILING MICROPHONE	M
CEILING SPEAKER	S	VTC CAMERA MOUNTS TO 2 GANG BOX	VTC
PROJECTOR	P	LOW VOLTAGE CONTROL FOR PROJECTION SCREEN	LVC
3X3 VIDEO WALL DISPLAY 2 GANG OUTPUT PLATE	LED		

KEY PLAN

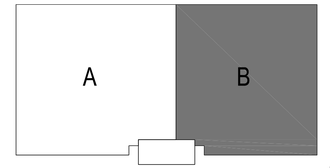

SYM	DESCRIPTION	DATE	APPR

NAVFAC

CTS-D Certified Technology Specialist Design
Paul Konikowski
#2219917
Expires: 2022/02/28

Command Systems Group
40900 MERCHANTS LN #204
LEONARDSTOWN, MD 20650

A/E INFO

APPROVED
FOR COMMANDER NAVFAC 7/10/2020

ACTIVITY
Approved by Emily Sylvester, Director of Installation Development Division
SATISFACTORY TO DATE 06/19/2020

DES	SM	DRW	PK	CHK	PL

PM/OM SQ/RMS
BRANCH MANAGER JAS
CHIEF ENG/ARCH EJA
FIRE PROTECTION

DEPARTMENT OF THE NAVY
NAVAL FACILITIES ENGINEERING COMMAND
MIDLANT CI CORE
MARSOC
NAVAL FACILITIES ENGINEERING COMMAND ~ MID-ATLANTIC
CAMP LEJEUNE - JACKSONVILLE, NC
JACKSONVILLE, NORTH CAROLINA
P1395 MARINE RAIDER HEADQUARTERS
AREA B AV REFLECTED CEILING PLAN

SCALE: AS NOTED
EPROJECT NO.: 1603164
CONSTR. CONTR. NO.
NAVFAC DRAWING NO. 12794443
SHEET 224 OF 228

TA202

DRAWFORM REVISION: 17 APRIL 2018

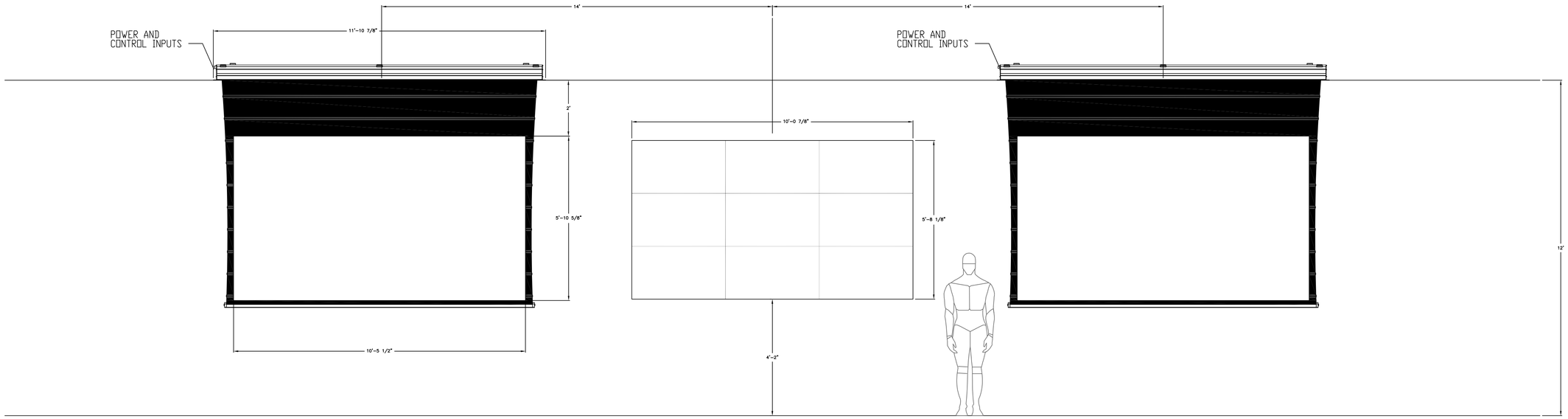

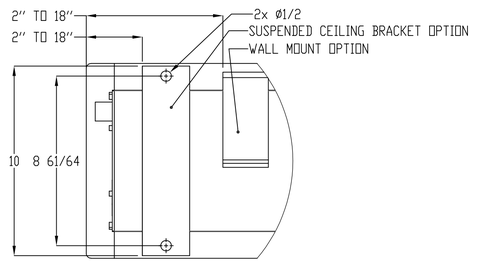

DETAIL A
SCALE 1 : 4

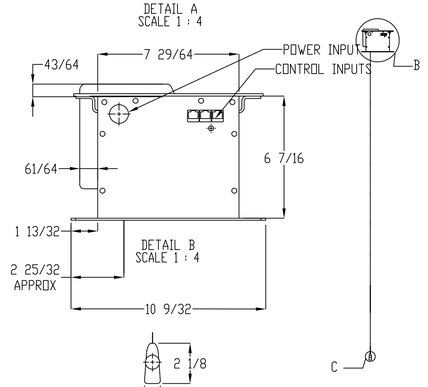

DETAIL B
SCALE 1 : 4

DETAIL C
SCALE 1 : 4

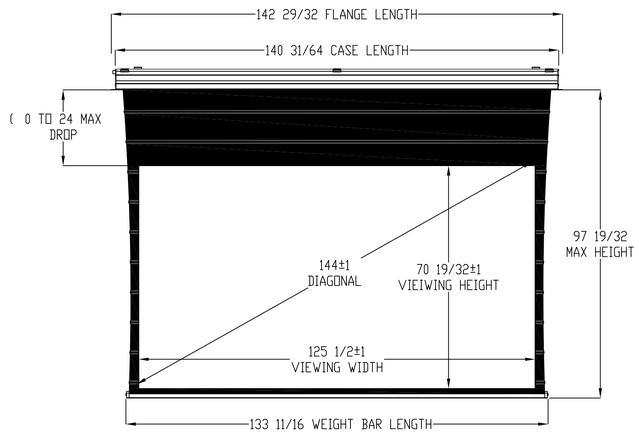

A1 OPS AREAS DISPLAY WALL ELEVATION

SCALE: 1/2" = 1'-0" (TA-400)

SYM	DESCRIPTION	DATE	APPR

NAVFAC

CTS-D Certified Technology Specialist-Design
Paul Konikowski
#2219917
Expires:
2022/02/28

Command Systems Group
40900 MERCHANTS LN #204
LEONARDSTOWN, MD 20650

A/E INFO

APPROVED
FOR COMMANDER NAVFAC 7/10/2020
ACTIVITY
Approved by Emily Sylvester, Director of Installation Development Division
SATISFACTORY TO DATE 06/19/2020

DES	SM	DRW	PK	CHK	PL
PM/OM	SG/RMS				
BRANCH MANAGER	JAS				
CHIEF ENG/ARCH	EJA				
FIRE PROTECTION					

DEPARTMENT OF THE NAVY
NAVAL FACILITIES ENGINEERING COMMAND – MID-ATLANTIC
NAVAL FACILITIES ENGINEERING COMMAND MIDLANT CI CORE
CAMP LEJEUNE - JACKSONVILLE, NC
MARSOC
JACKSONVILLE, NORTH CAROLINA
P1395 MARINE RAIDER HEADQUARTERS
OPS AREAS DISPLAY WALL ELEVATION

SCALE: AS NOTED
EPROJECT NO.: 1603164
CONSTR. CONTR. NO.
NAVFAC DRAWING NO. 12794444
SHEET 225 OF 228

TA400

DRAWFORM REVISION: 17 APRIL 2018

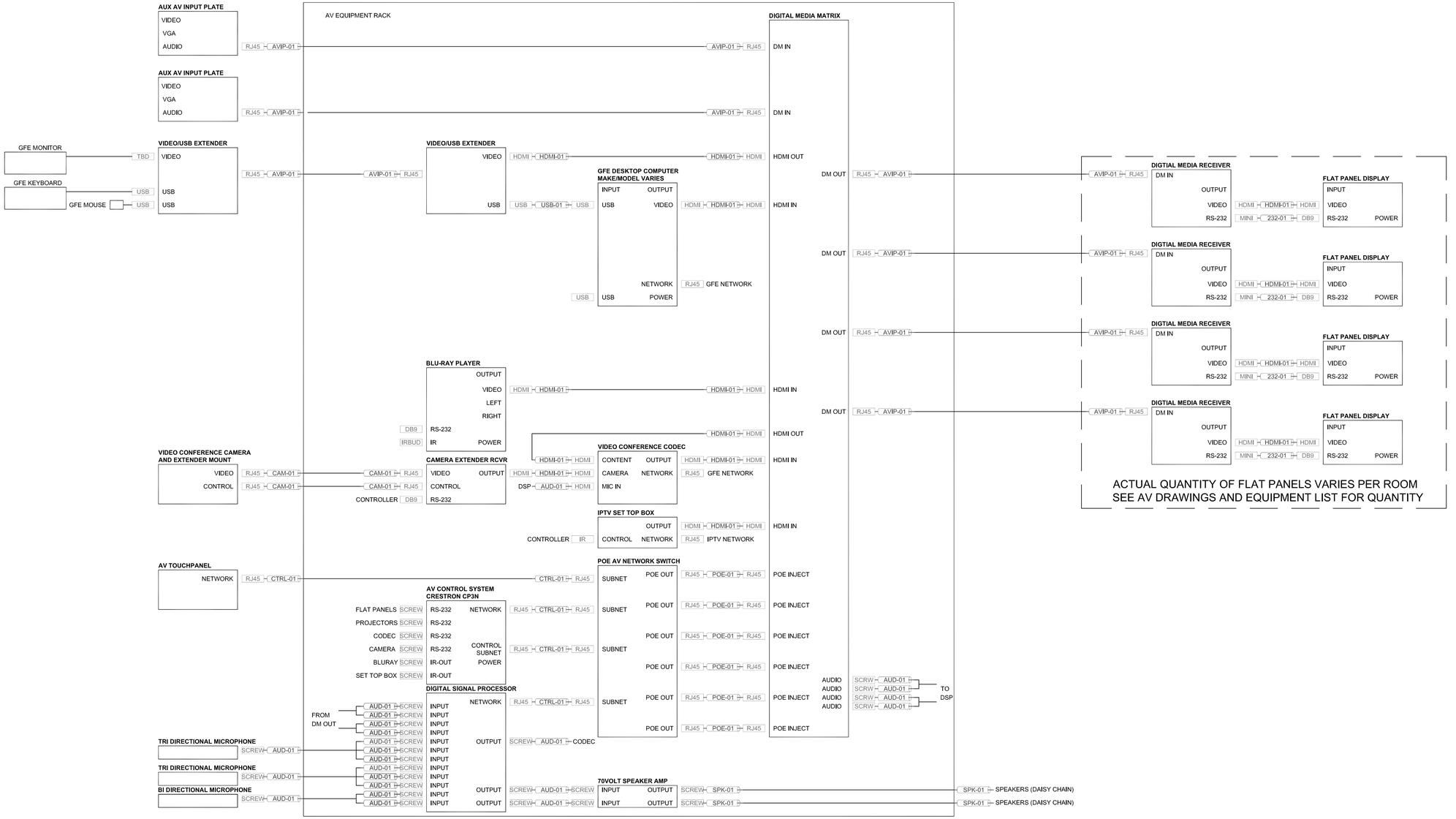

A1 CONFERENCE ROOMS SIGNAL FLOW LINE DIAGRAM

SCALE: NTS (TA-500)

SYM	DESCRIPTION	DATE	APPR

NAVFAC

CTS-D Certified Technology Specialist-Design
Paul Konikowski
#2219317
Expires:
2022/02/28

Command Systems Group
40900 MERCHANTS LN #204
LEONARDSTOWN, MD 20650

A/E INFO

APPROVED
FOR COMMANDER NAVFAC 7/10/2020

ACTIVITY
Approved by Emily Sylvester, Director of Installation Development Division

SATISFACTORY TO DATE 06/19/2020

DES	SM	DRW	PK	CHK	PL

PM/DM SQLR/MS
BRANCH MANAGER JAS
CHIEF ENG/ARCH EJA
FIRE PROTECTION

DEPARTMENT OF THE NAVY
NAVAL FACILITIES ENGINEERING COMMAND
MIDLANT CI CORE

NAVAL FACILITIES ENGINEERING COMMAND – MID-ATLANTIC
CAMP LEJEUNE - JACKSONVILLE, NC

MARSOC

JACKSONVILLE, NORTH CAROLINA

P1395 MARINE RAIDER HEADQUARTERS

CONFERENCE ROOMS SIGNAL FLOW LINE DIAGRAM

SCALE: AS NOTED
EPROJECT NO.: 1603164
CONSTR. CONTR. NO.
NAVFAC DRAWING NO. 12794445
SHEET 226 OF 228

TA500

DRAWFORM REVISION: 17 APRIL 2018

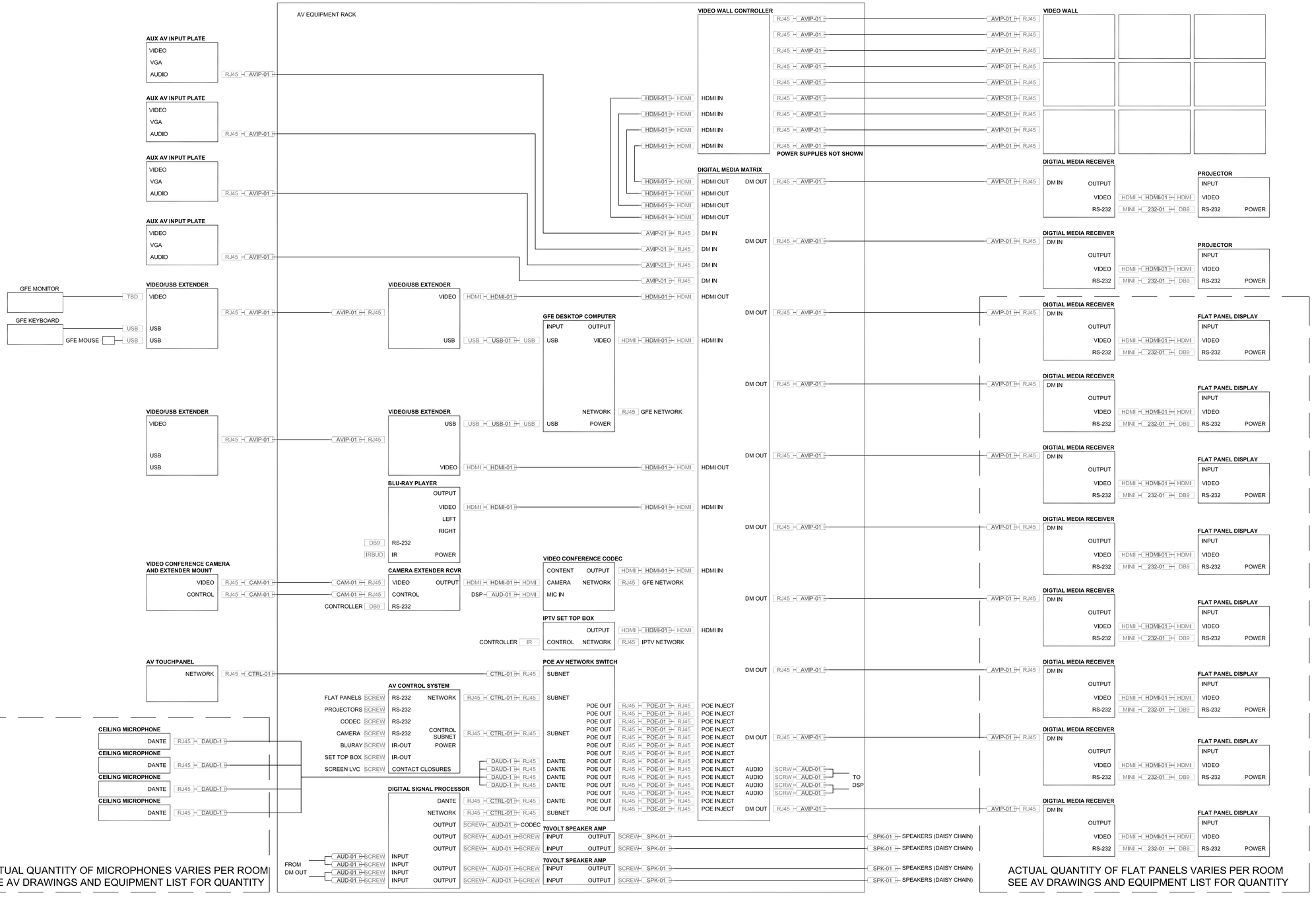

A1 OPS ROOMS SIGNAL FLOW LINE DIAGRAM

SCALE: NTS (TA-501)

CTS-D Certified Technology Specialist-Design
Paul Konikowski
#2219917
Expires: 2022/02/28

Command Systems Group
40900 MERCHANTS LN #204
LEONARDSTOWN, MD 20650

A/E INFO

APPROVED

FOR COMMANDER NAVFAC

ACTIVITY

Approved by Emily Sylvester, Director of Installation Development Division

SATISFACTORY TO DATE 06/19/2020

DES	SM	DRW	PK	CHK	PL

PM/DM SGURMS

BRANCH MANAGER JAS

CHIEF ENGR/ARCH EJA

FIRE PROTECTION

DEPARTMENT OF THE NAVY
NAVAL FACILITIES ENGINEERING COMMAND
MIDLANT CI CCRE
MARSOC
NAVAL FACILITIES ENGINEERING COMMAND ~ MID-ATLANTIC
CAMP LEJEUNE ~ JACKSONVILLE, NC
JACKSONVILLE, NORTH CAROLINA
P1395 MARINE RAIDER HEADQUARTERS
OPS ROOMS SIGNAL FLOW LINE DIAGRAM

SCALE: AS NOTED

EPROJECT NO.: 1603164

CONSTR. CONTR. NO.

NAVFAC DRAWING NO.
12794446

SHEET 227 OF 228

TA501

DRAWFORM REVISION: 17 APRIL 2018

SYM	DESCRIPTION	DATE	APPR

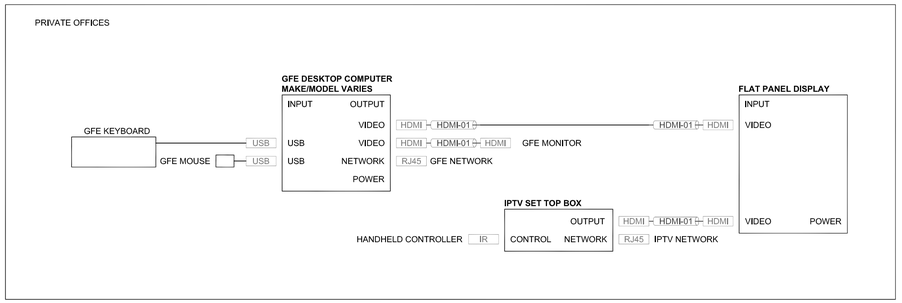

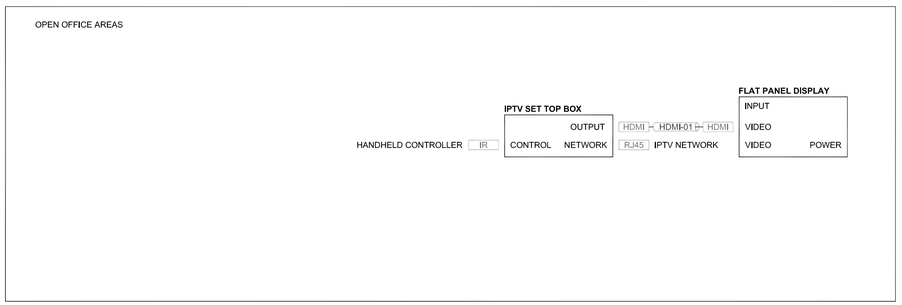

A1 OFFICE / OPEN AREAS SIGNAL FLOW LINE DIAGRAM

SCALE: NTS (TA-502)

SYM	DESCRIPTION	DATE	APPR

NAVFAC

CTS-D Certified Technology Specialist-Design
Paul Konikowski
#2219917
Expires:
2022/02/28

Command Systems Group
40900 MERCHANTS LN #204
LEONARDSTOWN, MD 20650

A/E INFO

APPROVED
FOR COMMANDER NAVFAC 7/16/2020
ACTIVITY
Approved by Emily Sylvester, Director of Installation Development Division
SATISFACTORY TO DATE 06/19/2020

DES	SM	DRW	PK	CHK	PL
PM/DM	SGL/RMS				
BRANCH MANAGER	JAS				
CHIEF ENGR/CH	EJA				
FIRE PROTECTION					

DEPARTMENT OF THE NAVY
NAVAL FACILITIES ENGINEERING COMMAND
MIDLANT CI CORE

NAVAL FACILITIES ENGINEERING COMMAND ~ MID-ATLANTIC
CAMP LEJEUNE - JACKSONVILLE, NC

MARSOC

JACKSONVILLE, NORTH CAROLINA

P1395 MARINE RAIDER HEADQUARTERS

OPS ROOMS SIGNAL FLOW LINE DIAGRAM

SCALE: AS NOTED
EPROJECT NO.: 1603164
CONSTR. CONTR. NO.
NAVFAC DRAWING NO. 12794447
SHEET 228 OF 228

TA502

DRAWFORM REVISION: 17 APRIL 2018